Define 6 – Quality Function Deployment (QFD)

Also known as the house of quality

Process of QFD

Quality Function Deployment (QFD) is a process for listening to customers voices and responding to their needs.

It aims to prioritise their needs and define relationships to engineering functions and specifications. It is also used to compare against competitor products

It ensures that the VoC is not forgotten during design and implementation phases

Process of QFD

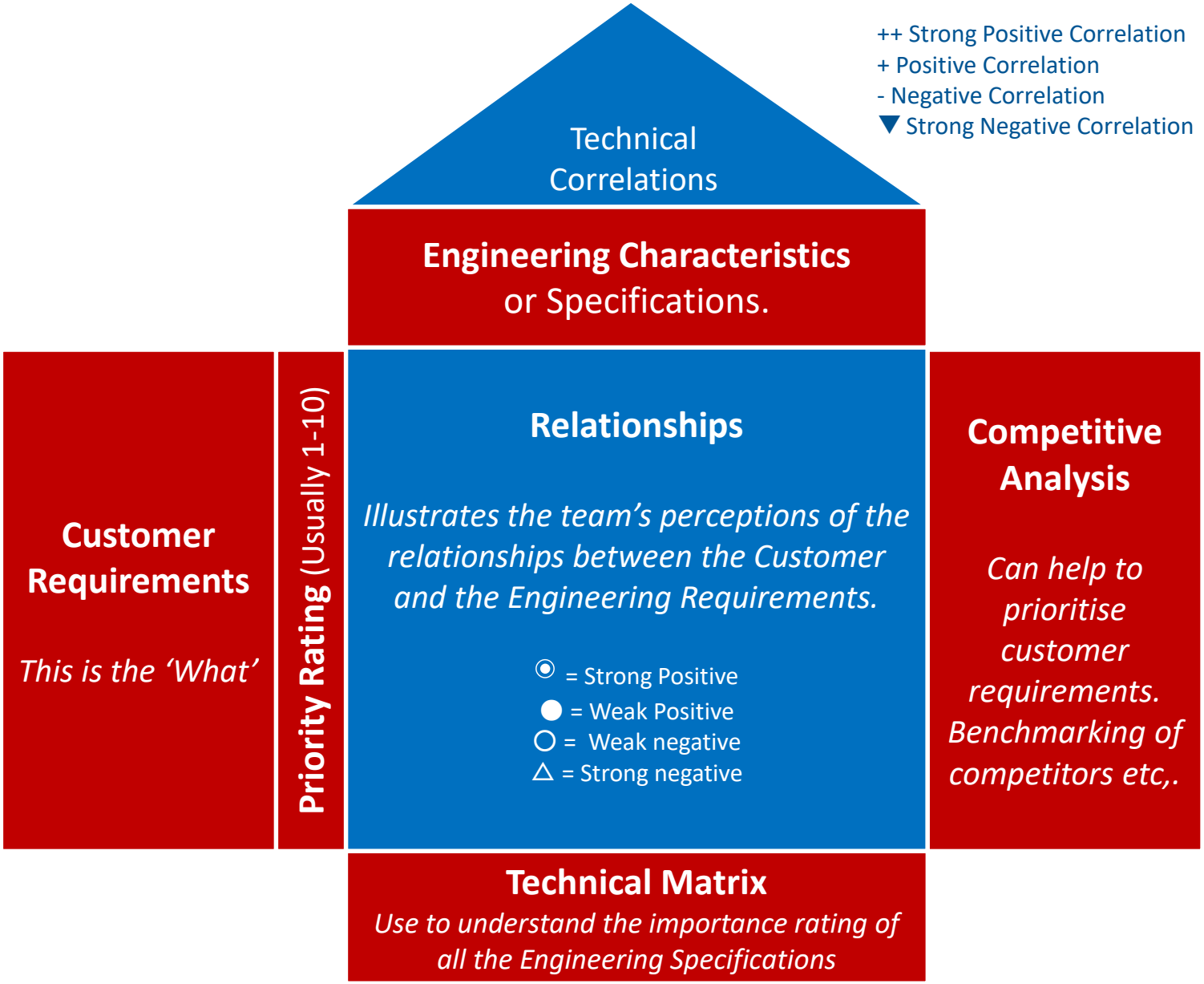

QFD Example

Drawing Pins

QFD Example

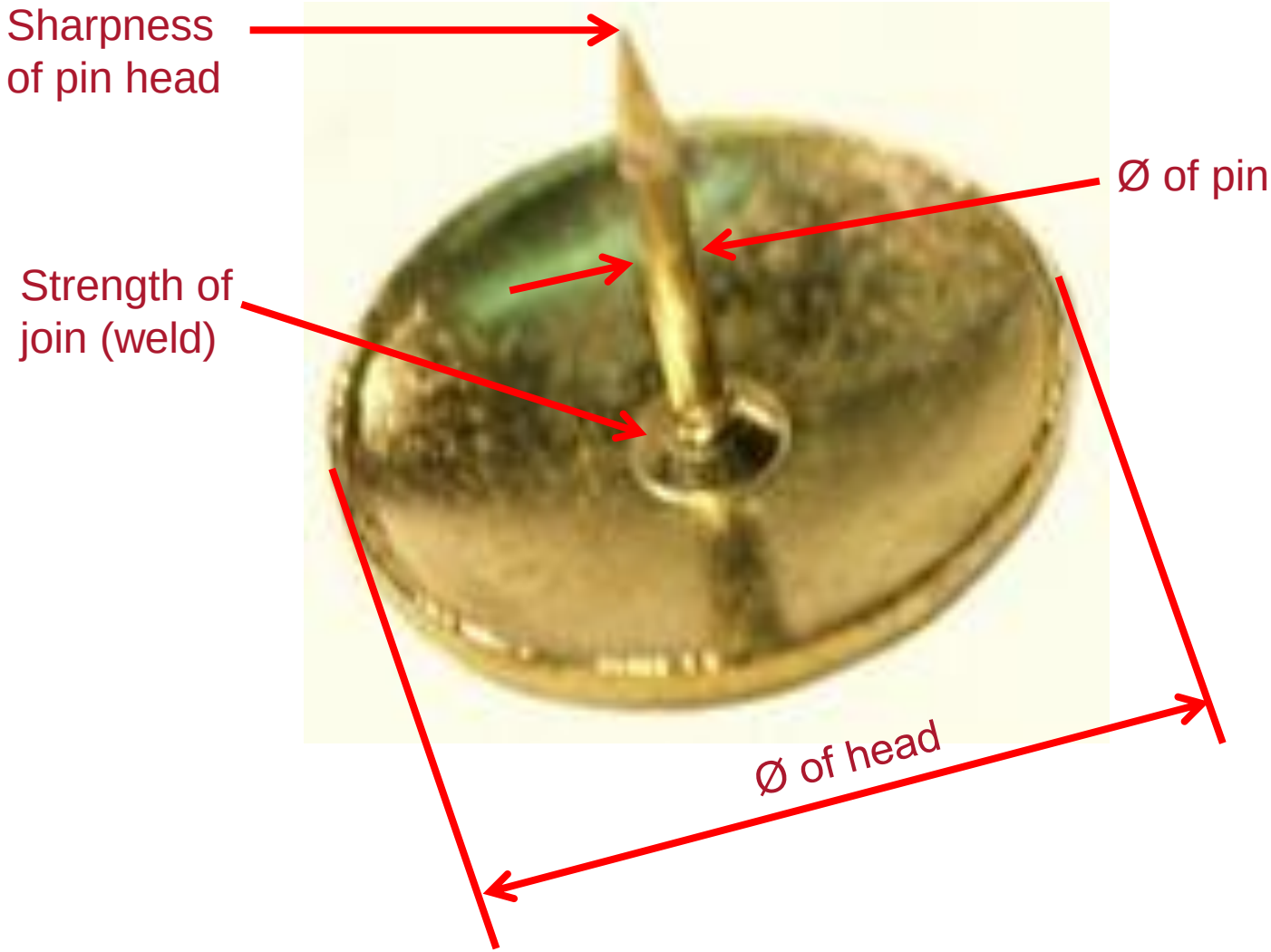

QFD Example – Completed (to a point.)

◉ = Strong Positive
● = Weak Positive
○ = Weak negative
△ = Strong negative

		Design Requirements			
		Diameter of Head	Diameter of Pin	Strength of Pin	Sharpness of Pin
Customer Requirements	Easy to push into Board	●	○		◉
	Pin does not bend		●	◉	
	Low price	△	○		○

Process of QFD

- List customer requirements in LH box and prioritise
- Horizontally above relationship matrix list design requirements
- Evaluate the relationship between customer requirements and engineering/design requirements – strong positive, weak positive, weak negative, strong negative
- The roof shows any correlation between different engineering and design requirements
- Add competitor research in RH box

QFD Exercise – Mobile Phone Development

QFD Exercise – Mobile Phone Development

	Customer requirements	Customer Priority rating (1-10)
1	Have a good camera	5
2	Should have battery stand-by charge of 96 hours	4
3	Should be light weight	2
4	Should be easy to use	3
5	Should be cheap	4
6	Big screen	3
7	Reliable	3
8	Size not too big	1

QFD Exercise – Mobile Phone Development

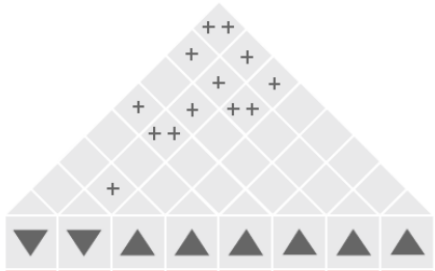

	Customer importance rating (1 = low, 5 = high)	Percent of customer importance rating	Weight	Cost of production	Expected life	Operating system	Camera piece	Speaker	Battery	Glass	Competitor research			
											Tristell	Vital	Stub Plus	Story Phone
Size	1	4%	●	●	△		△	△		○	3	2	1	5
Lightweight	2	8%	○							●	2	2	1	4
Easy to use	3	12%		○		●	△				5	2	3	2
Reliable	3	12%		●	●	○		○	●	○	2	3	5	1
Cheap	4	16%	△	●	●	○	△	△	○	○	2	5	4	3
Big screen	3	12%	△	△	△	○				●	1	1	3	1
Long lasting battery	4	16%	△	○	●	●			●		2	5	3	3
High quality camera	5	20%		●		○	●	○			5	3	2	4

QFD Exercise – Tape Measure Development

QFD Exercise – Tape Measure Development

- You are employed within a company which would like to expand their product range by designing and developing a tape measure
- A target/focus group has been questioned and 7 key customer requirements have been identified.
- Conduct a QFD exercise based on the information available and making appropriate assumptions where necessary.

- You will need to identify suitable design requirements
- Use the 4 steps and to structure the process

QFD Exercise – Tape Measure Development

	Customer requirements	Customer Priority rating (1-10)
1	Is able to take long measurements	7
2	Should be easy to read measurements	8
3	Should be easy to start/stop the tape from retracting	3
4	Should be low cost	6
5	Should be light weight	2
6	Should be robust (resistant to impact)	5
7	Tape should have a long ‘stand out’	5

QFD Exercise – Tape Measure Development

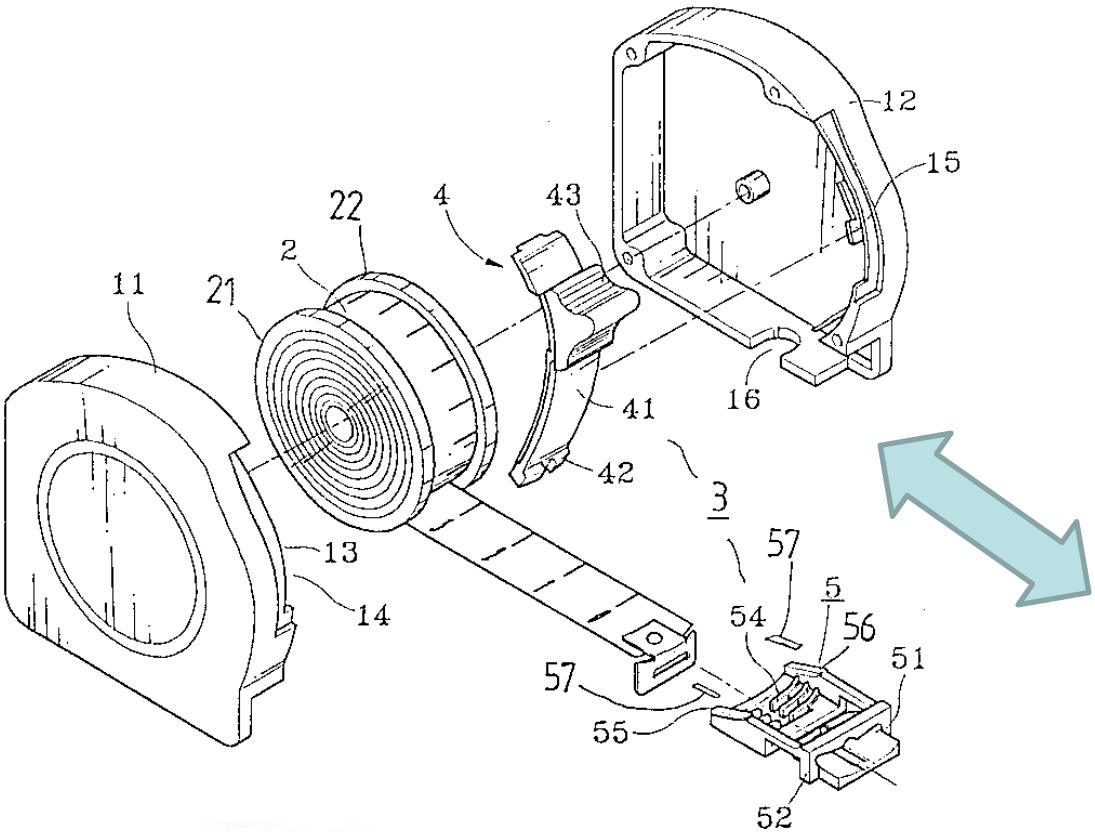

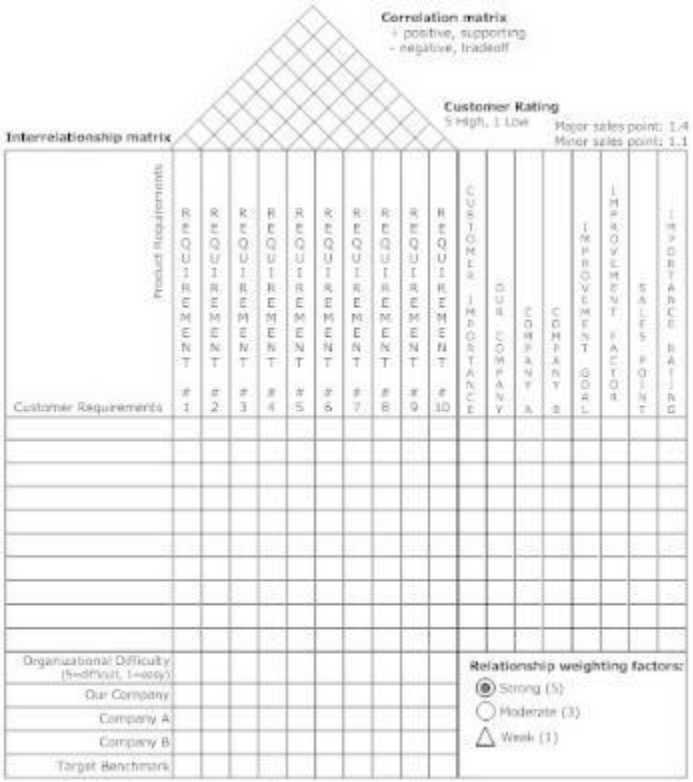

Process of QFD

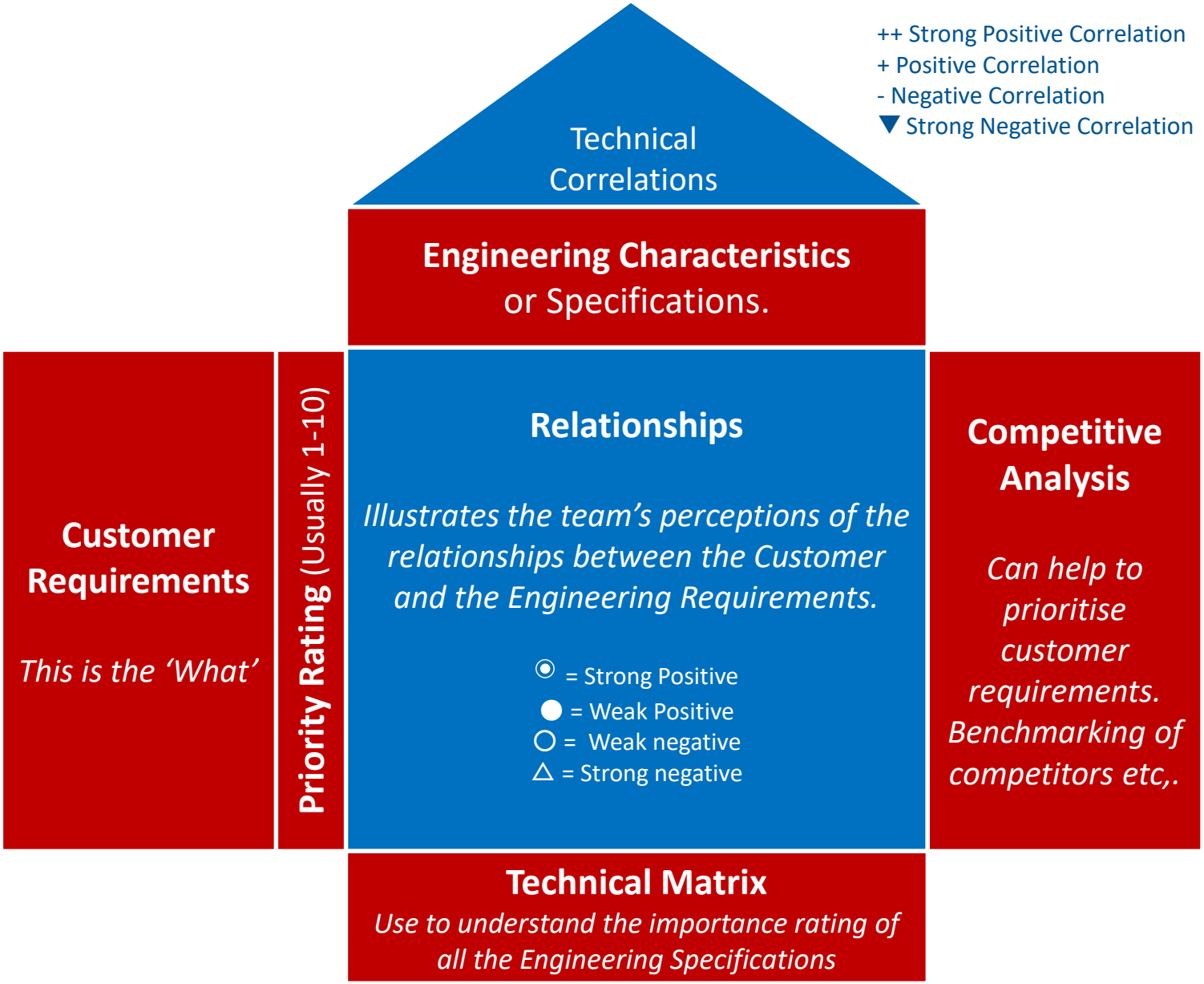

Q

Title:
Author:
Date:
Notes:

Legend		
⊖	Strong Relationship	9
O	Moderate Relationship	3
▲	Weak Relationship	1
++	Strong Positive Correlation	
+	Positive Correlation	
—	Negative Correlation	
▼	Strong Negative Correlation	
▼	Objective Is To Minimize	
▲	Objective Is To Maximize	
X	Objective Is To Hit Target	

Row #	Max Relationship Value in Row	Relative Weight	Weight / Importance	Demanded Quality (a.k.a. "Customer Requirements" or "Whats") / Quality Characteristics (a.k.a. "Functional Requirements" or "Hows")	1	2	3	4	5	6	7	8	9	10	11	12	13	14	15	Our Company	Competitor 1	Competitor 2	Competitor 3	Competitor 4	Competitor 5
				Direction of Improvement: Minimize (▼), Maximize (▲), or Target (x)																					
1																									
2																									
3																									
4																									
5																									
6																									
7																									
8																									
9																									
10																									
				Target or Limit Value																					
				Difficulty (0=Easy to Accomplish, 10=Extremely Difficult)																					
				Max Relationship Value in Column																					
				Weight / Importance																					
				Relative Weight																					

Competitive Analysis (0=Worst, 5=Best)

Our Company — Competitor 1 — Competitor 2 — Competitor 3 — Competitor 4 — Competitor 5

0 1 2 3 4 5

Powered by QFD Online (http://www.QFDOnline.com)