Prifysgol Cymru
Y Drindod Dewi Sant
University of Wales
Trinity Saint David

Research on the evacuation of personnel in college gymnasiums based on cellular automata

by

Zheming Zhang

Supervisor: Dr Tim Bashford

Second Marker: Dr Gaynor Thomas

Project submitted as part of the requirements for the award of
MSc Data and Artificial Intelligence

September 2022

Summary:

Gyms have a growing significance in contemporary culture. Because most gymnasiums have significant fire loads and densities of people, there is a greater risk of fire in these spaces. In addition, because it frequently hosts important events like sporting competitions, it is challenging to evacuate people and highly prone to result in significant injuries like stampedes. College gymnasiums also have elements of sports culture, instruction, and education. College gymnasiums are both significant venues for schools to organize sporting events that reflect the school's sports culture and locations where individuals go to engage in regular physical activity.

The traditional research on personnel evacuation is a real-life exercise, which itself has destructive and safety hazards, high cost, high requirements on the real environment, and has a large discrepancy with the real situation. This method is very unsuitable for personnel evacuation research. Crowds, especially those who are evacuating, are affected by many external factors as well as people's psychological states. It is difficult to use mathematical formulas to summarize their evacuation laws. Therefore, computer simulation is the main research method in the study of personnel evacuation in emergency situations in public places.

Emergency evacuation of people in public places mainly considers the interaction between people and the evacuation environment, which constitute a complex system. This paper starts with the behavior of evacuating the crowd, combines the previous research results and actual cases, and summarizes the factors to be considered in modeling. On this basis, a simulation model of cellular automata is established and simulated by MATLAB. Finally, this paper applies the constructed evacuation simulation model, and selects the evacuation problem of a university gymnasium in my country as a case of simulation research.

Key words: university gymnasium; evacuation; personnel evacuation;

1.Introduction

Gyms have expanded quickly along with the popularity of athletic activities. The popularity of sports culture makes it possible for more and more people to learn about and engage in sports. This not only enhances people's daily lives but also their physical and emotional health. A gymnasium is a sports facility with professional equipment, appropriate for a variety of sports activities, according to the relevant rules. There are two categories of college gymnasiums: sports type and multi-purpose type. College gymnasiums that focus on sports can also host small-field events like basketball courts in addition to their main sport. The multipurpose gym's primary use is for sports, which can also be combined with entertainment, events, parties, exhibitions, and other activities. When stadiums function as complicated venues, problems like poor quality and insufficient availability occur. The multipurpose gym can provide all the amenities the location requires and exhibits excellent availability. College gymnasiums differ greatly from other types of gymnasiums in that they are on-campus and primarily used by students, making building safety a major factor. to increase the capacity of university gymnasiums to address any risks to public security and guarantee the user's safe evacuation. To address the risk of public safety mishaps, university gymnasium design and construction must have a thorough, reasonable, and scientific evacuation system.

The advancement of social economics encourages gymnasium function expansion. Originally, the gymnasium was solely utilized for numerous sporting events at all levels, professional training locations for athletes, and national fitness activities [1]. However, with the rapid development of the social economy and the enrichment and expansion of people's lives, gymnasiums have emerged as the ideal choice for holding commercial and cultural activities due to their huge size, robust sound insulation, and spectator seats. According to statistics, 70% to 75% of the time in my country's gymnasiums is spent on cultural and leisure shows rather than sporting activity. The expansion of the gymnasium's use function to commercial and cultural activities has also resulted in the addition of additional functions such as catering, leisure, shopping, and so on, which further strengthens the gymnasium's functional complexity, increases the frequency of use, and greatly improves the openness of space and use. However, this presents a significant barrier for stadium evacuation and firefighting. As a result, the gymnasium's safety design, particularly the development of the

evacuation area and the evacuation plan, must be tailored to its numerous purposes and use scenarios, and cannot simply increase the gymnasium's construction and extend its functions. The likelihood of safety mishaps raises the gymnasium's evacuation needs. According to data, there were 37 unforeseen accidents in indoor large-scale cultural and athletic activities from 1983 to 2004, resulting in 686 deaths and 1,376 injuries. The most dangerous interior building mishap should be a fire, which will result in significant loss of property and lives. As a result, there is a separate building fire protection category in building safety to control the occurrence and progression of building fires. Gymnasiums feature a huge space, a complicated construction, and a large meeting area. The repercussions of a fire will be terrible. In 1973, for example, a cigarette butt accidently penetrated the apparatus and ignited a fire in Tianjin Stadium. The high-span arched steel roof truss began to distort and collapse after 19 minutes of fire. The big stadium, which could hold more than 5,000 people, was destroyed after 5 hours. In 1985, at the Bradford Stadium in England, a cigarette butt was tossed into a crack in the wooden stand, igniting it quickly. After one minute, the roof behind the main stand began to burn furiously and horizontally. All of the stands were destroyed by fire seven hours later. Unfortunately, there was a game going on at the stadium at the time of the fire, and the evacuation exit from the stands to the street was not opened in time, resulting in 56 deaths and more than 200 injuries [2]. As can be seen, the focus of the gymnasium safety design is the building fire [3], and the space structure and functional design of the gymnasium must be linked with the evacuation design. University gymnasiums are located on campuses and are mostly utilized by young students, therefore the issue of building safety is plainly different from that of other types of gymnasiums. To address the danger of public safety mishaps, university gymnasiums must be designed and built with a comprehensive, reasonable, and scientific evacuation system [4]. Is the general building evacuation design, on the other hand, the ideal choice for specialized groups like university gymnasiums and young students? How may the architectural space and environmental design of university gymnasiums be improved in order to increase the evacuation effect? This is the study's main emphasis.

1.1 Significance of research

The method of broad scientific study normally include making a large number of observations and statistics of natural events, as well as carrying out the appropriate

experiments if possible. Finally, the rule underlying the phenomena is summarized and defined in formal mathematical terminology using actual facts gained via observation and experimentation. Crowd movement, on the other hand, is a very complicated physical process. This is especially true in the case of evacuated masses. Many elements influence the dynamics of movement, whether directly or indirectly. The interaction between members in the group, as well as people's psychological states, are all crucial aspects that influence the movement process. Because of these characteristics of crowd evacuation, its study technique is unique. The study of evacuated people comprises two key components. For starters, conducting tests over the course of the research is tough. To begin with, evacuation studies in densely populated areas such as stadiums entail thousands of individuals, greatly surpassing the scope of conventional tests. Second, the evacuation of persons is frequently linked to the unexpected emergence of further accidents (such as fires, power outages, terrorist incidents, etc.). This hazardous scenario cannot be adequately simulated in studies. As a result, the experimental results and the real-world condition differ significantly and cannot be used as a reference. Third, there are potentially dangerous aspects hiding in the experiment, and if the experiment has gotten out of hand, it is easy to create casualties. Because of the three concerns mentioned above, the test cannot be employed as the primary method in the research of personnel evacuation. Second, numerically modeling the movement laws of evacuated persons is quite challenging. People move in at least two dimensions. The difficulty of mathematical explanation grows as the spatial dimension increases. At the same time, because the individuals that comprise the crowd are all persons with subjective thinking, their conduct is somewhat unpredictable. It is quite difficult to define the evacuation behavior using mathematical formulae based on these two criteria. Because of the above two features of evacuated crowd study, it is required to employ computer simulation technology as the primary research technique in order to get the laws underlying it from a huge number of observation data and guide practice. Experiments that are difficult to conduct in reality can be carried out in a computer-generated virtual realm without the constraints of experimental situations, scale, or money, and there is no risk of mishaps. Furthermore, with the advancement of computer simulation technology, it is no longer essential to build equations for crowd behavior when developing the simulation model, but rather merely specific behavioral features and data collected via observation. The tough task of numerically

simulating evacuated crowds is thereby avoided. As can be observed, the most essential research approach in the study of crowd evacuation is the use of computer simulation (or evacuation simulation). This is why, in recent decades, crowd evacuation research has concentrated on evacuation simulation. In addition to theoretical research considerations, evacuation simulation has significant practical implications. This aided its growth even further. The evacuation simulation system can analyze the evacuation of people in structures that are still on the designs and identify design elements that are not favorable to the evacuation of people. When opposed to making changes after the structure is finished, this saves a significant amount of money. Furthermore, the evacuation simulation system can replicate the building's evacuation scenario under various conditions, giving a reference for the construction of evacuation strategies in emergency situations. For example, organizing tens of thousands of people to undertake experiments on how to evaluate the evacuation circumstances of Beijing Olympic stadiums under unforeseen situations during the planning stage, and to prepare evacuation plans for the stadiums, is plainly unachievable. Aside from the high expense of such studies, safety incidents are quite likely to occur, resulting in the loss of workers or property. As a result, checking and verifying the design scheme or reaction plan using computer simulation is a cost-effective and realistic option. All of this demonstrates the enormous economic and societal benefits of evacuation simulation research.

On May 3, 1973, a fire broke out in the Tianjin Gymnasium. More than 320 firefighters rushed to the scene to fight the fire. However, due to the fierce fire and the low fire resistance of the steel structure, all the 3500m2 arched steel structures on the roof of the main stadium collapsed 15 minutes after the fire started. cause heavy losses. On July 2, 2007, due to illegal operations on the construction site, waterproofing materials and decoration materials were ignited, causing a fire in the Peking University Gymnasium under construction, with an area of 1100m2 (as shown in Figure 1).

Figure1. Peking University gymnasium fire

On December 31, 2010, a fire broke out in the Huanglong Gymnasium in Xihu District, Hangzhou due to overheating of the air conditioner. The fire department dispatched 2 fire fighting squadrons to put out the fire (as shown in Figure 2).

Figure 2. Hangzhou huanglong gymnasium fire

In May 1985, cigarette butts ignited the garbage at the main stand of the auditorium, causing a fire in the outdoor stadium of Bradford, England, which can seat 12,000 people. The fire spread quickly. The roof behind the main stand was demolished one minute after the open flames emerged. It was started, and the fire blazed for more than 7 hours both before and after. All of the stadium's seats and stands were destroyed by fire, resulting in 52 fatalities and over 200 injuries. On December 15, 1999, a massive fire broke out in Budapest, Hungary's capital, at a comprehensive gymnasium with a capacity of 125,000 people. It was essentially burned destroyed, resulting in massive economic losses, yet there were no deaths. A massive fire broke out at the "Boro and Ramiz" stadium in the middle of Pristina, the capital of the

Autonomous Province of Kosovo, the Federation of Yugoslavia, on the evening of December 15, 2000. Much of the building was consumed in flames, which destroyed several of the stores, hurting 18 people, six gravely and four critically. On April 8, 2003, a fire broke out in the gymnasium of Russia's Sterbil High School. The gymnasium, a two-story wooden structure, was completed in 1927. The fire started in the locker room near the first floor's entrance. There were 111 kids, 6 instructors, and 3 school personnel in the gymnasium at the time. All of the pupils were on the second floor. The fire was so intense that the pupils had no opportunity to flee. Furthermore, the gymnasium was in a distant place and lacked adequate firefighting apparatus. When the fire department arrived 30 kilometers away, 22 people had been murdered and 39 people had been critically hurt or burned. According to data on stadium fires that have happened in many countries throughout the world [5], the following features of stadium fires and personnel evacuation have been identified through comparative analysis: (1) There is no restriction on the spread of smoke. Due to the large spans, high ceilings, and enormous volumes of Gymnasium-type large-space buildings, it is challenging to install effective fire and smoke prevention partitions and implement corresponding smoke exhaust measures. Additionally, because of the effect of air convection, oxygen supply is sufficient, causing the fire buoyancy plume to be at the height of the space. When left unchecked, it may grow quickly, spread to other combustibles, and easily turn into large flames and collapse incidents that cause catastrophic injuries and financial losses. (2) It is simple to create dangerous gases. Enormous-scale décor projects and a wide variety of ornamental materials are used in large structures resembling gymnasiums. Numerous novel composite materials have emerged in recent years. It is simple for a fire to produce a lot of poisonous and dangerous fumes, which poses a major threat to the safety of the workforce. (3) Evacuation is challenging due to the large and dense crowd and the long evacuation distance. Large space structures, like gymnasiums, are frequently packed with people while hosting various sporting events, cultural performances, and other events. Individuals focus on the activities themselves and confront the unexpected due to the high number of safety exits set up and the vast evacuation distance for people to reach the safety exits. The abrupt increase in temperature, quick decrease in visibility, unfamiliarity with escape routes and fear, and so on, packed evacuation channels and exits, making safe evacuation more difficult. (4) Difficulty in firefighting and rescue operations. Because of the gymnasium's high building height, ordinary

fire detectors cannot detect the fire in time, and the commonly used automatic sprinkler system cannot function effectively in the early stages of the fire, and smoke can quickly spread throughout the building due to the rapid development of the fire. It is difficult for firefighters to detect the specific position of the fire source and reach the scene immediately for fire fighting, causing significant challenges for rescue materials, fire fighting, and rescue and evacuation [6, 7]. It is difficult to implement efficient fire and smoke prevention walls in vast space structures such as gymnasiums due to the uncontrolled spread of smoke. As a result, mechanical smoke exhaust facilities are typically installed to manage the smoke layer, temperature, CO concentration, and visibility before employees enter the safe area. Studying the impact of the location of the fire source and the stopping and turning on of mechanical smoke exhaust facilities on ASET and RSET when a building fire occurs is required because the value is within the range of the dangerous value that poses a threat to human health. This study is extremely important for lowering and controlling the risks associated with large-space building fires because it can not only give data to support the spread of fire smoke but also serve as a foundation for the design of safe human evacuation.

1.2 Research Status of University Gymnasium

With the large-scale expansion projects of new college districts in the 1990s, the construction of related sports facilities and sports venues has gradually emerged. Around 2008, under the influence of the Olympic effect, professional gymnasiums in colleges and universities for competition purposes entered a period of massive construction, and the space limitations of the original open sports venues were significantly improved. The spatial structure and functional organization of university gymnasiums begin to develop towards integration and diversification.

The information gathered indicates that some academics have focused on college gymnasiums, one of the key types of gymnasiums. Its primary focus is on investigating how gymnasiums are operated and managed inside the confines of university space, as well as exterior operating capabilities. The functional orientation and multi-functionality of university gymnasiums have received attention in the research on the existing condition and post-game utilization of university gymnasiums. The college gymnasium's use role transcends the confines of athletic events and encompasses a

variety of activities, including theater productions, product expositions, commencement exercises, and academic lectures. Due to this restriction, college gyms are now used much more frequently, maintaining long-term high densities of people and mixed streamline usage. The design of college gymnasiums is currently moving toward functional complexity, scale expansion, and high user frequency, resulting in design needs to assure user safety.

Figure3. University gymnasium

1.3 The trend of safe evacuation of university gymnasiums

Gymnasium is an important type of crowd-intensive gathering space. Under the background of frequent security incidents, the issue of safe evacuation of users has attracted the attention of relevant scholars in the academic circles. The domestic research on the safe evacuation of gymnasiums gradually formed after 2006, and reached its peak around 2012. After that, with the continuous advancement of research methods, it continued to maintain a certain degree of research enthusiasm. The development stage of foreign gymnasium safety evacuation research is basically consistent with that in China. It has been increasing year by year since 2004, and has maintained a high research interest since 2013.

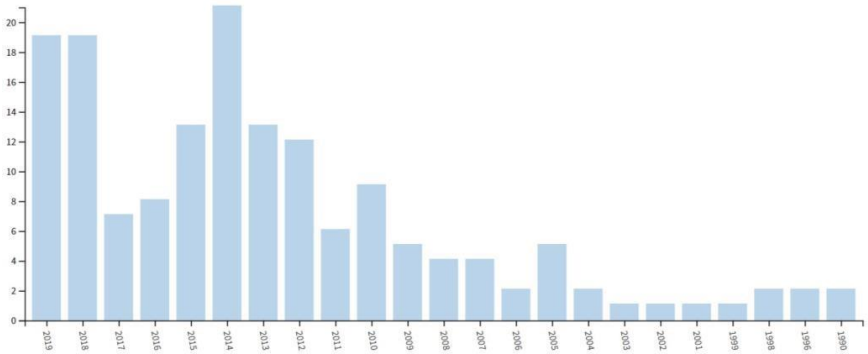

Figure 4. Annual trend of publication of papers related to evacuation of foreign gymnasiums

1.4 Research and Analysis on Safe Evacuation of University Gymnasiums at Home and Abroad

Wuhan University and City University of Hong Kong jointly developed the SGEM exploratory grid model in 2004. Professor Liu Mao from Nankai University analyzed the evacuation of crowds in mass gathering areas in emergencies. Through the analysis of Tianjin Olympic Sports, based on the different stages of mass free movement, stay, congestion and stampede, he established a crowded stampede risk theory and constructed a simulation system was developed for the relevant data model.

In the research on the evacuation simulation of the gymnasium, in addition to the discussion of the safety of the overall space, it also includes the contents of the local space composition, structure type and smoke diffusion characteristics. Guo Wei took the construction drawing design scheme of a medium-sized comprehensive gymnasium as an example, used the design and analysis method of building fire performance, and evaluated the comprehensive performance of the personnel evacuation design of the comprehensive gymnasium through the fire simulation software FDS and evacuation simulation software EVAVNET4, and proposed In order to modify the suggestion, Zhao Guomin et al. in the article "Optimization Simulation of Fire Evacuation in University Gymnasium", compared and analyzed the time data of FDS fire simulation and Pathfinder personnel evacuation simulation, analyzed the fire evacuation situation of a university gymnasium, and analyzed the fire evacuation situation of a university gymnasium. A new design scheme for safe evacuation is proposed. In the article "Application of Crowd Simulation in Gymnasium Evacuation

Design" by Xing Kai of Harbin Institute of Technology, taking the gymnasium of a university campus in the north as the research object, through the crowd evacuation simulation of Simulex software, some factors in the evacuation process of the gymnasium were obtained. evacuation problems, and put forward corresponding evacuation design optimization suggestions for these problems. Chen Qingdong and Yu Zili combined the evacuation simulation data with the fire smoke distribution to discuss the impact of the gymnasium building structure, building span, temperature changes in the fire scene, and smoke distribution on safe evacuation. Stubenschrott integrates the dynamic information obtained visually in the evacuation model, so as to update the evacuation road in time according to the scene changes. Sun Jinlong conducted an evacuation simulation of the congestion form and degree of congestion formed by the intersection of multi-directional crowds, and obtained the changing characteristics of the congestion in the spatial intersection area.

From the analysis of the relevant literature on the safe evacuation of foreign gymnasiums, it can be seen that only the early literature has analyzed the crowd evacuation behavior (Table 1). The research after 2010 is mostly devoted to the exploration and research of safe evacuation models, such as Agent-based Model, Social Force Model, Cellular-automata-based Model, etc. It has been deeply discussed in the field of safe evacuation of gymnasiums. However, although this type of research takes the gymnasium as the research subject, it is committed to increasing the depth of the evacuation model discussion, ignoring the discussion of the interaction law between the gymnasium space itself and safe evacuation.

Table 1. Current status of evacuation research in foreign gymnasiums

topic	years	author	Research method
Design Guidelines for Crowd Evacuation in a Stadium for Controlling Evacuee Accumulation and Sequencing	2018	Minegishi	Agent-based model Evacuation Simulation
Optimizing stadium evacuation by integrating geocomputation and affordance theory.	2018	Zale Joslyn	Agent-based model Evacuation

			Simulation
The solution of fire safety problems under a design stadia with computer fire and evacuation simulation	2018	Kirik E	Mathematical model evacuation simulation
Improved System for Modeling and Simulating Stadium Evacuation Plans	2017	Xie Haiyan Weerasekara	Dijkstra's algorithm Evacuation Simulation
Study on the Social Force Model of Personnel Evacuation in Large Stadiums	2017	Ming	Social force model Evacuation Simulation
Research on the Personnel Evacuation Simulation Model for Large-Scale Stadium	2017	Wang Junhai	Agent-based model Evacuation Simulation
Real Data Evaluation of a Crowd Supervising System for Stadium Evacuation and Its Hardware Implementation	2016	Tsiftsis Anastasios	Cellular-automata-based model Evacuation Simulation
The Intelligent Support Programming of The Fans Emergency Evacuation of the Sports Stadium Event	2016	Pacholsiki Leszek	Genetic algorithms Evacuation Simulation
Crowd Circulation and Stadium Design : low flow rate systems	2005	Brockl ehurst	Evacuation Safety Design
Simulation of the evacuation of a football stadium using the CA model PedGo	2003	Klupfel H.	CA model PedGo Evacuation Simulation

Assessing Crowd Dynamicsand Spectator Safety in Seated Area at a Football Stadium	2001	J. Gilroy	Disaster assessment
Complex evacuation; effects of motivation level and slope of stairs on emergency egress time in a sports stadium	1999	Graat E.	Evacuation Behavior

Evacuation behavior data and models are the basis for safe evacuation research, and were mainly obtained by interviews with post-disaster crowds and videos during disasters in the early stage. Due to the sudden and destructive characteristics of disasters, it is more difficult to obtain effective data. Therefore, questionnaires have become one of the important means to collect evacuation behavior data and extract crowd behavior patterns. For example, Professor Chen Baozhi of Northeastern University explored and analyzed the movement law and evacuation cycle of groups when a building fire broke out. For college students, he constructed a reasonable and scientific evacuation time influencing factor model by means of questionnaire analysis, exercises and regression calculations, and analyzed the impact. Factors are mainly gender, fire knowledge and drill experience.

In the distribution of keywords in domestic gymnasium evacuation papers, there is a special study on the safe evacuation of university gymnasiums. The papers on the safe evacuation of university gymnasiums from 2010 to 2015 all used the simulation platform as the research method. Later, some scholars used the path generation algorithm to incorporate the road network around the gymnasium into the safe evacuation system. Therefore, the evacuation research of domestic university gymnasiums is still in its infancy, and the research methods are relatively simple.

To sum up, with the development of evacuation simulation platforms, existing research has paid relatively little attention to the basic collection of crowd evacuation behavior data. Although the universal evacuation model can be adapted to the simulation of evacuation scenarios of different building types, it still has certain limitations in the restoration of the evacuation behavior of specific people. At the same time, due to the computational limitation of evacuation simulation, it is difficult to restore the influence of the subtle

behavior differences of the crowd on the evacuation results by using evacuation simulation as a method. Therefore, it is necessary to collect and analyze evacuation behavior data for high-frequency users according to the spatial form and traffic organization mode of university gymnasiums.

Figure 5. Year of publication of domestic research results on safe evacuation design

The domestic safety evacuation design research started in the 1990s, and the research results showed an upward trend year by year, until 2012 and maintained a

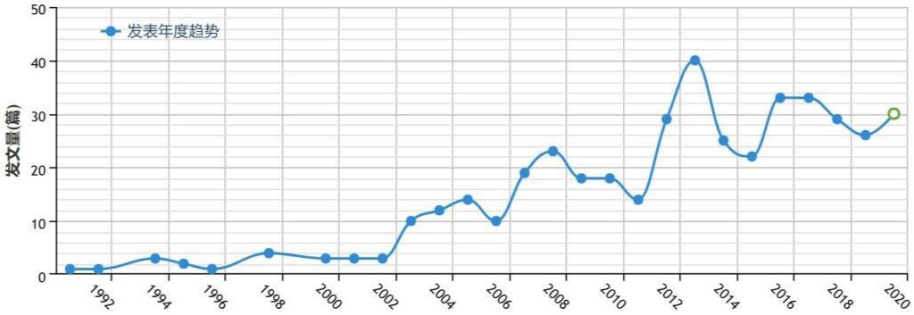

relatively stable output. The development trend of foreign safety evacuation design research is similar to that in China, and the number of published papers has increased significantly after 2004, until it reached a high point in 2019.

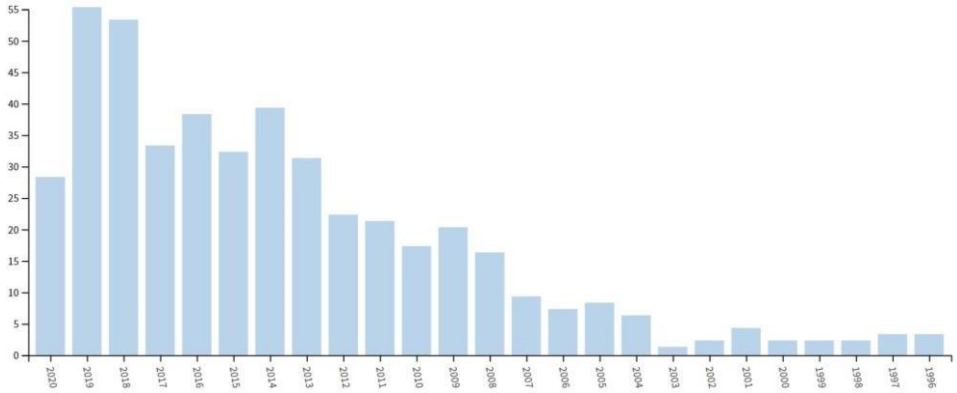

Figure 6. Years of publication of foreign research results on safe evacuation design

According to the cluster analysis of the research results of safety evacuation design, the safety evacuation design of high-rise buildings and commercial buildings is of great concern. Fire protection design and fire protection design derived from fire disasters occupy the main part of the design strategy. The overall planning of all-round design methods for safe evacuation has received corresponding attention. The concept of building safety design was formed in the 1980s. Many countries with high economic development levels such as the United States and Japan have invested heavily in the practice of design strategies for maintaining building safety. Brazil,

South Africa and other developing countries have also carried out relevant research Work. After the Tianjin FORUM meeting in 1997, my country began to study systematic building safety design methods and standards, and in 2004 proposed the Technical Guidelines for Building Performance-based Fire Protection Design. According to incomplete statistics, about 1,000 large-scale buildings (about 1% of the total) in mainland China have adopted fire prevention design methods in their construction.

Ensuring the safe evacuation of people in buildings is an important aspect of building safety design. From the perspective of personal safety, different building types comprehensively analyze the relevant factors affecting the safe evacuation of people. Using such design schemes and analysis strategies to maintain the safety of people's lives and properties in buildings is the focus of current performance-based design and research.

Xiao Jianfu discussed the optimization method of space variables such as pedestrian street scale, atrium form, safety passage, and entrance and exit settings in the simulation study of safe evacuation of commercial complexes. Liu Ying took the stadium stand unit setting and crowd evacuation mode as the starting point, combined with the evacuation simulation platform, and obtained the optimization strategy of functional layout, traffic flow line and stand design. Haghani explores the potential impact of architectural spatial morphological differences on crowd evacuation behavior, so as to provide a basis for spatial design optimization. Darmon combined the CFD information of the fire smoke to obtain the design strategy of the fire station's safe evacuation. Mitko provides data support for the optimal design strategy that is conducive to the safe evacuation of crowds according to the vertical traffic organization mode of the building.

The existing safe evacuation design strategy mainly uses the evacuation simulation platform as a means to realize the optimization of the space type and the form of traffic organization, and to extract the evacuation weak links. It has the advantage of quickly obtaining evacuation data for specific building cases. However, the inherent evacuation model can restore the crowd evacuation behavior to a limited extent, and it is difficult to combine with the actual needs of actual users and the dynamic changes of various environmental factors during disasters. Therefore, the building space still has a large excavation space in

terms of interaction with crowd evacuation behavior and physical environment.

1.5 Advanced Technology

Artificial intelligence (Artificial intelligence), also known as intelligent simulation, uses a computer to simulate the intelligent behavior of the human brain, including: perception, learning, reasoning, countermeasures, decision-making, prediction, intuition, association. Artificial intelligence is a knowledge information processing system. Applying Artificial intelligence to the establishment of an Evacuation model during a fire can more realistically simulate the real-world situation when people are evacuated. The AI-based Fire Evacuation model is based on individuals in the evacuated population. This individual unit can perceive the information of the surrounding environment, and can comprehensively consider factors such as the surrounding environment, its own characteristics, and the interaction between individual units, and then guide the individual's actions. The superposition of the behaviors of all evacuated individuals constitutes the group behavior of the fire evacuation crowd. The evacuated crowd is composed of a large number of intelligent individuals, and the intelligent individuals in contact are divided into several groups, and each group has an evacuation leader. The evacuation state when a fire occurs can be divided into two states: Normal State and Emergen cy State. The travel path and speed of the next group in Normal State are limited by the evacuation leader. When there are elderly, weak, disabled and disabled individuals in the group, it is shown that the individuals help each other and care about each other, which is limited by the speed of the elderly, the weak, and the disabled. The speed at which the leader is evacuated thus controls the speed of the entire group. Speeds and paths can vary from group to group. Under Emergency State, in order to express the fear characteristics of intelligent individuals, the restriction of evacuation leaders in the group has no effect on intelligent individuals, but only plays the role of guiding paths. Even groups can be disbanded, and intelligent individuals behave as:

(1) Individuals will choose the shortest path from the safe evacuation exit and use the fastest speed that the intelligent individual can take.

(2) The crowd is crowded at the main safety exit, and the evacuation speed is slow. The application of artificial intelligence technology to the fire crowd evacuation

simulation can more closely reproduce the actual situation of crowd evacuation when a fire occurs, showing the characteristics and individual behaviors of the evacuated individuals. In this way, the process of evacuating people in a building when a fire occurs can be simulated more clearly, and it is easier to discover the hidden safety hazards exposed by the building in this aspect, and further provide more practical guidance for the formulation and modification of evacuation plans.

The evacuated intelligent individuals have a large number of behavioral events, and intelligent individuals can transition from one behavioral state to another state according to the environmental information they perceive. Through the artificial intelligence control system, it is determined which Behavior to execute becomes the behavior choice. An important part of this process is the decision rule modeled in the form of a decision tree. According to the perception information, a behavior is selected under the influence of its own characteristics and environment. Different decision trees represent different decision types. Take a very simple decision tree example: if a safe evacuation exit is visible and not blocked by fire, then take it as the target, and establish an unobstructed path to move to the target point, otherwise continue to search for other paths. In this example, "if a safe evacuation exit is available" is a condition, "pick it as the target point" is an action, and "move to target point" and "continue searching for other paths" are two action decisions . The simple single behavior decision selection of intelligent individuals is completed by the Single Decisiontree (decision tree), and the complex decision selection is completed by the Mutiple Decision tree group.

2. Complementary ideas and theoretical evaluation

The factors that affect crowd evacuation in university gymnasiums are extremely complicated and are strongly tied to both the state and behavior of individuals as well as the design of university gymnasiums. This chapter will examine the relevant concepts and theories from two perspectives, the situation in university gymnasiums and the cellular automata method for modeling crowd evacuation, in order to elucidate the reasons influencing the evacuation of university gymnasiums. The composition, mode of operation, and growth of cellular automata in the context of pedestrian evacuation will next be examined in this chapter.

2.1 Characteristics of college gymnasiums

College gymnasiums offer features that promote social welfare, education, and sports culture. College gymnasiums serve as both essential locations for schools to organize sporting competitions as well as places where people may engage in daily athletic activities[8]. Because of their dual cultural and modern design considerations, college gymnasiums should reflect both tradition and modernity. Sports facilities are used by instructors and students to teach sports activities that represent their educational and teaching qualities. These facilities should be flexible enough to satisfy the demands of both teachers and students[9]. College gymnasiums can be used by non-college personnel for daily recreation, reflecting their social welfare characteristics, and the design should take this into account. College gymnasiums differ significantly from academic buildings, libraries, and other types of school architecture. The collaboration with other useful school buildings should be carefully taken into account during planning. The design of college gymnasiums realizes the natural fusion of culture, atmosphere, and inheritance, and demonstrates to students how style, history, and culture can offer people a healthy, fresh, and full of life. This design also supports the spirit of teaching and educating people[10]. College gymnasiums serve as sites for contests, theater productions, assemblies, and other events in addition to serving as places for sports instruction. These facilities differ significantly from social gymnasiums in that they must be separated into several sports venues [11]. To meet the needs of various projects in their respective locations, gyms for professional athletes or social groups can be separated into areas for various sports, such as ball games, track and field, gymnastics, fencing, etc. In colleges and universities, the gymnasium is used mostly for teaching projects, sporting events, and doing projects like art exhibitions and concerts. The number of instructors and students at the university determines the size of the university gym, or the number of seats allocated [12]. When building colleges and universities on a wide scale, gymnasiums may assist integrate additional resources, maximize the centralized use of the facilities, and give greater development space. new difficulties. Large-scale indoor activities are common in colleges and universities, where there are typically more than tens of thousands of teachers, staff, and students. The gymnasium must thus have a capacity of more than 1,000 persons. Colleges with significant

populations of teachers, staff, and students often have multipurpose gymnasiums with capacities exceeding 5,000 people. There will be an abrupt rise in temperature and an abrupt entry of smoke when a fire mishap happens. These circumstances make it difficult to safely leave to a safe region in a timely manner and will alter how the stadium population is judged, clogging evacuation channels and exits. It exacerbates fear, causing people to pack together and easily results in stampede deaths during the evacuation process, which has political and societal repercussions. To ensure the regular operation of the university gymnasium and the appropriate handling of emergencies, it is necessary to design a targeted safety evacuation plan, carefully consider the university gymnasium's evacuation process, reduce streamline conflict in the design plan, and improve the evacuation efficiency. Targeted evacuation design is also required to accommodate the gymnasium design at universities. The architecture of university gymnasiums has a wide width and a high ceiling, which makes it simple for the fire to spread when compared to typical commercial structures. Once a fire starts in such a wide area, it will spread and increase due to the action of air convection, creating a large-scale fire and making combating it more challenging. Second, college gyms are decorated extensively using sophisticated materials. The materials used for decorations burn quickly and emit poisonous gases in the case of a fire. In the construction of college gymnasiums, several kinds of decorating materials are employed. Numerous novel composite materials have emerged in recent years. The gym now poses a greater fire risk due to the usage of flammable materials. When a fire breaks out, a lot of hazardous and dangerous gases are released, which poses a major risk to crew evacuation. Finally, college gymnasiums include a lot of fire sources, making it simple to create a high-temperature atmosphere. A lot of electrical equipment in the gym, fireworks launched during cultural and athletic events, spectators smoking, and electric welding during routine maintenance are all things that might easily start a fire. Internal gathering that makes evacuation more difficult From the accident cases in recent years, it can be observed that fires that spark riots among the audience and later stampede accidents are the major accidents in stadiums that occur frequently, inflict significant injury, and have a significant impact. The impact on society is particularly negative when there is a fire in the gym or other emergency, and there are frequently serious injuries to people

and property. Modern university sports facilities serve more complicated purposes, get a wider range of usage, and have more comprehensive safety precautions. Contrarily, the old campus's typical single-story, one-building layout and relatively dispersed locations with significant populations of people have inadequate safety equipment, making personnel evacuation during emergencies riskier. The research on evacuation is very important. How can you do it well? Stadium evacuation plans are a significant topic that requires immediate consideration and study. The single-storey gymnasium serves as the primary study object of this work since it offers some fresh research concepts for the safety protection of this type of building amenities[13,14].

2.2 Safe evacuation of personnel

When a fire breaks out in a building, three essential aspects, the building's construction, the fire's growth process, and the psychology and conduct of the workers, all have a stronger influence on the safe evacuation of personnel. The construction of the building restricts the spread of fire and the movement of people. The kind and location of combustibles induce unpredictability in the growth of the fire, and various people's evacuation behavior in the case of a fire is also quite variable. As a result, research on fire personnel evacuation focuses primarily on the personnel evacuation model as well as personnel psychological and behavioral aspects. Evacuation research has gone through various phases. From 1950 through 1977, John Bryan primarily investigated the evacuation behavior of fire personnel, culminating in the "Technical Manual of Emergency Evacuation Assessment in Buildings" published by NBS, which is widely recognized as the early study stage of this topic [15]. With the fast growth of computer technology during the 1980s, Canter [16] and others have employed the approach of computer numerical simulation to analyze people's evacuation behavior following a fire, and have attracted broad attention. The first step of study consists mostly of observation, interviews, and experimental video. At this point, many international scholars have conducted extensive research, primarily on empirical formulas for calculating evacuation time, people's walking ability, and the flow coefficient of evacuation exits, who have proposed empirical formulas for calculating evacuation time when people are in different positions of the building. Although these

methods can calculate the evacuation time of people in ordinary buildings, standard empirical calculation formulas cannot effectively calculate the safe evacuation time of people in buildings with different structures and functions, particularly tall and clear buildings. Countries such as the United Kingdom, the United States, and Germany have performed extensive study on the evacuation model as well as the psychological and behavioral components of troops since contemporary times. The researchers meticulously watched and studied personnel flow patterns.

2.3 Analysis of the impact of fire on personnel evacuation

The psychological world of people frequently involves judgment and awareness of the surrounding environment. People's psyche changes depending on the environmental situations they are in. The mindset of those fleeing a fire is quite different from that of a regular evacuation. The evacuees may be thought of as a relatively disciplined and ordered bunch when there is no fire. But when a fire broke out, this group split apart and became a disorganized bunch. The tragedy had a significant influence on the evacuees' mentality, which led to significant alterations and, in some extreme cases, mental instability. Evacuees are significantly impacted by the threat of danger and the anxious environment. Individual panic will significantly lower the evacuation's effectiveness as a whole. The psychology of evacuees throughout the evacuation process is extremely varied and complex. The following five evacuation psychology are most likely to occur and have the biggest influence on staff efficiency: (1) Ordinary people typically communicate their dread of potential danger. Evacuees frequently exhibit excitement, tension, irrationality, impulsivity, sluggishness, despair, and other moods that are frequently extremely unfavorable to escape due to fear of harm or death. Furthermore, a lack of coordination, structure, and discipline among groups will make evacuation efforts much less effective since disputes may quickly break out as a result. (2) Phototropism In general, people believe that light represents beauty and that darkness represents danger. Individuals still have a tendency to migrate to a bright, open area when danger arises. This is especially true when a fire does. When the smoke volume is high, people are more likely to do this. (3) When a nearby psychological danger arises, the situation is urgent and critical, and the evacuees will always do their best to flee the

threat in the shortest amount of time. As a result, the shortest escape distance becomes the best option, and frequently, people will be evacuated using the nearest evacuation exit or evacuation stairs. (4) Herd instinct People's judgment will generally deteriorate in a risky situation due to the interaction of the environment's danger and complicated psyche, making them more susceptible to being led astray and misled by others. People sometimes succumb to the chaos of a fire's chaotic situation and make decisions based on the preferences of the great majority. 5) Consistent psychology Because of their precarious condition and deteriorating judgment, evacuees sometimes lack tolerance for deliberate action and move swiftly. They continue their past patterns of conduct directly instead of using the exits, stairs, and other means of evacuation, for example. This research will examine the psychology behind the huge gymnasiums' fire safety evacuation plans. Applying them to the simulation can produce results that are as scientifically sound and realistically reflective of the scenario as feasible. Behavior is the clearest external expression of psyche. Following a significant change in the evacuees' evacuation psychology, their conduct changes as well. In a similar vein, behavior during this evacuation will change significantly from behavior under normal conditions. Following the disaster, the evacuees engage in selfish or non-adaptive behaviors. This type of conduct will disregard the appropriate response to a dangerous circumstance, the assistance of others, and the contribution to the group. It will drastically undermine the general sense of order in an emergency, and it's quite likely to create confusion and negatively impact the effectiveness of group evacuation. When a threat materializes, anxiety and dread can cause a deterioration in people's judgment and deviant conduct. Re-entry behavior Evacuees may return during the evacuation process and re-enter the catastrophe scene in an effort to locate lost loved ones, preserve property, assist others, and try to prevent disasters. The panic behavior of evacuees typically manifests as blind following, crowding, phototaxis, etc. This action frequently lowers the effectiveness of the overall evacuation and makes it simple to cause casualties. In the course of an evacuation, crossing barriers is a highly frequent behavior. The evacuees frequently exhibit the habit of crossing obstacles in order to leave the unsafe area as quickly as possible or when it is required to do so in order to continue their escape. Crossing chairs, railings, windowsills, etc. are common examples, as well as crossing smoke and open

flames. While panicked crossing behaviors may result in confusion and fatalities, which is detrimental to the overall evacuation efficiency, clearly judged crossing behaviors will raise the escape rate and aid to increase the overall evacuation efficiency. A sound scientific foundation is also based on the simulated application of diverse evacuation behaviors. The way people evacuate under fire situations is another key setting connection in the scenarios that follow.

2.3 The basic theory of cellular automata

2.3.1 Basic elements of cellular automata

(1)A dynamic system known as a cellular cellular automaton evolves in discrete time according to certain local rules and is specified in a cellular space made of cells with discrete and finite states [17]. Its four fundamental units are the cell, cell space, neighbors, and rules. Cells are the fundamental building blocks of cellular automata, commonly referred to as units, primitives, or cells. On a grid of distinct one-, two-, or multi-dimensional Euclidean spaces, the cells are arranged randomly. The most fundamental elements of cellular automata are cells, which are arranged in a grid of uniformly dimensional space. The most fundamental elements of cellular automata are cells, which are arranged in a grid of uniformly dimensional space. Each cell has one or more states, each of which is one of a small number, including "occupied," "empty," "juvenile," "young," and "old," among others. The cell space refers to the collection of regular grids in which the cells are arranged. According to Figure 2-3, there are three typical cell shapes: triangle, rectangle, and hexagon [18].

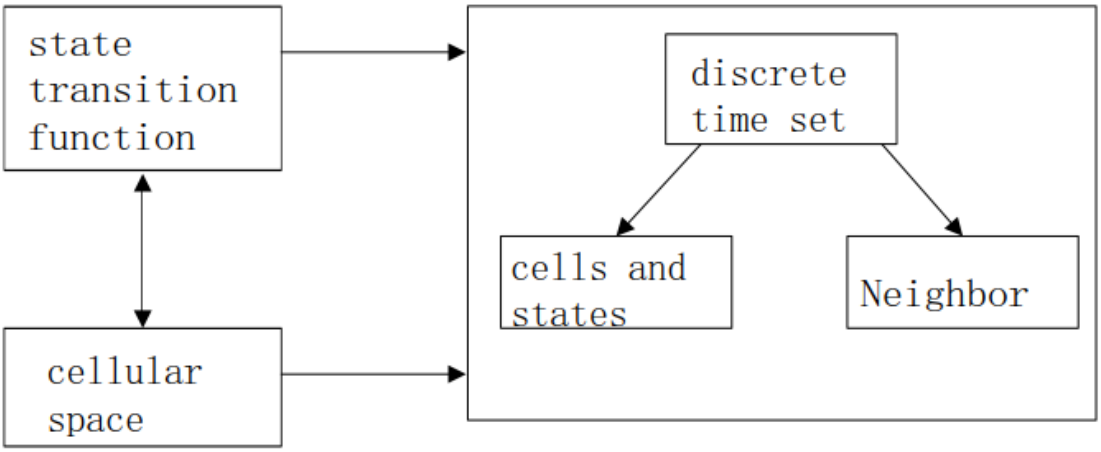

Figure 7. Cellular Automata structure diagram

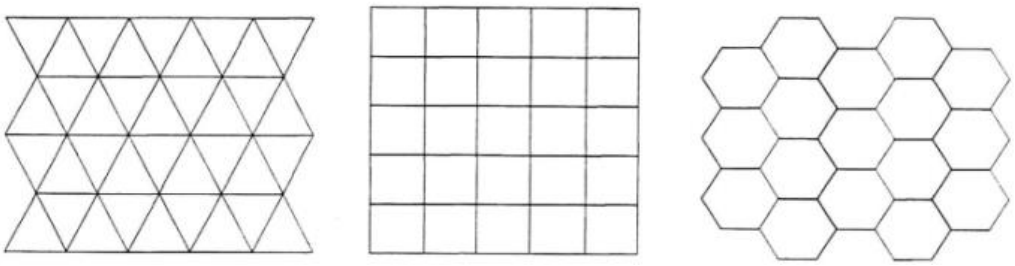

Figure 8. Three typical shapes of ingots

(2) The cell state in practical applications often consists of a discrete set of numbers. They may be translated to integer sets for various sorts of values, such as "red," "self," and other color values. In practice, it is possible to expand the concept such that each cell contains several state variables even if, strictly speaking, a cell may only have one state variable. The number of neighbors and distribution parameters have a big impact on the simulation outcomes in cellular automata. As seen in Figure 2, common neighbor kinds include the Von Neumann type, Moore type, and extended Moore type [19].

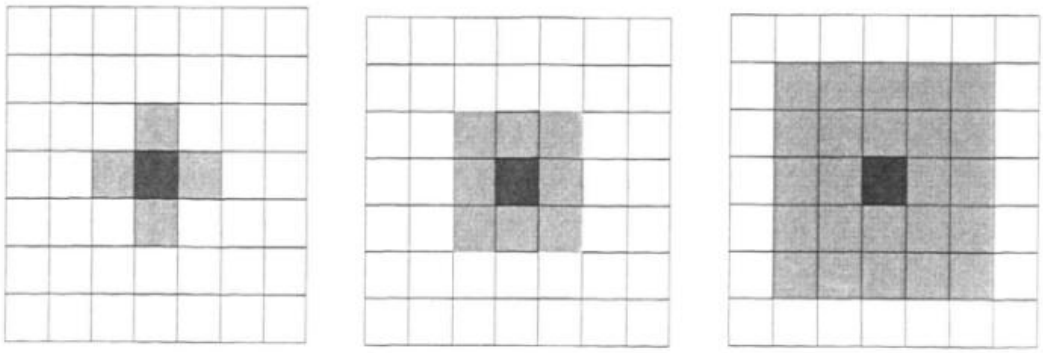

Figure 9. Common Neighbor Types

(3) Cell space is the space grid set of cell distribution.

2.4 Characteristics of Cellular Automata The shallow microscopic cellular automata model contains the following features:

(1) The same change rules are followed for all synchronous cell state changes.

(2) The cell's state is chosen from a finite set of states, the cells are dispersed uniformly throughout a discrete space, and the time points at which the cell is updated are discrete time points associated with the step size. Therefore, discrete time, discrete space, and discrete state are characteristics of cellular automata.

(3) The condition of each cell itself and its neighbors at time t-1, which has restrictions, determines the state of each cell at time t and only that.

(4) The cell and its modifications are tidy and regular, making them ideal for parallel computation on computers. The prior practical observation techniques, which were costly, inconsistent, and potentially dangerous, could not fulfill the demands of research on large-scale pedestrian emergency evacuation, as was stated in the introduction. The emphasis of subsequent study is model simulation. Macroscopic models, microscopic models, and shallow microscopic models are the broad categories into which emergency evacuation models have traditionally been split. The earliest model is the macro model. It takes into account the evacuated population as a whole and disregards the individual characteristics of pedestrians. The calculated findings and measured data differ significantly, and thus lacks any useful information. The simulation effect is the best among the three types of models because microscopic models like the social force model and magnetic force model take into consideration the variations between pedestrians and make extensive use of mathematical techniques to build operating rules. The findings cannot be produced by manual calculation since the microscopic model contains numerous and intricate operating rules that need a significant amount of computation during the emergency evacuation of numerous people. Even with a computer, it is challenging to fix this flaw at this point. Less is more as a framework for theoretical investigation. Cellular automata models and lattice gas models are examples of shallow microscopic models. It is distinguished by a high simulation level and straightforward calculating principles. The amount of calculation is reduced while still producing a better simulation effect. The findings can still be computed even if there are hundreds of thousands of pedestrians. The cellular automata model is comparable to a "upgraded version" of the lattice gas model when contrasting the two shallow and microscopic models. The two different kinds of models share a lot of the same fundamental theories and frameworks. The cellular automata is superior because it incorporates more variables, has a richer shape, and produces a better simulation result. As a result, the present simulation study mostly uses the cellular automata model as its modeling framework.

3 Basic theory and model introduction of personnel evacuation modeling

The human movement model uses scientific terminology to explain the actual properties of human movement. There is still some disconnect between the evacuees' perception of their own qualities and reality due to the complexity of personnel movement and the incredibly complicated decision-making processes involved in each operation. Additionally, each person's personality and psychology also play a role. It is not the same, and because of how complicated human interactions are, it is challenging to identify the traits that all complex people movement events have, making it hard to develop a generic model of people movement. There are several models of human mobility that have now been proposed by scientists; these models will not all be listed here. This chapter only introduces some of the more widely used human motion models.

3.1 Model for simulating human motion using particles

Particles have been used to describe the representation of naturally fuzzy phenomena, such as water, clouds, gas, and fire, in the area of computer graphics since 1983. French physicist Eric Bouvier is credited with developing the particle-based human motion model. The properties of the particle-based human motion model are mostly as follows:

(1) By simulating each individual in the crowd with "particles," the entire crowd is viewed as a particle system. Every one of them has a different set of characteristics, and the particles interact with one another by moving about and influencing one another. A particle's motion is determined by the interaction of all the forces acting on it. The direction and speed of each particle's movement may be regulated after computing the velocity, acceleration, location, and other parameters of each particle in order to simulate human movement.

(2). The force state of the particles is jointly determined by all the objects in the scene. The system density of particles, collision detection, the destination of particle motion, how to handle obstructions, and other factors should all be taken into account while running a particle-based simulation of human motion. The outcomes of the

simulation of human mobility will be influenced by these variables. In other words, the force of each evacuated personnel determines the movement of the personnel in the particle-based personnel simulation.

(3) The realistic and easy-to-abstract human motion simulation model created by particles is appropriate for human motion behavior with clear features, such the flow of people in a subway station. It is necessary to further expand and improve on the basis of this model in order to account for the complexity and increased decision-making knowledge of people's movement behavior. Examples include developing a decision-making knowledge base and providing a learning method for people's behavioral patterns.

3.2 Model for Fluid Dynamics

A more accurate and developed personnel evacuation model is the fluid dynamics model created on the basis of fluid mechanics. The evacuation of crowds is modeled using fluid-like characteristics, and the interplay between velocity and density over time is modeled using partial differential equations in a manner similar to fluid dynamics. A continuum model is used to represent the behavior of different sorts of pedestrians inside the system. Hughest83] constructed the equation of motion governing the two-dimensional flow of the evacuees in order to illustrate the motion mechanism of the super large group. The concept of "flow of thought" based on the distinct personality traits of the evacuated troops. To describe some fundamental aspects of this mobility, Colombo et al. [20] Evacuation flow model. This model is specifically designed to describe the phenomenon of crowd overcompression, where the crowd becomes crowded due to panic, causing the exit to flow out.volume dropped down. According to the model, if there is only one exit available for a group of individuals to leave the corridor, and that exit has a low outflow capacity, panic among those who are close to it will cause the outflow to be lower than it would otherwise be.

3.3 Social Force Model

American psychologist K. first proposed the idea of social force. According to Lewin's theory, researchers D. Helbing et al. have been looking at how different contextual elements affect how people walk since the 1990s. They used Molecular Dynamics and K.

He proposed the idea of "social force" guiding pedestrian movement based on Lewin's "psychological field theory" and collectively referred to numerous elements that cause walkers to modify their motion state during the movement process as "social force." He also presented a social force model. In reality, the safety of the evacuees is put in jeopardy when a huge group of people rush to the exit at once. They will run into this circumstance at the same moment. The initial group of evacuees will move more slowly as they approach the evacuation "bottleneck," while the remainder of the crowd will continue flowing forward, blocking the evacuees at that point. The ones in the front will experience a tremendous and damaging pressure from even a very slight shove from the folks at the back. As a result, some people can trip and fall, making it more difficult for the remaining crowd to proceed. The basic goal of a good human motion model is to be able to reflect this phenomena. The evacuation behavior of persons in a panicked condition was thoroughly researched by Dirk Helbing and colleagues, who also created a computer model of this behavior. The force exerted by each evacuated person can be calculated to determine the evacuation speed of personnel, simulate the behavior traits of personnel evacuation in a panic state, determine the speed of personnel evacuation when they pass through narrow passages, and determine the potential number of injuries during the evacuation process. The social force model's key benefit is that it defines the equations of motion in terms of the crowd's real force. As a result, the model may more accurately depict the phenomena of conflict brought on by the contact force in actual human movement. An essential goal of people evacuation modeling and simulation is to reflect these occurrences. The social force model comes the closest to reality in certain ways. On the other side, the model also makes it simpler to assess personnel damage and simulate different behaviors and performances of evacuated workers, which is useful for developing safe evacuation strategies for building occupants. This model's downside is that it requires too much computing, consumes a lot of system resources during computer simulation, and takes a very long time.

3.4 Cellular automata model theory

Cellular automata (CA) is directly tied to the advancement of computing technology. The appearance of cellular automata offers a foundation for the design of early

computers. Its essence is a type of discrete temporal dimension. CA may be traced back to the 1950s, when American mathematician Von Neumann began to examine the potential of a meridian replicator based on the concept of his colleague S.M.Ulam. He employed CA to illustrate the fact that the machine can mimic itself, and arrived to the conclusion that if the machine can imitate its own activities, it signifies that there is a law of self-reproduction. Von Neumaan invented the first two-dimensional cellular automata. Cellular automata split space into numerous discrete state units based on a regular grid. These units are known as cells, and they can only accept values from a limited number of distinct states. These cells follow the same law of action and are modified in accordance with local legislation. The development of the entire system is dictated by cell contact rather than by a single cell. Cellular automata are not dictated by rigidly specified physical equations or functions, and they differ from generic dynamic models in that they are made of rules established by a sequence of models. Any model that fulfills these principles is a cellular automata model. Cellular automata is a broad name for a class of models or technique frameworks that are distinguished by discrete time, space, and state. Each variable may only have a finite number of states, and the rules for changing its state are time and spatially bound. are regional. Each cell creates a new state at each time as a result of the combined action of local rules and the states of nearby cells, which is utilized as the updated value of the cell state at the following moment. The form of cellular automata is defined as: let L be a uniform lattice (the one-dimensional case is a lattice point, and the elements of L are called cells), S is a finite set, representing the state set of the cell, $S = \{0,1,...,k-1\}, k \in Z$ N is a finite set representing neighbors, and r is the radius of neighbors, such that, $\forall r \in L, \forall c \in N, r + c \in L$ let $: f : S^n \to S$ be a transfer function (also known as a local rule), then we call the quadruple (L, S , N , F) a cellular automaton.

One-dimensional cellular automata [21] is a cellular automata whose cellular space is one-dimensional. It is assumed that a series of identical cells are distributed at equal intervals on a straight line, and each cell has only a finite number of states. There is a finite determination rule near each lattice point, that is, the transfer function f, the time is discretized, and the integer value is taken, and t=0 is called the initial time. Assuming that the above line has no limits in both directions, there are infinitely many cells. The

state of all cells can be represented by a double-sided infinite sequence of symbols. A one-dimensional cellular automaton is strictly defined. It consists of a row of cells. Each cell has a definite state value ai of 0 or 1 at a discrete time t. The cell is determined by the function of the state of the neighboring cells. The state at the next discrete moment:

$$a_i^{t+1} = \phi[a_{i_r}^t, a_{i_r+1}^t, \ldots, a_{i+r}^t]$$

In the formula: ai - the state of cell i;

r—the size of the cell neighborhood (r=1 or 2)

One-dimensional cellular automata [22] are cellular automata with a one-dimensional cellular space. It is assumed that a succession of identical cells are spaced at equal intervals down a straight line, and that each cell has a finite number of states. Near each lattice point, there is a finite determination rule, that is, the transfer function f, the time is discretized, and the integer value is taken, and t=0 is termed the beginning time. There are infinitely many cells if the above line has no limitations in either direction. A double-sided endless series of symbols can represent the condition of all cells.

S. Wolfram's study demonstrates that, despite their simplicity, elementary cellular automata exhibit tremendously complex spatial shapes. According to the ultimate evolution outcome, S.Wolfram categorizes cellular automata into four types: It tends to a fixed state that does not change over time; it tends to periodic deconstruction; it leads to the formation of chaotic behavior; and it progresses into a more sophisticated deconstruction. The first three forms of behaviors are analogous to fixed points, periodic orbits, and chaos in low-dimensional dynamical systems, whereas the fourth type of behavior is analogous to self-organization events in complex systems such as biological systems.

A two-dimensional cellular automaton is one in which the cellular space of a cellular automaton is a two-dimensional plane. Two-dimensional cellular automata are commonly employed when modelling real-world situations with CA. A uniform grid makes up a two-dimensional cellular automaton. The grid might be triangular, square, or hexagonal in form. In simulation, each of the three grid shapes has advantages and downsides. A square grid is typically employed. Because triangular and hexagonal meshes are cumbersome for computer expression and display, they are generally turned into square meshes by mapping, hence triangles or hexagons are only used in a few

circumstances.

In most cases, the theoretical cell space is unlimited. In practice, the grid is frequently confined to a small size, and several boundary conditions are utilized to tackle the problem of a small grid. Boundary circumstances are classified into three types: periodic, reflective, and fixed. These three boundary conditions can be merged in actual simulation, particularly in the deconstruction of two-dimensional or multi-dimensional problems.

The update rule of cellular automata can be described as: the state of the i-th cell at time t+1 is a combination of the state of the i-th cell at time t and the state of a finite number of cells in its neighborhood at time t. determined, namely: $S_{t\ \ 1}$ $f(S_t, N)$

where S is a finite state set of cells; N represents a combination of cells in all neighborhoods, and is a space vector containing n different cells, expressed as N $(A_1, A_2, ..., A_n)$; n is the number of neighbor cells. For Von Neumann-type neighborhood, n is 4, and for Moore-type neighborhood, n is 8; f represents the S_t Mapping to a state transition function on $S_{t\ \ 1}$.

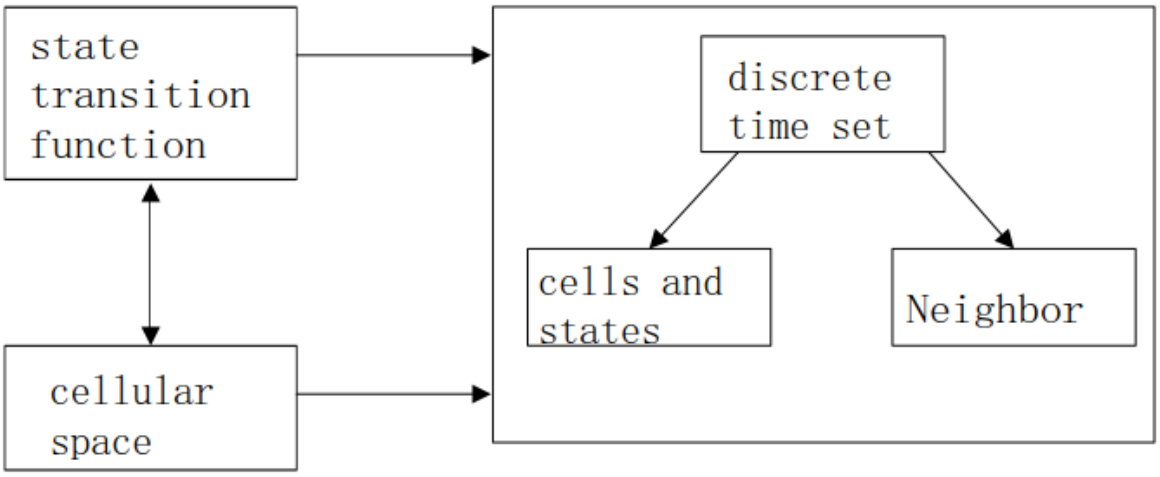

Fig 10 Cellular Automata structure diagram

3.6 Fire scene setting

There is no such thing as a duplicate fire scene in the world; each fire has its own distinct fire growth process and smoke spread scenario; in other words, each actual fire has its own distinct fire scene. The fire scene must be set based on the fire's growth process and building features, the predicted risks induced by the fire, and the content of certainty and

unpredictability (including historical data and statistical analysis, data of the actual fire process, and fire test results). data) that must be determined。 Due to the unpredictability of the fire scene that may occur in the structure, only the intrinsic qualities of the building itself and the typical fire scene with the greatest fire risk may be considered while creating the fire scene. Personnel status, use status, structure, and fire protection measures, for example, are all established in specific areas. It is crucial to evaluate ignition sources, the type and structure of combustibles, ventilation conditions, and the characteristics and locations of interior inhabitants while interpreting critical hazard information. The dynamic process of the formation, development, and spread of fire smoke once a particular number of combustibles in the structure is burned should be depicted in the fire scene. Microscopically, it is the mechanism through which the mass, momentum, energy, and composition of the burning substance are conserved. As seen in Figure 3.2, the entire fire process may be separated into three stages: early development, full combustion, and weakening.

Every fire has a different fire development and smoke spread scenario, or in other words, every actual fire has a different fire scene. There are no recurring fire situations in the universe. The fire scene must be established in accordance with the building's features, the fire's progression, the risk it poses, and the degree of certainty and unpredictability in the situation (including historical data and statistical analysis, data of the actual fire process, and fire test results).) must be established. Only the intrinsic characteristics of the building itself and typical fire scenes with the greatest fire risk may be taken into consideration when constructing fire scenes due to the unpredictability of fire scenes that can occur in structures. For instance, certain regions have been designated for people conditions, usage circumstances, constructions, fire protection measures, etc. It is crucial to consider ignition sources, the kind and structure of combustibles, ventilation conditions, and the identification and position of the persons within when assessing important hazard information. The fire scene should show the dynamic process of the formation, development, and spread of fire smoke after the combustion of a certain number of combustibles in the structure. It is the process that keeps the mass, momentum, energy, and composition of burning matter all preserved on a tiny scale. The entire fire process can be divided into three stages: early development, full combustion and weakening. Initial stage: In the initial stage, the combustion range of the fire is generally not large, and there is only a high temperature near

the burning area. The temperature in other areas in the building is lower, and the content of toxic and harmful gases produced by the combustion is also relatively low, and the fire develops. Relatively slow and relatively safe. Therefore, the initial stage is the best time for fire fighting and personnel evacuation. Comprehensive development stage: Following the initial stage, the speed of the fire's development will sharply increase, which will cause the fire's scope to quickly spread, the building's temperature to quickly rise, the amount of oxygen in the air to quickly decrease, and the production and spread of toxic and harmful substances to happen quickly. Additionally, the structure's bearing capacity will decline as a result of the influence of persistently high temperatures, and the building may potentially collapse partially or completely. Flashover and explosion are more likely to happen in a structure with a lot of combustible and explosive components. If employees are not properly evacuated before to flashover and explosion, survival may be challenging. Extinguishing stage: The fire will reach this stage after it has reached its maximum potential. In the extinguishing stage, the early combustion is still quite strong. Now, due to extended exposure to high temperatures and the cooling impact of fire fighting equipment, caution should be taken to avoid the building from cracking, tilting, or collapsing. Once combustion has spread widely, the number of combustibles and oxygen in the building will gradually diminish, the fire's burning rate will slow down, the temperature within the structure will gradually decline, and the fire will gradually stabilize until it is extinguished. Along with the development of the fire, the building's occupants were evacuated. Safe evacuation is getting everyone out of the building before the fire becomes bad enough to jeopardize life. Personnel evacuation primarily entails these three stages: awareness, response, and action. The essential requirement is that the available time must be more than the required safety time RSET. The available safe evacuation time and the necessary safe evacuation time are referred to as ASET and [23] respectively. The available safe evacuation time, or ASET, is the interval between the start of the fire and the point at which it poses a hazard to people's lives. High-temperature flue gas that is poisonous and damaging is the biggest danger to the safety of the crew in tunnel fires. The flue gas temperature, CO concentration, oxygen concentration, and visibility at the height of the personnel's face are often used to determine the level of fire hazard to personal safety. The standard height range is 1.2-1.8m[24]. The following factors [25] are often used to determine whether an area is safe for evacuation:

a) It is essential to make sure that the flue gas temperature at the height of the human eye is lower than 80° C because flue gas temperatures greater than 80° C would result in burn injuries to human organs. b) Healthy people will develop nausea and convulsions after 45 minutes of exposure to CO levels above 800 ppm, go unconscious within 2 hours, and pass away within 3 hours. Therefore, it's important to make sure that the CO concentration at eye level, or 800ppm, or 810-4mol/mol, is below;

b) Under typical conditions, the atmosphere contains 20.9% oxygen. The human body will exhibit hypoxic symptoms from insufficient oxygen intake when the oxygen content is less than 18%, and it may even become immobile. Therefore, it's imperative to make sure that the oxygen concentration is more than 18% at the height of the human eye; d) Personnel must be able to leave the area safely and in an area with adequate lighting. The capacity of personnel to move will be greatly hampered when the smoke produced by combustion grows and visibility is less than 10m, which is exceedingly unfavorable for evacuation. Therefore, it is essential to guarantee that visibility is better than 10 meters above ground.

The required safe evacuation time, or RSET, is the interval between the beginning of the fire's ignition and the evacuation of all workers to a safe location. The three steps that make up the personnel evacuation procedure are as follows: a) The awareness stage, whose duration is often denoted by Td, refers to the time between the beginning of the fire source's burning and the moment when occupants of the building become aware of an irregularity. the length of the building and the length of the awareness phase.

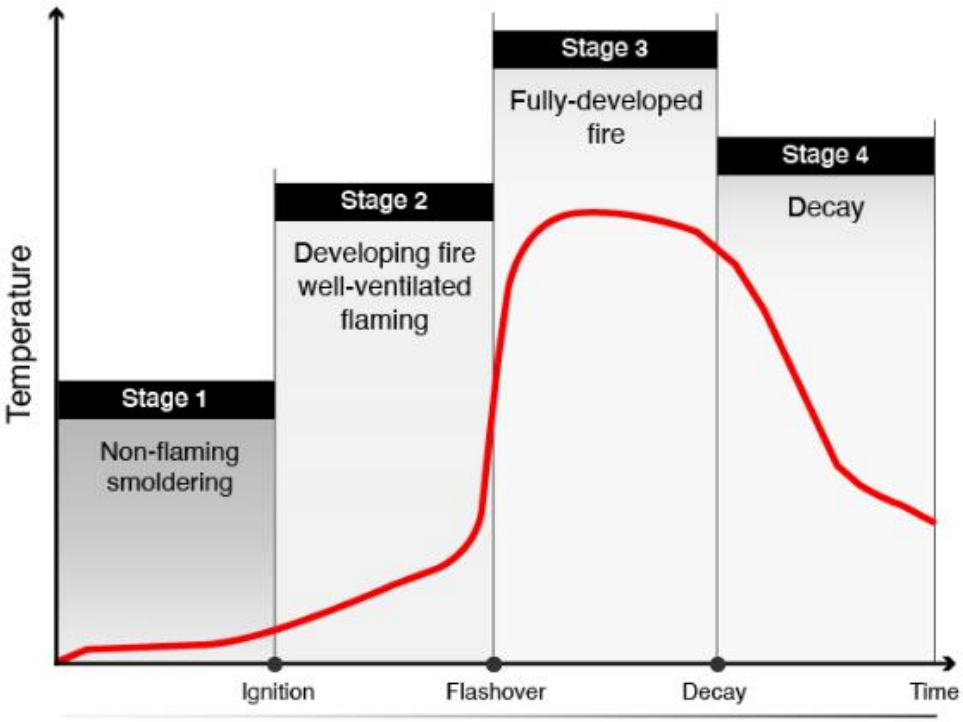

Figure 11. The fire development process

When creating fire situations, several key aspects impacting fire growth should be addressed.

(1) Influence of building structure: The growth of fire will be greatly influenced by different building constructions. For example, timber structures are more prone to fire than concrete structures. (2) Influence of building use functions: Different types of fires are generated by different building use functions. Fires in petrol stations, for example, are typically caused by combustible chemicals such as oil products, but fires in conventional residential structures are more likely to be caused by age and short circuits in wiring. (3) The influence of external environmental elements on the development of fires: structures Different geographical locations and climatic conditions will have a stronger impact on the development of fires. For example, sunny days are more likely to cause fires than rainy days, and downwind speeds up the spread of flames and smoke; (4) Influence of building fire protection facilities: sprinkler systems, mechanical smoke extraction facilities, and so on will all have an effect on the development of the fire. Determine the backdrop of the fire, including building construction, ventilation and weather conditions, etc., the number and distribution of primary and secondary combustibles, and interior personnel circumstances, among other things. According to the different types of fire sources, the fire scenes are

divided into fixed, extended and explosive fire sources. This paper selects the fixed fire scene.

3.7 Examination of simulation results when the fire source is on the main floor

3.7.1 The Process of Smoke Spread

The study of the process of smoke spread in buildings is the foundation for making an accurate judgment on the development of the fire during the fire rescue process, designing an effective smoke prevention and exhaust system, and evacuating personnel in a reasonable manner during the rescue process. In general, the combined action of the chimney effect, buoyancy, expansion force, and external wind in a building fire will cause smoke to spread throughout the structure. The smoke dispersion mechanism in large-space structures, such as gymnasiums, differs from that in typical buildings. Figure 3.3 depicts the spread of smoke at various stages when the fire source is located on the gymnasium's central level. The simulation findings reveal that the smoke in the gymnasium impeded mobility following the fire. When the fire source is in the middle of the building, the interior gas temperature gradient and density gradient might allow the hot flue gas to rise vertically in the first stage because the density of the smoke is less than that of the cool air. Due to building space constraints, hot flue gas will expand over the ceiling under the effect of expansion force (as shown in Figure 3.3a). Figure 3.3 depicts the spread of smoke at various stages when the fire source is located on the gymnasium's central level. The simulation findings reveal that the smoke in the gymnasium impeded mobility following the fire. When the fire source is in the middle of the building, the interior gas temperature gradient and density gradient might allow the hot flue gas to rise vertically in the first stage because the density of the smoke is less than that of the cool air. Due to building space constraints, hot flue gas will expand over the ceiling under the effect of expansion force (as shown in Figure 3.3a).

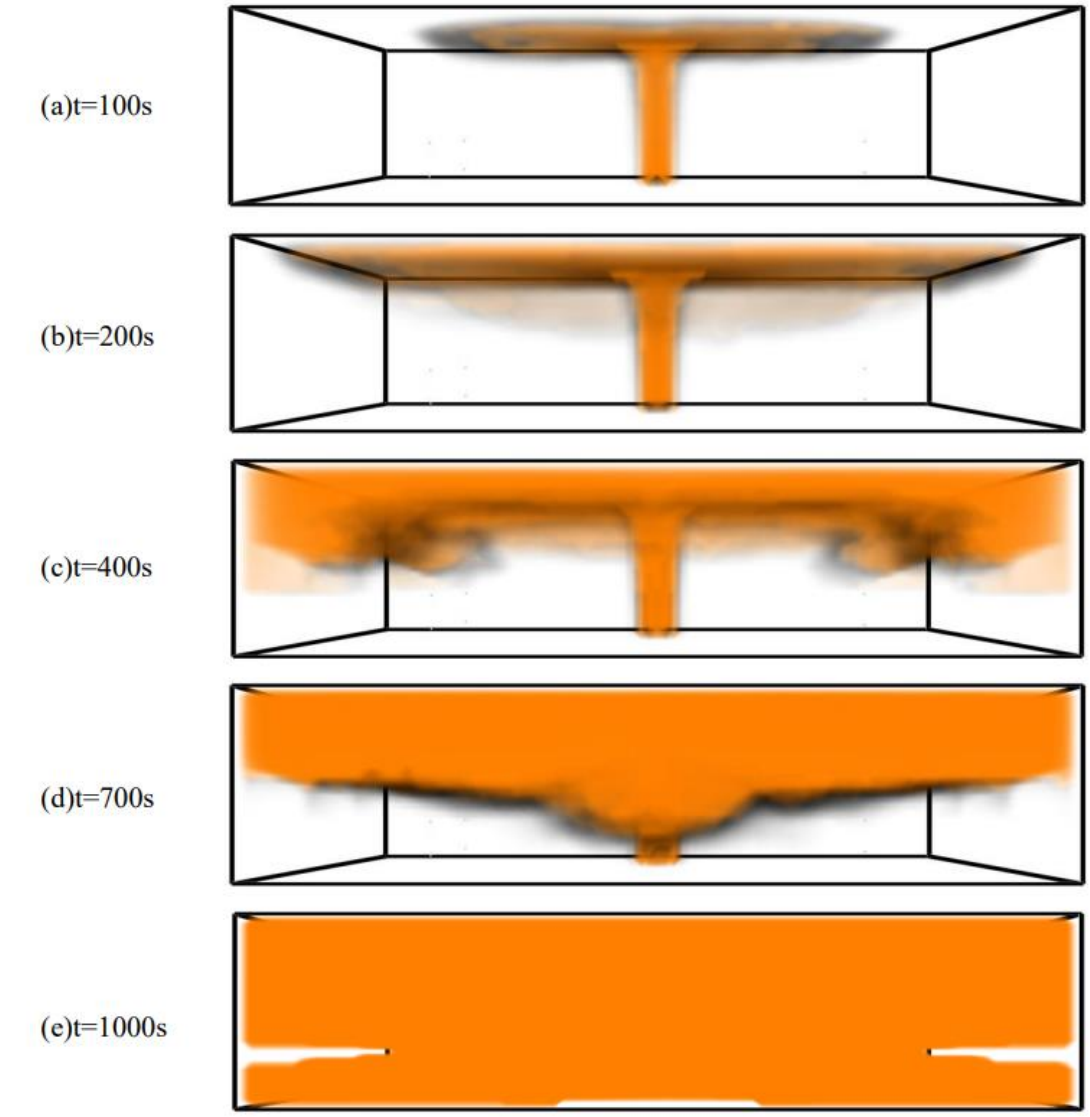

Figure 12. The smoke spread situation of the different time when the fire located in the central floor

4. University gymnasium evacuation simulation

4.1 Cellular Automata Population Evacuation Model

This section describes and quantifies the factors that have a greater impact on personnel emergency evacuation summarized in Chapter 2 through mathematical formulas. The specific approach is to first define each factor separately, and finally combine these factors with the theory of cellular automata to consider their overall impact. The basic parameters of the model are defined as follows:

(1) Cell: It is an abstract expression of terrain, and the movement of pedestrians is

simulated by the movement of cells between cells

a. The size of each cell is 0.4m*0.4m corresponding to the real space;

b. Each cell has attributes, mainly including occupation value, priority, coordinate value, boundary attribute, etc.

(2) Occupancy value: If the cell is not occupied by people or obstacles, its occupancy value is 0, otherwise it is 1. Long-term fixed obstacles or immovable cells have a value greater than 1. When the cell value is not 0, pedestrians cannot reach this cell. Meanwhile, 0 represents a wall, 1 represents a pedestrian, 2 represents a space, and numbers 3 and above represent exits. Consecutive exit squares have the same value, and different exits have different values;

(3) Priority: Priority P is used to describe the behavior of pedestrians tending to choose the nearest exit. In the two-dimensional cell space, each cell Ii has a coordinate value (XIi, YIi), and the exit Ji has a coordinate value (XJi, YJi), and the coordinate value is in centroid coordinates. Each cell in the evacuation space has a priority P∈[0,1], the priority value of the exit is 1, and the priority calculation formula of the cell is shown in 3-1:

(4) Dangerous value: For emergencies such as fire, flood, and crowd stampede, the dangerous cell points will spread to the surrounding area over time. The cell points that are not in the dangerous area in the initial state, and the high-risk cells in the neighborhood The greater the number of points, the greater the probability that the risk will become higher in the next time step. Dangerous value Dan is used to describe these situations. By setting the risk degree rules, the 01bfs algorithm based on the double-ended queue is used to quickly calculate the risk degree of each grid, so that the cells spontaneously tend to the direction with lower risk degree to simulate the personnel evacuation model.

The 01bfs algorithm based on the double-ended queue is carried out with each exit as the starting point. Using this method, the risk of each space can be calculated within (number of empty squares * number of exits); The BFS method (also known as breadth-first search) is one of the simplest graph search algorithms, and it serves as the template for many key graph algorithms. Dijkstra's single-source shortest path method and Prim's minimal spanning tree algorithm are both breadth-first search algorithms. Its alias is also known as BFS, and it is a blind search strategy whose goal is to methodically expand and

inspect all nodes in the graph to locate results. The 01bfs algorithm's function is to identify the shortest path in the graph with just two weight edges. If our graph only contains two types of edges, 0 and 1, (1 can also be any positive number). We may use a double-ended queue to replicate the priority queue in dij every time an element is removed from the head of the queue, and if the edge weights are extended to 0, the element is placed at the head of the queue. If the extended edge weight is 1, it gets moved to the bottom of the queue.

in the specific calculation process. First, record all squares with a risk of -1. Then set the exit position according to the site survey of the gymnasium, and record the current exit number as 3. After initializing the queue, add any squares that belong to an exit to the head of the queue with a risk of 0. Take out the subscript stored in the head of the queue and mark it as the current grid. Traverse and scan 8 meshes around the current mesh, record as the target mesh. If both the target square and the current square belong to the current exit square, the expected risk of the target square is 0, otherwise the expected risk of the target square is the risk of the current square + 1. If the existing risk of the target hex is -1 or the existing risk is greater than the expected risk, set its existing risk to the expected risk and join the queue: if the expected risk is 0, add it to the head of the queue, otherwise add it to the queue the tail. Returns 4 if the queue is not empty. If there is an exit that has not been visited, increment the exit number by 1 and return 3, otherwise end.

The grid order from low risk to high risk is obtained by sorting, which is convenient for traversal. Add people to the blanks of the map according to the established rules to generate random locations. Scan all grids in order of risk from low to high. If there is one person in the current grid, calculate the forward probability of the unoccupied space of 9 grids (including yourself) around it, and decide the next person according to this probability. momentary position. No change after reaching the exit. Displays the map status at the current moment. Count the number of people who have not yet been exported. Returns 5 if not 0.

4.2 Analysis of results

The initial operation of the core code and the result are as follows (set the length and width of the room to be 200, and there are two exits on the right wall, each with a width of 5).

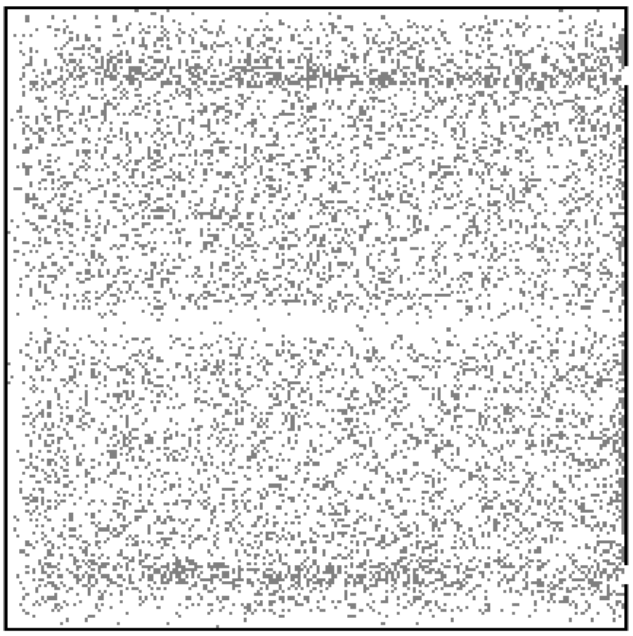

Figure 1. Simulation diagram of personnel evacuation based on cellular automata (1)

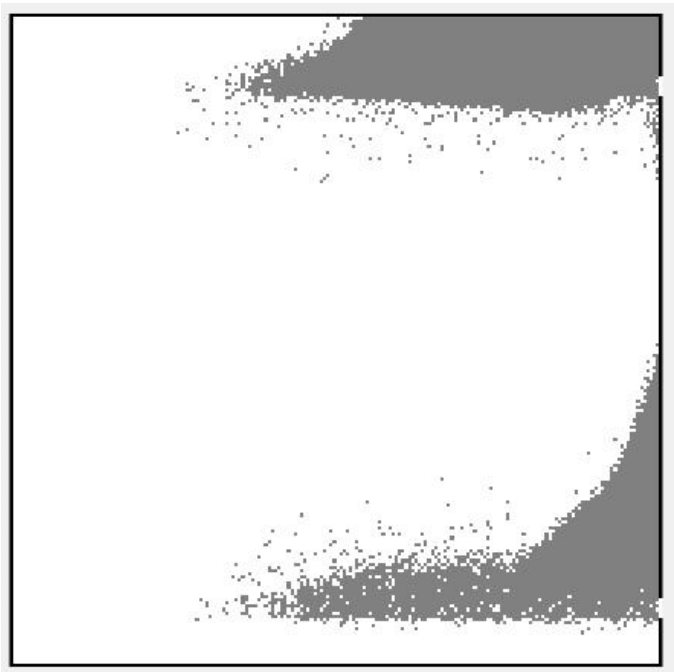

Figure 1. Simulation diagram of personnel evacuation based on cellular automata (2)

4.4 chapter summary

In this chapter, a gymnasium is chosen as the study object, and a model is developed to simulate the spread of smoke in the gymnasium in the event of a fire. The following are the primary conclusions: (1) Because the fire source is in the middle of the building, the high-

temperature hot smoke is influenced by the structure. The buoyancy effect caused by the inner gas's temperature and density gradient grows vertically, resulting in the ceiling jet phenomena. Because the ceiling jet is constrained by the surrounding walls, smoke gathers on the lower surface of the ceiling. The gas began to descend, creating a coating of scorching smoke over the pavilion. The concentration and thickness of the smoke layer rose as the fire spread, eventually filling the whole space; all workers were evacuated in 53.041507 seconds.

The best design method for the breadth of the emergency escape. The safety exit's passing capacity should be consistent with the evacuation walkway's passing capacity. This is in accordance with the "Code for the Design of Sports Buildings." It is simple to produce evacuation at the exit if the breadth of the exit is not correctly planned. Because of the bottleneck, the middle row of stands with backrests should pay special attention to the width of the exit, which should not be set too narrow. The most effective design technique for the number of safety exits When the overall width of the safety exits is the same, the exits should be placed on both sides of the gymnasium and should be maintained clear. When the entire width of the safety exits is the same, increasing the number of safety exits improves evacuation efficiency significantly.

The stadium stands in colleges and universities are characterized by high concentration of people, concentrated use time, and frequent events. If the evacuation design is not properly designed, it is very likely to cause safety accidents such as crowding and stampede. This paper takes the university stadium area where a large number of people are concentrated and the risk of safe evacuation is high as the research object, and proposes a simulation method for the evacuation of stadium stands in colleges and universities based on cellular automata.

5.Conclusion

Under the operation characteristics of complex development of university gymnasium functions and high-density user gathering, once a public safety incident occurs, evacuation behavior may result in immeasurable consequences. Taking the university gymnasium as the research object, it is of great significance to discuss the safety evacuation of its personnel. It is an essential step to refer to previous researches of scholars at home and abroad. above research report. For university gymnasiums with many characteristics, carrying out research on personnel safety evacuation is conducive to reducing personnel and property losses in the

event of emergencies, and ensuring the safety of school teachers, students and related staff. .

It can be seen from the above related research that university gymnasiums have become an important part of gymnasium types due to their special geographical location, targeted users and diversified use methods. Under the operating background of large space span, complex use flow lines and dense users, it is necessary to carry out special research on the safe evacuation of university gymnasiums. Based on the cellular automata model, the personnel evacuation in the fire situation of the university gymnasium is studied. Through the simulation of the model, the behavior of the personnel evacuation can be misunderstood, and the multi-level data reference can be provided for the subsequent research on the safe evacuation design strategy. The preface said that artificial intelligence technology can be combined with artificial intelligence technology and applied to fire crowd evacuation simulation, which can more realistically reproduce the actual situation of crowd evacuation when a fire occurs, and show the characteristics and individual behaviors of evacuated people. .This can more clearly simulate the process of evacuation of people in the building when a fire occurs, and it is easier to discover the hidden safety hazards exposed by the building on this side, and further formulate and formulate more practical guidance. Modify the evacuation plan. The existing literature has the following shortcomings:

First, the degree of excavation of the spatial morphological characteristics and traffic organization patterns of university gymnasiums is insufficient. Existing research mostly focuses on the operation mode of university gymnasiums, and lacks an in-depth discussion of the differences in spatial composition from an architectural perspective. The uniqueness of university gymnasiums in terms of construction environment, service population and functional requirements brings new demands to the space composition.

At the same time, most of the existing studies use evacuation simulation platform as the research method, which lacks the collection and feedback of the behavioral needs of specific groups. It is difficult for the existing evacuation simulation platforms and evacuation models to integrate and adjust with the behavioral characteristics of specific crowds. Due to the special needs of the university gymnasium space form, user population and other factors, it is easy to produce deviations in the evacuation research results.

Finally, the existing safety evacuation strategies are mostly aimed at the selection of

building space, but there is still potential for research on the potential impact of space form on crowd evacuation behavior and the needs of evacuation crowd on the physical environment during disasters. In the research on safe evacuation of university gymnasiums, comprehensive consideration of space composition, evacuation behavior and environmental requirements during disasters will help to expand the research scope of safe evacuation design strategies.

References

[1] Lu Chaofeng. Research on the design strategy for the diversification of architectural functions of university gymnasiums [D]. Beijing University of Architecture and Technology, 2016.

[2] Norman E G. A decision model for recommending which building occupants should move where during fire emergencies[J]. Fire Safety Journal, 2016,80.

[3] Guo Fang. Research on performance-based evacuation design of large gymnasium seats based on crowd simulation [D]. Harbin Institute of Technology, 2015.

[4] Hu Yuling, Wang Feiyue, Liu Xiwei. Research on Evacuation Strategy of High-rise Building Fire Based on ACP Method [J]. Chinese Journal of Automation, 2014,40(02):185-196.

[5] Binbin W.Comparative Research on FLUENT and FDS's Numerical Simulation of Smoke Spread in Subway Platform Fire[J].Procedia Engineering,2011,26:1065-1075.

[6] Guo Wei. Research on the safe evacuation of gymnasium personnel [D]. Xi'an University of Architecture and Technology, 2009.

[7] Cai Y.,Lin Z.-y.,Mao J.,et al.Study on Law of Personnel Evacuation in Deep Buried Metro Station Based on the Characteristics of Fire Smoke Spreading[J].Procedia Engineering,2016,135 :544-550.

[8] Lin Fang. Research on the Function Design Strategy of Shanghai University Gymnasium [D]. Shanghai Jiaotong University, 2013.

[9] Yu Hongye. Architectural Design of Student Activity Centers in Colleges and Universities in Guangzhou [D]. South China University of Technology, 2016.

[10] Wang Wei. Analysis of the current situation of gymnasiums in general colleges and universities in Heilongjiang Province [D]. Harbin Institute of Physical Education, 2016.

[11] Zhang Deng. Research on Intensive Design Strategy of Sports Venues in Urban Middle Schools [D]. South China University of Technology, 2019.

[12] Sun Shiming. Research on the docking problem and optimization of the opening and use of sports venues in Wuhan Institute of Physical Education [D]. Wuhan Institute of Physical Education, 2015.

[13] Wang Pengfei. Research on fire simulation and risk prediction of ancient brick

and wood structures (groups) [D]. Chang'an University, 2018.

[14] Lu Xiaojie. Numerical experimental study on fire smoke motion control and personnel evacuation in a large wholesale mall [D]. Guangxi University, 2016.

[15] Fan Weicheng, Sun Jinhua, Lu Shouxiang. Fire Risk Assessment Methodology [M]. Beijing: Science Press, 2004.

[16] Huo Ran, Li Yuanzhou, Yu Minggao. Preliminary study on mechanical smoke exhaust of large space building fires [J]. Fire Science and Technology, 2001, 04: 3-5.

[17] Li Xinyi. Research on Numerical Simulation of Large Space Building Fire [D]. Chongqing University, 2003.

[18] Liu Fang, Fu Xiangzhao, Zheng Jie, etc. Numerical simulation of smoke flow in atrium fire [J]. Journal of Safety and Environment, 2001, 05: 33-36.

[19] Chai Pan. Research on fire scene setting of high-rise buildings [D]. Chongqing University, 2014.

[20] Wang Liubing. Performance-based design of smoke prevention and exhaust systems for large commercial complexes [D]. Xi'an University of Architecture and Technology, 2015.

[21]Jiang Hongxia. Research on Sports Value [D]. Zhejiang University, 2017.

[22] Rao Yuan. From the Asian Games in Tehran to the Asian Games in Beijing: The Promotion and Reflection of New China in the History of the Asian Games [J]. Journal of Chengdu Institute of Physical Education, 1990(01):19-24.

[23] Lu Chaofeng. Research on the design strategy of architectural function diversification of university gymnasiums [D]. Beijing University of Architecture, 2016.

[24]Norman E G. A decision model for recommending which building occupants should move where during fire emergencies[J]. Fire Safety Journal, 2016,80.

[25] Guo Yulian. Research on the Construction of the Operational Mechanism of Sports Cultural Power in the Field of College Education [D]. Northeast Normal University, 2016.

[26] Cheng Yafei. Research on Comprehensive Evaluation of Sports Work in Colleges and Universities [D]. Henan University, 2016.

[27] Li Jianfeng, Liu Mao, Sui Xiaolin. Research on social risks of crowd gathering in public places [J]. China Engineering Science, 2007(06):88-93.

[28] Chen Qingdong. Simulation research on fire emergency evacuation of large stadiums [D]. Tianjin University of Technology, 2017.

[29] Yu Zili. Research on fire field simulation and personnel evacuation of column-shell roof gymnasium [D]. Harbin Institute of Technology, 2018.

[30] Stubenschrott M , Kogler C , Matyus T , et al. A Dynamic Pedestrian Route Choice Model Validated in a High Density Subway Station[J]. Transportation Research Procedia, 2014, 2:376-384.

[31] Li She. Research on the Complexity of Building Functions of University Gymnasium [D]. North China University of Technology, 2014.

Appendix

```
clc; clear;
tic
n=200;
map=zeros(n);
map(2:n-1,2:n-1)=2;
map(20:25,n)=3;map(n-20:n-15,n)=4;
colormap([0.8 0.8 0.8;1 1 1;1 0 0;0 1 1;0 1 1]);
danger = cal_danger(map);
danger_order = cal_danger_oreder(danger);
map = add_people(map, 0.2,1);
[K,t] = move(map, danger, danger_order);
Toc

function map = add_people(map,rate,rate2)
   rnd = rand(size(map));
   for i = 1:size(map,1)
      for j = 1:size(map,2)
         if rnd(i,j)<rate && map(i,j)==2
            map(i,j)=1;
         end
      end
   end
end

function danger = bfs_01(map,danger,st)
   n = numel(find(map~=0));
   lef=n; rig=n; que = zeros(n*2,2);
   que(rig,:)=st; rig = rig+1;
   danger(st(1),st(2)) = 0;
   while(lef<rig)
      ua=que(lef,1); ub=que(lef,2); lef=lef+1;
      go=[0,-1; 0,1; -1,0; 1,0];
      for i = 1:size(go,1)
```

```
            va=ua+go(i,1); vb=ub+go(i,2);
            if(map_at(map,va,vb)>=1)
                nd = danger(ua,ub)+2;
                if(danger(ua,ub)==0 && map(ua,ub)==map(va,vb))
                    nd = 0;
                end
                if(danger(va,vb)==-1 || danger(va,vb)>nd)
                    danger(va,vb) = nd;
                    if(nd==0)
                        lef=lef-1; que(lef,:)=[va,vb];
                    else
                        que(rig, :)=[va,vb]; rig=rig+1;
                    end
                end
            end
        end
    end

end


function danger = cal_danger(map)
    danger = -ones(size(map));
    for sign = [3 4]
        [a,b] = find(map==sign);
        danger = bfs_01(map,danger,[a(1),b(1)]);
    end
    go = [0,-1; 0,1; -1,0; 1,0];
    for ua = 1:size(map,1)
        for ub = 1:size(map,2)
            if(map(ua,ub)>=0)
                flag = 0;
                for k=size(go,1)
                    va=ua+go(k,1); vb=ub+go(k,2);
                    if(map_at(map,va,vb)==0)
```

```
                flag=1;
                break;
            end
        end
        if(flag)
            danger(ua,ub)=danger(ua,ub)+0;
        end
    end
  end
end

function danger_order = cal_danger_oreder(danger)
  n = numel(find(danger~=-1));
  danger_order = zeros(n,3); k = 1;
  for i = 1:size(danger,1)
    for j = 1:size(danger,2)
      if(danger(i,j)~=-1)
        danger_order(k,1) = i;
        danger_order(k,2) = j;
        danger_order(k,3) = danger(i,j);
        k = k + 1;
      end
    end
  end
  [~, pos] = sort(danger_order(:,3));
  danger_order = danger_order(pos,1:2);
end

function res = map_at(map,a,b)
  if(a>0&&b>0&&a<=size(map,1)&&b<=size(map,2))
    res = map(a,b);
  else
    res = 0;
  end
```

```
end

function [] = map_show(map)
    imshow(map,'InitialMagnification','fit','DisplayRange',[0,2]);
    %imagesc(map);
    hold on;
end

function [K,t] = move(map, danger, danger_order)
    K = zeros(4000,3); t = 0;
    map_show(map);
    sel = zeros(1,27);
    while(size(find(map==1),1))
        t=t+1;
        go = [0,-1; 0,1; -1,0; 1,0; 1,1; 1,-1; -1,1; -1,-1; 0,0];
        for i = 1:size(danger_order,1)
            ua = danger_order(i,1); ub = danger_order(i,2);
            if map(ua,ub)~=1
                continue;
            end
            mx = 0; cnt = 0;
            for j = 1:size(go,1)
                va = ua+go(j,1); vb = ub+go(j,2);
                if(map_at(map,va,vb)>1)
                    mx = max(mx,danger(va,vb));
                end
            end
            for j = 1:size(go,1)
                va = ua+go(j,1); vb = ub+go(j,2);
                if(map_at(map,va,vb)>1)
                    for k = 1:mx+1-danger(va,vb)
                        cnt = cnt+1; sel(cnt)=j;
                    end
                end
            end
```

```
            if(cnt==0)
                continue;
            end
            target = sel(unidrnd(cnt));
            va = ua+go(target,1); vb = ub+go(target,2);

            map(ua,ub)=2;
            if(map(va,vb)==2)
                map(va,vb)=1;
            end
        end
        map_show(map);
        pause(0.01);
    end
end
```