1809810

by David Thomas

FILE	16526_DAVID_THOMAS_1809810_179202_2119604203.PDF (1.13M)		
TIME SUBMITTED	28-APR-2021 10:31AM (UTC+0100)	WORD COUNT	5673
SUBMISSION ID	150796207	CHARACTER COUNT	35911

Course:	HND Electrical and Electronic Engineering
Module:	SGEE5009 Control Engineering
Assignment:	Control Systems Analysis, Modelling and Simulation.
Name:	David Mathew Thomas
University number:	1809810
Date submitted:	29-04-2021
Word count:	1731

Contents

1. Executive Summary 6

2. Transient Response of a Second Order System 7

3. Control System Modelling 9

4. Block Diagram Reduction 12

5. Frequency Response Methods 15

6. Digital Control Systems 18

7. Conclusions & Recommendations 20

8. References 21

9. Appendix 22

9.1. Transient Response of a Second Order System 22

9.2. Control System Modelling 24

9.3. Block Diagram Reduction Method 28

9.4. Frequency response Method 34

9.5. Digital Control Systems 35

Table of Figures

Figure 1 - Second Order System - Matlab Simulation 8
Figure 2 - Control System Modelling - Argand Diagram 9
Figure 3 - Control System Modelling - Value of K 10
Figure 4 - Control System Modelling - Critical Stability Response 11
Figure 5 - - Block Diagram Reduction - Poles & Zeros 12
Figure 6 - Block Diagram Reduction – Root Locus Diagram 13
Figure 7 - Block Diagram Reduction - Simulink Model 14
Figure 8 - Block Diagram Reduction - Simulink Model Response 14
Figure 9 - Frequency Response Method - Matlab Response 16
Figure 10 - Digital Control System - Block Diagram 18
Figure 11 - Digital Control System - System Response 19
Figure 12 - Digital Control System - Response Values 19
Figure 13 - Second Order System 22
Figure 14 - Second Order System - Matlab Simulation with Matlab Code 23
Figure 15 - Control System Modelling - Matlab Code for Poles & Zeros 25
Figure 16 - Control system Modelling - Matlab Poles & Zeros Values 25
Figure 17 - Control System Modelling - Poles & Zeros Root Locus 25
Figure 18 - Control System Modelling - Matlab Code for Root Locus 26
Figure 19 - Control System Modelling - Simulink Model 26
Figure 20 - Control System Modelling - Stable Response 27
Figure 21 - Control System Modelling - Unstable Response 27
Figure 22 - Block Diagram Reduction Method - Block Diagram 28
Figure 23 - Block Diagram Reduction Method - Step 1 28
Figure 24 - Block Diagram Reduction Method - Step 2 29
Figure 25 - Block Diagram Reduction Method - Step 3 29
Figure 26 - Block Diagram Reduction Method - Step 4 30
Figure 27 - Block Diagram Reduction Method - Step 5 30
Figure 28 - Block Diagram Reduction Method - Step 6 30
Figure 29 - Block Diagram Reduction - Block Diagram Simulink Model 32
Figure 30 - Block Diagram Reduction - Simulink Block Diagram Model Response 32
Figure 31 - Block Diagram Reduction - Transfer Function Simulink Model 33
Figure 32 - Block Diagram Reduction - Simulink Transfer Function Model Response 33
Figure 33 - Digital Control System - Simulink Model 36
Figure 34 - Digital Control System - Stable System Response 37
Figure 35 - Digital Control System - Unstable System Response 37

Table of Tables

Table 1 - Second Order System - Control System Values 7
Table 2 - Second Order System - System Values 7
Table 3 - Second Order System - Calculated Values 7
Table 4 - Second Order System - Calculated & Simulated Values 8
Table 5 - Control System Modelling - Selected Values 9
Table 6 - Control system Modelling - Poles & Zeros Comparison 10
Table 7 - Control System Modelling - Varied Value of K 11
Table 8 - Block Diagram Reduction - Selected Values 12
Table 9 - Frequency Response Method - System Values 15
Table 10 - Frequency Response Method - Response Comparison 16
Table 11 - Frequency Response Method - Response Comparison 16
Table 12 - Digital Control System - System Calculated Values 18

Table of Equations

Equation 1 - Second Order System - Transfer Function 7
Equation 2 - Second Order System – Transfer Function 7
Equation 3 - Control System Modelling - Open Loop 9
Equation 4 - Block Diagram Reduction - Derived transfer function Block 12
Equation 5 - Block Diagram Reduction - Transfer function 12
Equation 6 - Frequency Response Method - Transfer Function 15
Equation 7 - Frequency Response Method - Transfer Function 15
Equation 8 - Digital Control System - Closed Loop Transfer Function 18
Equation 9 - Second Order System - Damping Factor 22
Equation 10 - Second Order System - Damped Frequency 22
Equation 11 - Second Order System - Rise Time 22
Equation 12 - Second Order System - Peak Time 22
Equation 13 - Second Order System - Overshoot Percentage 22
Equation 14 - Second Order System - Settling Time, within +2% 23
Equation 15 - Second Order System - Oscillations During Settling 23
Equation 16 - Control System Modelling - dy Laplace Transform 24
Equation 17 - Control System Modelling - dx Laplace Transform 24
Equation 18 - Control System Modelling - Open Loop Transfer Function 24
Equation 19 - Control System Modelling - Poles Calculation 24
Equation 20 - Control System Modelling - Zeros Calculation 24
Equation 21 - Control System Modelling - Closed Loop Transfer Function 26
Equation 22 - Control System modelling - K Value for Critical Damping 26
Equation 23 - Block Diagram Reduction Method - Substitute for G8 31
Equation 24 - Block Diagram Reduction Method - Substitute for G7 31
Equation 25 - Block Diagram Reduction Method - Substitute for G6 31
Equation 26 - Block Diagram Reduction Method - Substitute for G5 31
Equation 27 - Block Diagram Reduction Method - Transfer Function in G 31
Equation 28 - Block Diagram Reduction - Transfer Function with Selected Values 31
Equation 29 - Block Diagram Reduction - Transfer Function 31
Equation 30 - Block Diagram Reduction - Derived Transfer Function 32
Equation 31 - Frequency Response Method - Gain Calculation 34
Equation 32 - Frequency Response Method - dB Value 34
Equation 33 - Frequency Response Method - Transfer Function 34
Equation 34 - Digital Control System - Laplace Transform of ZOH 35
Equation 35 - Digital Control System - Open Transfer Function 35
Equation 36 - Digital Control System - z Transforms 35
Equation 37 - Digital Control System - Partial fractions 35
Equation 38 - Digital Control System - Closed Loop Transfer Function 35
Equation 39 - Digital Control System - System Stability 36
Equation 40 - Digital Control System - Maximum Sampling Period 36
Equation 41 - Digital Control System - Minimum Sampling Frequency 36

1. Executive Summary

This is an assignment not a project

This project involved the use of mathematical modelling as a means of designing and analysing system behaviour, and the use of simulation and modelling software to provide proof of concept.

The project was spilt into five areas, incorporating the use of various methods that are commonly used to characterize and analyse control systems, each of which involved the deriving of a transfer function in order to provide a simple algebraic equation. For each of the methods, theoretical calculations including the generation of transfer functions, were performed to provide a prediction of system behaviour, following which modelling and simulation software, namely Matlab and Simulink were used to provide verification of the theory.

calculated esults

The first modelling method involved a second order system, predicting response following a change in unit step input, analysing system behaviour such as rise time, number of oscillations and dampened frequency, predicting an underdamped system. All calculated responses were successfully proven using Matlab. A number of methods were used to demonstrate prediction of system stability, the first involving theoretical calculations using Laplace and Argand diagrams to find and plot the poles and zeros, which were then proven using Matlab and the generation of a Root Locus diagram to confirm the calculated point of critical stability of 1.33. A second method involving system stability used theoretical calculation to ascertain maximum sampling periods and minimum sampling frequency from the digital control circuit response, any values above this resulting in instability. Simulation of the digital control system in Simulink proved the calculated stability values of 40mS (period) and 25Hz (frequency). Block diagrams are commonly used to represent control systems however they are inherently complicated. The block reduction method to provide representation in its simplest form was successfully executed during the project. The resultant single transfer function was successfully proven in Simulink, with identical responses on the oscilloscope seen. Confirmation of a stable system was obtained by plotting the predicted poles and zeros on and Root Locus diagram using Matlab where all were positioned in the left-hand plane. The final method used to characterize system response was the frequency response method, which successfully utilized the Matlab to generate a Bode plot where again calculated values, this time relating to frequency values, were correct. Using Matlab, a stable system was confirmed using the phase margin method, instability occurring beyond -90°C

The order doesn't match the brief

assignment

The project successfully achieved it aims, with transfer functions and predicted calculations produced in each method being verified using Matlab and SImulink software. This project proved the value of using such methods predict and analyse control system behaviour

2. *Transient Response of a Second Order System*

For the transient response of a second order system, as shown in appendix 9.1, the selected values of K and A are:

Selected Values for Control System	
K Value	25
A Value	5

Table 1 - Second Order System - Control System Values

The transfer function for the second order system is as follows:

$$T(s) = \frac{G(s)}{1 + G(s)x\ H(s)} = \frac{\frac{25}{s(s+5)}}{1 + \frac{25}{s(s+5)}\ x\ 1} = \frac{25}{s^2 + 5s + 25}$$

Equation 1 - Second Order System - Transfer Function

$$\frac{K\omega n^2}{s^2\ +\ 2\zeta\omega ns\ +\ \omega n^2} = \frac{25}{s^2\ \ 5s\ \ 25}$$ *plus signs are missing*

Equation 2 - Second Order System – Transfer Function

The value's natural frequency value and system gain value are as follows:

Second Order System Values	
ωn^2	25
ωn	5
$K\omega n^2$	25
K	1

Table 2 - Second Order System - System Values

Shown in the table below are the calculated values for the second order system. (See appendix 9.1 for calculations)

Second order System Calculated Values	
Damping Factor	0.5
Damped Frequency (Rad/s)	4.33
Rise Time to 100% of Final Value (seconds)	0.484
Peak Time (Seconds)	0.726
Overshoot (%)	16.3
Settling time, within ±2% (Seconds)	1.6
Number of Oscillations	1.103

Table 3 - Second Order System - Calculated Values

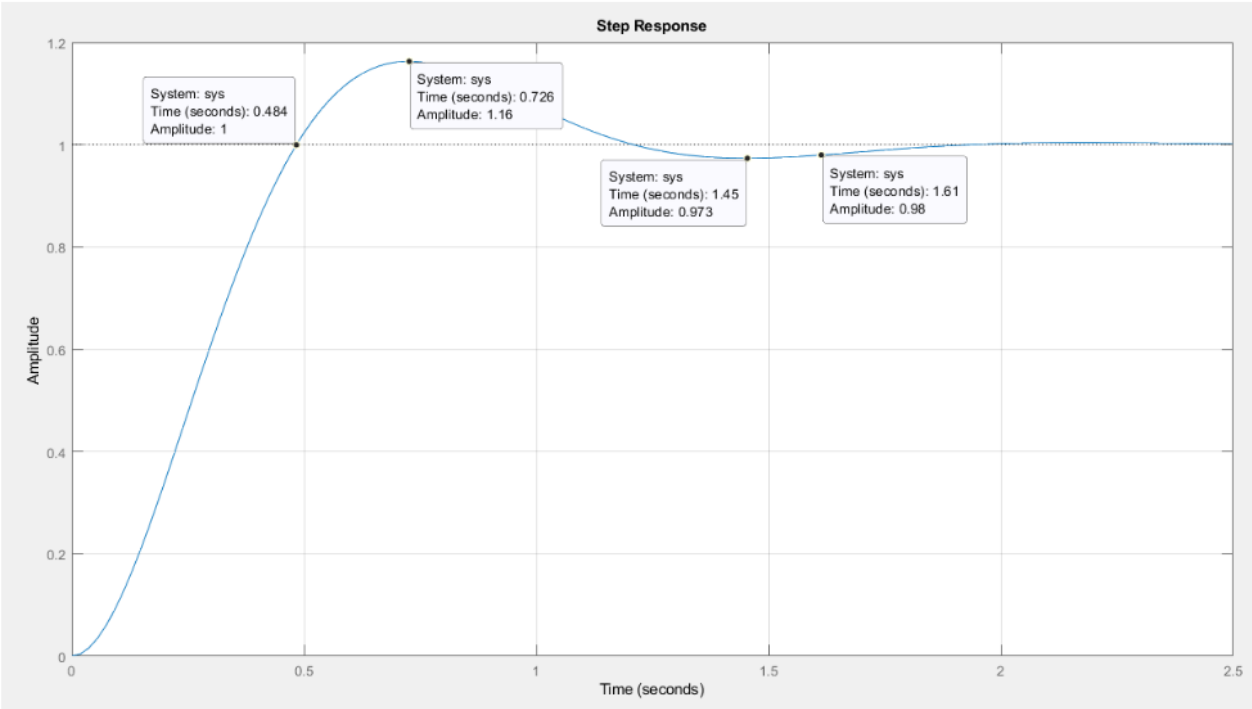

Figure 1 - Second Order System - Matlab Simulation

Second Order System Calculated & Simulated Values		
	Calculated	Simulated
Damping Factor	0.5	0.5
Damped Frequency (Rad/s)	4.33	4.333
Rise Time to 100% of Final Value (seconds)	0.484	0.484
Peak Time (Seconds)	0.726	0.726
Overshoot (%)	16.3	16
Settling time, within ±2% (Seconds)	1.6	1.61
Number of Oscillations	1.103	1.103

Table 4 - Second Order System - Calculated & Simulated Values

Demonstrated from the Matlab simulation, simulated results are either an exact match to or within one decimal of the calculated results, indicating that the calculated results are correct. Where small differences are seen, this can be attributed to rounding of values, in both calculated and simulated figures. From the calculated damping factor, the system response was expected to oscillate for a number of cycles prior to settling as the damping factor was < 1 and greater than 0. Demonstrated on the simulation, the number of oscillations during settling time is proven by dividing the settling time, within ±2% of the response, by the lowest oscillation amplitude value. The damped frequency value is proven by $\frac{1}{Period}\ x\ 2\pi$, with the period being the time taken for the oscillation to complete one full cycle.

3. Control System Modelling

$$\frac{d^2y}{dt^2} + a\frac{dy}{dt} + by = \frac{d^2x}{dt^2} - p\frac{dx}{dt} + qx$$

Equation 3 - Control System Modelling - Open Loop

With initial conditions assumed as zero, an open loop transfer function was derived from a Laplace system defined as Y(s)/X(s), see appendix 9.2 for calculations. Shown in the table below are the selected values for a, b, p and q for the control modelling derived open loop transfer function.

These are not the poles and zero but they do produce them

Control Modelling Values		
Poles	a	4
	b	2
Zeros	p	-3*p = 3 not -3*
	q	5

Table 5 - Control System Modelling - Selected Values

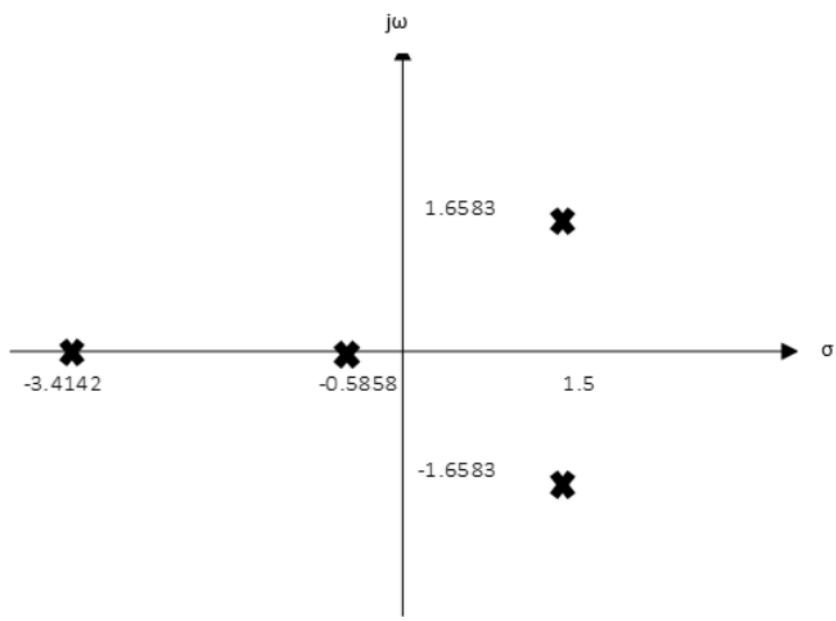

Figure 2 - Control System Modelling - Argand Diagram

From the calculations shown in appendix 9.2, an argand diagram was used to define the positions of the poles and zeros. Using the argand diagram for system analysis, the system is seen to be stable with the poles in the left-hand plane, and also overdamped due the poles being on the real axis.

What value of K would have produced critical damping?

Illustrated above are the control system open-loop transfer function results. The open-loop transfer function was inputted to a step response within Matlab, and the poles and zeros values produced. Illustrated in the table below, both calculated and simulated results for poles and zeros were identical, proving the accuracy of the calculated values. See appendix 9.2 for Matlab illustration

Poles & Zeros Comparison			
Poles		Zeros	
Calculated Poles	Simulated Poles	Calculated Zeros	Simulated Zeros
-3.4142	-3.4142	-3.4142	-3.4142
-0.5858	-0.5858	1.5 - 1.6583	1.5000 - 1.6583

Table 6 - Control system Modelling - Poles & Zeros Comparison

From the closed loop transfer function, see appendix 9.2 for calculations, the value of K was derived. For stability K < 1.333 and for instability K > 1.333. As demonstrated in the image below, the value of K, Gain, is at 1.33 when on the y axis of root locus diagram, demonstrating that the value of critical stability is 1.33, as calculated.

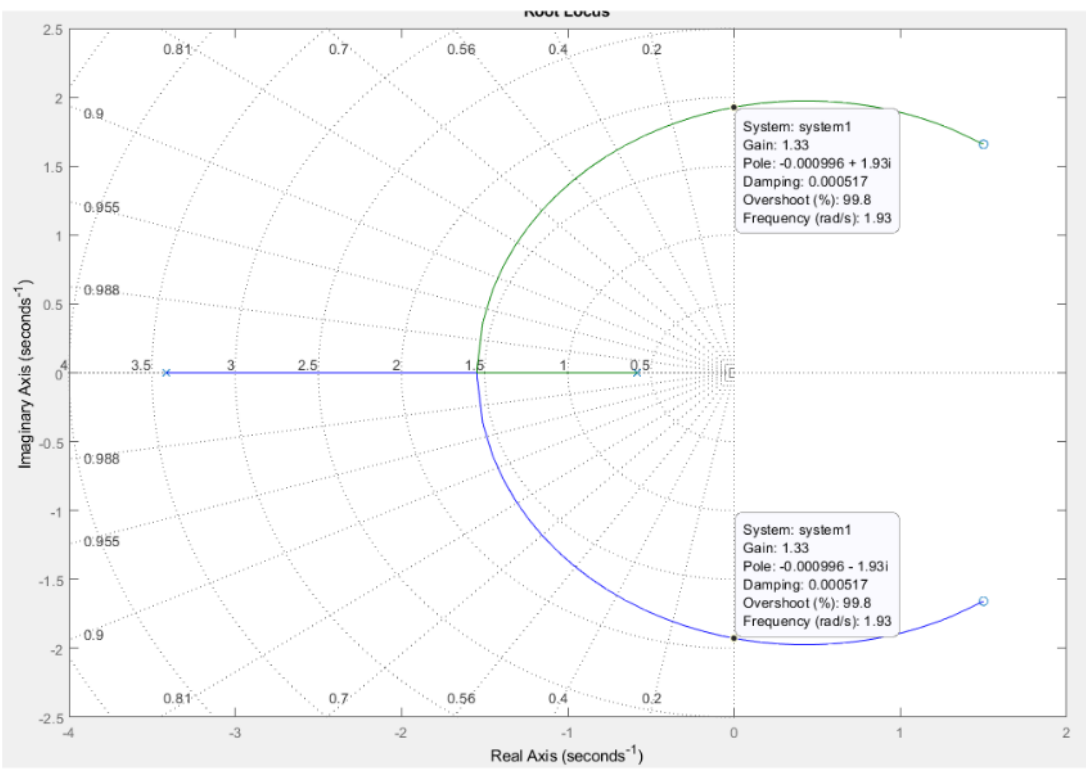

Figure 3 - Control System Modelling - Value of K

Illustrated in appendix 9.2 a Simulink model was built to simulate the system response to confirm the calculated value of critical stability. The value of K, as shown in the table below was varied to demonstrate varied system responses, demonstrating how the control system will respond to differing K (gain) values.

Control System Response to Varied value of K	
Expected System Response	Selected values of K
Stable System	0.6
Critical Stability	1.33333
Unstable System	2.5

Table 7 - Control System Modelling - Varied Value of K

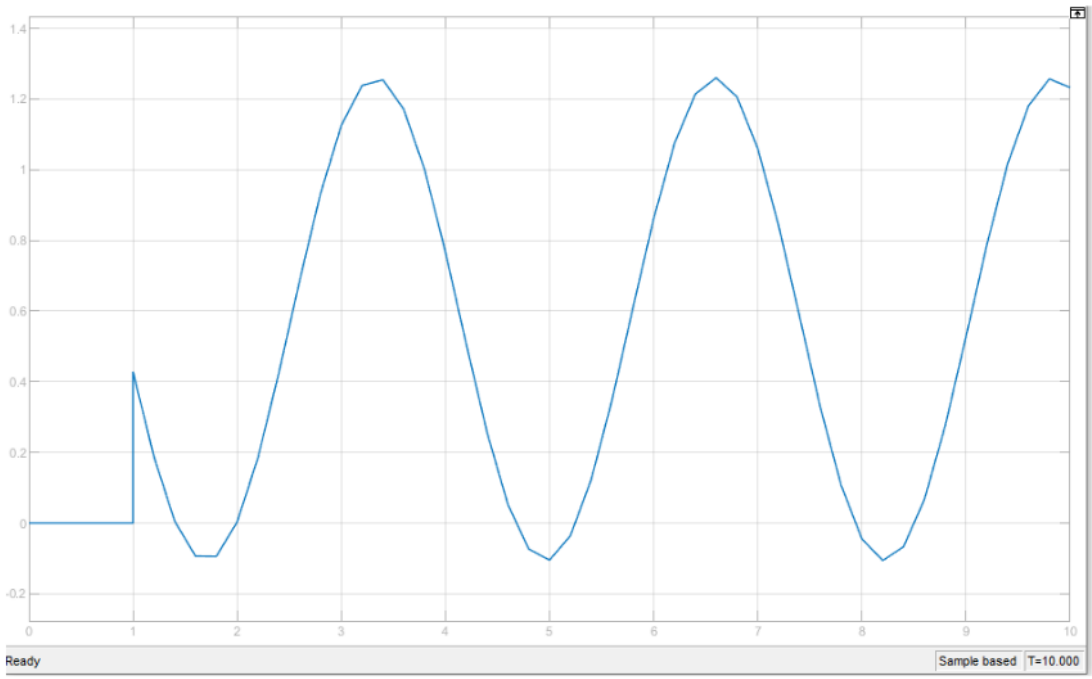

Figure 4 - Control System Modelling - Critical Stability Response

Demonstrated from the Matlab simulation is the critical stability response. See appendix 9.2 for stable and unstable system responses. The simulation confirms the calculated value of K at 1.3333 to be correct. Use of the root locus method to analyse system response allowed demonstration of system stability i.e. whether it was stable or unstable; positioning of the poles in the right-hand plane of the argand diagram equating to a stable system, with position of the poles of an unstable system being in the left-hand plane. The root locus method is also able to illustrate the type of damping the system has, with the poles migrating along the real axis and meeting before becoming underdamped.

4. Block Diagram Reduction

From the block diagram, shown in appendix 9.3, a single transfer function was derived by standard block reduction methods. See appendix 9.3 for block reduction methods used to obtain the single transfer function illustrated below.

$$T = \frac{G1xG3xG4 + G2 - G2xG3xG4xH1}{1 - G3xG4xH1 + H2xG1xG3xG4 + H2xG2 - H2xG2xG3xG4xH1}$$

Equation 4 - Block Diagram Reduction - Derived transfer function Block

the x's are cluttering up the equation and are not needed, use subscripts for the numbers in future

Selected Values for Transfer Function	
G1 Value	6
G2 Value	4
G3 Value	2/(s+1)
G4 Value	1/s
H1 Value	1/(s+1)
H1 Value	16

Table 8 - Block Diagram Reduction - Selected Values

The selected values as shown in the table above were inputted into the derived transfer function block, with the equation derived further to a single transfer function block with calculated numerator and denominator values, as shown in the equation below. As the numerator and denominator contain the necessary coefficients, the system will be stable. See appendix 9.3 for calculations.

$$T = \frac{4s^3 + 8s^2 + 16s - 8}{65s^3 + 130s^2 + 257s + 62}$$

Equation 5 - Block Diagram Reduction - Transfer function

```
ans =

  -0.8630 + 1.6541i
  -0.8630 - 1.6541i
  -0.2740 + 0.0000i


ans =

  -0.8576 + 1.6661i
  -0.8576 - 1.6661i
  -0.2848 + 0.0000i
```

Figure 5 - - Block Diagram Reduction - Poles & Zeros

Poles and zeroes, the frequency value at which denominator and numerator respectively equal zero, can be calculated using the transfer function (Zeros, 2014). As the equations contain a cubic, there must be at least one real root (Equation, 2009). Illustrated in the image above, are the poles and zero values for the control system, with one real root and two complex for each. As shown below, the values of the poles zeros plotted on the root locus diagram confirm that the system is stable due to the poles and zeros being in the left-hand plane. The location of the poles and zeros indicate that oscillations will occur before the system settles as the poles have imaginary parts with a damping factor of less than 1 resulting in underdamping, whilst the zeros have a damping vale of 1 resulting in critical damping.

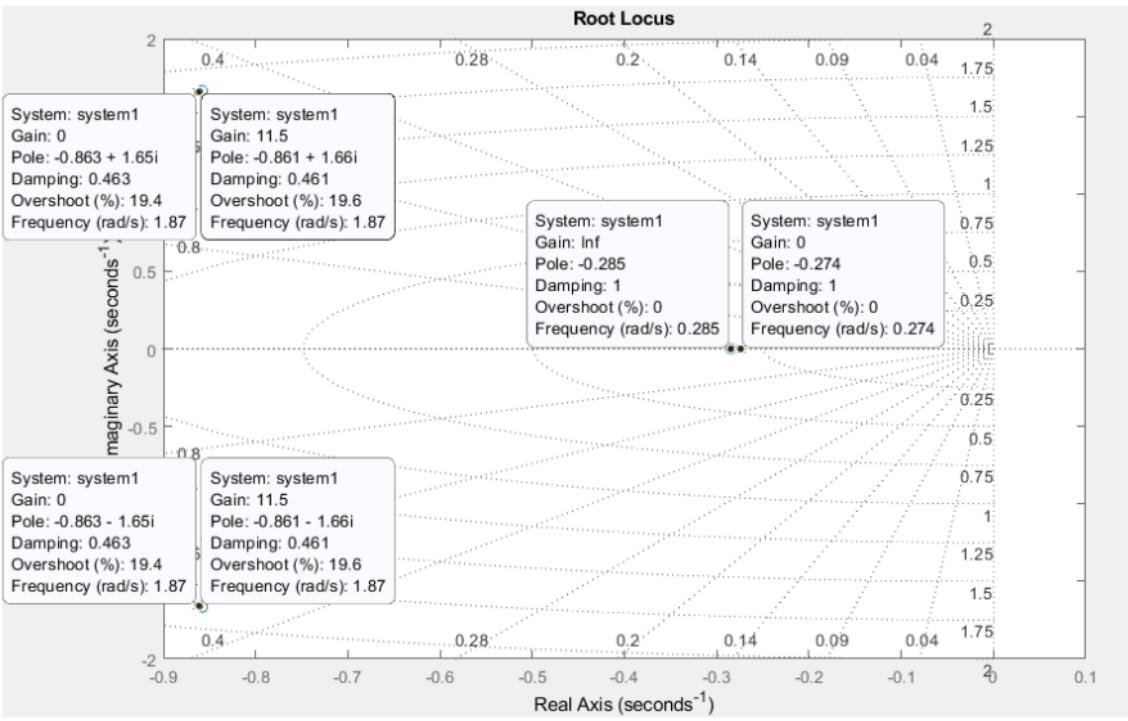

Figure 6 - Block Diagram Reduction – Root Locus Diagram

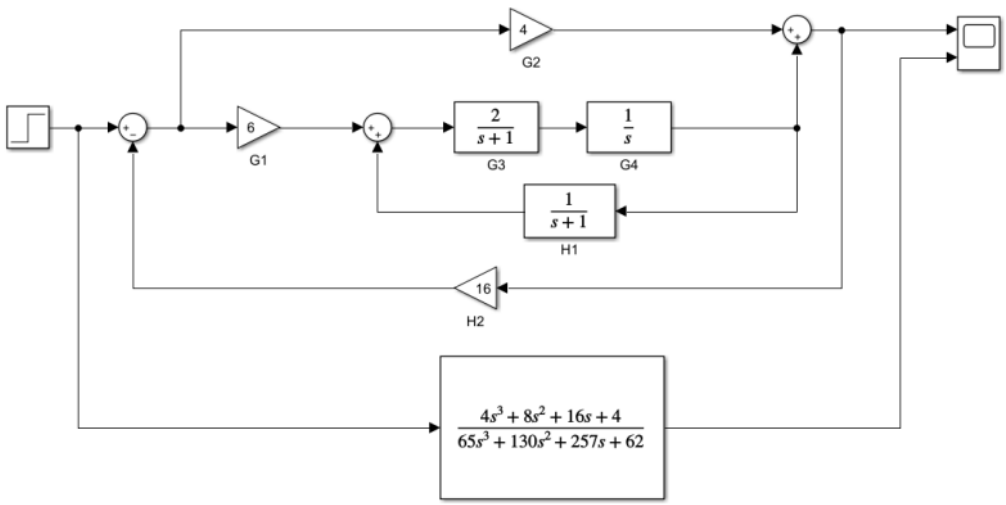

Figure 7 - Block Diagram Reduction - Simulink Model

Illustrated in the image above is the block diagram model and the derived transfer function, built using Simulink. Both circuit responses were measured on the same oscilloscope, as shown in the image below, demonstrating that the response of the derived transfer function is identical to the block diagram response and therefore proving the transfer function. See appendix 9.3 for individual circuit construction and testing responses.

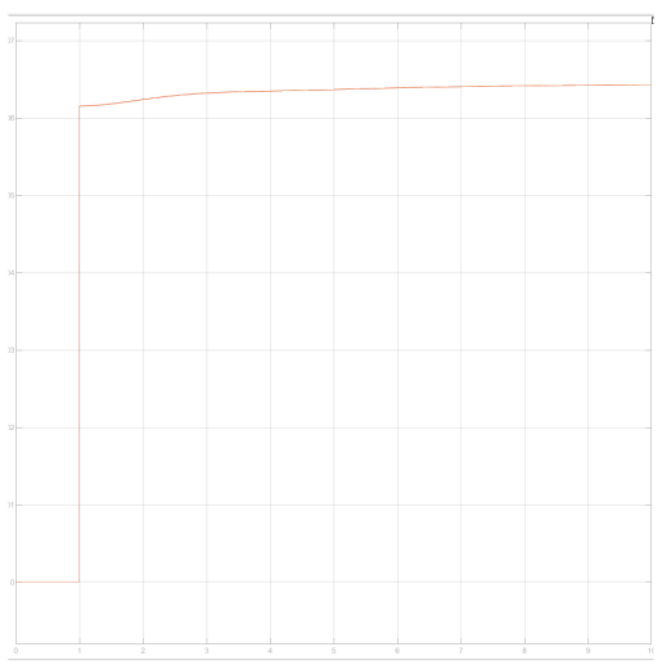

Figure 8 - Block Diagram Reduction - Simulink Model Response

5. *Frequency Response Methods*

$$G(s) = \frac{k1\,(s+p)}{(s+q)(s+r)}$$

Equation 6 - Frequency Response Method - Transfer Function

Selected Values for Frequency Response	
p Value	5
q Value	50
r Value	500
k1 Value	5000

Table 9 - Frequency Response Method - System Values

In electrical engineering and control theory, the bode plot can be used to calculate a system's frequency response i.e. characterize the system. When determining frequency response, the system's steady-state response (the point at which transient effects no longer persist) to a sinusoid input is assessed with frequency changes *(Electronics-tutorials, 2021)*. The p, q, r values, also known as ωc1, ωc2, ωc3, are the three cut off frequencies for the system. ωc1 causes the rise, whist ω2 and ωc3 are the roll down values, with the response levelling off at ωc2.

With the value of gain (K) calculated, the transfer function was able to be derived, as shown in appendix 9.4.

$$G(s) = \frac{5000s + 25000}{s^2 + 550s + 25000}$$

Equation 7 - Frequency Response Method - Transfer Function

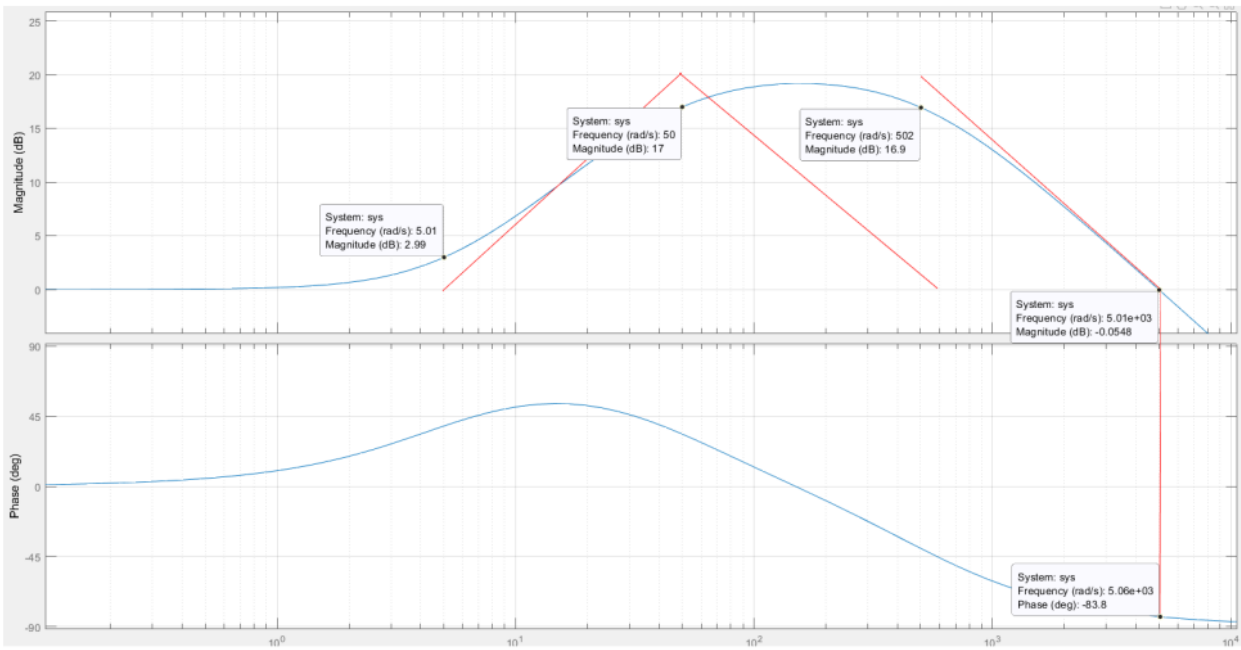

Figure 9 - Frequency Response Method - Matlab Response

Frequency Response			
Selected Frequency Values		Simulated Values	
p	5	p	5.01
q	50	q	50
r	500	r	502
k	5000	k	5010

Table 10 - Frequency Response Method - Response Comparison

As illustrated in the table above, the comparison of the selected frequency values and the simulated frequency values at the proposed dB value are either an exact confirmation of the value or with only a minor error evident. However, where there are slight errors in the values, this can be attributed to the exact positioning of the cursor within the simulation. Shown in the table below, it can be seen that at the selected frequency values, where the asymptotes are drawn, the maximum error of 3dB is seen at each of the cut off frequencies. The slight discrepancies in the magnitude values can also be attributed to the positioning of the cursor within the simulation.

Frequency Response Db Values				
	Selected Frequency Values		Asymptotes Values	
	dB	Rad/s	Db	Rad/s
ωc1	2.99dB	5	0	5
ωc2	17dB	50	20	50
ωc3	16.9dB	500	20	500

Table 11 - Frequency Response Method - Response Comparison

Demonstrated from the Matlab simulation, the system as calculated begins with the magnitude of 0dB, with the frequency value of p at 3dB. Shown in the Matlab response, the response with maximum error of 3dB at the cut-off frequencies is approximated using asymptotes. At the frequency of 5 rads/s, an asymptote is shown with a gradient of 20dB/decade, while at 50rad/s and 500 rad/s asymptotes are shown with -20dB/decade. With the phase angle shown as -83.8°, the system response is stable. The stability of the system cannot be determined using the gain margin method as the phase angle does not reach -180°. As a result, the phase margin method is used, where the system becomes unstable beyond -90°.

You have not calculated the phase margin, it should be 180 - 83.8

6. *Digital Control Systems*

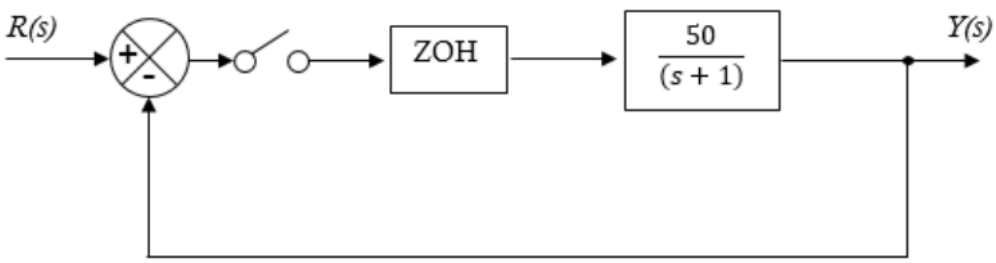

Figure 10 - Digital Control System - Block Diagram

For the digital control system shown above, the closed-loop transfer function was calculated, as shown below. From the calculated closed-loop transfer function, the maximum sampling period and the minimum sampling period were calculated, see appendix 9.5 for calculations.

$$T(z) = \frac{50(1-e^{-t})}{(z-e^{-t}) + 50(1-e^{-t})} = \frac{50(1-e^{-t})}{z + 50 - 51e^{-t}}$$

Equation 8 - Digital Control System - Closed Loop Transfer Function

Digital Control System Values	
Maximum Sampling Period	40mS
Minimum Sampling Frequency	25Hz

Table 12 - Digital Control System - System Calculated Values

From the calculated sampling period, a digital control system Simulink model was constructed, see appendix 9.5. The system was constructed with a step input and a zero-order hold, ZOH, for which the sampling period calculated value of 40mS was inputted. Demonstrated from the Matlab simulation, as shown below, the response of the simulated system confirms that the calculated values of the digital control system are correct as the simulated minimum sampling frequency is 25Hz at the sampling period of 40mS. The response of the system demonstrates critical stability, although oscillations initially occur, the system does settle to for stability. To confirm the maximum sampling frequency for a stable response, a sampling frequency of 0.41mS was inputted to Matlab, see appendix 9.5. As demonstrated from the system response, the system is now unstable, proving that the maximum sampling period for a stable response is 40mS.

What ca you say about the argand diagram in the z plane?

This is stable

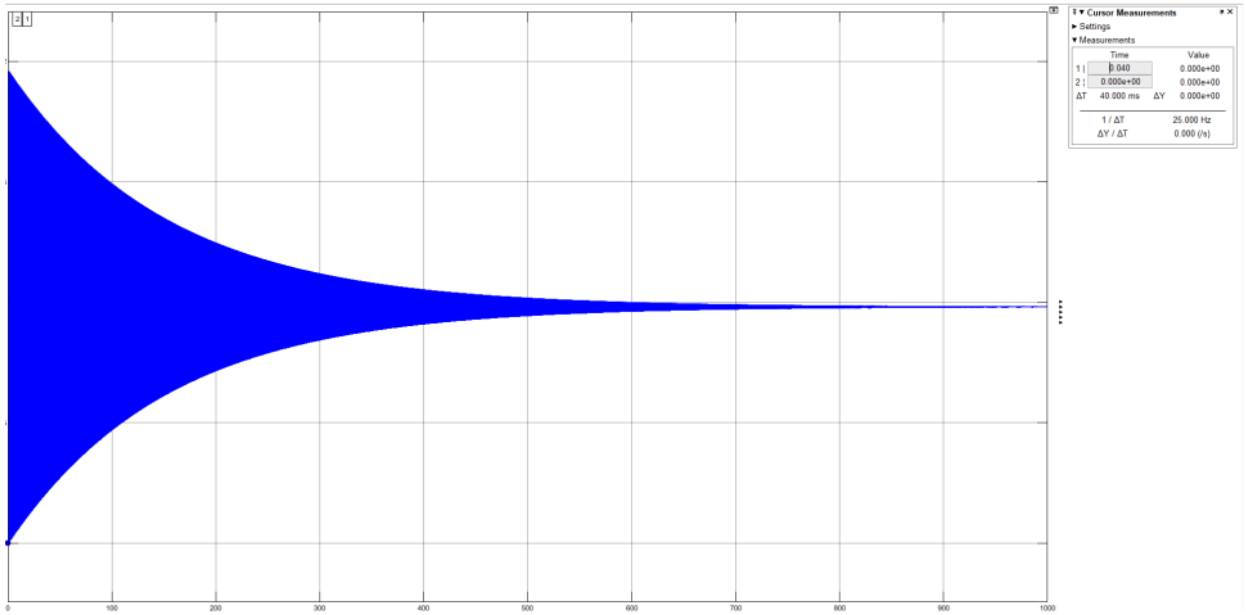

Figure 11 - Digital Control System - System Response

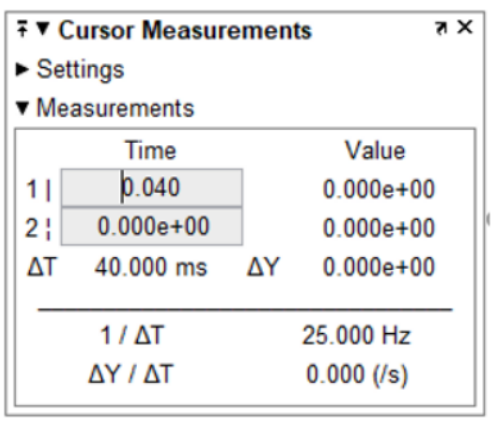

Figure 12 - Digital Control System - Response Values

7. Conclusions & Recommendations

The role of modelling has long been established in Control Engineering, both for system design and as a measure of feasibility and robustness. Mathematical modelling has been the foundation of traditional systems, enabling a simple representation of system behaviour and allowing for system analysis (Systems, 2019). Such approaches include the use of block diagrams as a pictorial representation of component functions, performance and determination of transfer functions which themselves can be used to illustrate system/component input/output relationships and analysis of the behaviour (for linear, time-invariant differential equations (Systems, 2009).

However, in order to provide proof of mathematical concepts, simulation or modelling using dedicated computer software can be used. It also allows engineers or system designers to confirm system operation before making changes to or designing the real system (Simulation, 2008), mimicking and visually illustrating the process, In the case of control systems for example allowing a review of behaviour in response to a number of inputs (Control_Systems, 2004).

assignment

During the project a number of different mathematical modelling techniques including block reduction diagrams and transfer functions, were used to design and assess system theoretical performance. Once calculated, the designated modelling and simulation software such as MATLAB and Simulink were used to prove the theory. In each of the tasks undertaken, the similarity between calculated and simulated results verified the theory, demonstrating that mathematical modelling and simulation techniques can be used to design and test control theory, and determine suitability of design and performance. As with the case with any project involving computer modelling or simulation software, success depends heavily on frequency of use and familiarity of equipment used to run the software, and as such where small discrepancies in results were seen this was likely attributable to user operation e.g. fine/exact positioning of the curser.

To further build on the success of this project it would be of benefit to complete the process by undertaking practical experiments, connecting to physical systems to test the real-world operation of the theory.

Although there are no marks available for research, it is good to see you reading around the subject in order to compare with established views

8. References

Control_Systems, 2004. *www3.nd.edu*. [Online]
Available at: https://www3.nd.edu/~pantsakl/Publications/348A-EEHandbook05.pdf
[Accessed 22 04 2021].

Electronics-tutorials, 2021. *www.electronics-tutorials.ws.* [Online]
Available at: https://www.electronics-tutorials.ws/amplifier/frequency-response.html
[Accessed 30 03 2021].

Equation, C., 2009. *https://www.mathcentre.ac.uk/resources/uploaded/mc-ty-cubicequations-2009-1.pdf.* [Online]
Available at: https://www.mathcentre.ac.uk/resources/uploaded/mc-ty-cubicequations-2009-1.pdf
[Accessed 16 04 2021].

Simulation, C. S. P. S. A. F. F. I. T. L., 2008. *www.core.ac.uk.* [Online]
Available at: https://core.ac.uk/reader/232143510
[Accessed 22 04 2021].

Systems, M. M. A. t. t. D. a. A. o. M. a. C., 2019. *www.thinkmind.org.* [Online]
Available at: https://www.thinkmind.org/articles/accse_2019_1_40_90034.pdf
[Accessed 21 04 2021].

Systems, M. M. o. C., 2009. *www.pearsonhighered.com.* [Online]
Available at: https://www.pearsonhighered.com/assets/samplechapter/0/1/3/6/0136156738.pdf
[Accessed 21 04 2021].

Zeros, U. P. &., 2014. *www.web.mit.edu.* [Online]
Available at: https://web.mit.edu/2.14/www/Handouts/PoleZero.pdf
[Accessed 15 04 2021].

9. Appendix

9.1. Transient Response of a Second Order System

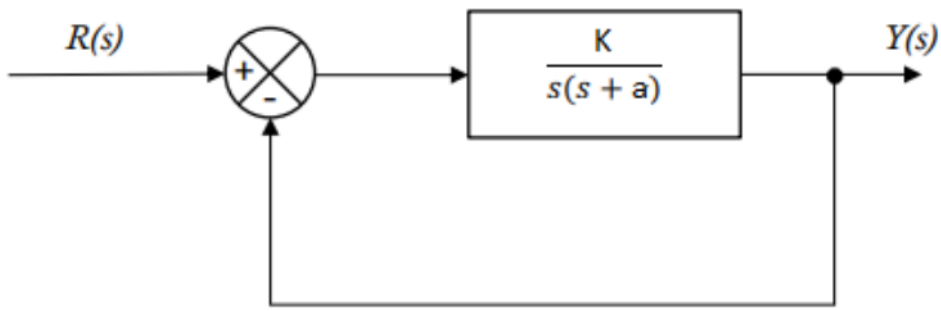

Figure 13 - Second Order System

Damping Factor

$$2\zeta\omega n = 5. \quad \zeta = \frac{5}{2\omega n} = \frac{5}{2\ x\ 5} = \frac{5}{10} = 0.5$$

Equation 9 - Second Order System - Damping Factor

Damped frequency

$$\omega = \omega n\sqrt{1-\zeta^2} = 5\sqrt{1-0.5^2} = 4.33\ rad/s$$

Equation 10 - Second Order System - Damped Frequency

Rise time from 0 to 100% of final value

$$tR = \frac{\pi}{2\omega n\sqrt{1-\zeta^2}} = \frac{\pi}{(2x5)\sqrt{1-0.5^2}} = 0.181\ seconds$$

$$\frac{\pi - \tan^{-1}(\frac{\sqrt{1-\zeta^2}}{\zeta})}{\omega} = \frac{\pi - \tan^{-1}(\frac{\sqrt{1-0.5^2}}{0.5})}{4.33} = 0.484\ seconds$$

Equation 11 - Second Order System - Rise Time

Peak time

$$tp = \frac{\pi}{\omega n\sqrt{1-\zeta^2}} = \frac{\pi}{5\sqrt{1-0.5^2}} = 0.726\ seconds$$

Equation 12 - Second Order System - Peak Time

Overshoot

$$100e - \left(\frac{\zeta\pi}{\sqrt{1-\zeta^2}}\right) = 100e - \left(\frac{0.5\ x\ \pi}{\sqrt{1-0.5^2}}\right) = 16.303\%$$

Equation 13 - Second Order System - Overshoot Percentage

Settling time, within +2%

$$ts = 2\% = \frac{4}{\zeta\omega n} = \frac{4}{0.5\ x\ 5} = 1.6\ Seconds$$

Equation 14 - Second Order System - Settling Time, within +2%

Number of oscillations during settling time

$$\pm 2\% = n = \frac{2}{\pi}\sqrt{\frac{1}{\zeta^2} - 1} = \frac{2}{\pi}\sqrt{\frac{1}{0.5^2} - 1} = 1.103$$

Equation 15 - Second Order System - Oscillations During Settling

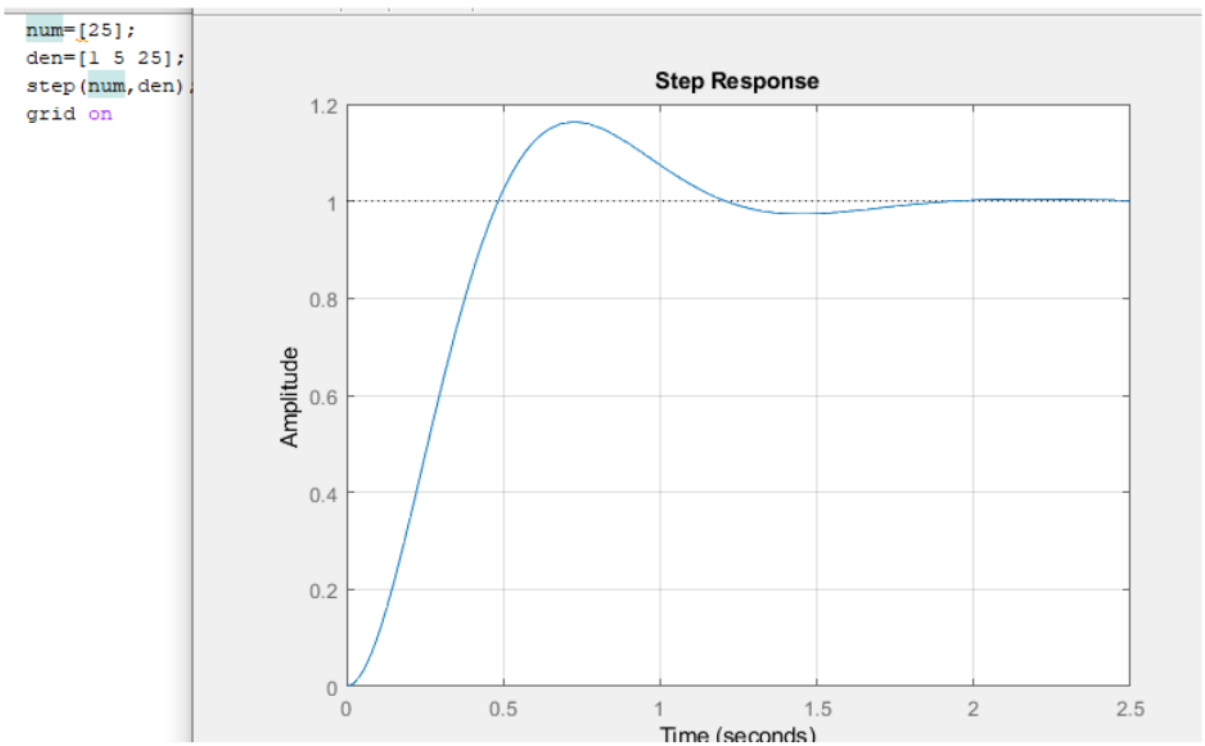

Figure 14 - Second Order System - Matlab Simulation with Matlab Code

9.2. Control System Modelling

Laplace Transform:

$$\mathcal{L}\left\{\frac{d^2y}{dt^2} + a\frac{dy}{dt} + by\right\} = s^2\,Y(s) + as\,Y(s) + bY(s)$$

Equation 16 - Control System Modelling - dy Laplace Transform

$$\mathcal{L}\left\{\frac{d^2x}{dt^2} - p\frac{dx}{dt} + qx\right\} = s^2\,X(s) - ps\,X(s) + qX(s)$$

Equation 17 - Control System Modelling - dx Laplace Transform

$$\frac{Y(s)}{X(s)} = \frac{s^2 - ps + q}{s^2 + as + b} = G(s) = \frac{s^2 - ps + q}{s^2 + as + b}$$

Equation 18 - Control System Modelling - Open Loop Transfer Function

Poles:

$$s = \frac{-b \pm \sqrt{(b)^2 - 4(ac)}}{2(a)} = \frac{-4 \pm \sqrt{(4)^2 - 4(1x2)}}{2(1)} = \frac{-4 \pm \sqrt{16 - 8}}{2} =$$

$$\frac{-4 \pm \sqrt{8}}{2} = -3.4142\,, -0.5858$$

Equation 19 - Control System Modelling - Poles Calculation

Zeros:

$$s = \frac{-b \pm \sqrt{(b)^2 - 4(ac)}}{2(a)} = \frac{--3 \pm \sqrt{(-3)^2 - 4(1x5)}}{2(1)} = \frac{3 \pm \sqrt{-9 - 20)}}{2} =$$

$$\frac{3 \pm j\sqrt{11}}{2} = 1.5 \pm j\,1.6583$$

Equation 20 - Control System Modelling - Zeros Calculation

```
clc;
hold off

s = tf('s');
system1 = (s^2 - 3*s + 5)/(s^2 + 4*s + 2)
pole(system1)
zero(system1)

step(system1);
%rlocus(system1);
grid on
```

Figure 15 - Control System Modelling - Matlab Code for Poles & Zeros

```
ans =

   -3.4142
   -0.5858


ans =

   1.5000 + 1.6583i
   1.5000 - 1.6583i
```

Figure 16 - Control system Modelling - Matlab Poles & Zeros Values

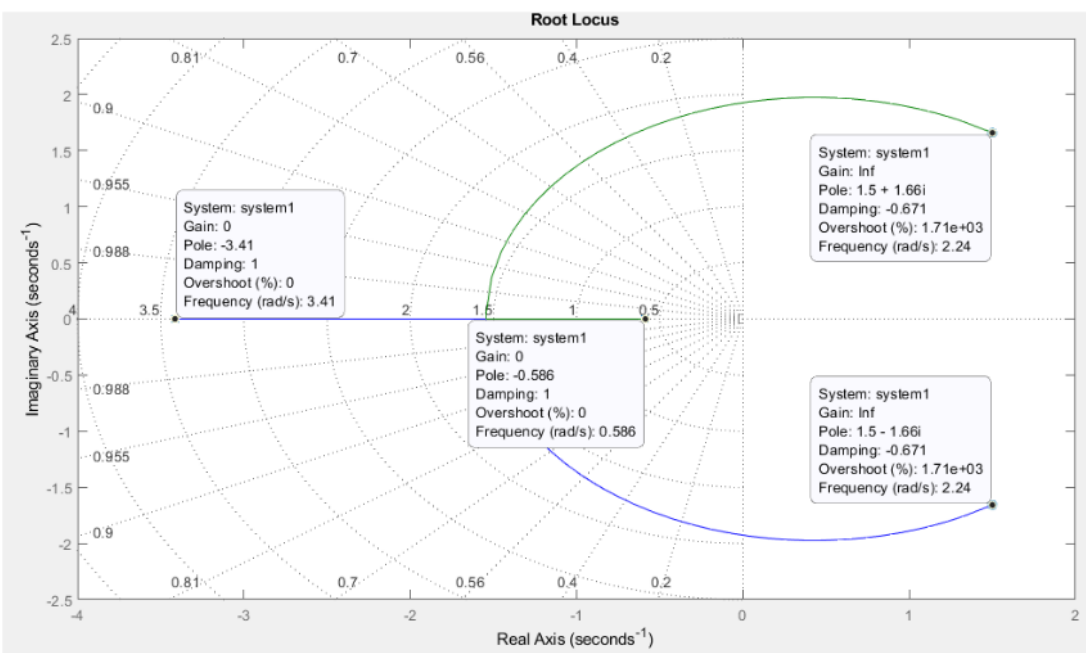

Figure 17 - Control System Modelling - Poles & Zeros Root Locus

Negative Feedback

$$T(s) = \frac{G(s)}{1 + H(s)x\,G(s)} = = \frac{\frac{s^2 - 3s + 5}{s^2 + 4s + 2}}{1 + k\left(\frac{s^2 - 3s + 5}{s^2 + 4s + 2}\right)} = \frac{s^2 - 3s + 5}{s^2 + 4s + 2 + ks^2 - 3ks + 5}$$

$$= \frac{s^2 - 3s + 5}{(1 + k)s^2 + (4 - 3k)s + (2 + 5k)} = \left(\frac{1}{1 + k}\right)\frac{s^2 - 3s + 5}{s^2 + \left(\frac{4 - 3k}{1 + k}\right) + \left(\frac{2 + 5k}{1 + k}\right)}$$

Equation 21 - Control System Modelling - Closed Loop Transfer Function

Poles

$$s^2 + \left(\frac{4 - 3k}{1 + k}\right) + \left(\frac{2 + 5k}{1 + k}\right) = 0$$

For critical damping

$$\frac{-\left(\frac{4 - 3k}{1 + k}\right)}{2x1} = 0 = \frac{-4 + 3k}{1 + k} = 0 = -4 + 3k = 0, \qquad 3k = 4, k = 1.333$$

Equation 22 - Control System modelling - K Value for Critical Damping *this is critical stability*

```
clc;
hold off

s = tf('s');
system1 = (s^2 - 3*s + 5)/(s^2 + 4*s + 2)
pole(system1)
zero(system1)

%step(system1);
rlocus(system1);
grid on
```

Figure 18 - Control System Modelling - Matlab Code for Root Locus

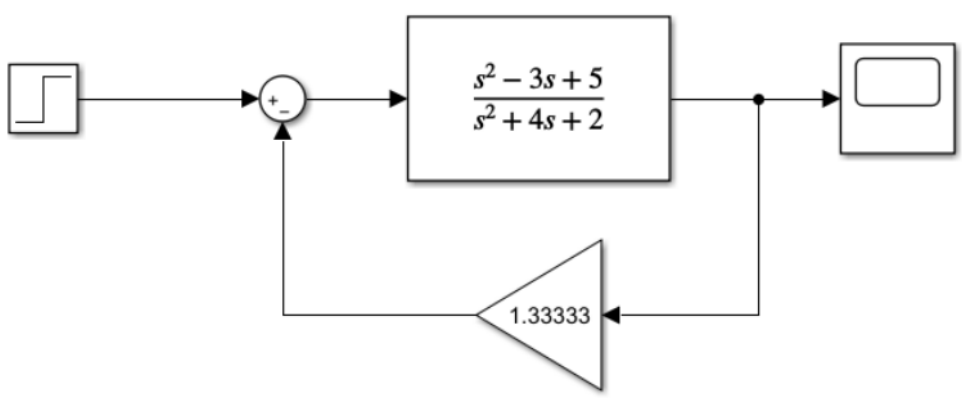

Figure 19 - Control System Modelling - Simulink Model

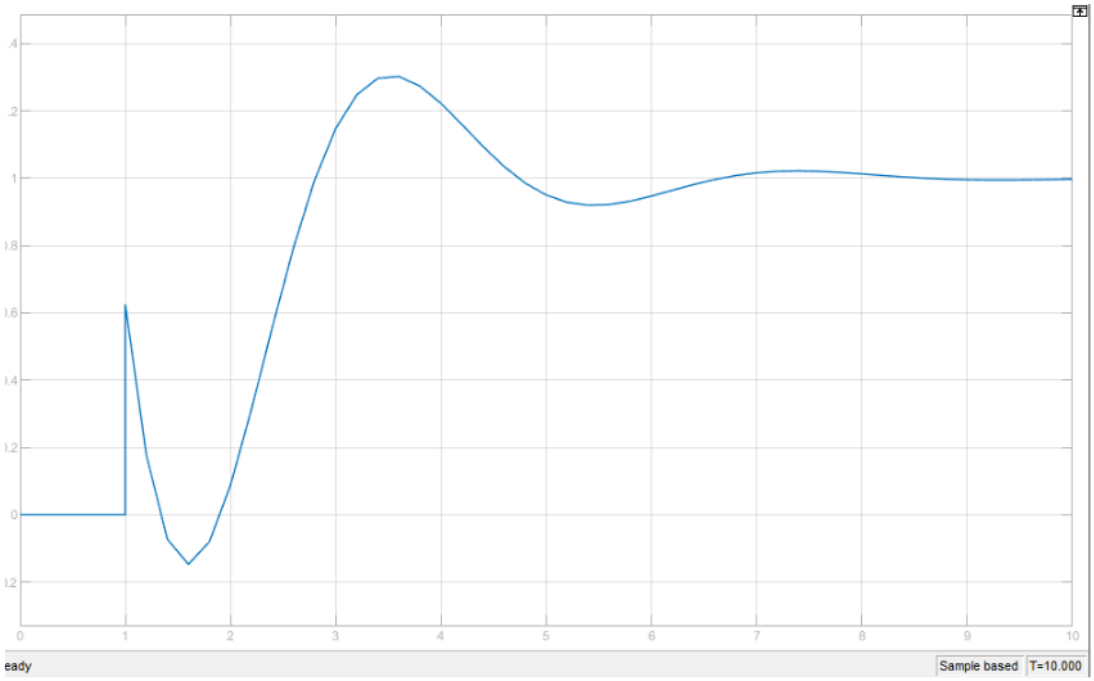

Figure 20 - Control System Modelling - Stable Response

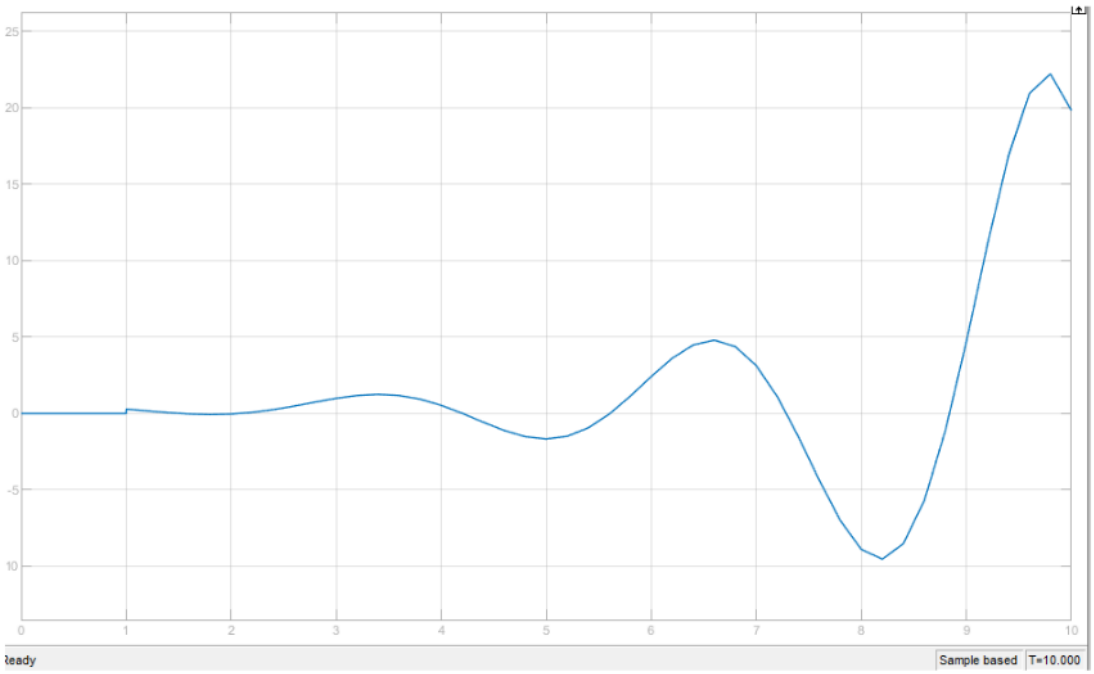

Figure 21 - Control System Modelling - Unstable Response

9.3. Block Diagram Reduction Method

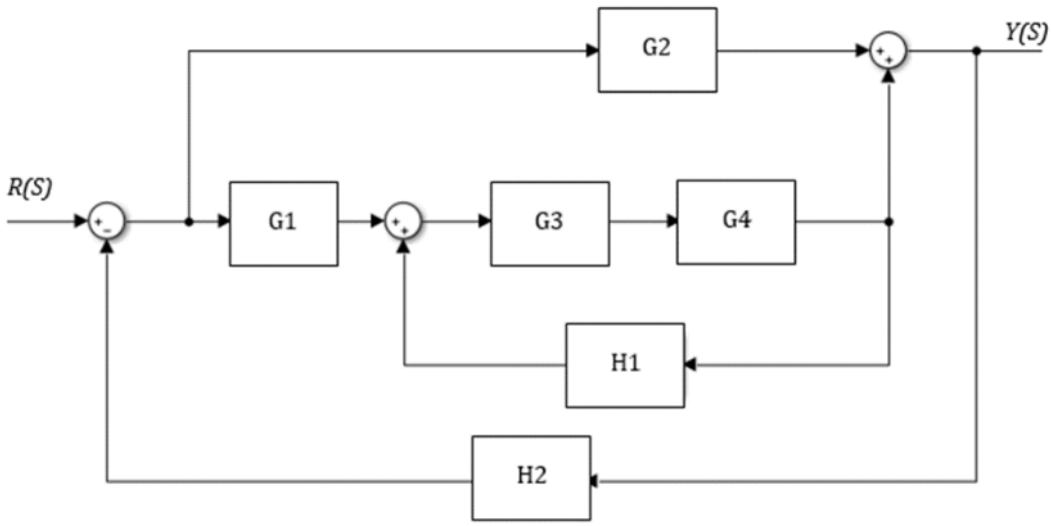

Figure 22 - Block Diagram Reduction Method - Block Diagram

Step 1. Combine G3 with G4 to create G5.

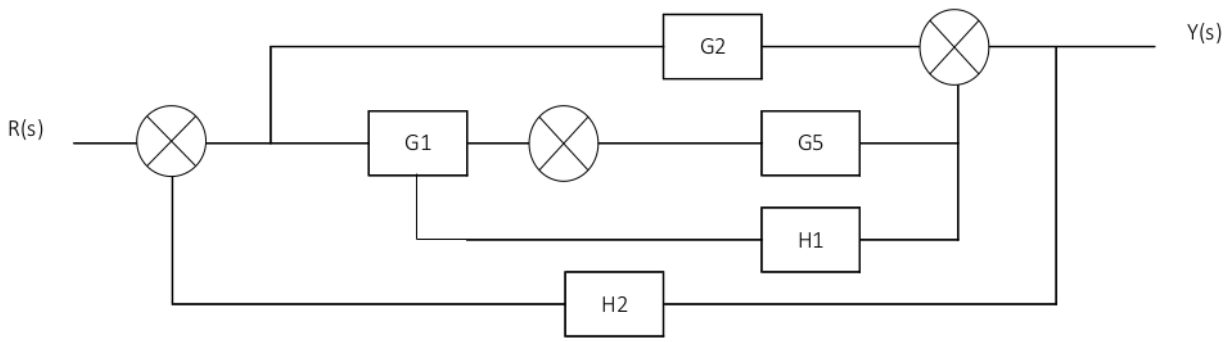

Combine G3 with G4 to create G5

G5	=	G3 x G4

Figure 23 - Block Diagram Reduction Method - Step 1

Step 2. Combine G5 with H1, to create G6.

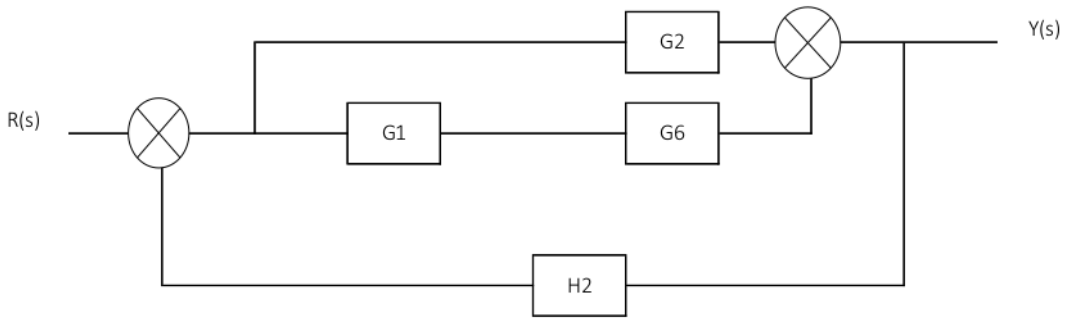

Combine G5 with H1 to create G6

$$G6 = \frac{G5}{1-G5H1}$$

Figure 24 - Block Diagram Reduction Method - Step 2

Step 3. Move G2 forward of G1

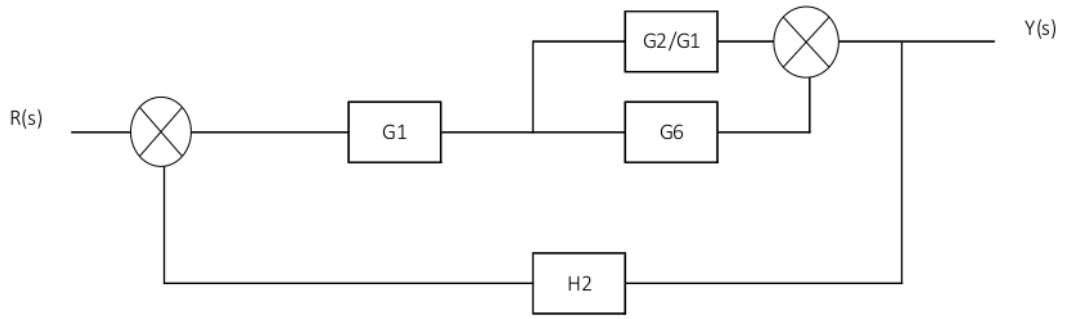

Move G2 to other side of G1

$$G2 = \frac{G2}{G1}$$

Figure 25 - Block Diagram Reduction Method - Step 3

Step 4. Combine G6 with G2/G1, to create G7.

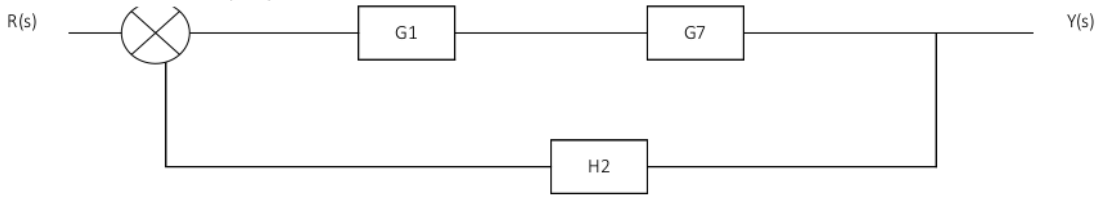

Combine G2/G1 with G6 to create G7

Figure 26 - Block Diagram Reduction Method - Step 4

Step 5. Combine G1 with G7, to create G8

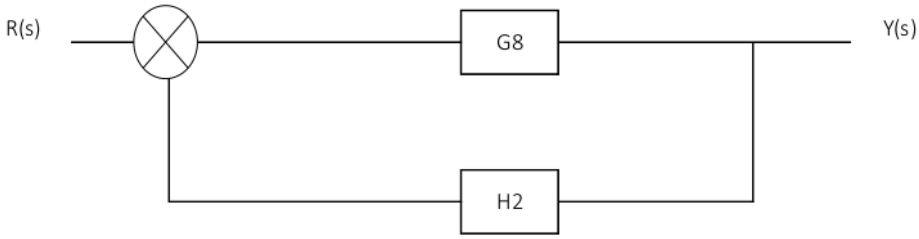

Combine G1 with G7 to create G8

Figure 27 - Block Diagram Reduction Method - Step 5

Step 6. Combine G8 with H2 to create T

Combine G8 with H2 to create T

Figure 28 - Block Diagram Reduction Method - Step 6

Substitute for G8

$$T = \frac{G8}{1 + H2\ x\ G8}$$

Equation 23 - Block Diagram Reduction Method - Substitute for G8

Substitute for G7

$$T = \frac{G1\ x\ G7}{1 + H2(G1\ x\ G7)}$$

Equation 24 - Block Diagram Reduction Method - Substitute for G7

Substitute for G6

$$T = \frac{G1\left(G6 + \frac{G2}{G1}\right)}{1 + H2\ G1\left(G6 + \frac{G2}{G1}\right)} = \frac{G1\ G6 + G2}{1 + H2(G1\ G6 + G2)}\ \frac{G1\ G6 + G2}{1 + H2\ G1\ G6 + H2\ G2}$$

Equation 25 - Block Diagram Reduction Method - Substitute for G6

Substitute for G5

$$T = \frac{G1\left(\left(\frac{G5}{1 - H1\ x\ G5}\right) + G2\right)}{1 + H2\ G1\left(\left(\frac{G5}{1 - H1\ x\ G5}\right) + H2\ G2\right)} = \frac{G1\ G5 + G2\ (1 - G3\ G4\ H1)}{1 - G3\ G4\ H1 + H2\ G1\ G3\ G4 + H2\ G2\ (1 - G3\ G4\ H1)}$$

$$= \frac{G1\ G3\ G4 + G2 - G2\ G3\ G4\ H1}{1 - G3\ G4\ H1 + H2\ G1\ G3\ G4 + H2\ G2 - H2\ G2\ G3\ G4\ H1}$$

Equation 26 - Block Diagram Reduction Method - Substitute for G5

Transfer Function in form of G

$$T = \frac{G1xG3xG4 + G2 - G2xG3xG4xH1}{1 - G3xG4xH1 + H2xG1xG3xG4 + H2xG2 - H2xG2xG3xG4xH1}$$

Equation 27 - Block Diagram Reduction Method - Transfer Function in G

Substitute values in

$$T = \frac{6x\frac{2}{s+1}\ x\ \frac{1}{s} + 4 - 4\ x\ \frac{2}{s+1}\ x\ \frac{1}{s}\ x\ \frac{1}{s+1}}{1 - \frac{1}{s+1}\ x\ \frac{1}{s}\ x\ \frac{1}{s+1} + 16\ x\ 6\ x\ \frac{2}{s+1}\ x\ \frac{1}{s} + 16\ x\ 4 - 16\ x\ 4\ x\ \frac{2}{s+1}\ x\ \frac{1}{s}\ x\ \frac{1}{s+1}}$$

$$= \frac{\frac{12}{s+1} + 4 - \frac{8}{s(s+1)^2}}{1 - \frac{2}{s(s+1)^2} + \frac{192}{s(s+1)} + 64 - \frac{128}{s(s+1)^2}}$$

Equation 28 - Block Diagram Reduction - Transfer Function with Selected Values

Multiply Top and bottom by $s(s+1)^2$

$$T = \frac{12s(s+1) + 4(s+1)^2 - 8}{(s+1)^2 - 2 + 192(s+1) + 64(s+1)^2 - 128}$$

$$= \frac{12s + 12 + 4s^3 + 4s^2 + 4s^2 + 4s - 8}{s^3 + s^2 + s^2 + s - 2 + 192s + 192 + 64s^3 + 64s^2 + 64s^2 - 128}$$

Equation 29 - Block Diagram Reduction - Transfer Function

Transfer Function

$$T = \frac{4s^3 + 8s^2 + 16s - 8}{65s^3 + 130s^2 + 257s + 62}$$

Equation 30 - Block Diagram Reduction - Derived Transfer Function

Simulink Block Diagram Simulation

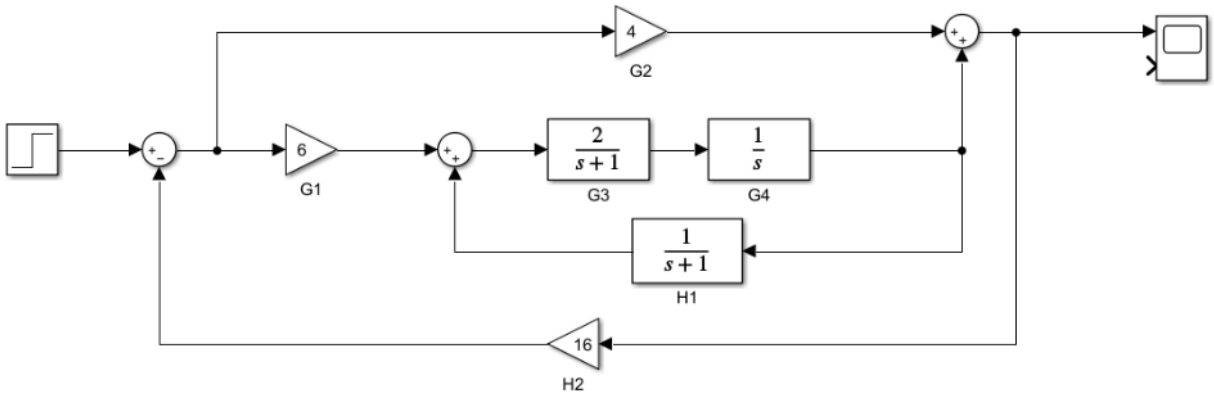

Figure 29 - Block Diagram Reduction - Block Diagram Simulink Model

Block Diagram Reduction - Simulink Block Diagram Model Response

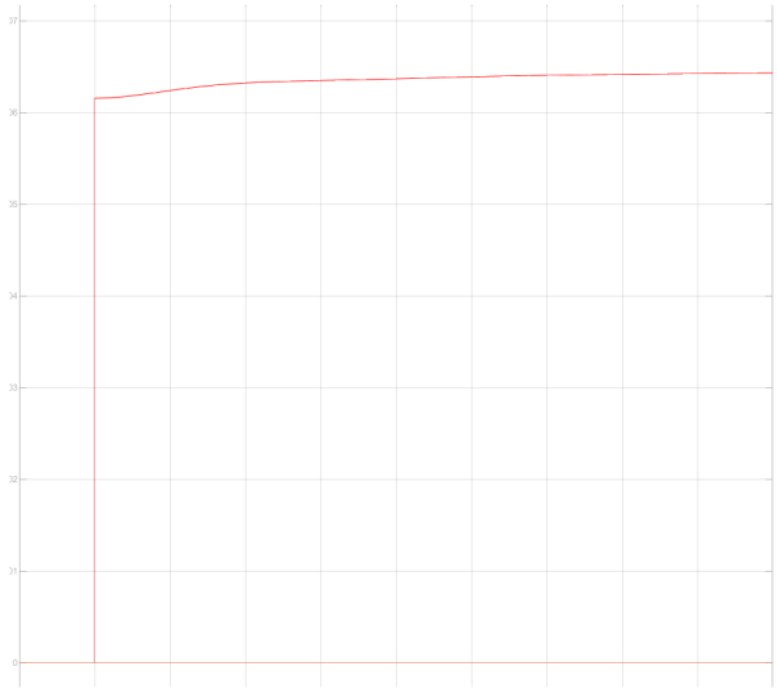

Figure 30 - Block Diagram Reduction - Simulink Block Diagram Model Response

Simulink Transfer Function Simulation

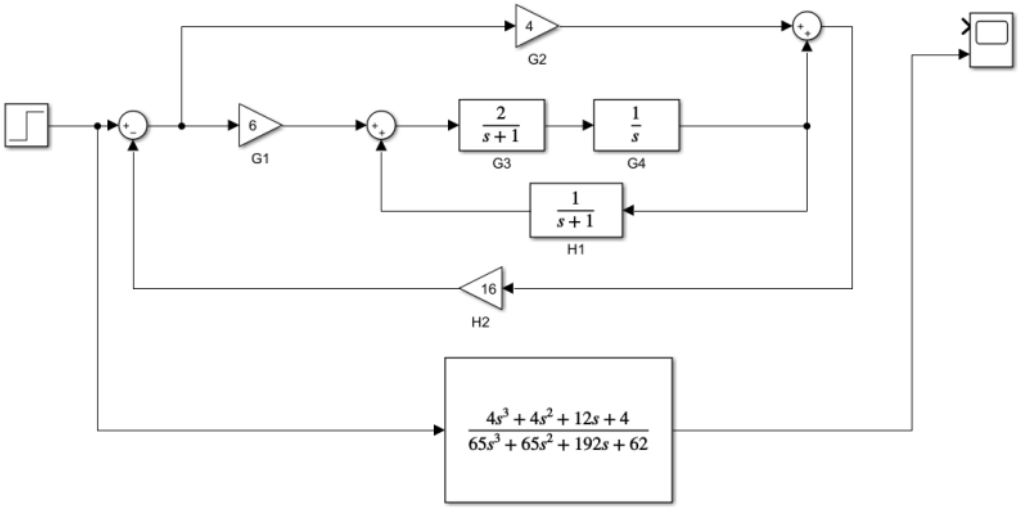

Figure 31 - Block Diagram Reduction - Transfer Function Simulink Model

Block Diagram Reduction - Simulink Transfer Function Response

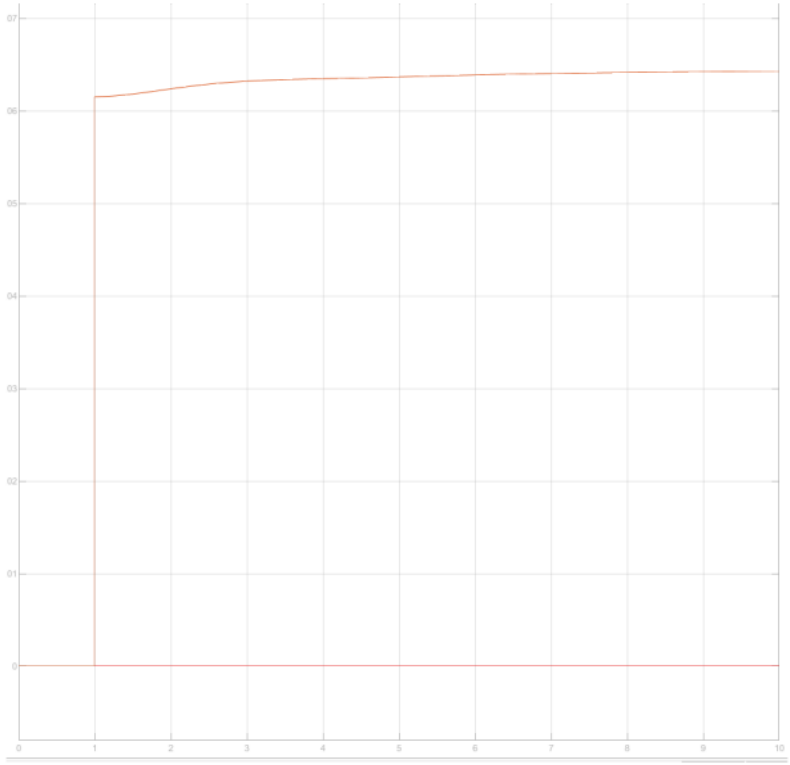

Figure 32 - Block Diagram Reduction - Simulink Transfer Function Model Response

9.4. Frequency response Method

Value for K

$$K = \frac{k\ x\ p}{q\ x\ r} = \frac{5000\ x\ 5}{50\ x\ 500} = \frac{25000}{25000} = 1$$

Equation 31 - Frequency Response Method - Gain Calculation

dB Value for Bode plot

$$20\log_{10}(1) = 0dB$$

Equation 32 - Frequency Response Method - dB Value

Transfer function

$$G(s) = \frac{k1\ (s+p)}{(s+q)(s+r)} = \frac{5000\ (s+5)}{(s+50)(s+500)} = \frac{5000s\ 25000}{s^2 + 550s + 25000}$$

Equation 33 - Frequency Response Method - Transfer Function

9.5. Digital Control Systems

$$\frac{50}{(s+1)}$$

Laplace Transform of ZOH

$$\frac{1-e^{-st}}{s}$$

Equation 34 - Digital Control System - Laplace Transform of ZOH

Open loop transfer function

$$G(s) = \frac{1-e^{-st}}{s}\ x\ \frac{50}{(s+1)}$$

Equation 35 - Digital Control System - Open Transfer Function

Taking z transforms

$$G(z) = Z\{G(s)\} = (1-\ z^{-1})\ 50z\ \{\frac{1}{s(s+1)}\}$$

Equation 36 - Digital Control System - z Transforms

Partial fractions

$$\frac{1}{s(s+1)} = \frac{A}{s} = \frac{B}{s+1}$$

$$\frac{1}{s(s+1)} = \frac{A(s+1)+B(s)}{s(s+1)}$$

$$A(s+1)+B(s) = 1$$

$$s = 0;\ A(0+1)+B(0) = 1\ =\ A = 1$$
$$s = -1;\ A(-1+1)+B(-1) = 1\ =\ B = -1$$

$$\frac{1}{s(s+1)} = \frac{1}{s} - \frac{1}{(s+1)} = Z\left\{\frac{1}{s(s+1)}\right\} = Z\ \left\{\frac{1}{s} - \frac{1}{(s+1)}\right\}$$
$$= 1\ \left\{\frac{z}{z-1} - \frac{z}{z-e^{-1t}}\right\}$$

Equation 37 - Digital Control System - Partial fractions

Closed loop transfer Function

$$G(Z) = (1-z^{-1})\ x\ 50\ x\ 1z\ \left[\frac{z-e^{-1t}-z+1}{(z-1)(z-e^{-1t})}\right] = \frac{50\ (1-e^{-1t})}{z-e^{-t}}$$

$$T(z) = \frac{G(z)}{1+G(z)} = \frac{\frac{50(1-e^{-t})}{(z-e^{-t})}}{\frac{1+50(1-e^{-t})}{z-e^{-t}}}$$

$$T(z) = \frac{50(1-e^{-t})}{(z-e^{-t})+\ 50(1-e^{-t})} = \frac{50(1-e^{-t})}{z+\ 50-51e^{-t}}$$

Equation 38 - Digital Control System - Closed Loop Transfer Function

Poles are found when

$$Z + 50 - 51e^{-t} = 0$$

For stability,

$$-1 < Z < +1$$

For Z +1

$$51e^{-t} - 50 = 1$$
$$e^{-t} = \frac{51}{51} = 1$$

Taking log base of e;

$$-T = \ln(1)\ , -T = 0\ , T = 0$$

For z=-1

$$51e^{-t} - 50 = -1$$

Equation 39 - Digital Control System - System Stability

$$e^{-t} = \frac{50 - 1}{51} = 0.96078$$
$$\ln(0.96078) = -0.04$$
$$T = 40ms$$

Equation 40 - Digital Control System - Maximum Sampling Period

Minimum sampling frequency

$$= \frac{1}{0.04} = 25Hz$$

Equation 41 - Digital Control System - Minimum Sampling Frequency

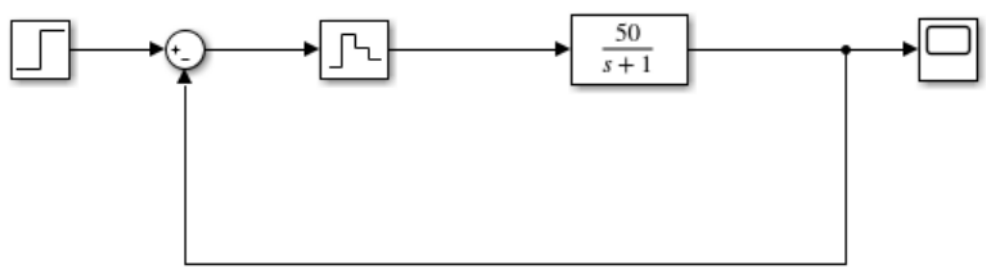

Figure 33 - Digital Control System - Simulink Model

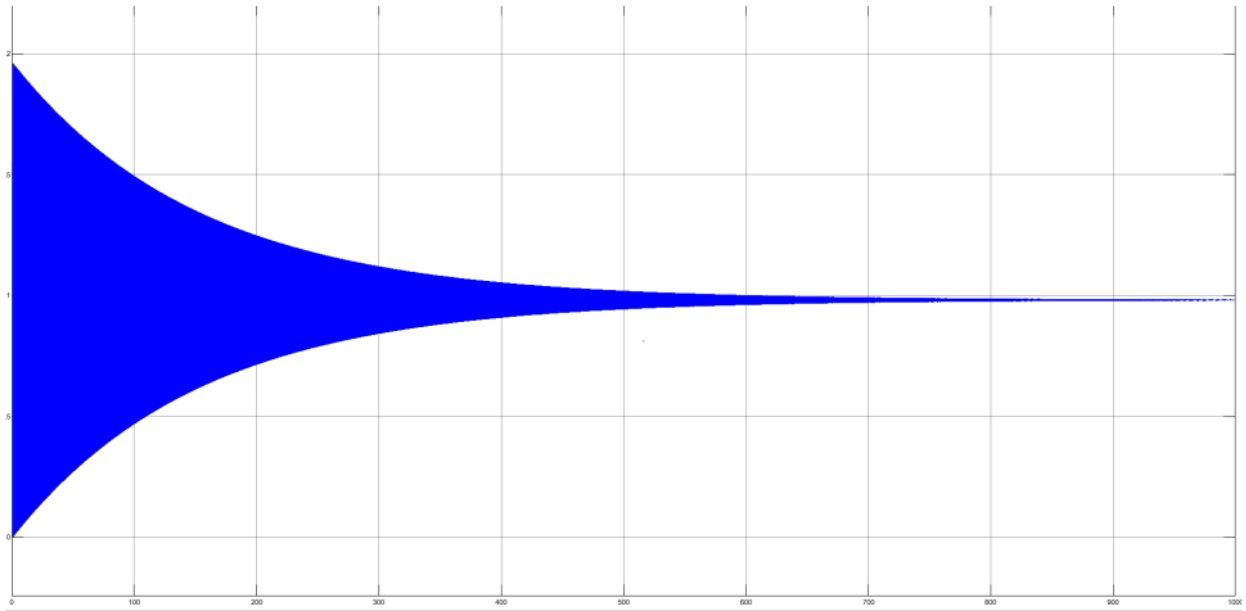

Figure 34 - Digital Control System - Stable System Response

Figure 35 - Digital Control System - Unstable System Response

1809810

GRADEMARK REPORT

FINAL GRADE

75/100

GENERAL COMMENTS

Instructor

PAGE 1

PAGE 2

PAGE 3

PAGE 4

PAGE 5

PAGE 6

Text Comment. This is an assignment not a project

Text Comment. calculated esults

Text Comment. The order doesn't match the brief

Text Comment. assignment

PAGE 7

Text Comment. plus signs are missing

PAGE 8

PAGE 9

Text Comment. These are not the poles and zero but they do produce them

Text Comment. p = 3 not -3

PAGE 10

Text Comment. What value of K would have produced critical damping?

PAGE 11

PAGE 12

Text Comment. the x's are cluttering up the equation and are not needed, use subscripts for the numbers in future

PAGE 13

PAGE 14

PAGE 15

PAGE 16

PAGE 17

Text Comment. You have not calculated the phase margin, it should be 180 - 83.8

PAGE 18

Text Comment. What ca you say about the argand diagram in the z plane?

PAGE 19

Text Comment. This is stable

PAGE 20

Text Comment. assignment

PAGE 21

Text Comment. Although there are no marks available for research, it is good to see you reading around the subject in order to compare with established views

PAGE 22

PAGE 23

PAGE 24

PAGE 25

PAGE 26

Text Comment. this is critical stability

PAGE 27

PAGE 28

PAGE 29

PAGE 30

PAGE 31

PAGE 32

PAGE 33

PAGE 34

PAGE 35

PAGE 36

PAGE 37

GRADING FORM: NEW CSG-RUBRIC

DAVID THOMAS	75

1. ENGAGEMENT WITH LITERATURE

N/A

2. KNOWLEDGE AND UNDERSTANDING

Excellent, detailed knowledge and highly critical understanding of the well-established concepts and principles of the subject and the main methods of enquiry. (15/20)

15

3. COGNITIVE AND INTELLECTUAL

Excellent critical evaluation and analysis of concepts and principles leading to logical, evidence-based, reasoned arguments and judgements. Explicit recognition of other stances and a strong awareness of the limits of their knowledge. A capacity for independent thought and ability to 'see beyond the question', suggesting some grasp of the broader field and wider concepts. (14/20)

21

4. PRACTICAL APPLICATION

An advanced application of a range of established methods, materials, tools and/or techniques. The context of the application is well considered, and insightful. Consistent, accurate and logical application of theory to practice, making well-developed links between the two. Can identify problems and propose excellent, creative solutions outside the context in which they were first studied. (15/20)

23

5. TRANSFERABLE SKILLS

Can communicate professionally confidently and consistently in a suitable medium for the audience.

16

Work is coherent, very fluent and is presented proficiently. Can work autonomously with initiative. Where relevant can work professionally within a team, showing leadership skills as appropriate, and meeting obligations. Demonstrates excellent skills for employment requiring the exercise of personal responsibility and decision-making and an appetite for further development. (16/20)