Prifysgol Cymru
Y Drindod Dewi Sant
University of Wales
Trinity Saint David

**APPENDIX GA36a**

# LEVEL 4 ASSESSMENT SPECIFICATION

| | | | |
|---|---|---|---|
| **Student name:** | | **Student ID number:** | |
| **Programme:** | **BA/MDes Product Design \| BSc/MDes Product Design & Technology** | | |
| **Module:** | **3D CAD and Visualisation** | | |
| **Module code:** | **M4X02235** | **Contribution to Overall Module Assessment (%):** | **50%** |
| **Lecturer:** | **M Archer** | **Internal Verifier:** | **L Mee** |
| **Assignment Title:** | **Fusion 360 Challenge** | **Word count (or equivalent):** | **4 Elements** |
| **Submission deadline:** | **07.05.19** | **Return date of provisional marks & written feedback:** | **03.06.19** |
| **Submission method:** | All written assessments, where practical and possible, must be submitted via Turnitin unless otherwise instructed by the Lecturer. (Please DO NOT put this assessment specification into Turnitin or it will match many similarities with other students' submissions.)<br>**Alternative submission method (if applicable):**<br>**Late submission of the assessment will result in a late penalty mark.** Penalties for late submission: Up to one week late, maximum mark of 40%. Over one week late, 0%. Only the Extenuating Circumstances Panel may approve a change to submission dates. | | |
| **Academic honesty / referencing:** | Academic honesty is required. In the main body of your submission you must give credit to authors on whose research and ideas your work is based. Append to your submission a reference list that indicates the books, articles, etc. that you have used, cited or quoted in order to complete this assessment. | | |

| **Module Learning Outcomes (from module syllabus)** |
|---|
| 1. Understand and effectively apply fundamental solid and surface modelling construction techniques to generate simple 3D objects in virtual environments using appropriate software applications; |

# TASK DESCRIPTION

Read the instructions for the practical task carefully. You **MUST** attempt all elements in Task 1, before attempting the remaining tasks, failure to do so could result in your final mark being capped. The test is OPEN BOOK – you are allowed to refer to all course material, Fusion 360 Courseware Tutorials and the On-line Help facility during the assessment period.

**Tasks:**
Using Fusion 360, you should attempt to model, assemble, draw and render the following:

1. Model (construct) the following components as dimensioned in the attached drawings:

    a. Offset Bracket (Drawing No. SoDAA0002.0/2.1)
    b. Cylinder Support (Drawing No. SoDAA0003.0)
    c. Clamp Bracket (Drawing No. SoDAA0004.0)

Hint – Sketch out the construction steps before starting to model, and accurately define by using dimensions.

*Assessment Criteria: Accuracy of modelling and methodology of construction*
*Task Weighting: 60% (each model – 20%)*

2. **ACCURATELY** reproduce the Engineering Drawing below of the Angle Bracket (Drawing No. SoDAA0001 – model supplied):

    a. You may use the default A3 Landscape template;
    b. You may use the default Title box or construct an identical one as per the drawing;
    c. Dimension as per drawing.

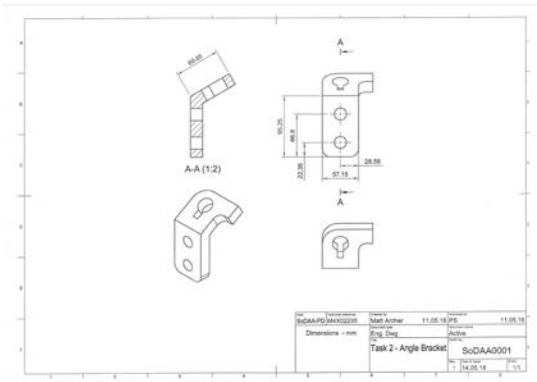

Fig 1

Hint – remember that an Engineering Drawing is a communication medium and should clearly disseminate the visual information i.e. good layout & composition.

*Assessment Criteria: Engineering drawing accuracy, composition and layout*
*Task Weighting: 10%*

3. Using the Wayfarer Sunglasses components, create the following assembly (Fig 2):

   a. Constraint the rotational movement to demonstrate the arms opening and closing as in real life. (Please make sure that the arms do not overlap each other or the body when closed).

Hint – Remember that components are used to create assemblies.

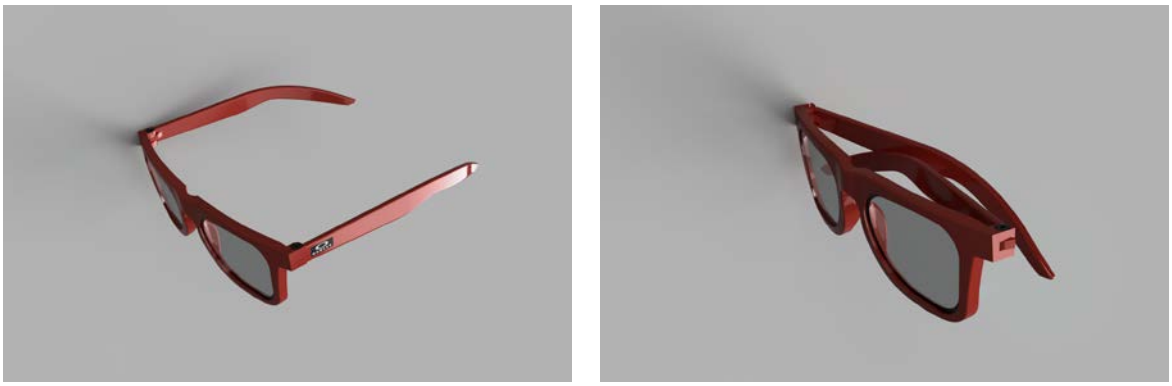

Fig 2

*Assessment Criteria: Completed Assembly configuration as specified*
*Task Weighting: 10%*

4. Render the Wayfarer Sunglasses Assembly as though they were sitting on a table (you will need to construct a plane to sit the sunglasses on). Consider the composition;

   Apply the following material textures & Decal:

   a. Frame: Plastic colour of your choice
   b. Lens: Tinted glass
   c. Screws: Metallic
   d. Decal: Add the Oakley brand logo to each arm; you will need to download a jeg image from the internet

   e. Table plane: Wood (wood grain to the correct scale)

Hint – Make sure you save the render as a jpeg **AND** email me the file.

*Assessment Criteria: Rendering composition and material application*
*Task Weighting: 10%*

5. File Management: ensure all files are named as per their drawings, and organised appropriately.

*Assessment Criteria: Professionalism*
*Task Weighting: 10%*

**Assessment Criteria:**
The Fusion 360 Challenge will be assessed in relation to the specified deliverables as follows:

- LO1 using the common assessment & marking criteria 4

Note: Common assessment & marking criteria weightings are specified in the Guidance section.

**Academic Submission Deliverables:**
Ensure that the following components are saved in your Fusion Folder:

1. Modelled Parts:
   a. Offset Bracket (Drawing No. SoDAA0002.0/2.1)
   b. Cylinder Support (Drawing No. SoDAA0003.0)
   c. Clamp Bracket (Drawing No. SoDAA0004.0)

2. Engineering drawing: Angle Bracket (Drawing No. SoDAA0001)

3. Assembly: Wayfarer Sunglasses

4. Render: Wayfarer Sunglasses jpeg (email: matthew.archer@uwtsd.ac.uk)

**Resources:**
1. Fusion tutorials and on-line resources.

**Submission Deadline: 07.05.19 – 2.5 hours (from the 2.00pm start)**
Digital copy: all specified tasks (named as per the drawings) to be saved within the specified Fusion 360 folder: 2018-19 3D CAD/Matt Archer/YOUR NAME. This Folder has been pre-named.

**Feedback:**
You will be provided with written SUMMATIVE feedback and the opportunity to discuss your performance in a studio tutorial during the week beginning June 3rd 2019. For breakdown of Common Assessment and Marking Criteria into grading categories refer to Moodle.

Please note:
1. It is important you bring the appropriate project work with you to every tutorial relevant to the specific module assignment
2. Your attendance is monitored (as per University regulations).

# GUIDANCE FOR STUDENTS IN THE COMPLETION OF TASKS

**NOTE: The guidance offered below is linked to the five generic assessment criteria overleaf.**

**1. Engagement with Literature Skills (Marks Available: 0 out of 100)**
Your work must be informed and supported by scholarly material that is *relevant* to and *focused* on the task(s) set. You should provide evidence that you have accessed an appropriate *range* of sources, which may be academic, governmental and industrial; these sources may include academic journal articles, textbooks, current news articles, organisational documents, and websites. You should consider the *credibility* of your sources; academic journals are normally highly credible sources while websites require careful consideration/selection and should be used sparingly. Any sources you use should be current and up-to-date, mostly published within the last five years or so, though seminal/important works in the field may be older. You must provide *evidence* of your research/own reading throughout your work, using a suitable referencing system, including in-text citations in the main body of your work and a reference list at the end of your work.

***Guidance specific to this assessment:*** *N/A*

**2. Knowledge and Understanding Skills (Marks Available: 0 out of 100)**
At level 4, you should be able to demonstrate knowledge of the underlying concepts and principles associated with your area(s) of study. *Knowledge* relates to the facts, information and skills you have acquired through your learning. You demonstrate your *understanding* by interpreting the meaning of the facts and information (knowledge). This means that you need to select and include in your work the concepts, techniques, models, theories, etc. appropriate to the task(s) set. You should be able to explain the theories, concepts, etc. to show your understanding. Your mark/grade will also depend upon the *extent* to which you demonstrate your knowledge and understanding.

***Guidance specific to this assessment:*** *N/A*

**3. Cognitive and Intellectual Skills (Marks Available: 0 out of 100)**
You should be able to present, evaluate and interpret qualitative and quantitative data, in order to develop lines of argument and make sound judgements in accordance with basic theories and concepts of your subject(s) of study. You should be able to evaluate the appropriateness of different approaches to solving problems related to your area(s) of study and/or work. Your work must contain evidence of logical, analytical thinking. For example, to examine and break information down into parts, make inferences, compile, compare and contrast information. This means not just describing what! But also justifying: Why? How? When? Who? Where? At what cost? You should provide justification for your arguments and judgements using evidence that you have reflected upon the ideas of others within the subject area and that you are able to make sound judgements and arguments using data and concepts. Where relevant, alternative solutions and recommendations may be proposed.

***Guidance specific to this assessment:*** *N/A*

**4. Practical Skills (Marks Available: 100 out of 100)**
At level 4, you should be able to apply the basic underlying concepts and principles to evaluate and interpret these within the context of your area of study. You should be able to demonstrate how the subject-related concepts and ideas relate to real world situations and/or a particular context. How do they work in practice? You will deploy models, methods, techniques, and/or theories, in that context, to assess current situations, perhaps to formulate plans or solutions to solve problems, or to create artefacts. This is likely to involve, for instance, the use of real world artefacts, examples and cases, the application of a model within an organisation and/or benchmarking one theory or organisation against others based on stated criteria.

***Guidance specific to this assessment:***

- *Demonstrate a clear understanding of fundamental 3D digital modelling, assembly, technical drawing and rendering techniques to generate accurate & realistic outputs.*

**5. Transferable Skills for Life and Professional Practice (Marks Available: 0 out of 100)**

Your work must provide evidence of the qualities and transferable skills necessary for employment requiring the exercise of some personal responsibility. This includes demonstrating: that you can communicate the results of your study/work accurately and reliably, and with structured and coherent arguments; that you can initiate and complete tasks and procedures, whether individually and/or collaboratively; fluency of expression; clarity and effectiveness in presentation and organisation. Work should be coherent and well-structured in presentation and organisation.

***Guidance specific to this assessment:*** *N/A*

## GENERIC ASSESSMENT CRITERIA

| Level 4 |
|---|
| In accordance with the Framework for Higher Education Qualifications, at the end of Level 4 students will be expected to have demonstrated knowledge of the basic underlying concepts and principles of a subject, and an ability to evaluate and interpret these within the context of that area of study. They should be able to present, evaluate and interpret qualitative and quantitative data in order to develop lines of argument and make sound judgements in accordance with basic theories and concepts of their subject(s) of study. They will have learned how to evaluate different approaches to solving problems, and will be able to communicate the results of their study/work accurately and reliably, and with structured and coherent arguments. They will be able to undertake further training and develop new skills within a structured and managed environment and will have the qualities and transferable skills necessary for employment requiring the exercise of some personal responsibility. |

| Level 4 | FAIL | MARGINAL FAIL | SATISFACTORY (3rd / Pass) | GOOD (2.2 / Pass) | VERY GOOD (2.1 / Merit) | EXCELLENT (1st / Distinction) | EXCEPTIONAL (1st / Distinction) |
|---|---|---|---|---|---|---|---|
| **Category** | **0-29%** | **30-39%** | **40-49%** | **50-59%** | **60-69%** | **70-84%** | **85-100%** |
| **Engagement with literature** (including reading, referencing, academic conventions and academic honesty) | Little or no evidence of reading and/or reliance on inappropriate sources. Views and findings mostly unsupported and non-authoritative. Referencing conventions used incoherently or largely absent. | Poor engagement with essential reading. No evidence of wider reading. Reliance on inappropriate sources, and/or indiscriminate use of sources. Heavily reliant on information gained through class contact. Inconsistent and weak use of referencing. | Engagement with a limited range of mostly relevant and credible sources but with some reliance on information gained through class contact. Some omissions and minor errors. Referencing conventions evident though not always applied accurately or consistently. | Engagement with an appropriate range of literature, including sources retrieved independently. Some over-reliance on texts rather than other sources. Referencing may show minor inaccuracies or inconsistencies. | Engagement with a wide range of literature, including sources retrieved independently. Selection of relevant and credible sources. Generally sound referencing, with no/very few inaccuracies or inconsistencies. | Engagement with an extensive range of relevant and credible literature. Consistently accurate application of referencing. | Exceptional engagement with an extensive range of relevant and credible literature. High-level referencing skills consistently applied. |
| **Knowledge and understanding** (Knowledge of the basic underlying concepts and | Major gaps in knowledge and understanding of the basic underlying concepts and | Gaps in knowledge of the basic underlying concepts and principles, with flawed or | Limited knowledge and understanding of the basic underlying concepts and | Knowledge of the basic underlying concepts and principles is accurate with a | Competent knowledge of the basic underlying concepts and principles. Exhibits very | Excellent knowledge and understanding of the basic underlying concepts and | Exceptional, detailed knowledge and understanding of the basic underlying |

| Level 4 | FAIL | MARGINAL FAIL | SATISFACTORY (3rd / Pass) | GOOD (2.2 / Pass) | VERY GOOD (2.1 / Merit) | EXCELLENT (1st / Distinction) | EXCEPTIONAL (1st / Distinction) |
|---|---|---|---|---|---|---|---|
| **Category** | **0-29%** | **30-39%** | **40-49%** | **50-59%** | **60-69%** | **70-84%** | **85-100%** |
| principles of a subject.) | principles of the subject matter. Inclusion of irrelevant material. Substantial inaccuracies. | superficial understanding. Some significant inaccuracies and/or irrelevant material. | principles within the subject area. Some elements may be missing. | good understanding of the field of study but lacks depth and/or breadth. | good understanding. | principles of the subject. | concepts and principles |
| **Cognitive and intellectual skills** (Evaluate underlying concepts and principles of a subject and interpret qualitative and quantitative data in order to develop lines of argument and make sound judgements.) | Wholly or almost wholly descriptive work. Little or no evaluation of the underlying concepts and principles. Failure to develop arguments, leading to illogical or invalid judgements. Minimal or no use of evidence to back up views. | Largely descriptive work, with superficial evaluation of the underlying concepts and principles. Weak interpretation of data, flawed development of arguments and judgements. Information accepted uncritically, uses generalised statements made with scant evidence and unsubstantiated opinions. Ideas sometimes illogical and contradictory. | Limited attempt at evaluation of the underlying concepts and principles, tending towards description. Can interpret qualitative and quantitative data but with some errors. Some evidence to support emerging arguments and judgements but these may be underdeveloped or with a little inconsistency / mis-interpretation. | Good evaluation of the underlying concepts and principles. Can interpret qualitative and quantitative data, with minor errors. An emerging ability to use evidence to support the argument. Mostly valid arguments and logical judgements. | Sound evaluation of the underlying concepts and principles. Can interpret qualitative and quantitative data accurately. Ability to devise arguments using evidence to make mostly appropriate and valid judgements. | Excellent evaluation of the underlying concepts and principles. Can interpret qualitative and quantitative data accurately and with some insight. Excellent ability to devise arguments using evidence and make appropriate and valid judgements. | Exceptional evaluation of the underlying concepts and principles based evidence. Outstanding interpretation of qualitative and quantitative data. Exceptional ability to devise arguments using evidence and make wholly appropriate and valid judgements. |
| **Practical skills** (Different approaches to solving problems in particular contexts.) | Limited or no use of taught, basic methods, materials, tools and/or techniques. Little or no appreciation of the context of the application. | Rudimentary application of taught, basic methods, materials, tools and/or techniques but without consideration and | An adequate awareness and mostly appropriate application of basic methods, materials, tools and/or techniques. | A good and appropriate application of basic methods, materials, tools and/or techniques. Clear appreciation of | A very good application of a range of basic methods, materials, tools and/or techniques. Very good consideration of the context of | An advanced application of a range of taught, basic methods, materials, tools and/or techniques. The context of the application is | Exceptional levels of application and deployment skills in particular practical contexts. Outstanding identification of |

| Level 4 | FAIL | MARGINAL FAIL | SATISFACTORY (3rd / Pass) | GOOD (2.2 / Pass) | VERY GOOD (2.1 / Merit) | EXCELLENT (1st / Distinction) | EXCEPTIONAL (1st / Distinction) |
|---|---|---|---|---|---|---|---|
| **Category** | **0-29%** | **30-39%** | **40-49%** | **50-59%** | **60-69%** | **70-84%** | **85-100%** |
| | Very weak evidence of different approaches to problem-solving in particular contexts. | competence. Flawed appreciation of the context of the application. Weak evidence of different approaches to problem-solving in particular contexts. | Basic appreciation of the context of the application. Can identify problems in particular contexts and propose basic alternative approaches or solutions though there may be errors. | the context of the application. Good evidence of different approaches to problem-solving in particular contexts and proposes mostly appropriate solutions. | the application. Very good evidence of different approaches to problem-solving in particular contexts and proposes appropriate solutions. | well considered, and insightful. Excellent evidence of different approaches to problem-solving in particular contexts and proposes appropriate solutions. | problems in particular contexts and formulation of wholly appropriate, thoughtful solutions / different approaches. |
| **Transferable skills for life and professional practice** (Communicate the results of their study/work accurately and reliably, and with structured and coherent arguments; the qualities needed for employment requiring the exercise of some personal responsibility within a structured and managed environment.) | Work is poorly structured, disorganised, inaccurate and/or confusingly expressed. Very weak use of language and/or very inappropriate style. Failure to work effectively individual or as part of a group. Little or no evidence of the skills for employment requiring the exercise of some personal responsibility. | Work is poorly presented in a disjointed manner. It is loosely, and at times incoherently, structured, with information and ideas often poorly expressed. Weak use of language and/or inappropriate style. Flawed approach to individual or group work, meeting only partial obligations to others. Limited evidence of the skills for employment requiring the | Mostly ordered presentation and structure in which relevant ideas / concepts are reasonably expressed. Work may lack coherence and/or accuracy in places. Can work as part of a group, meeting most obligations to others but perhaps with limited involvement in group activities. Demonstrates the basic skills for employment requiring the exercise of some personal responsibility, with some areas | Mostly coherent, organised and accurate work, in a suitable structure and is for the most part clearly expressed. Can work effectively independently and/or as part of a team, with clear contribution to group activities. Demonstrates the skills for employment requiring the exercise of some personal responsibility, with some areas of strength and some of minor weakness. | Work is accurate, coherent, fluent, well-structured and organised. Can work effectively independently and/or as part of a team, with very good contribution to group activities. Demonstrates very good skills for employment requiring the exercise of some personal responsibility, with just occasional minor weakness. | Work is coherent, very fluent and is presented professionally. Can work effectively independently and/or as part of a team, with an excellent contribution to group activities. Demonstrates excellent skills for employment requiring the exercise of some personal responsibility with an appetite for further development. | Work is accurate, exceptionally coherent, very fluent and presented well. Can work effectively independently and/or as part of a team, with an exceptional contribution to group activities. Demonstrates exceptional skills for employment requiring the exercise of some personal responsibility with an appetite for further development. |

| Level 4 | FAIL | MARGINAL FAIL | SATISFACTORY (3rd / Pass) | GOOD (2.2 / Pass) | VERY GOOD (2.1 / Merit) | EXCELLENT (1st / Distinction) | EXCEPTIONAL (1st / Distinction) |
|---|---|---|---|---|---|---|---|
| **Category** | **0-29%** | **30-39%** | **40-49%** | **50-59%** | **60-69%** | **70-84%** | **85-100%** |
| | | exercise of some personal responsibility. | of minor weakness. | | | | |

**THIS DOCUMENT IS ALSO AVAILABLE IN WELSH**

OFFSET BRACKET
DRAWING NO. SoDAA0002.0
DIMENSIONS IN MM

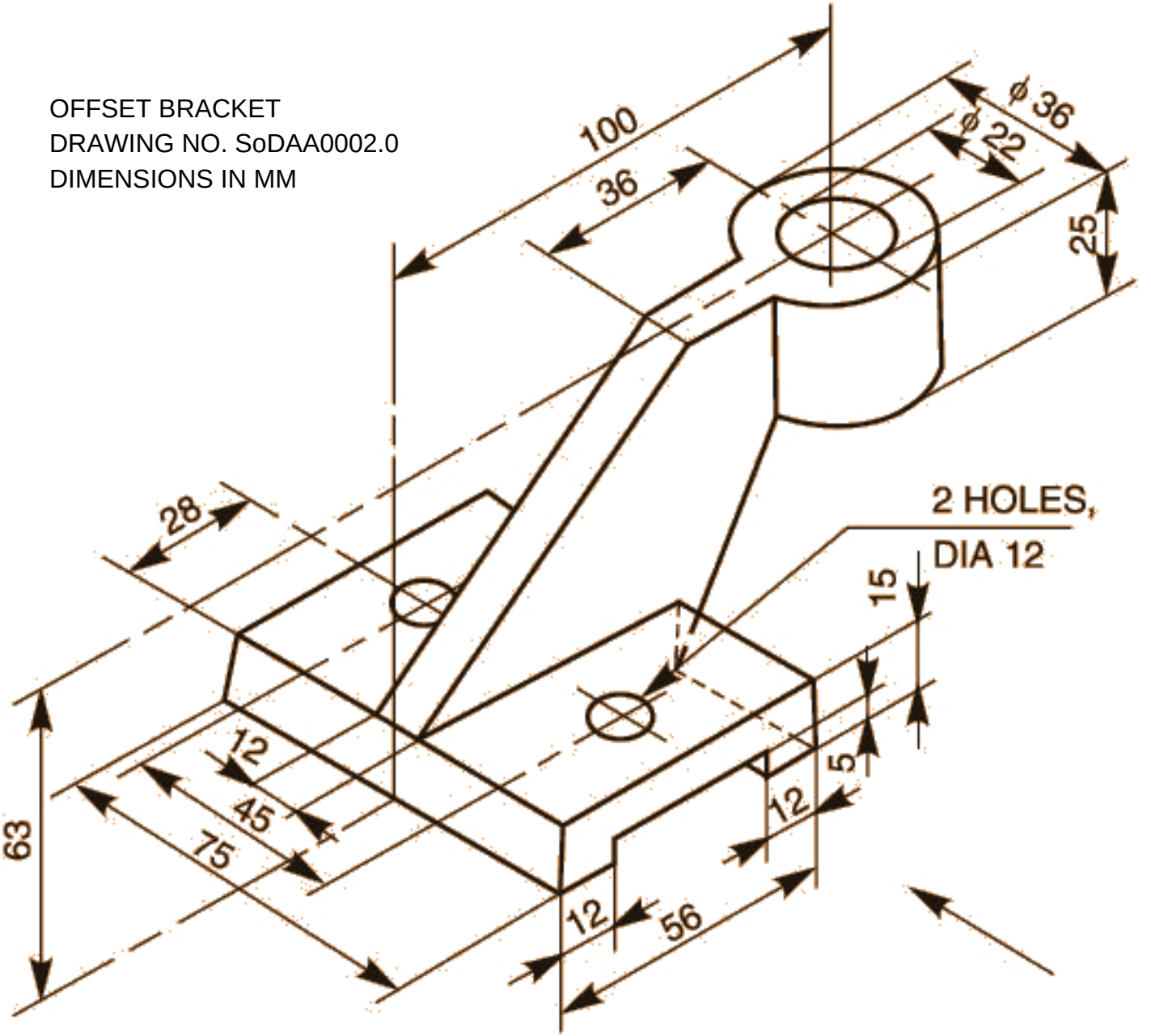

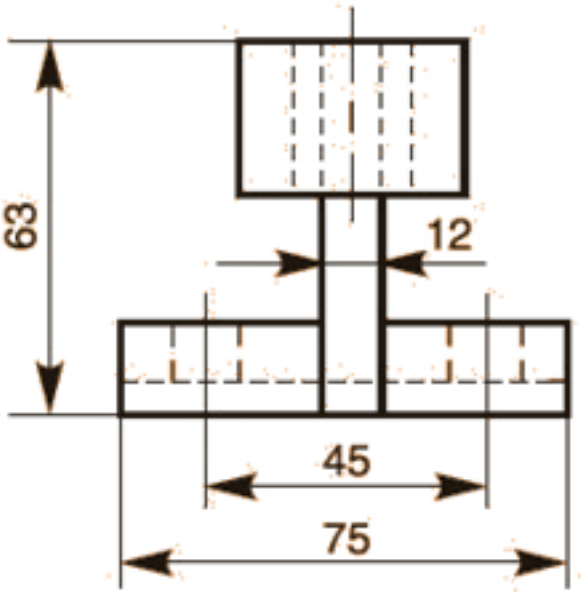


right side view

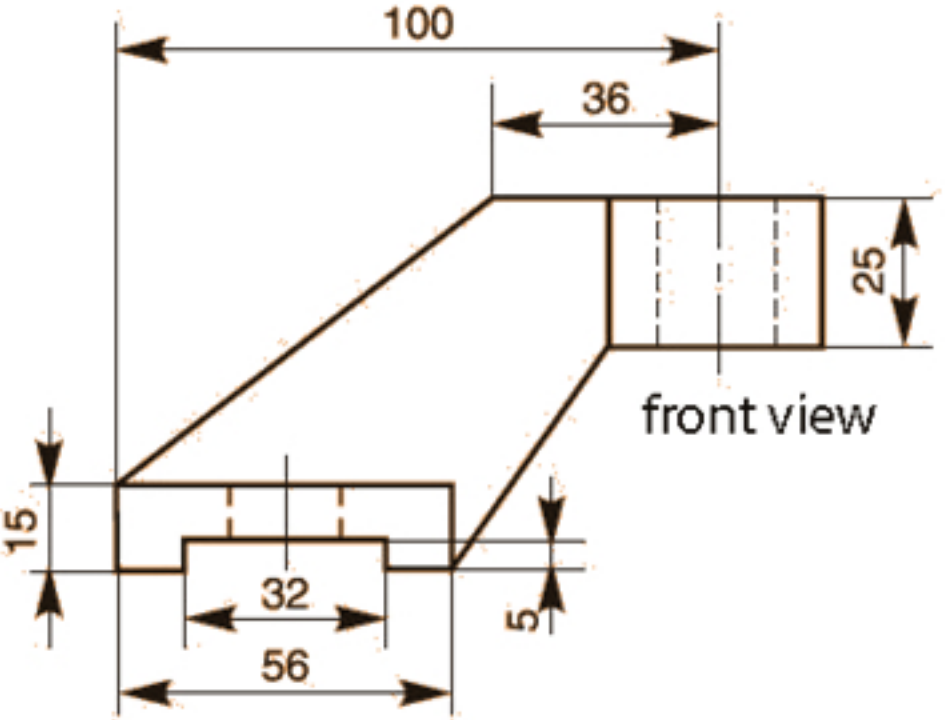


front view

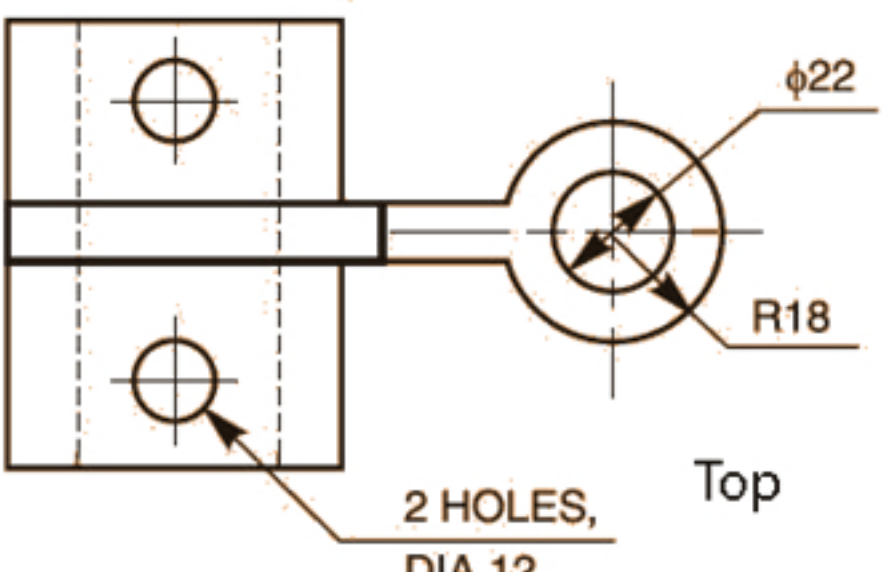


Top

OFFSET BRACKET
DRAWING NO. SoDAA0002.1
DIMENSIONS IN MM

DIMENSIONS IN INCHES

DRAWING NO. SoDAA0003.0

# Cylinder support

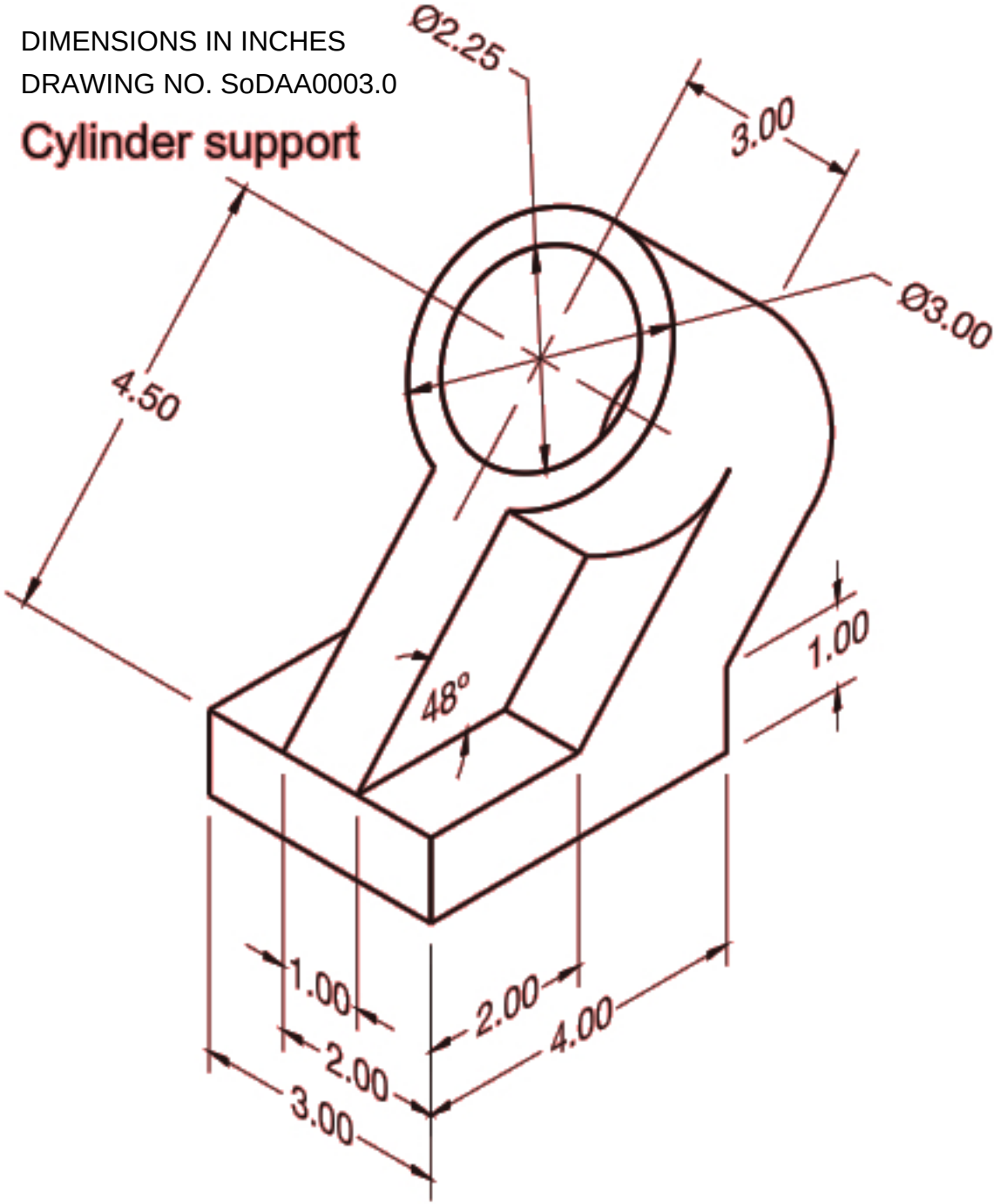

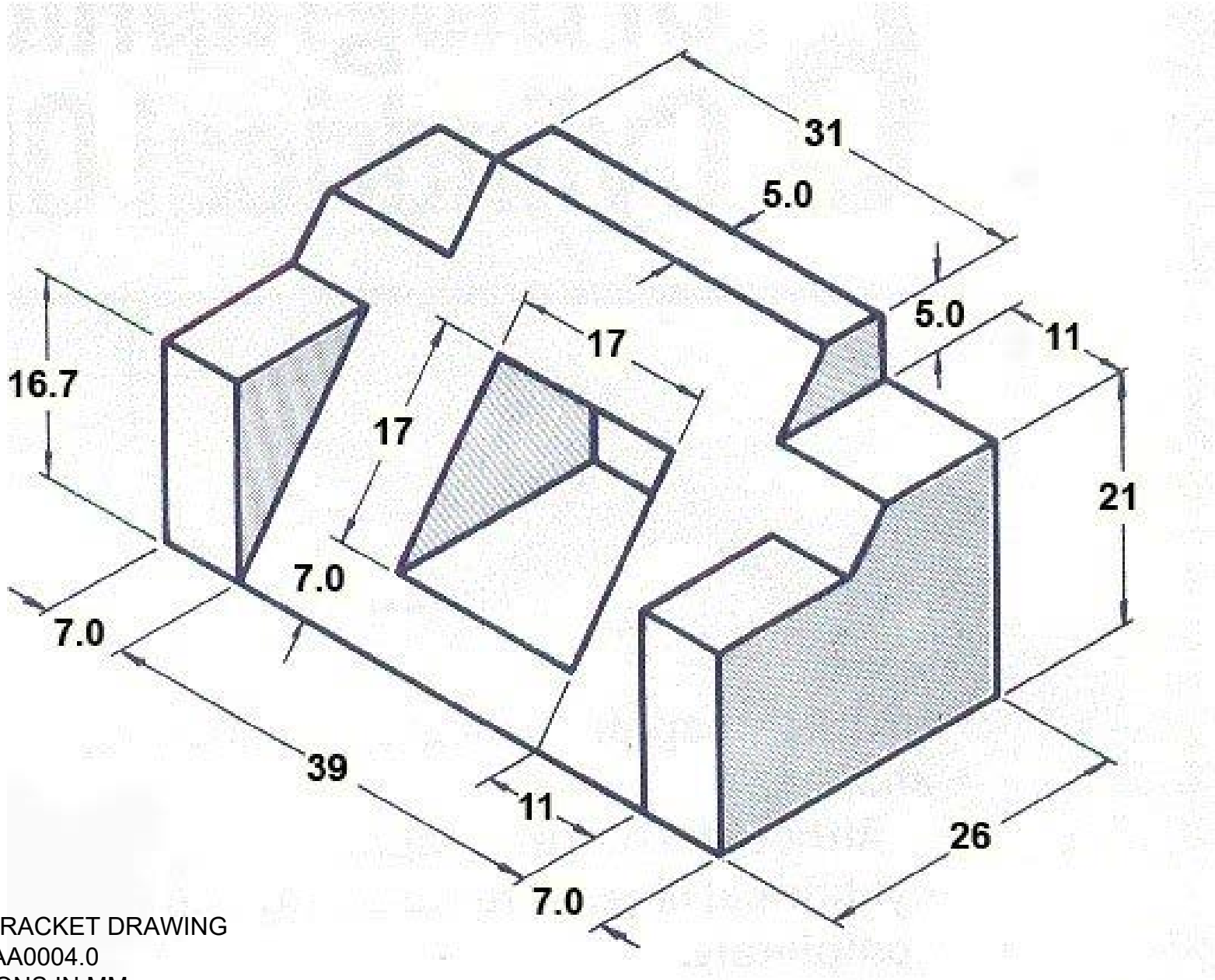


CLAMP BRACKET DRAWING
NO. SoDAA0004.0
DIMENSIONS IN MM

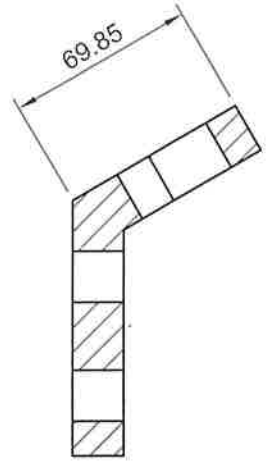


A-A (1:2)

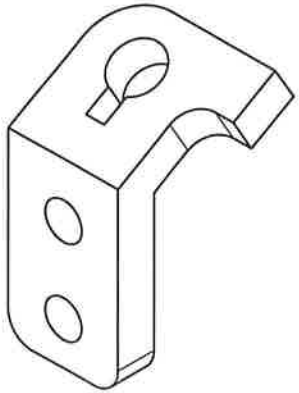

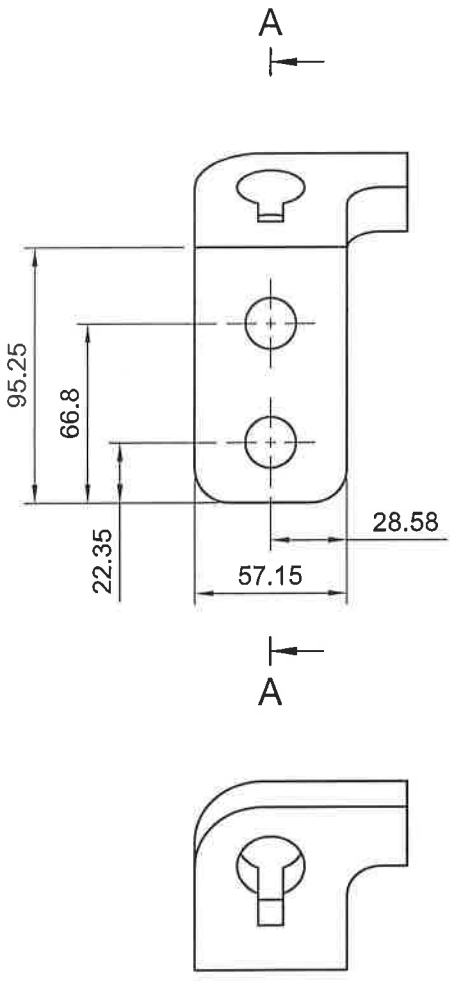


| Dept. | Technical reference | Created by | Approved by |
|---|---|---|---|
| SoDAA-PD | M4X02235 | Matt Archer 11.05.18 | PS 11.05.18 |
| Dimensions - mm | | Document type: Eng. Dwg | Document status: Active |
| | | Title: Task 2 - Angle Bracket | DWG No.: SoDAA0001 |
| | | | Rev.: 1 · Date of issue: 14.05.18 · Sheet: 1/1 |