BRITISH STANDARD

BS EN 1992-1-1:2004 +A1:2014

Incorporating corrigenda January 2008, November 2010 and January 2014

Eurocode 2: Design of concrete structures —

Part 1-1: General rules and rules for buildings

ICS 91.010.30; 91.080.40

NO COPYING WITHOUT BSI PERMISSION EXCEPT AS PERMITTED BY COPYRIGHT LAW

British Standards

Licensed copy:University of Wales Trinity Saint David, 12/03/2020, Uncontrolled Copy, © BSI

National foreword

This British Standard is the UK implementation of EN 1992-1-1:2004+A1:2014, incorporating corrigendum January 2008 and November 2010. It supersedes BS EN 1992-1-1:2004 which is withdrawn.

The start and finish of text introduced or altered by amendment is indicated in the text by tags. Tags indicating changes to CEN text carry the number of the CEN amendment. For example, text altered by CEN amendment A1 is indicated by [A1⟩ ⟨A1].

The start and finish of text introduced or altered by corrigendum is indicated in the text by tags. For example, text altered by CEN corrigendum January 2008 is indicated in the text by [AC1⟩ ⟨AC1] and CEN corrigendum November 2010 by [AC2⟩ ⟨AC2].

The UK participation in its preparation was entrusted by Technical Committee B/525, Building and civil engineering structures, to Subcommittee B/525/2, Structural use of concrete.

A list of organizations represented on this subcommittee can be obtained on request to its secretary.

Where a normative part of this EN allows for a choice to be made at the national level, the range and possible choice will be given in the normative text, and a note will qualify it as a Nationally Determined Parameter (NDP). NDPs can be a specific value for a factor, a specific level or class, a particular method or a particular application rule if several are proposed in the EN.

To enable EN 1992-1-1 to be used in the UK, the NDPs are published in a National Annex, which is available from BSI.

This publication does not purport to include all the necessary provisions of a contract. Users are responsible for its correct application.

Compliance with a British Standard cannot confer immunity from legal obligations.

This British Standard was published under the authority of the Standards Policy and Strategy Committee on 23 December 2004

© The British Standards Institution 2015. Published by BSI Standards Limited 2015

ISBN 978 0 580 83726 5

Amendments/corrigenda issued since publication

Date	Comments
30 June 2008	Implementation of CEN corrigendum January 2008
31 August 2011	Implementation of CEN corrigendum November 2010
31 January 2014	Expressions 6.60, 6.61 and 6.62 corrected
31 July 2015	Implementation of CEN amendment A1:2014

Licensed copy:University of Wales Trinity Saint David, 12/03/2020, Uncontrolled Copy, © BSI

Licensed copy:University of Wales Trinity Saint David, 12/03/2020, Uncontrolled Copy, © BSI

EUROPEAN STANDARD

NORME EUROPÉENNE

EUROPÄISCHE NORM

EN 1992-1-1:2004+A1

December 2014

ICS 91.010.30; 91.080.40

Incorporating corrigenda January 2008 and November 2010

English version

Eurocode 2: Design of concrete structures - Part 1-1: General rules and rules for buildings

Eurocode 2: Calcul des structures en béton - Partie 1-1 : Règles générales et règles pour les bâtiments

Eurocode 2: Bemessung und konstruktion von Stahlbeton- und Spannbetontragwerken - Teil 1-1: Allgemeine Bemessungsregeln und Regeln für den Hochbau

This European Standard was approved by CEN on 16 April 2004.

CEN members are bound to comply with the CEN/CENELEC Internal Regulations which stipulate the conditions for giving this European Standard the status of a national standard without any alteration. Up-to-date lists and bibliographical references concerning such national standards may be obtained on application to the Central Secretariat or to any CEN member.

This European Standard exists in three official versions (English, French, German). A version in any other language made by translation under the responsibility of a CEN member into its own language and notified to the Central Secretariat has the same status as the official versions.

CEN members are the national standards bodies of Austria, Belgium, Cyprus, Czech Republic, Denmark, Estonia, Finland, France, Germany, Greece, Hungary, Iceland, Ireland, Italy, Latvia, Lithuania, Luxembourg, Malta, Netherlands, Norway, Poland, Portugal, Slovakia, Slovenia, Spain, Sweden, Switzerland and United Kingdom.

EUROPEAN COMMITTEE FOR STANDARDIZATION
COMITÉ EUROPÉEN DE NORMALISATION
EUROPÄISCHES KOMITEE FÜR NORMUNG

Management Centre: Avenue Marnix 17, B-1000 Brussels

© 2004 CEN All rights of exploitation in any form and by any means reserved worldwide for CEN national Members.

Ref. No. EN 1992-1-1:2004: E

Contents List

1. General
1.1 Scope
1.1.1 Scope of Eurocode 2
1.1.2 Scope of Part 1-1 of Eurocode 2
1.2 Normative references
1.2.1 General reference standards
1.2.2 Other reference standards
1.3 Assumptions
1.4 Distinction between principles and application rules
1.5 Definitions
1.5.1 General
1.5.2 Additional terms and definitions used in this Standard
1.5.2.1 Precast structures
1.5.2.2 Plain or lightly reinforced concrete members
1.5.2.3 Unbonded and external tendons
1.5.2.4 Prestress
1.6 Symbols
2. Basis of design
2.1 Requirements
2.1.1 Basic requirements
2.1.2 Reliability management
2.1.3 Design working life, durability and quality management
2.2 Principles of limit state design
2.3 Basic variables
2.3.1 Actions and environment influences
2.3.1.1 General
2.3.1.2 Thermal effects
2.3.1.3 Differential settlements/movements
2.3.1.4 Prestress
2.3.2 Material and product properties
2.3.2.1 General
2.3.2.2 Shrinkage and creep
2.3.3 Deformations of concrete
2.3.4 Geometric data
2.3.4.1 General
2.3.4.2 Supplementary requirements for cast in place piles
2.4 Verification by the partial factor method
2.4.1 General
2.4.2 Design values
2.4.2.1 Partial factor for shrinkage action
2.4.2.2 Partial factors for prestress
2.4.2.3 Partial factor for fatigue loads
2.4.2.4 Partial factors for materials
2.4.2.5 Partial factors for materials for foundations
2.4.3 Combinations of actions
2.4.4 Verification of static equilibrium - EQU
2.5 Design assisted by testing
2.6 Supplementary requirements for foundations
2.7 Requirements for fastenings

Licensed copy:University of Wales Trinity Saint David, 12/03/2020, Uncontrolled Copy, © BSI

3. Materials
3.1 Concrete
3.1.1 General
3.1.2 Strength
3.1.3 Elastic deformation
3.1.4 Creep and shrinkage
3.1.5 Stress-strain relation for non-linear structural analysis
3.1.6 Design compressive and tensile strengths
3.1.7 Stress-strain relations for the design of sections
3.1.8 Flexural tensile strength
3.1.9 Confined concrete
3.2 Reinforcing steel
3.2.1 General
3.2.2 Properties
3.2.3 Strength
3.2.4 Ductility characteristics
3.2.5 Welding
3.2.6 Fatigue
3.2.7 Design assumptions
3.3 Prestressing steel
3.3.1 General
3.3.2 Properties
3.3.3 Strength
3.3.4 Ductility characteristics
3.3.5 Fatigue
3.3.6 Design assumptions
3.3.7 Prestressing tendons in sheaths
3.4 Prestressing devices
3.4.1 Anchorages and couplers
3.4.1.1 General
3.4.1.2 Mechanical properties
3.4.1.2.1 Anchored tendons
3.4.1.2.2 Anchored devices and anchorage zones
3.4.2 External non-bonded tendons
3.4.2.1 General
3.4.2.2 Anchorages
4. Durability and cover to reinforcement
4.1 General
4.2 Environmental conditions
4.3 Requirements for durability
4.4 Methods of verifications
4.4.1 Concrete cover
4.4.1.1 General
4.4.1.2 Minimum cover, c_{min}
4.4.1.3 Allowance in design for tolerance
5. Structural analysis
5.1 General
5.1.1 General requirements
5.1.2 Special requirements for foundations
5.1.3 Load cases and combinations
5.1.4 Second order effects

Licensed copy:University of Wales Trinity Saint David, 12/03/2020, Uncontrolled Copy, © BSI

5.2 Geometric imperfections
5.3 Idealisation of the structure
5.3.1 Structural models for overall analysis
5.3.2 Geometric data
5.3.2.1 Effective width of flanges (all limit states)
5.3.2.2 Effective span of beams and slabs in buildings
5.4 Linear elastic analysis
5.5 Linear analysis with limited redistribution
5.6 Plastic analysis
5.6.1 General
5.6.2 Plastic analysis for beams, frames and slabs
5.6.3 Rotation capacity
5.6.4 Analysis with struts and tie models
5.7 Non-linear analysis
5.8 Analysis of second order effects with axial load
5.8.1 Definitions
5.8.2 General
5.8.3 Simplified criteria for second order effects
5.8.3.1 Slenderness Criterion for isolated members
5.8.3.2 Slenderness and effective length of isolated members
5.8.3.3 Global second order effects in buildings
5.8.4 Creep
5.8.5 Methods of analysis
5.8.6 General method
5.8.7 Method based on nominal stiffness
5.8.7.1 General
5.8.7.2 Nominal stiffness
5.8.7.3 Moment magnification factor
5.8.8 Method based on nominal curvature
5.8.8.1 General
5.8.8.2 Bending moments
5.8.8.3 Curvature
5.8.9 Biaxial bending
5.9 Lateral instability of slender beams
5.10 Prestressed members and structures
5.10.1 General
5.10.2 Prestressing force during tensioning
5.10.2.1 Maximum stressing force
5.10.2.2 Limitation of concrete stress
5.10.2.3 Measurements
5.10.3 Prestress force
5.10.4 Immediate losses of prestress for pre-tensioning
5.10.5 Immediate losses of prestress for post-tensioning
5.10.5.1 Losses due to the instantaneous deformation of concrete
5.10.5.2 Losses due to friction
5.10.5.3 Losses at anchorage
5.10.6 Time dependent losses of prestress for pre- and post-tensioning
5.10.7 Consideration of prestress in analysis
5.10.8 Effects of prestressing at ultimate limit state
5.10.9 Effects of prestressing at serviceability limit state and limit state of fatigue
5.11 Analysis for some particular structural members

Licensed copy:University of Wales Trinity Saint David, 12/03/2020, Uncontrolled Copy, © BSI

6. Ultimate limit states (ULS)
6.1 Bending with or without axial force
6.2 Shear
6.2.1 General verification procedure
6.2.2 Members not requiring design shear reinforcement
6.2.3 Members requiring design shear reinforcement
6.2.4 Shear between web and flanges
6.2.5 Shear at the interface between concretes cast at different times
6.3 Torsion
6.3.1 General
6.3.2 Design procedure
6.3.3 Warping torsion
6.4 Punching
6.4.1 General
6.4.2 Load distribution and basic control perimeter
6.4.3 Punching shear calculation
6.4.4 Punching shear resistance of slabs and column bases without shear reinforcement
6.4.5 Punching shear resistance of slabs and column bases with shear reinforcement
6.5 Design with strut and tie models
6.5.1 General
6.5.2 Struts
6.5.3 Ties
6.5.4 Nodes
6.6 Anchorages and laps
6.7 Partially loaded areas
6.8 Fatigue
6.8.1 Verification conditions
6.8.2 Internal forces and stresses for fatigue verification
6.8.3 Combination of actions
6.8.4 Verification procedure for reinforcing and prestressing steel
6.8.5 Verification using damage equivalent stress range
6.8.6 Other verifications
6.8.7 Verification of concrete under compression or shear
7. Serviceability limit states (SLS)
7.1 General
7.2 Stress limitation
7.3 Crack control
7.3.1 General considerations
7.3.2 Minimum reinforcement areas
7.3.3 Control of cracking without direct calculation
7.3.4 Calculation of crack widths
7.4 Deflection control
7.4.1 General considerations
7.4.2 Cases where calculations may be omitted
7.4.3 Checking deflections by calculation
8 Detailing of reinforcement and prestressing tendons - General
8.1 General
8.2 Spacing of bars
8.3 Permissible mandrel diameters for bent bars
8.4 Anchorage of longitudinal reinforcement
8.4.1 General

Licensed copy:University of Wales Trinity Saint David, 12/03/2020, Uncontrolled Copy, © BSI

8.4.2 Ultimate bond stress
8.4.3 Basic anchorage length
8.4.4 Design anchorage length
8.5 Anchorage of links and shear reinforcement
8.6 Anchorage by welded bars
8.7 Laps and mechanical couplers
8.7.1 General
8.7.2 Laps
8.7.3 Lap length
8.7.4 Transverse reinforcement in the lap zone
8.7.4.1 Transverse reinforcement for bars in tension
8.7.4.2 Transverse reinforcement for bars permanently in compression
8.7.5 Laps for welded mesh fabrics made of ribbed wires
8.7.5.1 Laps of the main reinforcement
8.7.5.2 Laps of secondary or distribution reinforcement
8.8 Additional rules for large diameter bars
8.9 Bundled bars
8.9.1 General
8.9.2 Anchorage of bundles of bars
8.9.3 Lapping bundles of bars
8.10 Prestressing tendons
8.10.1 Arrangement of prestressing tendons and ducts
8.10.1.1 General
8.10.1.2 Pre-tensioned tendons
8.10.1.3 Post-tension ducts
8.10.2 Anchorage of pre-tensioned tendons
8.10.2.1 General
8.10.2.2 Transfer of prestress
8.10.2.3 Anchorage of tendons for the ultimate limit state
8.10.3 Anchorage zones of post-tensioned members
8.10.4 Anchorages and couplers for prestressing tendons
8.10.5 Deviators
9. Detailing of members and particular rules
9.1 General
9.2 Beams
9.2.1 Longitudinal reinforcement
9.2.1.1 Minimum and maximum reinforcement areas
9.2.1.2 Other detailing arrangements
9.2.1.3 Curtailment of the longitudinal tension reinforcement
9.2.1.4 Anchorage of bottom reinforcement at an end support
9.2.1.5 Anchorage of bottom reinforcement at intermediate supports
9.2.2 Shear reinforcement
9.2.3 Torsion reinforcement
9.2.4 Surface reinforcement
9.2.5 Indirect supports
9.3 Solid slabs
9.3.1 Flexural reinforcement
9.3.1.1 General
9.3.1.2 Reinforcement in slabs near supports
9.3.1.3 Corner reinforcement
9.3.1.4 Reinforcement at the free edges

Licensed copy:University of Wales Trinity Saint David, 12/03/2020, Uncontrolled Copy, © BSI

9.3.2 Shear reinforcement
9.4 Flat slabs
9.4.1 Slab at internal columns
9.4.2 Slab at edge columns
9.4.3 Punching shear reinforcement
9.5 Columns
9.5.1 General
9.5.2 Longitudinal reinforcement
9.5.3 Transverse reinforcement
9.6 Walls
9.6.1 General
9.6.2 Vertical reinforcement
9.6.3 Horizontal reinforcement
9.6.4 Transverse reinforcement
9.7 Deep beams
9.8 Foundations
9.8.1 Pile caps
9.8.2 Column and wall footings
9.8.2.1 General
9.8.2.2 Anchorage of bars
9.8.3 Tie beams
9.8.4 Column footing on rock
9.8.5 Bored piles
9.9 Regions with discontinuity in geometry or action
9.10 Tying systems
9.10.1 General
9.10.2 Proportioning of ties
9.10.2.1 General
9.10.2.2 Peripheral ties
9.10.2.3 Internal ties
9.10.2.4 Horizontal ties to columns and/or walls
9.10.2.5 Vertical ties
9.10.3 Continuity and anchorage of ties
10. Additional rules for precast concrete elements and structures
10.1 General
10.1.1 Special terms used in this section
10.2 Basis of design, fundamental requirements
10.3 Materials
10.3.1 Concrete
10.3.1.1 Strength
10.3.1.2 Creep and shrinkage
10.3.1 Prestressing steel
10.3.2.1 Technological properties of prestressing steel
10.5 Structural analysis
10.5.1 General
10.5.2 Losses of prestress
10.9 Particular rules for design and detailing
10.9.1 Restraining moments in slabs
10.9.2 Wall to floor connections
10.9.3 Floor systems
10.9.4 Connections and supports for precast elements

Licensed copy:University of Wales Trinity Saint David, 12/03/2020, Uncontrolled Copy, © BSI

10.9.4.1 Materials
10.9.4.2 General rules for design and detailing of connections
10.9.4.3 Connections transmitting compressive forces
10.9.4.4 Connections transmitting shear forces
10.9.4.5 Connections transmitting bending moments or tensile forces
10.9.4.6 Half joints
10.9.4.7 Anchorage of reinforcement at supports
10.9.5 Bearings
10.9.5.1 General
10.9.5.2 Bearings for connected (non-isolated) members
10.9.5.3 Bearings for isolated members
10.9.6 Pocket foundations
10.9.6.1 General
10.9.6.2 Pockets with keyed surfaces
10.9.6.3 Pockets with smooth surfaces
10.9.7 Tying systems
11. Lightweight aggregated concrete structures
11.1 General
11.1.1 Scope
11.1.2 Special symbols
11.2 Basis of design
11.3 Materials
11.3.1 Concrete
11.3.2 Elastic deformation
11.3.3 Creep and shrinkage
11.3.4 Stress-strain relations for structural analysis
11.3.5 Design compressive and tensile strengths
11.3.6 Stress-strain relations for the design of sections
11.3.7 Confined concrete
11.4 Durability and cover to reinforcement
11.4.1 Environmental conditions
11.4.2 Concrete cover and properties of concrete
11.5 Structural analysis
11.5.1 Rotational capacity
11.6 Ultimate limit states
11.6.1 Members not requiring design shear reinforcement
11.6.2 Members requiring design shear reinforcement
11.6.3 Torsion
11.6.3.1 Design procedure
11.6.4 Punching
11.6.4.1 Punching shear resistance of slabs and column bases without shear reinforcement
11.6.4.2 Punching shear resistance of slabs and column bases with shear reinforcement
11.6.5 Partially loaded areas
11.6.6 Fatigue
11.7 Serviceability limit states
11.8 Detailing of reinforcement - General
11.8.1 Permissible mandrel diameters for bent bars
11.8.2 Ultimate bond stress
11.9 Detailing of members and particular rules

Licensed copy:University of Wales Trinity Saint David, 12/03/2020, Uncontrolled Copy, © BSI

11.10 Additional rules for precast concrete elements and structures
11.12 Plain and lightly reinforced concrete structures
12. Plain and lightly reinforced concrete structures
12.1 General
12.2 Basis of design
12.2.1 Strength
12.3 Materials
12.3.1 Concrete: additional design assumptions
12.5 Structural analysis: ultimate Limit states
12.6 Ultimate limit states
12.6.1 Design resistance to bending and axial force
12.6.2 Local Failure
12.6.3 Shear
12.6.4 Torsion
12.6.5 Ultimate limit states induced by structural deformation (buckling)
12.6.5.1 Slenderness of columns and walls
12.6.5.2 Simplified design method for walls and columns
12.7 Serviceability limit states
12.9 Detailing of members and particular rules
12.9.1 Structural members
12.9.2 Construction joints
12.9.3 Strip and pad footings

Annexes

A (Informative) Modification of partial factors for materials
B (Informative) Creep and shrinkage strain
C (Normative) Reinforcement properties
D (Informative) Detailed calculation method for prestressing steel relaxation losses
E (Informative) Indicative Strength Classes for durability
F (Informative) Reinforcement expressions for in-plane stress conditions
G (Informative) Soil structure interaction
H (Informative) Global second order effects in structures
I (Informative) Analysis of flat slabs and shear walls
J (Informative) Examples of regions with discontinuity in geometry or action

Foreword

This European Standard EN 1992, Eurocode 2: Design of concrete structures: General rules and rules for buildings, has been prepared by Technical Committee CEN/TC250 « Structural Eurocodes », the Secretariat of which is held by BSI. CEN/TC250 is responsible for all Structural Eurocodes.

This European Standard shall be given the status of a National Standard, either by publication of an identical text or by endorsement, at the latest by June 2005, and conflicting National Standards shall be withdrawn at latest by March 2010.

This Eurocode supersedes ENV 1992-1-1, 1992-1-3, 1992-1-4, 1992-1-5, 1992-1-6 and 1992-3.

According to the CEN-CENELEC Internal Regulations, the National Standard Organisations of the following countries are bound to implement these European Standard: Austria, Belgium, Cyprus, Czech Republic, Denmark, Estonia, Finland, France, Germany, Greece, Hungary,

Licensed copy:University of Wales Trinity Saint David, 12/03/2020, Uncontrolled Copy, © BSI

Iceland, Ireland, Italy, Latvia, Lithuania, Luxembourg, Malta, Netherlands, Norway, Poland, Portugal, Slovakia, Slovenia, Spain, Sweden, Switzerland and United Kingdom.

Foreword to amendment A1

This document (EN 1992-1-1:2004/A1:2014) has been prepared by Technical Committee CEN/TC 250 "Structural Eurocodes", the secretariat of which is held by BSI.

This Amendment to the European Standard EN 1992-1-1:2004 shall be given the status of a national standard, either by publication of an identical text or by endorsement, at the latest by December 2015, and conflicting national standards shall be withdrawn at the latest by December 2015.

Attention is drawn to the possibility that some of the elements of this document may be the subject of patent rights. CEN [and/or CENELEC] shall not be held responsible for identifying any or all such patent rights.

This document has been prepared under a mandate given to CEN by the European Commission and the European Free Trade Association.

According to the CEN-CENELEC Internal Regulations, the national standards organizations of the following countries are bound to implement this European Standard: Austria, Belgium, Bulgaria, Croatia, Cyprus, Czech Republic, Denmark, Estonia, Finland, Former Yugoslav Republic of Macedonia, France, Germany, Greece, Hungary, Iceland, Ireland, Italy, Latvia, Lithuania, Luxembourg, Malta, Netherlands, Norway, Poland, Portugal, Romania, Slovakia, Slovenia, Spain, Sweden, Switzerland, Turkey and the United Kingdom.

Background to the Eurocode programme

In 1975, the Commission of the European Community decided on an action programme in the field of construction, based on article 95 of the Treaty. The objective of the programme was the elimination of technical obstacles to trade and the harmonisation of technical specifications.

Within this action programme, the Commission took the initiative to establish a set of harmonised technical rules for the design of construction works which, in a first stage, would serve as an alternative to the national rules in force in the Member States and, ultimately, would replace them.

For fifteen years, the Commission, with the help of a Steering Committee with Representatives of Member States, conducted the development of the Eurocodes programme, which led to the first generation of European codes in the 1980s.

In 1989, the Commission and the Member States of the EU and EFTA decided, on the basis of an agreement[1] between the Commission and CEN, to transfer the preparation and the publication of the Eurocodes to CEN through a series of Mandates, in order to provide them with a future status of European Standard (EN). This links *de facto* the Eurocodes with the provisions of all the Council's Directives and/or Commission's Decisions dealing with European standards (*e.g.* the Council Directive 89/106/EEC on construction products - CPD - and Council Directives 93/37/EEC, 92/50/EEC and 89/440/EEC on public works and services and equivalent EFTA Directives initiated in pursuit of setting up the internal market).

[1] Agreement between the Commission of the European Communities and the European Committee for Standardisation (CEN) concerning the work on EUROCODES for the design of building and civil engineering works (BC/CEN/03/89).

Licensed copy:University of Wales Trinity Saint David, 12/03/2020, Uncontrolled Copy, © BSI

Licensed copy:University of Wales Trinity Saint David, 12/03/2020, Uncontrolled Copy, © BSI

The Structural Eurocode programme comprises the following standards generally consisting of a number of Parts:

EN 1990	Eurocode 0:	Basis of Structural Design
EN 1991	Eurocode 1:	Actions on structures
EN 1992	Eurocode 2:	Design of concrete structures
EN 1993	Eurocode 3:	Design of steel structures
EN 1994	Eurocode 4:	Design of composite steel and concrete structures
EN 1995	Eurocode 5:	Design of timber structures
EN 1996	Eurocode 6:	Design of masonry structures
EN 1997	Eurocode 7:	Geotechnical design
EN 1998	Eurocode 8:	Design of structures for earthquake resistance
EN 1999	Eurocode 9:	Design of aluminium structures

Eurocode standards recognise the responsibility of regulatory authorities in each Member State and have safeguarded their right to determine values related to regulatory safety matters at national level where these continue to vary from State to State.

Status and field of application of eurocodes

The Member States of the EU and EFTA recognise that Eurocodes serve as reference documents for the following purposes :

– as a means to prove compliance of building and civil engineering works with the essential requirements of Council Directive 89/106/EEC, particularly Essential Requirement N°1 – Mechanical resistance and stability – and Essential Requirement N°2 – Safety in case of fire;

– as a basis for specifying contracts for construction works and related engineering services;

– as a framework for drawing up harmonised technical specifications for construction products (ENs and ETAs)

The Eurocodes, as far as they concern the construction works themselves, have a direct relationship with the Interpretative Documents[2] referred to in Article 12 of the CPD, although they are of a different nature from harmonised product standards[3]. Therefore, technical aspects arising from the Eurocodes work need to be adequately considered by CEN Technical Committees and/or EOTA Working Groups working on product standards with a view to achieving full compatibility of these technical specifications with the Eurocodes.

The Eurocode standards provide common structural design rules for everyday use for the design of whole structures and component products of both a traditional and an innovative nature. Unusual forms of construction or design conditions are not specifically covered and additional expert consideration will be required by the designer in such cases.

---

[2] According to Art. 3.3 of the CPD, the essential requirements (ERs) shall be given concrete form in interpretative documents for the creation of the necessary links between the essential requirements and the mandates for harmonised ENs and ETAGs/ETAs.

[3] According to Art. 12 of the CPD the interpretative documents shall :
a) give concrete form to the essential requirements by harmonising the terminology and the technical bases and indicating classes or levels for each requirement where necessary ;
b) indicate methods of correlating these classes or levels of requirement with the technical specifications, *e.g.* methods of calculation and of proof, technical rules for project design, etc. ;
c) serve as a reference for the establishment of harmonised standards and guidelines for European technical approvals.

The Eurocodes, *de facto*, play a similar role in the field of the ER 1 and a part of ER 2.

Licensed copy:University of Wales Trinity Saint David, 12/03/2020, Uncontrolled Copy, © BSI

National Standards implementing Eurocodes

The National Standards implementing Eurocodes will comprise the full text of the Eurocode (including any annexes), as published by CEN, which may be preceded by a National title page and National foreword, and may be followed by a National annex.

The National annex may only contain information on those parameters which are left open in the Eurocode for national choice, known as Nationally Determined Parameters, to be used for the design of buildings and civil engineering works to be constructed in the country concerned, *i.e.* :

– values and/or classes where alternatives are given in the Eurocode,
– values to be used where a symbol only is given in the Eurocode,
– country specific data (geographical, climatic, etc.), *e.g.* snow map,
– the procedure to be used where alternative procedures are given in the Eurocode.

It may contain

– decisions on the application of informative annexes,
– references to non-contradictory complementary information to assist the user to apply the Eurocode.

Links between Eurocodes and harmonised technical specifications (ENs and ETAs) for products

There is a need for consistency between the harmonised technical specifications for construction products and the technical rules for works[4]. Furthermore, all the information accompanying the CE Marking of the construction products which refer to Eurocodes should clearly mention which Nationally Determined Parameters have been taken into account.

Additional information specific to EN 1992-1-1

EN 1992-1-1 describes the principles and requirements for safety, serviceability and durability of concrete structures, together with specific provisions for buildings. It is based on the limit state concept used in conjunction with a partial factor method.

For the design of new structures, EN 1992-1-1 is intended to be used, for direct application, together with other parts of EN 1992, Eurocodes EN 1990,1991, 1997 and 1998.

EN 1992-1-1 also serves as a reference document for other CEN TCs concerning structural matters.

EN 1992-1-1 is intended for use by:

– committees drafting other standards for structural design and related product, testing and execution standards;
– clients (e.g. for the formulation of their specific requirements on reliability levels and durability);
– designers and constructors ;
– relevant authorities.

Numerical values for partial factors and other reliability parameters are recommended as basic values that provide an acceptable level of reliability. They have been selected assuming that an appropriate level of workmanship and of quality management applies. When EN 1992-1-1 is used as a base document by other CEN/TCs the same values need to be taken.

[4] see Art.3.3 and Art.12 of the CPD, as well as clauses 4.2, 4.3.1, 4.3.2 and 5.2 of ID 1.

Licensed copy:University of Wales Trinity Saint David, 12/03/2020, Uncontrolled Copy, © BSI

National annex for EN 1992-1-1

This standard gives values with notes indicating where national choices may have to be made. Therefore the National Standard implementing EN 1992-1-1 should have a National annex containing all Nationally Determined Parameters to be used for the design of buildings and civil engineering works to be constructed in the relevant country.

National choice is allowed in EN 1992-1-1 through the following clauses:

2.3.3 (3)
2.4.2.1 (1)
2.4.2.2 (1)
2.4.2.2 (2)
2.4.2.2 (3)
2.4.2.3 (1)
2.4.2.4 (1)
2.4.2.4 (2)
2.4.2.5 (2)
3.1.2 (2)P
3.1.2 (4)
3.1.6 (1)P
3.1.6 (2)P
3.2.2 (3)P
3.2.7 (2)
3.3.4 (5)
3.3.6 (7)
4.4.1.2 (3)
4.4.1.2 (5)
4.4.1.2 (6)
4.4.1.2 (7)
4.4.1.2 (8)
4.4.1.2 (13)
4.4.1.3 (1)P
4.4.1.3 (3)
4.4.1.3 (4)
5.1.3 (1)P
5.2 (5)
5.5 (4)
5.6.3 (4)
5.8.3.1 (1)
5.8.3.3 (1)
5.8.3.3 (2)
5.8.5 (1)
5.8.6 (3)
5.10.1 (6)
5.10.2.1 (1)P
5.10.2.1 (2)
5.10.2.2 (4)
5.10.2.2 (5)
5.10.3 (2)
5.10.8 (2)
5.10.8 (3)
5.10.9 (1)P
6.2.2 (1)
6.2.2 (6)
6.2.3 (2)
6.2.3 (3)
6.2.4 (4)
6.2.4 (6)
6.4.3 (6)
6.4.4 (1)
[A1⟩ 6.4.5 (1) ⟨A1]
6.4.5 (3)
6.4.5 (4)
6.5.2 (2)
6.5.4 (4)
6.5.4 (6)
6.8.4 (1)
6.8.4 (5)
6.8.6 (1)
[AC1⟩ 6.8.6 (3) ⟨AC1]
6.8.7 (1)
7.2 (2)
7.2 (3)
7.2 (5)
7.3.1 (5)
7.3.2 (4)
7.3.4 (3)
7.4.2 (2)
8.2 (2)
8.3 (2)
8.6 (2)
8.8 (1)
9.2.1.1 (1)
9.2.1.1 (3)
9.2.1.2 (1)
9.2.1.4 (1)
9.2.2 (4)
9.2.2 (5)
9.2.2 (6)
9.2.2 (7)
9.2.2 (8)
9.3.1.1(3)
9.5.2 (1)
9.5.2 (2)
9.5.2 (3)
9.5.3 (3)
9.6.2 (1)
9.6.3 (1)
9.7 (1)
9.8.1 (3)
9.8.2.1 (1)
9.8.3 (1)
9.8.3 (2)
9.8.4 (1)
9.8.5 (3)
9.10.2.2 (2)
9.10.2.3 (3)
9.10.2.3 (4)
9.10.2.4 (2)
11.3.5 (1)P
11.3.5 (2)P
11.3.7 (1)
11.6.1 (1)
11.6.1 (2)
11.6.2 (1)
11.6.4.1 (1)
12.3.1 (1)
12.6.3 (2)
A.2.1 (1)
A.2.1 (2)
A.2.2 (1)
A.2.2 (2)
A.2.3 (1)
C.1 (1)
C.1 (3)
E.1 (2)
[AC1⟩ J.1 (2) ⟨AC1]
J.2.2 (2)
J.3 (2)
J.3 (3)

Licensed copy:University of Wales Trinity Saint David, 12/03/2020, Uncontrolled Copy, © BSI

blank

Licensed copy:University of Wales Trinity Saint David, 12/03/2020, Uncontrolled Copy, © BSI

SECTION 1 GENERAL

1.1 Scope

1.1.1 Scope of Eurocode 2

(1)P Eurocode 2 applies to the design of buildings and civil engineering works in plain, reinforced and prestressed concrete. It complies with the principles and requirements for the safety and serviceability of structures, the basis of their design and verification that are given in EN 1990: Basis of structural design.

(2)P Eurocode 2 is only concerned with the requirements for resistance, serviceability, durability and fire resistance of concrete structures. Other requirements, e.g. concerning thermal or sound insulation, are not considered.

(3)P Eurocode 2 is intended to be used in conjunction with:

EN 1990:	Basis of structural design
EN 1991:	Actions on structures
hEN's:	Construction products relevant for concrete structures
ENV 13670:	Execution of concrete structures
EN 1997:	Geotechnical design
EN 1998:	Design of structures for earthquake resistance, when concrete structures are built in seismic regions.

(4)P Eurocode 2 is subdivided into the following parts:

Part 1.1:	General rules and rules for buildings
Part 1.2:	Structural fire design
Part 2:	Reinforced and prestressed concrete bridges
Part 3:	Liquid retaining and containing structures

1.1.2 Scope of Part 1-1 of Eurocode 2

(1)P Part 1-1 of Eurocode 2 gives a general basis for the design of structures in plain, reinforced and prestressed concrete made with normal and light weight aggregates together with specific rules for buildings.

(2)P The following subjects are dealt with in Part 1-1.

Section 1:	General
Section 2:	Basis of design
Section 3:	Materials
Section 4:	Durability and cover to reinforcement
Section 5:	Structural analysis
Section 6:	Ultimate limit states
Section 7:	Serviceability limit states
Section 8:	Detailing of reinforcement and prestressing tendons - General
Section 9:	Detailing of members and particular rules

Licensed copy:University of Wales Trinity Saint David, 12/03/2020, Uncontrolled Copy, © BSI

Section 10: Additional rules for precast concrete elements and structures
Section 11: Lightweight aggregate concrete structures
Section 12: Plain and lightly reinforced concrete structures

(3)P Sections 1 and 2 provide additional clauses to those given in EN 1990 “Basis of structural design”.

(4)P This Part 1-1 does not cover:
- the use of plain reinforcement
- resistance to fire;
- particular aspects of special types of building (such as tall buildings);
- particular aspects of special types of civil engineering works (such as viaducts, bridges, dams, pressure vessels, offshore platforms or liquid-retaining structures);
- no-fines concrete and aerated concrete components, and those made with heavy aggregate or containing structural steel sections (see Eurocode 4 for composite steel-concrete structures).

1.2 Normative references

(1)P The following normative documents contain provisions which, through references in this text, constitutive provisions of this European standard. For dated references, subsequent amendments to or revisions of any of these publications do not apply. However, parties to agreements based on this European standard are encouraged to investigate the possibility of applying the most recent editions of the normative documents indicated below. For undated references the latest edition of the normative document referred to applies.

1.2.1 General reference standards

EN 1990: Basis of structural design
EN 1991-1-5: Actions on structures: Thermal actions
EN 1991-1-6: Actions on structures: Actions during execution

1.2.2 Other reference standards

EN1997: Geotechnical design
EN 197-1: Cement: Composition, specification and conformity criteria for common cements
EN 206-1: Concrete: Specification, performance, production and conformity
EN 12390: Testing hardened concrete
EN 10080: Steel for the reinforcement of concrete
EN 10138: Prestressing steels
AC1 EN ISO 17660 (all parts): Welding – Welding of reinforcing steel AC1
ENV 13670: Execution of concrete structures
EN 13791: Testing concrete
EN ISO 15630 Steel for the reinforcement and prestressing of concrete: Test methods

1.3 Assumptions

(1)P In addition to the general assumptions of EN 1990 the following assumptions apply:
- Structures are designed by appropriately qualified and experienced personnel.

Licensed copy:University of Wales Trinity Saint David, 12/03/2020, Uncontrolled Copy, © BSI

- Adequate supervision and quality control is provided in factories, in plants, and on site.
- Construction is carried out by personnel having the appropriate skill and experience.
- The construction materials and products are used as specified in this Eurocode or in the relevant material or product specifications.
- The structure will be adequately maintained.
- The structure will be used in accordance with the design brief.
- The requirements for execution and workmanship given in ENV 13670 are complied with.

1.4 Distinction between principles and application rules

(1)P The rules given in EN 1990 apply.

1.5 Definitions

1.5.1 General

(1)P The terms and definitions given in EN 1990 apply.

1.5.2 Additional terms and definitions used in this Standard

1.5.2.1 Precast structures. Precast structures are characterised by structural elements manufactured elsewhere than in the final position in the structure. In the structure, elements are connected to ensure the required structural integrity.

1.5.2.2 Plain or lightly reinforced concrete members. Structural concrete members having no reinforcement (plain concrete) or less reinforcement than the minimum amounts defined in Section 9.

1.5.2.3 Unbonded and external tendons. Unbonded tendons for post-tensioned members having ducts which are permanently ungrouted, and tendons external to the concrete cross-section (which may be encased in concrete after stressing, or have a protective membrane).

1.5.2.4 Prestress. The process of prestressing consists in applying forces to the concrete structure by stressing tendons relative to the concrete member. “Prestress” is used globally to name all the permanent effects of the prestressing process, which comprise internal forces in the sections and deformations of the structure. Other means of prestressing are not considered in this standard.

1.6 Symbols

For the purposes of this standard, the following symbols apply.

Note: The notation used is based on ISO 3898:1987

Latin upper case letters

A	Accidental action
A	Cross sectional area
A_c	Cross sectional area of concrete
A_p	Area of a prestressing tendon or tendons

Licensed copy:University of Wales Trinity Saint David, 12/03/2020, Uncontrolled Copy, © BSI

A_s Cross sectional area of reinforcement
$A_{s,min}$ minimum cross sectional area of reinforcement
A_{sw} Cross sectional area of shear reinforcement
D Diameter of mandrel
D_{Ed} Fatigue damage factor
E Effect of action
E_c, $E_{c(28)}$ Tangent modulus of elasticity of normal weight concrete at a stress of $\sigma_c = 0$ and at 28 days
$E_{c,eff}$ Effective modulus of elasticity of concrete
E_{cd} Design value of modulus of elasticity of concrete
E_{cm} Secant modulus of elasticity of concrete
$E_c(t)$ Tangent modulus of elasticity of normal weight concrete at a stress of $\sigma_c = 0$ and at time t
E_p Design value of modulus of elasticity of prestressing steel
E_s Design value of modulus of elasticity of reinforcing steel
EI Bending stiffness
EQU Static equilibrium
F Action
F_d Design value of an action
F_k Characteristic value of an action
G_k Characteristic permanent action
I Second moment of area of concrete section
L Length
M Bending moment
M_{Ed} Design value of the applied internal bending moment
N Axial force
N_{Ed} Design value of the applied axial force (tension or compression)
P Prestressing force
P_0 Initial force at the active end of the tendon immediately after stressing
Q_k Characteristic variable action
Q_{fat} Characteristic fatigue load
R Resistance
S Internal forces and moments
S First moment of area
SLS Serviceability limit state
T Torsional moment
T_{Ed} Design value of the applied torsional moment
ULS Ultimate limit state
V Shear force
V_{Ed} Design value of the applied shear force

Latin lower case letters

a Distance
a Geometrical data
Δa Deviation for geometrical data
b Overall width of a cross-section, or actual flange width in a T or L beam
b_w Width of the web on T, I or L beams
d Diameter ; Depth
d Effective depth of a cross-section

Licensed copy:University of Wales Trinity Saint David, 12/03/2020, Uncontrolled Copy, © BSI

d_g	Largest nominal maximum aggregate size
e	Eccentricity
f_c	Compressive strength of concrete
f_{cd}	Design value of concrete compressive strength
f_{ck}	Characteristic compressive cylinder strength of concrete at 28 days
f_{cm}	Mean value of concrete cylinder compressive strength
f_{ctk}	Characteristic axial tensile strength of concrete
f_{ctm}	Mean value of axial tensile strength of concrete
f_p	Tensile strength of prestressing steel
f_{pk}	Characteristic tensile strength of prestressing steel
$f_{p0,1}$	0,1% proof-stress of prestressing steel
$f_{p0,1k}$	Characteristic 0,1% proof-stress of prestressing steel
$f_{0,2k}$	Characteristic 0,2% proof-stress of reinforcement
f_t	Tensile strength of reinforcement
f_{tk}	Characteristic tensile strength of reinforcement
f_y	Yield strength of reinforcement
f_{yd}	Design yield strength of reinforcement
f_{yk}	Characteristic yield strength of reinforcement
f_{ywd}	Design yield of shear reinforcement
h	Height
h	Overall depth of a cross-section
i	Radius of gyration
k	Coefficient ; Factor
l	(or l or L) Length; Span
m	Mass
r	Radius
$1/r$	Curvature at a particular section
t	Thickness
t	Time being considered
t_0	The age of concrete at the time of loading
u	Perimeter of concrete cross-section, having area A_c
u,v,w	Components of the displacement of a point
x	Neutral axis depth
x,y,z	Coordinates
z	Lever arm of internal forces

Greek lower case letters

α	Angle ; ratio
β	Angle ; ratio; coefficient
γ	Partial factor
γ_A	Partial factor for accidental actions A
γ_C	Partial factor for concrete
γ_F	Partial factor for actions, F
$\gamma_{F,fat}$	Partial factor for fatigue actions
$\gamma_{C,fat}$	Partial factor for fatigue of concrete
γ_G	Partial factor for permanent actions, G
γ_M	Partial factor for a material property, taking account of uncertainties in the material property itself, in geometric deviation and in the design model used

Licensed copy:University of Wales Trinity Saint David, 12/03/2020, Uncontrolled Copy, © BSI

γ_P Partial factor for actions associated with prestressing, P
γ_Q Partial factor for variable actions, Q
γ_S Partial factor for reinforcing or prestressing steel
$\gamma_{S,fat}$ Partial factor for reinforcing or prestressing steel under fatigue loading
γ_f Partial factor for actions without taking account of model uncertainties
γ_g Partial factor for permanent actions without taking account of model uncertainties
γ_m Partial factors for a material property, taking account only of uncertainties in the material property
δ Increment/redistribution ratio
ζ Reduction factor/distribution coefficient
ε_c Compressive strain in the concrete
ε_{c1} Compressive strain in the concrete at the peak stress f_c
ε_{cu} Ultimate compressive strain in the concrete
ε_u Strain of reinforcement or prestressing steel at maximum load
ε_{uk} Characteristic strain of reinforcement or prestressing steel at maximum load
θ Angle
λ Slenderness ratio
μ Coefficient of friction between the tendons and their ducts
ν Poisson's ratio
ν Strength reduction factor for concrete cracked in shear
ξ Ratio of bond strength of prestressing and reinforcing steel
ρ Oven-dry density of concrete in kg/m^3
ρ_{1000} Value of relaxation loss (in %), at 1000 hours after tensioning and at a mean temperature of 20°C
ρ_l Reinforcement ratio for longitudinal reinforcement
ρ_w Reinforcement ratio for shear reinforcement
σ_c Compressive stress in the concrete
σ_{cp} Compressive stress in the concrete from axial load or prestressing
σ_{cu} Compressive stress in the concrete at the ultimate compressive strain ε_{cu}
τ Torsional shear stress
ϕ Diameter of a reinforcing bar or of a prestressing duct
ϕ_n Equivalent diameter of a bundle of reinforcing bars
$\varphi(t,t_0)$ Creep coefficient, defining creep between times t and t_0 , related to elastic deformation at 28 days
$\varphi(\infty,t_0)$ Final value of creep coefficient
ψ Factors defining representative values of variable actions
ψ_0 for combination values
ψ_1 for frequent values
ψ_2 for quasi-permanent values

Licensed copy:University of Wales Trinity Saint David, 12/03/2020, Uncontrolled Copy, © BSI

SECTION 2 BASIS OF DESIGN

2.1 Requirements

2.1.1 Basic requirements

(1)P The design of concrete structures shall be in accordance with the general rules given in EN 1990.

(2)P The supplementary provisions for concrete structures given in this section shall also be applied.

(3) The basic requirements of EN 1990 Section 2 are deemed to be satisfied for concrete structures when the following are applied together:

- limit state design in conjunction with the partial factor method in accordance with EN 1990,
- actions in accordance with EN 1991,
- combination of actions in accordance with EN 1990 and
- resistances, durability and serviceability in accordance with this Standard.

Note: Requirements for fire resistance (see EN 1990 Section 5 and EN 1992-1-2) may dictate a greater size of member than that required for structural resistance at normal temperature.

2.1.2 Reliability management

(1) The rules for reliability management are given in EN 1990 Section 2.

(2) A design using the partial factors given in this Eurocode (see 2.4) and the partial factors given in the EN 1990 annexes is considered to lead to a structure associated with reliability Class RC2.

Note: For further information see EN 1990 Annexes B and C.

2.1.3 Design working life, durability and quality management

(1) The rules for design working life, durability and quality management are given in EN 1990 Section 2.

2.2 Principles of limit state design

(1) The rules for limit state design are given in EN 1990 Section 3.

2.3 Basic variables

2.3.1 Actions and environmental influences

2.3.1.1 General

(1) Actions to be used in design may be obtained from the relevant parts of EN 1991.

Note 1: The relevant parts of EN1991 for use in design include:

Licensed copy:University of Wales Trinity Saint David, 12/03/2020, Uncontrolled Copy, © BSI

EN 1991-1.1 Densities, self-weight and imposed loads
EN 1991-1. 2 Fire actions
EN 1991-1.3 Snow loads
EN 1991-1.4 Wind loads
EN 1991-1.5 Thermal actions
EN 1991-1.6 Actions during execution
EN 1991-1.7 Accidental actions due to impact and explosions
EN 1991-2 Traffic loads on bridges
EN 1991-3 Actions induced by cranes and other machinery
EN 1991-4 Actions in silos and tanks

Note 2: Actions specific to this Standard are given in the relevant sections.

Note 3: Actions from earth and water pressure may be obtained from EN 1997.

Note 4: When differential movements are taken into account, appropriate estimate values of predicted movements may be used.

Note 5: Other actions, when relevant, may be defined in the design specification for a particular project.

2.3.1.2 Thermal effects

(1) Thermal effects should be taken into account when checking serviceability limit states.

(2) Thermal effects should be considered for ultimate limit states only where they are significant (e.g. fatigue conditions, in the verification of stability where second order effects are of importance, etc). In other cases they need not be considered, provided that the ductility and rotation capacity of the elements are sufficient.

(3) Where thermal effects are taken into account they should be considered as variable actions and applied with a partial factor and ψ factor.

Note: The ψ factor is defined in the relevant annex of EN 1990 and EN 1991-1-5.

2.3.1.3 Differential settlements/movements

(1) Differential settlements/movements of the structure due to soil subsidence should be classified as a permanent action, G_{set} which is introduced as such in combinations of actions. In general, G_{set} is represented by a set of values corresponding to differences (compared to a reference level) of settlements/movements between individual foundations or part of foundations, $d_{set,i}$ (i denotes the number of the individual foundation or part of foundation).

Note: Where differential settlements are taken into account, appropriate estimate values of predicted settlements may be used.

(2) The effects of differential settlements should generally be taken into account for the verification for serviceability limit states.

(3) For ultimate limit states they should be considered only where they are significant (e.g. fatigue conditions, in the verification of stability where second order effects are of importance, etc). In other cases for ultimate limit states they need not be considered, provided that the ductility and rotation capacity of the elements are sufficient.

(4) Where differential settlements are taken into account a partial safety factor for settlement effects should be applied.

Licensed copy:University of Wales Trinity Saint David, 12/03/2020, Uncontrolled Copy, © BSI

Note: The value of the partial safety factor for settlement effects is defined in the relevant annex of EN1990.

2.3.1.4 Prestress

(1)P The prestress considered in this Eurocode is applied by tendons made of high-strength steel (wires, strands or bars).

(2) Tendons may be embedded in the concrete. They may be pre-tensioned and bonded or post-tensioned and bonded or unbonded.

(3) Tendons may also be external to the structure with points of contact occurring at deviators and anchorages.

(4) Provisions concerning prestress are found in 5.10.

2.3.2 Material and product properties

2.3.2.1 General

(1) The rules for material and product properties are given in EN 1990 Section 4.

(2) Provisions for concrete, reinforcement and prestressing steel are given in Section 3 or the relevant Product Standard.

2.3.2.2 Shrinkage and creep

(1) Shrinkage and creep are time-dependent properties of concrete. Their effects should generally be taken into account for the verification of serviceability limit states.

(2) The effects of shrinkage and creep should be considered at ultimate limit states only where their effects are significant, for example in the verification of ultimate limit states of stability where second order effects are of importance. In other cases these effects need not be considered for ultimate limit states, provided that ductility and rotation capacity of the elements are sufficient.

(3) When creep is taken into account its design effects should be evaluated under the quasi-permanent combination of actions irrespective of the design situation considered i.e. persistent, transient or accidental.

Note: In most cases the effects of creep may be evaluated under permanent loads and the mean value of prestress.

2.3.3 Deformations of concrete

(1)P The consequences of deformation due to temperature, creep and shrinkage shall be considered in design.

(2) The influence of these effects is normally accommodated by complying with the application rules of this Standard. Consideration should also be given to:

- minimising deformation and cracking due to early-age movement, creep and shrinkage through the composition of the concrete mix;
- minimising restraints to deformation by the provision of bearings or joints;

Licensed copy:University of Wales Trinity Saint David, 12/03/2020, Uncontrolled Copy, © BSI

- if restraints are present, ensuring that their influence is taken into account in design.

(3) In building structures, temperature and shrinkage effects may be omitted in global analysis provided joints are incorporated at every distance d_{joint} to accommodate resulting deformations.

Note: The value of d_{joint} is subject to a National Annex. The recommended value is 30 m. For precast concrete structures the value may be larger than that for cast in-situ structures, since part of the creep and shrinkage takes place before erection.

2.3.4 Geometric data

2.3.4.1 General

(1) The rules for geometric data are given in EN 1990 Section 4.

2.3.4.2 Supplementary requirements for cast in place piles

(1)P Uncertainties related to the cross-section of cast in place piles and concreting procedures shall be allowed for in design.

(2) In the absence of other provisions the diameter used in design calculations, of cast in place piles without permanent casing should be taken as:

- if $d_{nom} < 400$ mm $\quad d = d_{nom} - 20$ mm
- if $400 \leq d_{nom} \leq 1000$ mm $\quad d = 0{,}95.d_{nom}$
- if $d_{nom} > 1000$ mm $\quad d = d_{nom} - 50$ mm

Where d_{nom} is the nominal diameter of the pile.

2.4 Verification by the partial factor method

2.4.1 General

(1) The rules for the partial factor method are given in EN 1990 Section 6.

2.4.2 Design values

2.4.2.1 Partial factor for shrinkage action

(1) Where consideration of shrinkage actions is required for ultimate limit state a partial factor, γ_{SH}, should be used.

Note: The value of γ_{SH} for use in a Country may be found in its National Annex. The recommended value is 1,0.

2.4.2.2 Partial factors for prestress

(1) Prestress in most situations is intended to be favourable and for the ultimate limit state verification the value of $\gamma_{P,fav}$ should be used. The design value of prestress may be based on the mean value of the prestressing force (see EN 1990 Section 4).

Note: The value of $\gamma_{P,fav}$ for use in a Country may be found in its National Annex. The recommended value for persistent and transient design situations is 1,0. This value may also be used for fatigue verification.

Licensed copy:University of Wales Trinity Saint David, 12/03/2020, Uncontrolled Copy, © BSI

(2) In the verification of the limit state for stability with external prestress, where an increase of the value of prestress can be unfavourable, $\gamma_{P,unfav}$ should be used.

Note: The value of $\gamma_{P,unfav}$ in the stability limit state for use in a Country may be found in its National Annex. The recommended value for global analysis is 1,3.

(3) In the verification of local effects $\gamma_{P,unfav}$ should also be used.

Note: The value of $\gamma_{P,unfav}$ for local effects for use in a Country may be found in its National Annex. The recommended value is 1,2. The local effects of the anchorage of pre-tensioned tendons are considered in 8.10.2.

2.4.2.3 Partial factor for fatigue loads

(1) The partial factor for fatigue loads is $\gamma_{F,fat}$.

Note: The value of $\gamma_{F,fat}$ for use in a Country may be found in its National Annex. The recommended value is 1,0.

2.4.2.4 Partial factors for materials

(1) Partial factors for materials for ultimate limit states, γ_C and γ_S should be used.

Note: The values of γ_C and γ_S for use in a Country may be found in its National Annex. The recommended values for 'persistent & transient' and 'accidental, design situations are given in Table 2.1N. These are not valid for fire design for which reference should be made to EN 1992-1-2.

For fatigue verification the partial factors for persistent design situations given in Table 2.1N are recommended for the values of $\gamma_{C,fat}$ and $\gamma_{S,fat}$.

Table 2.1N: Partial factors for materials for ultimate limit states

Design situations	γ_C for concrete	γ_S for reinforcing steel	γ_S for prestressing steel
Persistent & Transient	1,5	1,15	1,15
Accidental	1,2	1,0	1,0

(2) The values for partial factors for materials for serviceability limit state verification should be taken as those given in the particular clauses of this Eurocode.

Note: The values of γ_C and γ_S in the serviceability limit state for use in a Country may be found in its National Annex. The recommended value for situations not covered by particular clauses of this Eurocode is 1,0.

(3) Lower values of γ_C and γ_S may be used if justified by measures reducing the uncertainty in the calculated resistance.

Note: Information is given in Informative Annex A.

2.4.2.5 Partial factors for materials for foundations

(1) Design values of strength properties of the ground should be calculated in accordance with EN 1997.

(2) The partial factor for concrete γ_C given in 2.4.2.4 (1) should be multiplied by a factor, k_f, for calculation of design resistance of cast in place piles without permanent casing.

Note: The value of k_f for use in a Country may be found in its National Annex. The recommended value is 1,1.

Licensed copy:University of Wales Trinity Saint David, 12/03/2020, Uncontrolled Copy, © BSI

2.4.3 Combinations of actions

(1) The general formats for combinations of actions for the ultimate and serviceability limit states are given in EN 1990, Section 6.

Note 1: Detailed expressions for combinations of actions are given in the normative annexes of EN 1990, i.e. Annex A1 for buildings, A2 for bridges, etc. with relevant recommended values for partial factors and representative values of actions given in the notes.

Note 2: Combination of actions for fatigue verification is given in 6.8.3.

(2) For each permanent action either the lower or the upper design value (whichever gives the more unfavourable effect) should be applied throughout the structure (e.g. self-weight in a structure).

Note: There may be some exceptions to this rule (e.g. in the verification of static equilibrium, see EN 1990 Section 6). In such cases a different set of partial factors (Set A) may be used. An example valid for buildings is given in Annex A1 of EN 1990.

2.4.4 Verification of static equilibrium - EQU

(1) The reliability format for the verification of static equilibrium also applies to design situations of EQU, such as holding down devices or the verification of the uplift of bearings for continuous beams.

Note: Information is given in Annex A of EN 1990.

2.5 Design assisted by testing

(1) The design of structures or structural elements may be assisted by testing.

Note: Information is given in Section 5 and Annex D of EN 1990.

2.6 Supplementary requirements for foundations

(1)P Where ground-structure interaction has significant influence on the action effects in the structure, the properties of the soil and the effects of the interaction shall be taken into account in accordance with EN 1997-1.

(2) Where significant differential settlements are likely their influence on the action effects in the structure should be checked.

Note 1: Annex G may be used to model the soil -structure interaction.

Note 2: Simple methods ignoring the effects of ground deformation are normally appropriate for the majority of structural designs.

(3) Concrete foundations should be sized in accordance with EN 1997-1.

(4) Where relevant, the design should include the effects of phenomena such as subsidence, heave, freezing, thawing, erosion, etc.

2.7 Requirements for fastenings

(1) The local and structural effects of fasteners should be considered.

Note: The requirements for the design of fastenings are given in the Technical Specification 'Design of Fastenings for Use in Concrete' (under development). This Technical Specification will cover the design of the following types of fasteners:
cast-in fasteners such as:
- headed anchors,
- channel bars,

and post-installed fasteners such as:
- expansion anchors,
- undercut anchors,
- concrete screws,
- bonded anchors,
- bonded expansion anchors and
- bonded undercut anchors.

The performance of fasteners should comply with the requirements of a CEN Standard or should be demonstrated by a European Technical Approval.

The Technical Specification 'Design of Fastenings' for Use in Concrete' includes the local transmission of loads into the structure.

In the design of the structure the loads and additional design requirements given in Annex A of that Technical Specification should be taken into account.

Licensed copy:University of Wales Trinity Saint David, 12/03/2020, Uncontrolled Copy, © BSI

Licensed copy:University of Wales Trinity Saint David, 12/03/2020, Uncontrolled Copy, © BSI

SECTION 3 MATERIALS

3.1 Concrete

3.1.1 General

(1)P The following clauses give principles and rules for normal and high strength concrete.

(2) Rules for lightweight aggregate concrete are given in Section 11.

3.1.2 Strength

(1)P The compressive strength of concrete is denoted by concrete strength classes which relate to the characteristic (5%) cylinder strength f_{ck}, or the cube strength $f_{ck,cube}$, in accordance with EN 206-1.

(2)P The strength classes in this code are based on the characteristic cylinder strength f_{ck} determined at 28 days with a maximum value of C_{max}.

Note: The value of C_{max} for use in a Country may be found in its National Annex. The recommended value is C90/105.

(3) The characteristic strengths for f_{ck} and the corresponding mechanical characteristics necessary for design, are given in Table 3.1.

(4) In certain situations (e.g. prestressing) it may be appropriate to assess the compressive strength for concrete before or after 28 days, on the basis of test specimens stored under other conditions than prescribed in EN 12390.

If the concrete strength is determined at an age t > 28 days the values α_{cc} and α_{ct} defined in 3.1.6 (1)P and 3.1.6 (2)P should be reduced by a factor k_t.

Note: The value of k_t for use in a Country may be found in its National Annex. The recommended value is 0,85.

(5) It may be required to specify the concrete compressive strength, $f_{ck}(t)$, at time t for a number of stages (e.g. demoulding, transfer of prestress), where

$f_{ck}(t) = f_{cm}(t) - 8$ (MPa) for $3 < t < 28$ days.
$f_{ck}(t) = f_{ck}$ for $t \geq 28$ days

More precise values should be based on tests especially for $t \leq 3$ days

(6) The compressive strength of concrete at an age t depends on the type of cement, temperature and curing conditions. For a mean temperature of 20°C and curing in accordance with EN 12390 the compressive strength of concrete at various ages $f_{cm}(t)$ may be estimated from Expressions (3.1) and (3.2).

$$f_{cm}(t) = \beta_{cc}(t)\, f_{cm} \tag{3.1}$$

with

$$\beta_{cc}(t) = \exp\left\{ s\left[1 - \left(\frac{28}{t} \right)^{1/2} \right] \right\} \tag{3.2}$$

where:

$f_{cm}(t)$ is the mean concrete compressive strength at an age of t days

Licensed copy:University of Wales Trinity Saint David, 12/03/2020, Uncontrolled Copy, © BSI

f_{cm} is the mean compressive strength at 28 days according to Table 3.1
$\beta_{cc}(t)$ is a coefficient which depends on the age of the concrete t
t is the age of the concrete in days
s is a coefficient which depends on the type of cement:
= 0,20 for cement of strength Classes CEM 42,5 R, CEM 52,5 N and CEM 52,5 R (Class R)
= 0,25 for cement of strength Classes CEM 32,5 R, CEM 42,5 N (Class N)
= 0,38 for cement of strength Classes CEM 32,5 N (Class S)

Note: exp{ } has the same meaning as $e^{(\ )}$

Where the concrete does not conform with the specification for compressive strength at 28 days the use of Expressions (3.1) and (3.2) is not appropriate.

This clause should not be used retrospectively to justify a non conforming reference strength by a later increase of the strength.

For situations where heat curing is applied to the member see 10.3.1.1 (3).

(7)P The tensile strength refers to the highest stress reached under concentric tensile loading. For the flexural tensile strength reference should be made to 3.1.8 (1).

(8) Where the tensile strength is determined as the splitting tensile strength, $f_{ct,sp}$, an approximate value of the axial tensile strength, f_{ct}, may be taken as:

$$f_{ct} = 0{,}9 f_{ct,sp} \tag{3.3}$$

(9) The development of tensile strength with time is strongly influenced by curing and drying conditions as well as by the dimensions of the structural members. As a first approximation it may be assumed that the tensile strength $f_{ctm}(t)$ is equal to:

$$f_{ctm}(t) = (\beta_{cc}(t))^{\alpha} \cdot f_{ctm} \tag{3.4}$$

where $\beta_{cc}(t)$ follows from Expression (3.2) and
$\alpha = 1$ for $t < 28$
$\alpha = 2/3$ for $t \geq 28$. The values for f_{ctm} are given in Table 3.1.

Note: Where the development of the tensile strength with time is important it is recommended that tests are carried out taking into account the exposure conditions and the dimensions of the structural member.

3.1.3 Elastic deformation

(1) The elastic deformations of concrete largely depend on its composition (especially the aggregates). The values given in this Standard should be regarded as indicative for general applications. However, they should be specifically assessed if the structure is likely to be sensitive to deviations from these general values.

(2) The modulus of elasticity of a concrete is controlled by the moduli of elasticity of its components. Approximate values for the modulus of elasticity E_{cm}, secant value between $\sigma_c = 0$ and $0{,}4 f_{cm}$, for concretes with quartzite aggregates, are given in Table 3.1. For limestone and sandstone aggregates the value should be reduced by 10% and 30% respectively. For basalt aggregates the value should be increased by 20%.

Note: A Country's National Annex may refer to non-contradictory complementary information.

Licensed copy:University of Wales Trinity Saint David, 12/03/2020, Uncontrolled Copy, © BSI

Table 3.1 Strength and deformation characteristics for concrete

	Strength classes for concrete														Analytical relation / Explanation
f_{ck} (MPa)	12	16	20	25	30	35	40	45	50	55	60	70	80	90	
$f_{ck,cube}$ (MPa)	15	20	25	30	37	45	50	55	60	67	75	85	95	105	2.8
f_{cm} (MPa)	20	24	28	33	38	43	48	53	58	63	68	78	88	98	$f_{cm} = f_{ck}+8$(MPa)
f_{ctm} (MPa)	1,6	1,9	2,2	2,6	2,9	3,2	3,5	3,8	4,1	4,2	4,4	4,6	4,8	5,0	$f_{ctm}=0,30\times f_{ck}^{(2/3)} \leq$ C50/60 $f_{ctm}=2,12\cdot \ln(1+(f_{cm}/10))$ > C50/60
$f_{ctk,0,05}$ (MPa)	1,1	1,3	1,5	1,8	2,0	2,2	2,5	2,7	2,9	3,0	3,1	3,2	3,4	3,5	$f_{ctk;0,05} = 0,7\times f_{ctm}$ 5% fractile
$f_{ctk,0,95}$ (MPa)	2,0	2,5	2,9	3,3	3,8	4,2	4,6	4,9	5,3	5,5	5,7	6,0	6,3	6,6	$f_{ctk;0,95} = 1,3\times f_{ctm}$ 95% fractile
E_{cm} (GPa)	27	29	30	31	33	34	35	36	37	38	39	41	42	44	$E_{cm} = 22[(f_{cm})/10]^{0,3}$ (f_{cm} in MPa)
ε_{c1} (‰)	1,8	1,9	2,0	2,1	2,2	2,25	2,3	2,4	2,45	2,5	2,6	2,7	2,8	2,8	see Figure 3.2 AC2 ε_{c1} ($^0/_{00}$) = 0,7 $f_{cm}^{0,31} \leq 2,8$ AC2
ε_{cu1} (‰)	3,5									3,2	3,0	2,8	2,8	2,8	see Figure 3.2 for $f_{ck} \geq 50$ Mpa $\varepsilon_{cu1}(^0/_{00})=2,8+27[(98-f_{cm})/100]^4$
ε_{c2} (‰)	2,0									2,2	2,3	2,4	2, 5	2,6	see Figure 3.3 for $f_{ck} \geq 50$ Mpa $\varepsilon_{c2}(^0/_{00})=2,0+0,085(f_{ck}-50)^{0,53}$
ε_{cu2} (‰)	3,5									3,1	2,9	2,7	2,6	2,6	see Figure 3.3 for $f_{ck} \geq 50$ Mpa $\varepsilon_{cu2}(^0/_{00})=2,6+35[(90-f_{ck})/100]^4$
n	2,0									1,75	1,6	1,45	1,4	1,4	for $f_{ck} \geq 50$ Mpa $n=1,4+23,4[(90- f_{ck})/100]^4$
ε_{c3} (‰)	1,75									1,8	1,9	2,0	2,2	2,3	see Figure 3.4 for $f_{ck} \geq 50$ Mpa $\varepsilon_{c3}(^0/_{00})=1,75+0,55[(f_{ck}-50)/40]$
ε_{cu3} (‰)	3,5									3,1	2,9	2,7	2,6	2,6	see Figure 3.4 for $f_{ck} \geq 50$ Mpa $\varepsilon_{cu3}(^0/_{00})=2,6+35[(90-f_{ck})/100]^4$

Licensed copy:University of Wales Trinity Saint David, 12/03/2020, Uncontrolled Copy, © BSI

(3) Variation of the modulus of elasticity with time can be estimated by:

$$E_{cm}(t) = (f_{cm}(t) / f_{cm})^{0,3}\, E_{cm} \qquad (3.5)$$

where $E_{cm}(t)$ and $f_{cm}(t)$ are the values at an age of t days and E_{cm} and f_{cm} are the values determined at an age of 28 days. The relation between $f_{cm}(t)$ and f_{cm} follows from Expression (3.1).

(4) Poisson's ratio may be taken equal to 0,2 for uncracked concrete and 0 for cracked concrete.

(5) Unless more accurate information is available, the linear coefficient of thermal expansion may be taken equal to $10 \cdot 10^{-6}\ K^{-1}$.

3.1.4 Creep and shrinkage

(1)P Creep and shrinkage of the concrete depend on the ambient humidity, the dimensions of the element and the composition of the concrete. Creep is also influenced by the maturity of the concrete when the load is first applied and depends on the duration and magnitude of the loading.

(2) The creep coefficient, $\varphi(t,t_0)$ is related to E_c, the tangent modulus, which may be taken as 1,05 E_{cm}. Where great accuracy is not required, the value found from Figure 3.1 may be considered as the creep coefficient, provided that the concrete is not subjected to a compressive stress greater than 0,45 f_{ck} (t_0) at an age t_0, the age of concrete at the time of loading.

Note: For further information, including the development of creep with time, Annex B may be used.

(3) The creep deformation of concrete $\varepsilon_{cc}(\infty,t_0)$ at time $t = \infty$ for a constant compressive stress σ_c applied at the concrete age t_0, is given by:

$$\varepsilon_{cc}(\infty,t_0) = \varphi(\infty,t_0).\ (\sigma_c / E_c) \qquad (3.6)$$

(4) When the compressive stress of concrete at an age t_0 exceeds the value 0,45 $f_{ck}(t_0)$ then creep non-linearity should be considered. Such a high stress can occur as a result of pretensioning, e.g. in precast concrete members at tendon level. In such cases the non-linear notional creep coefficient should be obtained as follows:

[AC1] $$\varphi_{nl}(\infty,t_0) = \varphi(\infty, t_0) \exp(1{,}5\,(k_\sigma - 0{,}45)) \qquad (3.7)$$

where:

$\varphi_{nl}(\infty,t_0)$ is the non-linear notional creep coefficient, which replaces $\varphi(\infty, t_0)$

k_σ is the stress-strength ratio $\sigma_c/f_{ck}(t_0)$, where σ_c is the compressive stress and $f_{ck}(t_0)$ is the characteristic concrete compressive strength at the time of loading.[AC1]

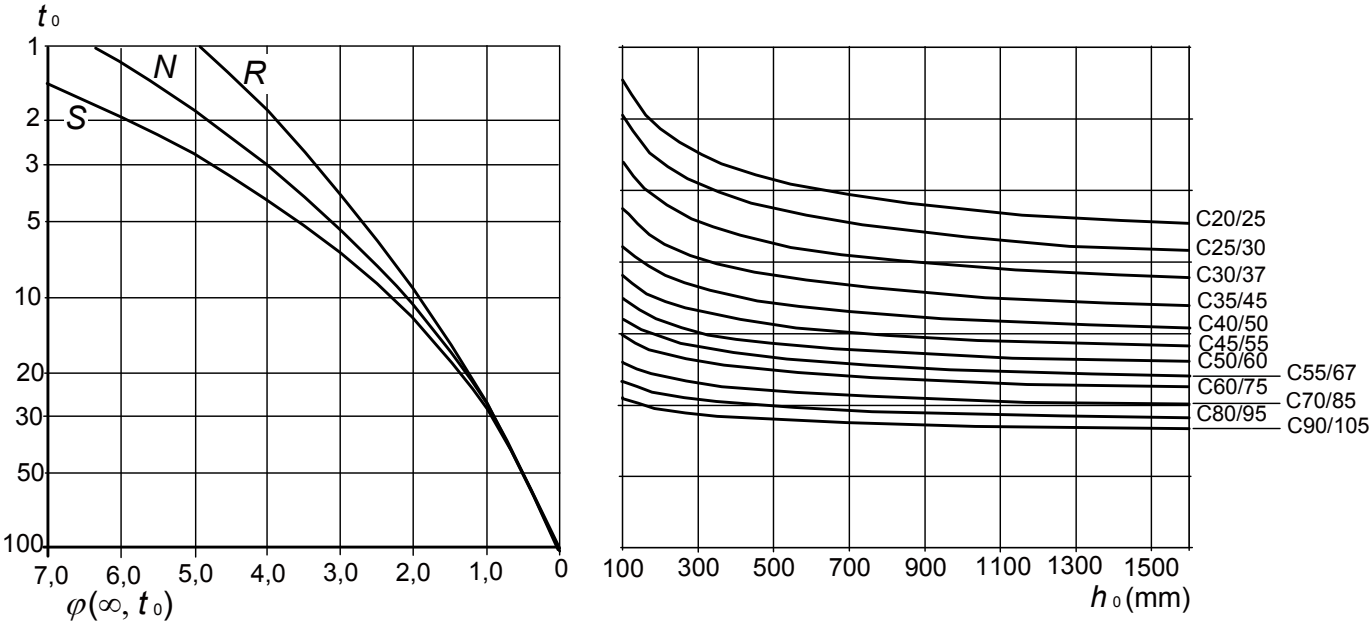

a) inside conditions - RH = 50%

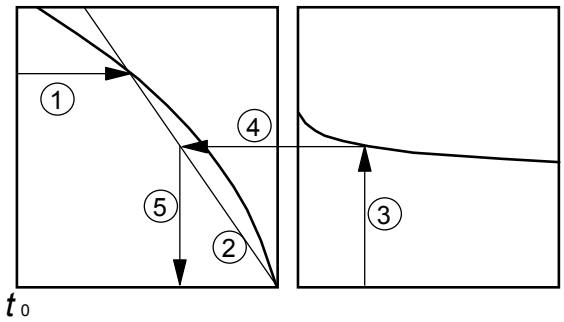

Note:
- intersection point between lines 4 and 5 can also be above point 1
- for t_0 > 100 it is sufficiently accurate to assume t_0 = 100 (and use the tangent line)

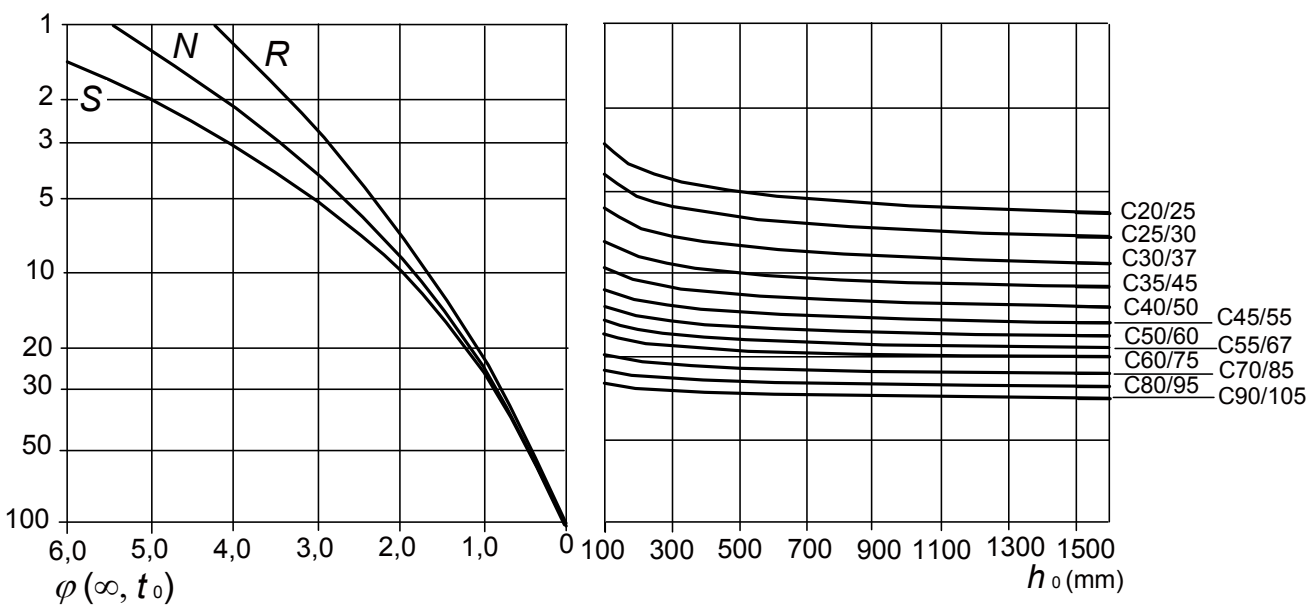

b) outside conditions - RH = 80%

Figure 3.1: Method for determining the creep coefficient $\varphi(\infty, t_0)$ for concrete under normal environmental conditions

Licensed copy:University of Wales Trinity Saint David, 12/03/2020, Uncontrolled Copy, © BSI

Licensed copy:University of Wales Trinity Saint David, 12/03/2020, Uncontrolled Copy, © BSI

(5) The values given in Figure 3.1 are valid for ambient temperatures between -40°C and +40°C and a mean relative humidity between RH = 40% and RH = 100%. The following symbols are used:

$\varphi(\infty, t_0)$ is the final creep coefficient
t_0 is the age of the concrete at time of loading in days
h_0 is the notional size = $2A_c/u$, where A_c is the concrete cross-sectional area and u is the perimeter of that part which is exposed to drying
S is Class S, according to 3.1.2 (6)
N is Class N, according to 3.1.2 (6)
R is Class R, according to 3.1.2 (6)

(6) The total shrinkage strain is composed of two components, the drying shrinkage strain and the autogenous shrinkage strain. The drying shrinkage strain develops slowly, since it is a function of the migration of the water through the hardened concrete. The autogenous shrinkage strain develops during hardening of the concrete: the major part therefore develops in the early days after casting. Autogenous shrinkage is a linear function of the concrete strength. It should be considered specifically when new concrete is cast against hardened concrete. Hence the values of the total shrinkage strain ε_{cs} follow from

$$\varepsilon_{cs} = \varepsilon_{cd} + \varepsilon_{ca} \tag{3.8}$$

where:

ε_{cs} is the total shrinkage strain
ε_{cd} is the drying shrinkage strain
ε_{ca} is the autogenous shrinkage strain

The final value of the drying shrinkage strain, $\varepsilon_{cd,\infty}$ is equal to $k_h \cdot \varepsilon_{cd,0}$. $\varepsilon_{cd,0}$ may be taken from Table 3.2 (expected mean values, with a coefficient of variation of about 30%).

Note: The formula for $\varepsilon_{cd,0}$ is given in Annex B.

Table 3.2 Nominal unrestrained drying shrinkage values $\varepsilon_{cd,0}$ (in $^0/_{00}$) for concrete with cement CEM Class N

$f_{ck}/f_{ck,cube}$ (MPa)	Relative Humidity (in $^0/_0$)					
	20	**40**	**60**	**80**	**90**	**100**
20/25	0.62	0.58	0.49	0.30	0.17	0.00
40/50	0.48	0.46	0.38	0.24	0.13	0.00
60/75	0.38	0.36	0.30	0.19	0.10	0.00
80/95	0.30	0.28	0.24	0.15	0.08	0.00
90/105	0.27	0.25	0.21	0.13	0.07	0.00

The development of the drying shrinkage strain in time follows from:

$$\varepsilon_{cd}(t) = \beta_{ds}(t, t_s) \cdot k_h \cdot \varepsilon_{cd,0} \tag{3.9}$$

where

k_h is a coefficient depending on the notional size h_0 according to Table 3.3

Licensed copy:University of Wales Trinity Saint David, 12/03/2020, Uncontrolled Copy, © BSI

Table 3.3 Values for k_h in Expression (3.9)

h_0	k_h
100	1.0
200	0.85
300	0.75
≥ 500	0.70

$$\beta_{ds}(t,t_s) = \frac{(t-t_s)}{(t-t_s)+0{,}04\sqrt{h_0^3}} \tag{3.10}$$

where:

t is the age of the concrete at the moment considered, in days

t_s is the age of the concrete (days) at the beginning of drying shrinkage (or swelling). Normally this is at the end of curing.

h_0 is the notional size (mm) of the cross-section
$= 2A_c/u$

where:

A_c is the concrete cross-sectional area

u is the perimeter of that part of the cross section which is exposed to drying

The autogenous shrinkage strain follows from:

$$\varepsilon_{ca}(t) = \beta_{as}(t)\,\varepsilon_{ca}(\infty) \tag{3.11}$$

where:

$$\varepsilon_{ca}(\infty) = 2{,}5\,(f_{ck} - 10)\,10^{-6} \tag{3.12}$$

and

$$\beta_{as}(t) = 1 - \exp(-0{,}2t^{0{,}5}) \tag{3.13}$$

where t is given in days.

3.1.5 Stress-strain relation for non-linear structural analysis

(1) The relation between σ_c and ε_c shown in Figure 3.2 (compressive stress and shortening strain shown as absolute values) for short term uniaxial loading is described by the Expression (3.14):

$$\frac{\sigma_c}{f_{cm}} = \frac{k\eta - \eta^2}{1+(k-2)\eta} \tag{3.14}$$

where:

$\eta = \varepsilon_c/\varepsilon_{c1}$

ε_{c1} is the strain at peak stress according to Table 3.1

$k = 1{,}05\,E_{cm} \times |\varepsilon_{c1}|/f_{cm}$ (f_{cm} according to Table 3.1)

Expression (3.14) is valid for $0 < |\varepsilon_c| < |\varepsilon_{cu1}|$ where ε_{cu1} is the nominal ultimate strain.

(2) Other idealised stress-strain relations may be applied, if they adequately represent the behaviour of the concrete considered.

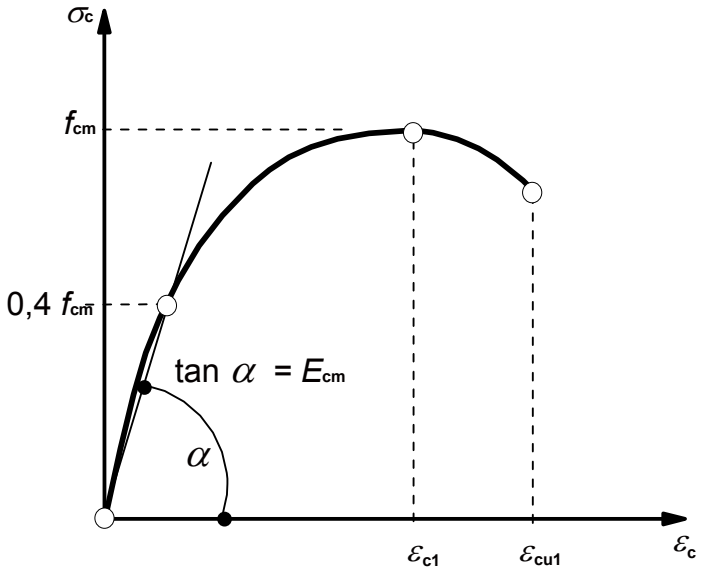

Figure 3.2: Schematic representation of the stress-strain relation for structural analysis (the use 0,4f_{cm} for the definition of E_{cm} is approximate).

3.1.6 Design compressive and tensile strengths

(1)P The value of the design compressive strength is defined as

$$f_{cd} = \alpha_{cc}\, f_{ck} / \gamma_C \qquad (3.15)$$

where:

γ_C is the partial safety factor for concrete, see 2.4.2.4, and

α_{cc} is the coefficient taking account of long term effects on the compressive strength and of unfavourable effects resulting from the way the load is applied.

Note: The value of α_{cc} for use in a Country should lie between 0,8 and 1,0 and may be found in its National Annex. The recommended value is 1.

(2)P The value of the design tensile strength, f_{ctd}, is defined as

$$f_{ctd} = \alpha_{ct}\, f_{ctk,0,05} / \gamma_C \qquad (3.16)$$

where:

γ_C is the partial safety factor for concrete, see 2.4.2.4, and

α_{ct} is a coefficient taking account of long term effects on the tensile strength and of unfavourable effects, resulting from the way the load is applied.

Note: The value of α_{ct} for use in a Country may be found in its National Annex. The recommended value is 1,0.

3.1.7 Stress-strain relations for the design of cross-sections

(1) For the design of cross-sections, the following stress-strain relationship may be used, see Figure 3.3 (compressive strain shown positive):

Licensed copy:University of Wales Trinity Saint David, 12/03/2020, Uncontrolled Copy, © BSI

$$\sigma_c = f_{cd}\left[1-\left(1-\frac{\varepsilon_c}{\varepsilon_{c2}}\right)^n\right] \quad \text{for} \quad 0 \le \varepsilon_c \le \varepsilon_{c2} \tag{3.17}$$

$$\sigma_c = f_{cd} \quad \textit{for} \quad \varepsilon_{c2} \le \varepsilon_c \le \varepsilon_{cu2} \tag{3.18}$$

where:

n is the exponent according to Table 3.1

ε_{c2} is the strain at reaching the maximum strength according to Table 3.1

ε_{cu2} is the ultimate strain according to Table 3.1

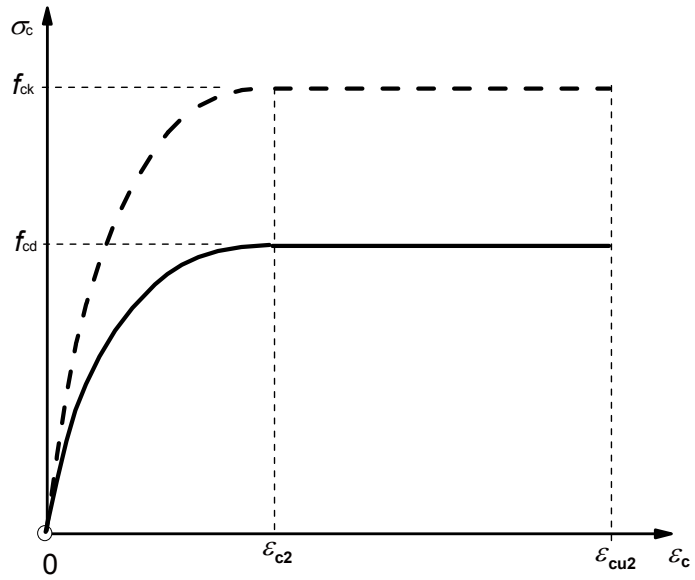

Figure 3.3: Parabola-rectangle diagram for concrete under compression.

(2) Other simplified stress-strain relationships may be used if equivalent to or more conservative than the one defined in (1), for instance bi-linear according to Figure 3.4 (compressive stress and shortening strain shown as absolute values) with values of ε_{c3} and ε_{cu3} according to Table 3.1.

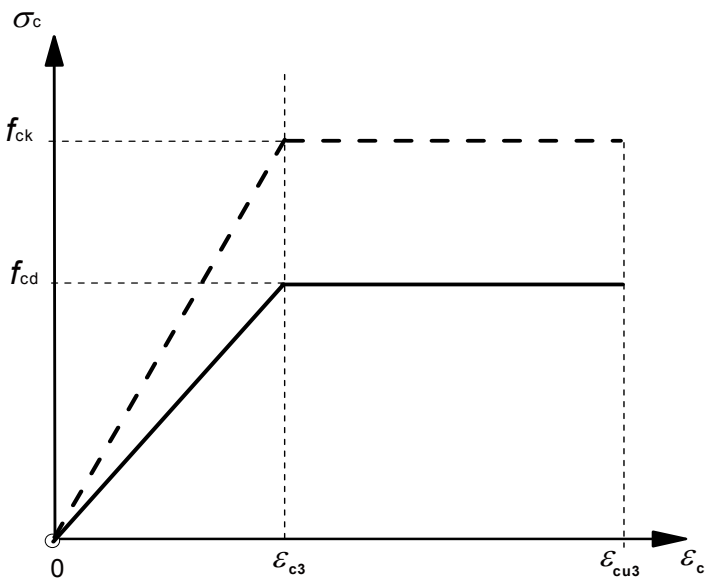

Figure 3.4: Bi-linear stress-strain relation.

(3) A rectangular stress distribution (as given in Figure 3.5) may be assumed. The factor λ,

Licensed copy:University of Wales Trinity Saint David, 12/03/2020, Uncontrolled Copy, © BSI

Licensed copy:University of Wales Trinity Saint David, 12/03/2020, Uncontrolled Copy, © BSI

defining the effective height of the compression zone and the factor η, defining the effective strength, follow from:

$\lambda = 0{,}8$ for $f_{ck} \leq 50$ MPa (3.19)

$\lambda = 0{,}8 - (f_{ck} - 50)/400$ for $50 < f_{ck} \leq 90$ MPa (3.20)

and

$\eta = 1{,}0$ for $f_{ck} \leq 50$ MPa (3.21)

$\eta = 1{,}0 - (f_{ck} - 50)/200$ for $50 < f_{ck} \leq 90$ MPa (3.22)

Note: If the width of the compression zone decreases in the direction of the extreme compression fibre, the value ηf_{cd} should be reduced by 10%.

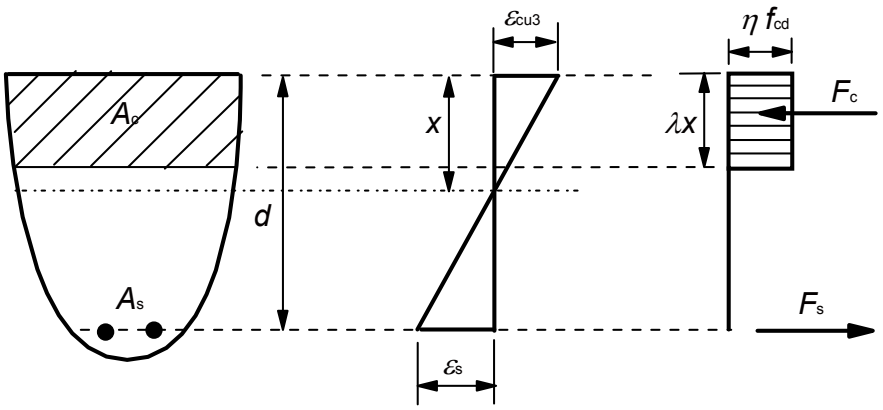

Figure 3.5: Rectangular stress distribution

3.1.8 Flexural tensile strength

(1) The mean flexural tensile strength of reinforced concrete members depends on the mean axial tensile strength and the depth of the cross-section. The following relationship may be used:

$$f_{ctm,fl} = \max\{(1{,}6 - h/1000) f_{ctm};\ f_{ctm}\} \quad (3.23)$$

where:

h is the total member depth in mm

f_{ctm} is the mean axial tensile strength following from Table 3.1.

The relation given in Expression (3.23) also applies for the characteristic tensile strength values.

3.1.9 Confined concrete

(1) Confinement of concrete results in a modification of the effective stress-strain relationship: higher strength and higher critical strains are achieved. The other basic material characteristics may be considered as unaffected for design.

(2) In the absence of more precise data, the stress-strain relation shown in Figure 3.6 (compressive strain shown positive) may be used, with increased characteristic strength and strains according to:

$$f_{ck,c} = f_{ck}\,(1{,}000 + 5{,}0\ \sigma_2/f_{ck}) \quad \text{for } \sigma_2 \leq 0{,}05 f_{ck} \quad (3.24)$$

$$f_{ck,c} = f_{ck}\,(1{,}125 + 2{,}50\ \sigma_2/f_{ck}) \quad \text{for } \sigma_2 > 0{,}05 f_{ck} \tag{3.25}$$

$$\varepsilon_{c2,c} = \varepsilon_{c2}\,(f_{ck,c}/f_{ck})^2 \tag{3.26}$$

$$\varepsilon_{cu2,c} = \varepsilon_{cu2} + 0{,}2\ \sigma_2/f_{ck} \tag{3.27}$$

where σ_2 (= σ_3) is the effective lateral compressive stress at the ULS due to confinement and ε_{c2} and ε_{cu2} follow from Table 3.1. Confinement can be generated by adequately closed links or cross-ties, which can reach the plastic condition due to lateral extension of the concrete.

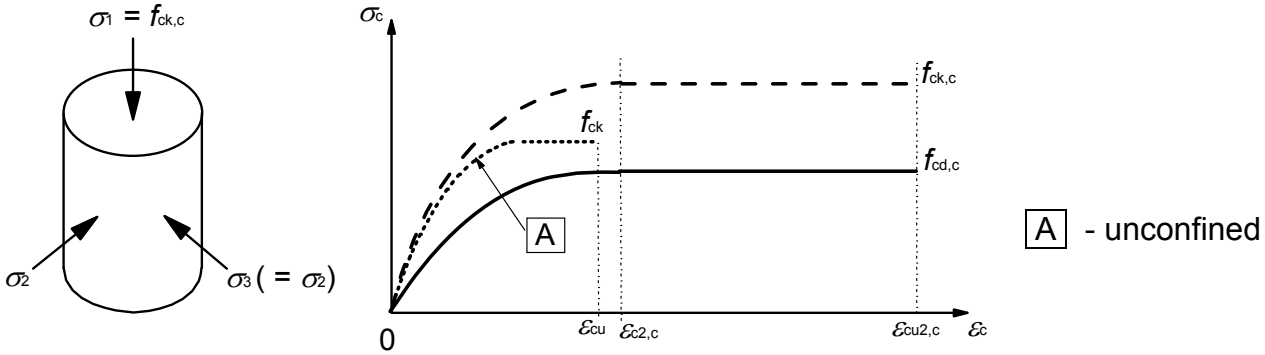

Figure 3.6: Stress-strain relationship for confined concrete

3.2 Reinforcing steel

3.2.1 General

(1)P The following clauses give principles and rules for reinforcement which is in the form of bars, de-coiled rods, welded fabric and lattice girders. They do not apply to specially coated bars.

(2)P The requirements for the properties of the reinforcement are for the material as placed in the hardened concrete. If site operations can affect the properties of the reinforcement, then those properties shall be verified after such operations.

(3)P Where other steels are used, which are not in accordance with EN10080, the properties shall be verified to be in accordance with 3.2.2 to 3.2.6 and Annex C.

(4)P The required properties of reinforcing steels shall be verified using the testing procedures in accordance with EN 10080.

Note: EN 10080 refers to a yield strength R_e, which relates to the characteristic, minimum and maximum values based on the long-term quality level of production. In contrast f_{yk} is the characteristic yield stress based on only that reinforcement used in a particular structure. There is no direct relationship between f_{yk} and the characteristic R_e. However the methods of evaluation and verification of yield strength given in EN 10080 provide a sufficient check for obtaining f_{yk}.

(5) The application rules relating to lattice girders (see EN 10080 for definition) apply only to those made with ribbed bars. Lattice girders made with other types of reinforcement may be given in an appropriate European Technical Approval.

3.2.2 Properties

(1)P The behaviour of reinforcing steel is specified by the following properties:

Licensed copy:University of Wales Trinity Saint David, 12/03/2020, Uncontrolled Copy, © BSI

Licensed copy:University of Wales Trinity Saint David, 12/03/2020, Uncontrolled Copy, © BSI

- yield strength (f_{yk} or $f_{0,2k}$)
- maximum actual yield strength ($f_{y,max}$)
- tensile strength (f_t)
- ductility (ε_{uk} and f_t/f_{yk})
- bendability
- bond characteristics (f_R: See Annex C)
- section sizes and tolerances
- fatigue strength
- weldability
- shear and weld strength for welded fabric and lattice girders

(2)P This Eurocode applies to ribbed and weldable reinforcement, including fabric. The permitted welding methods are given in Table 3.4.

Note 1: The properties of reinforcement required for use with this Eurocode are given in Annex C.

Note 2: The properties and rules for the use of indented bars with precast concrete products may be found in the relevant product standard.

(3)P The application rules for design and detailing in this Eurocode are valid for a specified yield strength range, f_{yk} = 400 to 600 MPa.

Note: The upper limit of f_{yk} within this range for use within a Country may be found in its National Annex.

(4)P The surface characteristics of ribbed bars shall be such to ensure adequate bond with the concrete.

(5) Adequate bond may be assumed by compliance with the specification of projected rib area, f_R.

Note: Minimum values of the relative rib area, f_R, are given in the Annex C.

(6)P The reinforcement shall have adequate bendability to allow the use of the minimum mandrel diameters specified in Table 8.1 and to allow rebending to be carried out.

Note: For bend and rebend requirements see Annex C.

3.2.3 Strength

(1)P The yield strength f_{yk} (or the 0,2% proof stress, $f_{0,2k}$) and the tensile strength f_{tk} are defined respectively as the characteristic value of the yield load, and the characteristic maximum load in direct axial tension, each divided by the nominal cross sectional area.

3.2.4 Ductility characteristics

(1)P The reinforcement shall have adequate ductility as defined by the ratio of tensile strength to the yield stress, $(f_t/f_y)_k$ and the elongation at maximum force, ε_{uk} .

(2) Figure 3.7 shows stress-strain curves for typical hot rolled and cold worked steel.

[AC1⟩ **Note:** Values of $k = (f_t/f_y)_k$ and ε_{uk} for Class A, B and C are given in Annex C. ⟨AC1]

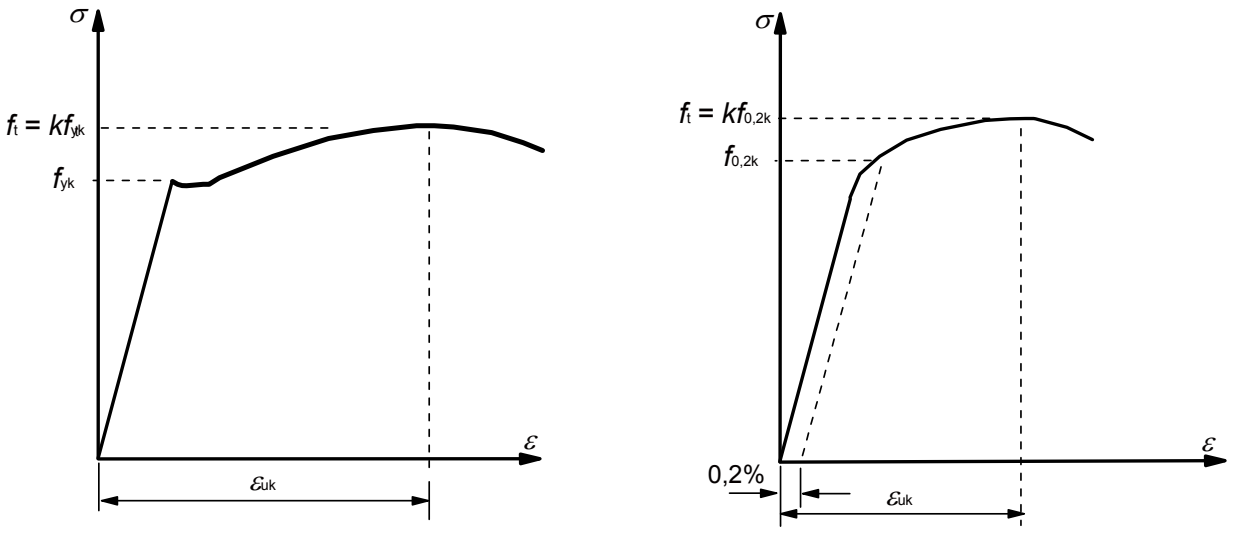

a) Hot rolled steel **b) Cold worked steel**

Figure 3.7: Stress-strain diagrams of typical reinforcing steel (absolute values are shown for tensile stress and strain)

3.2.5 Welding

(1)P Welding processes for reinforcing bars shall be in accordance with Table 3.4 and the weldability shall be in accordance with EN10080.

Table 3.4: Permitted welding processes and examples of application

Loading case	Welding method	Bars in tension[1]	Bars in compression[1]
Predominantly static (see 6.8.1 (2))	flash-welding	butt joint	
	manual metal arc welding and metal arc welding with filling electrode	butt joint with $\phi \geq 20$ mm, splice, lap, cruciform joints[3], joint with other steel members	
	AC2 metal arc active welding AC2	splice, lap, cruciform[3] joints & joint with other steel members	
		-	butt joint with $\phi \geq 20$ mm
	friction welding	butt joint, joint with other steels	
	resistance spot welding	lap joint[4] cruciform joint[2, 4]	
Not predominantly static (see 6.8.1 (2))	flash-welding	butt joint	
	AC2 manual metal arc welding AC2	-	butt joint with $\phi \geq 14$mm
	metal arc active welding	-	butt joint with $\phi \geq 14$mm
	resistance spot welding	lap joint[4] cruciform joint[2, 4]	

Notes:

1. Only bars with approximately the same nominal diameter may be welded together.
2. Permitted ratio of mixed diameter bars ≥ 0,57
3. For bearing joints $\phi \leq 16$ mm
4. For bearing joints $\phi \leq 28$ mm

AC1 (2)P All welding of reinforcing bars shall be carried out in accordance with EN ISO 17660. AC1

Licensed copy:University of Wales Trinity Saint David, 12/03/2020, Uncontrolled Copy, © BSI

Licensed copy:University of Wales Trinity Saint David, 12/03/2020, Uncontrolled Copy, © BSI

(3)P The strength of the welded joints along the anchorage length of welded fabric shall be sufficient to resist the design forces.

(4) The strength of the welded joints of welded fabric may be assumed to be adequate if each welded joint can withstand a shearing force not less than 25% of a force equivalent to the specified characteristic yield stress times the nominal cross sectional area. This force should be based on the area of the thicker wire if the two are different.

3.2.6 Fatigue

(1)P Where fatigue strength is required it shall be verified in accordance with EN 10080.

Note : Information is given in Annex C.

3.2.7 Design assumptions

(1) Design should be based on the nominal cross-section area of the reinforcement and the design values derived from the characteristic values given in 3.2.2.

(2) For normal design, either of the following assumptions may be made (see Figure 3.8):

[AC1] a) an inclined top branch with a strain limit of ε_{ud} and a maximum stress of kf_{yk}/γ_S at ε_{uk}, [AC1] where $k = (f_t/f_y)_k$,

b) a horizontal top branch without the need to check the strain limit.

Note 1: The value of ε_{ud} for use in a Country may be found in its National Annex. The recommended value is $0{,}9\varepsilon_{uk}$

Note 2: The value of $(f_t/f_y)_k$ is given in Annex C.

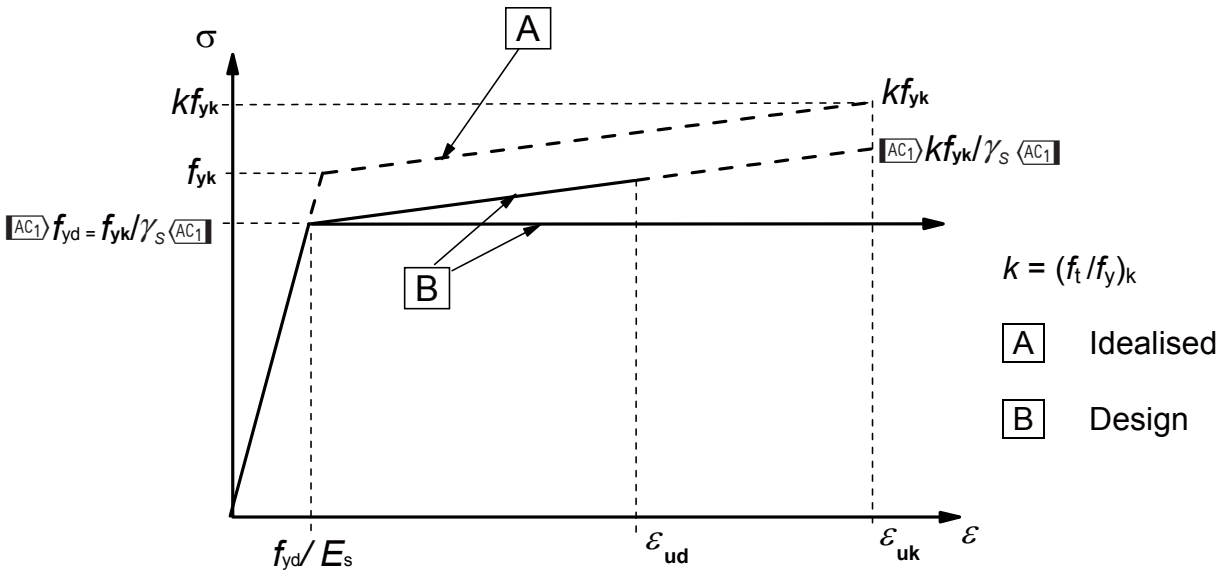

Figure 3.8: Idealised and design stress-strain diagrams for reinforcing steel (for tension and compression)

(3) The mean value of density may be assumed to be 7850 kg/m^3.

(4) The design value of the modulus of elasticity, E_s may be assumed to be 200 GPa.

3.3 Prestressing steel

3.3.1 General

(1)P This clause applies to wires, bars and strands used as prestressing tendons in concrete structures.

(2)P Prestressing tendons shall have an acceptably low level of susceptibility to stress corrosion.

(3) The level of susceptibility to stress corrosion may be assumed to be acceptably low if the prestressing tendons comply with the criteria specified in EN 10138 or given in an appropriate European Technical Approval.

(4) The requirements for the properties of the prestressing tendons are for the materials as placed in their final position in the structure. Where the methods of production, testing and attestation of conformity for prestressing tendons are in accordance with EN 10138 or given in an appropriate European Technical Approval it may be assumed that the requirements of this Eurocode are met.

(5)P For steels complying with this Eurocode, tensile strength, 0,1% proof stress, and elongation at maximum load are specified in terms of characteristic values; these values are designated respectively f_{pk}, $f_{p0,1k}$ and ε_{uk}.

Note: EN 10138 refers to the characteristic, minimum and maximum values based on the long-term quality level of production. In contrast $f_{p0,1k}$ and f_{pk} are the characteristic proof stress and tensile strength based on only that prestressing steel required for the structure. There is no direct relationship between the two sets of values. However the characteristic values for 0,1% proof force, $F_{p0,1k}$ divided by the cross-section area, S_n given in EN 10138 together with the methods for evaluation and verification provide a sufficient check for obtaining the value of $f_{p0,1k}$.

(6) Where other steels are used, which are not in accordance with EN 10138, the properties may be given in an appropriate European Technical Approval.

(7)P Each product shall be clearly identifiable with respect to the classification system in 3.3.2 (2)P.

(8)P The prestressing tendons shall be classified for relaxation purposes according to 3.3.2 (4)P or given in an appropriate European Technical Approval.

(9)P Each consignment shall be accompanied by a certificate containing all the information necessary for its identification with regard to (i) - (iv) in 3.3.2 (2)P and additional information where necessary.

(10)P There shall be no welds in wires and bars. Individual wires of strands may contain staggered welds made only before cold drawing.

(11)P For coiled prestressing tendons, after uncoiling a length of wire or strand the maximum bow height shall comply with EN 10138 unless given in an appropriate European Technical Approval.

Licensed copy:University of Wales Trinity Saint David, 12/03/2020, Uncontrolled Copy, © BSI

Licensed copy:University of Wales Trinity Saint David, 12/03/2020, Uncontrolled Copy, © BSI

3.3.2 Properties

(1)P The properties of prestressing steel are given in EN 10138, Parts 2 to 4 or European Technical Approval.

(2)P The prestressing tendons (wires, strands and bars) shall be classified according to:

(i) Strength, denoting the value of the 0,1% proof stress ($f_{p0,1k}$) and the value of the ratio of tensile [A1] strength to proof strength (f_p / $f_{p0,1}$)$_k$ [A1] and elongation at maximum load (ε_{uk})
(ii) Class, indicating the relaxation behaviour
(iii) Size
(iv) Surface characteristics.

(3)P The actual mass of the prestressing tendons shall not differ from the nominal mass by more than the limits specified in EN 10138 or given in an appropriate European Technical Approval.

(4)P In this Eurocode, three classes of relaxation are defined:

- Class 1: wire or strand - ordinary relaxation
- Class 2: wire or strand - low relaxation
- Class 3: hot rolled and processed bars

Note: Class 1 is not covered by EN 10138.

(5) The design calculations for the losses due to relaxation of the prestressing steel should be based on the value of ρ_{1000}, the relaxation loss (in %) at 1000 hours after tensioning and at a mean temperature of 20 °C (see EN 10138 for the definition of the isothermal relaxation test).

Note: The value of ρ_{1000} is expressed as a percentage ratio of the initial stress and is obtained for an initial stress equal to 0,7f_p, where f_p is the actual tensile strength of the prestressing steel samples. For design calculations, the characteristic tensile strength (f_{pk}) is used and this has been taken into account in the following expressions.

(6) The values for ρ_{1000} can be either assumed equal to 8% for Class 1, 2,5% for Class 2, and 4% for Class 3, or taken from the certificate.

(7) The relaxation loss may be obtained from the manufacturers test certificates or defined as the percentage ratio of the variation of the prestressing stress over the initial prestressing stress, should be determined by applying one of the Expressions below. Expressions (3.28) and (3.29) apply for wires or strands for ordinary prestressing and low relaxation tendons respectively, whereas Expression (3.30) applies for hot rolled and processed bars.

Class 1
$$\frac{\Delta\sigma_{pr}}{\sigma_{pi}} = 5{,}39\ \rho_{1000}\ e^{6{,}7\,\mu}\left(\frac{t}{1000}\right)^{0{,}75\,(1-\mu)} 10^{-5} \qquad (3.28)$$

Class 2
$$\frac{\Delta\sigma_{pr}}{\sigma_{pi}} = 0{,}66\ \rho_{1000}\ e^{9{,}1\,\mu}\left(\frac{t}{1000}\right)^{0{,}75\,(1-\mu)} 10^{-5} \qquad (3.29)$$

Class 3
$$\frac{\Delta\sigma_{pr}}{\sigma_{pi}} = 1{,}98\ \rho_{1000}\ e^{8\,\mu}\left(\frac{t}{1000}\right)^{0{,}75\,(1-\mu)} 10^{-5} \qquad (3.30)$$

Where

$\Delta\sigma_{pr}$ is absolute value of the relaxation losses of the prestress

σ_{pi} For post-tensioning σ_{pi} is the absolute value of the initial prestress $\sigma_{pi} = \sigma_{pm0}$ (see also 5.10.3 (2));

Licensed copy:University of Wales Trinity Saint David, 12/03/2020, Uncontrolled Copy, © BSI

For pre-tensioning σ_{pi} is the maximum tensile stress applied to the tendon minus the immediate losses occurred during the stressing process see 5.10.4 (1) (i)

t is the time after tensioning (in hours)

μ = σ_{pi}/f_{pk}, where f_{pk} is the characteristic value of the tensile strength of the prestressing steel

ρ_{1000} is the value of relaxation loss (in %), at 1000 hours after tensioning and at a mean temperature of 20°C.

Note: Where the relaxation losses are calculated for different time intervals (stages) and greater accuracy is required, reference should be made to Annex D.

(8) The long term (final) values of the relaxation losses may be estimated for a time t equal to 500 000 hours (i.e. around 57 years).

(9) Relaxation losses are very sensitive to the temperature of the steel. Where heat treatment [AC1] is applied (e.g. by steam), 10.3.2.1 applies. Otherwise where this temperature is greater than [AC1] 50°C the relaxation losses should be verified.

3.3.3 Strength

(1)P The 0,1% proof stress ($f_{p0,1k}$) and the specified value of the tensile strength (f_{pk}) are defined as the characteristic value of the 0,1% proof load and the characteristic maximum load in axial tension respectively, divided by the nominal cross sectional area as shown in Figure 3.9.

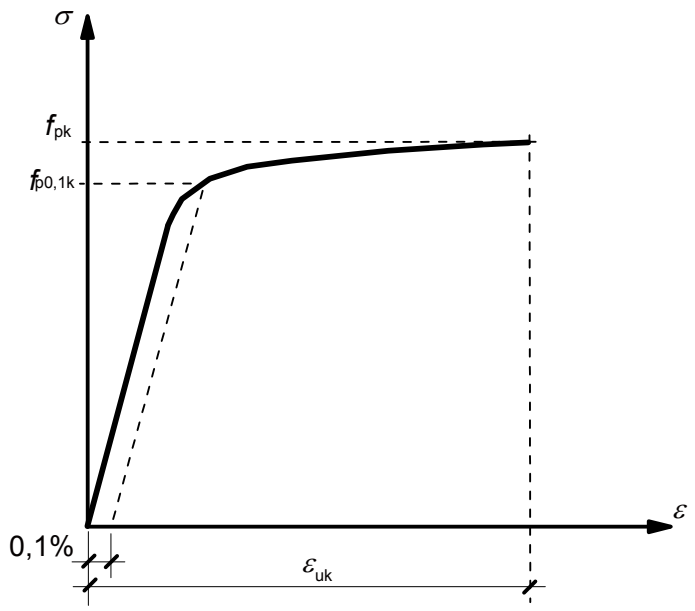

Figure 3.9: Stress-strain diagram for typical prestressing steel (absolute values are shown for tensile stress and strain)

3.3.4 Ductility characteristics

(1)P The prestressing tendons shall have adequate ductility, as specified in EN 10138.

(2) Adequate ductility in elongation may be assumed if the prestressing tendons obtain the specified value of the elongation at maximum load given in EN 10138.

Licensed copy:University of Wales Trinity Saint David, 12/03/2020, Uncontrolled Copy, © BSI

(3) Adequate ductility in bending may be assumed if the prestressing tendons satisfy the requirements for bendability of EN ISO 15630.

(4) Stress-strain diagrams for the prestressing tendons, based on production data, shall be prepared and made available by the producer as an annex to the certificate accompanying the consignment (see 3.3.1 (9)P).

(5) Adequate ductility in tension may be assumed for the prestressing tendons if A1 $(f_p / f_{p0,1})_k \geq k$. A1

Note: The value of k for use in a Country may be found in its National Annex. The recommended value is 1,1.

3.3.5 Fatigue

(1)P Prestressing tendons shall have adequate fatigue strength.

(2)P The fatigue stress range for prestressing tendons shall be in accordance with EN 10138 or given in an appropriate European Technical Approval.

3.3.6 Design assumptions

(1)P Structural analysis is performed on the basis of the nominal cross-section area of the prestressing steel and the characteristic values $f_{p0,1k}$, f_{pk} and ε_{uk}.

(2) The design value for the modulus of elasticity, E_p may be assumed equal to 205 GPa for wires and bars. The actual value can range from 195 to 210 GPa, depending on the manufacturing process. Certificates accompanying the consignment should give the appropriate value.

(3) The design value for the modulus of elasticity, E_p may be assumed equal to 195 GPa for strand. The actual value can range from 185 GPa to 205 GPa, depending on the manufacturing process. Certificates accompanying the consignment should give the appropriate value.

(4) The mean density of prestressing tendons for the purposes of design may normally be taken as 7850 kg/m^3

(5) The values given above may be assumed to be valid within a temperature range between -40°C and +100°C for the prestressing steel in the finished structure.

(6) The design value for the steel stress, f_{pd}, is taken as $f_{p0,1k}/\gamma_S$ (see Figure 3.10).

(7) For cross-section design, either of the following assumptions may be made (see Figure 3.10):

- an inclined branch, with a strain limit ε_{ud}. The design may also be based on the actual stress/strain relationship, if this is known, with stress above the elastic limit reduced analogously with Figure 3.10, or

- a horizontal top branch without strain limit.

Note: The value of ε_{ud} for use in a Country may be found in its National Annex. The recommended value is $0{,}9\varepsilon_{uk}$. If more accurate values are not known the recommended values are ε_{ud} = 0,02 and $f_{p0,1k}/f_{pk}$ = 0,9.

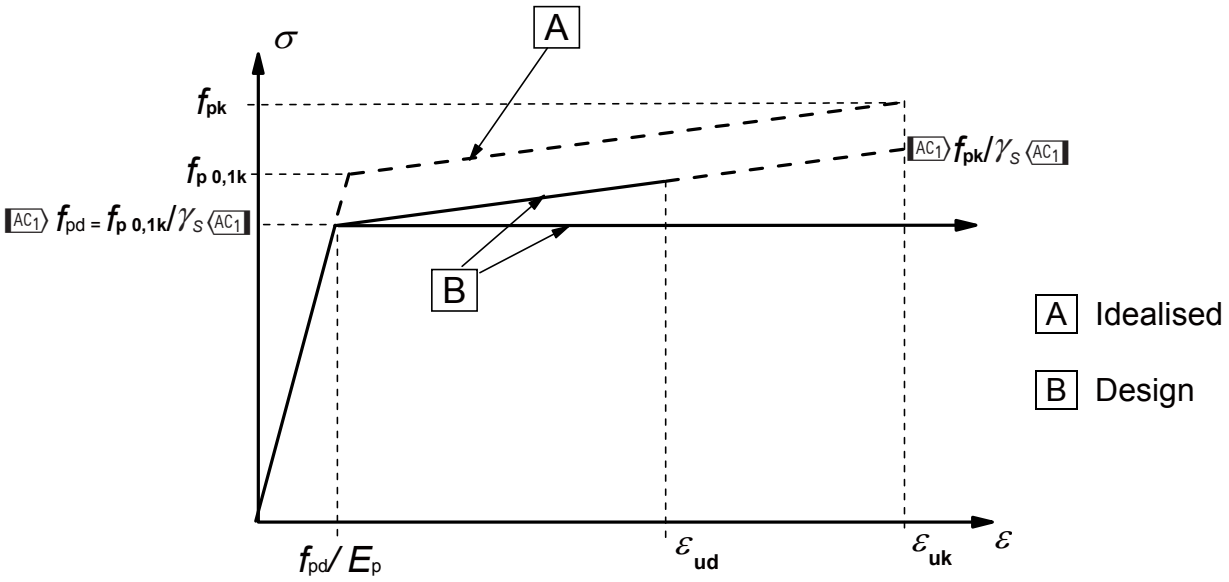

Figure 3.10: Idealised and design stress-strain diagrams for prestressing steel (absolute values are shown for tensile stress and strain)

3.3.7 Prestressing tendons in sheaths

(1)P Prestressing tendons in sheaths (e.g. bonded tendons in ducts, unbonded tendons etc.) shall be adequately and permanently protected against corrosion (see 4.3).

(2)P Prestressing tendons in sheaths shall be adequately protected against the effects of fire (see EN 1992-1-2).

3.4 Prestressing devices

3.4.1 Anchorages and couplers

3.4.1.1 General

(1)P 3.4.1 applies to anchoring devices (anchorages) and coupling devices (couplers) for application in post-tensioned construction, where:

(i) anchorages are used to transmit the forces in tendons to the concrete in the anchorage zone

(ii) couplers are used to connect individual lengths of tendon to make continuous tendons.

(2)P Anchorages and couplers for the prestressing system considered shall be in accordance with the relevant European Technical Approval.

(3)P Detailing of anchorage zones shall be in accordance with 5.10, 8.10.3 and 8.10.4.

3.4.1.2 Mechanical properties

3.4.1.2.1 Anchored tendons

(1)P Prestressing tendon anchorage assemblies and prestressing tendon coupler assemblies shall have strength, elongation and fatigue characteristics sufficient to meet the requirements of the design.

Licensed copy:University of Wales Trinity Saint David, 12/03/2020, Uncontrolled Copy, © BSI

Licensed copy:University of Wales Trinity Saint David, 12/03/2020, Uncontrolled Copy, © BSI

(2) This may be assumed provided that:

(i) The geometry and material characteristics of the anchorage and coupler components are in accordance with the appropriate European Technical Approval and that their premature failure is precluded.

(ii) Failure of the tendon is not induced by the connection to the anchorage or coupler.

(iii) The elongation at failure of the assemblies ≥ 2%.

(iv) Tendon-anchorage assemblies are not located in otherwise highly-stressed zones.

(v) Fatigue characteristics of the anchorage and coupler components are in accordance with the appropriate European Technical Approval.

3.4.1.2.2 Anchorage devices and anchorage zones

(1)P The strength of the anchorage devices and zones shall be sufficient for the transfer of the tendon force to the concrete and the formation of cracks in the anchorage zone shall not impair the function of the anchorage.

3.4.2 External non-bonded tendons

3.4.2.1 General

(1)P An external non-bonded tendon is a tendon situated outside the original concrete section and is connected to the structure by anchorages and deviators only.

(2)P The post-tensioning system for the use with external tendons shall be in accordance with the appropriate European Technical Approval.

(3) Reinforcement detailing should follow the rules given in 8.10.

3.4.2.2 Anchorages

(1) The minimum radius of curvature of the tendon in the anchorage zone for non- bonded tendons should be given in the appropriate European Technical Approval.

Licensed copy:University of Wales Trinity Saint David, 12/03/2020, Uncontrolled Copy, © BSI

SECTION 4 DURABILITY AND COVER TO REINFORCEMENT

4.1 General

(1)P A durable structure shall meet the requirements of serviceability, strength and stability throughout its design working life, without significant loss of utility or excessive unforeseen maintenance (for general requirements see also EN 1990).

(2)P The required protection of the structure shall be established by considering its intended use, design working life (see EN 1990), maintenance programme and actions.

(3)P The possible significance of direct and indirect actions, environmental conditions (4.2) and consequential effects shall be considered.

Note: Examples include deformations due to creep and shrinkage (see 2.3.2).

(4) Corrosion protection of steel reinforcement depends on density, quality and thickness of concrete cover (see 4.4) and cracking (see 7.3). The cover density and quality is achieved by controlling the maximum water/cement ratio and minimum cement content (see EN 206-1) and may be related to a minimum strength class of concrete.

Note: Further information is given in Annex E.

(5) Where metal fastenings are inspectable and replaceable, they may be used with protective coatings in exposed situations. Otherwise, they should be of corrosion resistant material.

(6) Further requirements to those given in this Section should be considered for special situations (e.g. for structures of temporary or monumental nature, structures subjected to extreme or unusual actions etc.).

4.2 Environmental conditions

(1)P Exposure conditions are chemical and physical conditions to which the structure is exposed in addition to the mechanical actions.

(2) Environmental conditions are classified according to Table 4.1, based on EN 206-1.

(3) In addition to the conditions in Table 4.1, particular forms of aggressive or indirect action should be considered including:

chemical attack, arising from e.g.
- the use of the building or the structure (storage of liquids, etc)
- solutions of acids or sulfate salts (EN 206-1, ISO 9690)
- chlorides contained in the concrete (EN 206-1)
- alkali-aggregate reactions (EN 206-1, National Standards)

physical attack, arising from e.g.
- temperature change
- abrasion (see 4.4.1.2 (13))
- water penetration (EN 206-1).

Licensed copy:University of Wales Trinity Saint David, 12/03/2020, Uncontrolled Copy, © BSI

Table 4.1: Exposure classes related to environmental conditions in accordance with EN 206-1

Class designation	Description of the environment	Informative examples where exposure classes may occur
1 No risk of corrosion or attack		
X0	For concrete without reinforcement or embedded metal: all exposures except where there is freeze/thaw, abrasion or chemical attack For concrete with reinforcement or embedded metal: very dry	Concrete inside buildings with very low air humidity
2 Corrosion induced by carbonation		
XC1	Dry or permanently wet	Concrete inside buildings with low air humidity Concrete permanently submerged in water
XC2	Wet, rarely dry	Concrete surfaces subject to long-term water contact Many foundations
XC3	Moderate humidity	Concrete inside buildings with moderate or high air humidity External concrete sheltered from rain
XC4	Cyclic wet and dry	Concrete surfaces subject to water contact, not within exposure class XC2
3 Corrosion induced by chlorides		
XD1	Moderate humidity	Concrete surfaces exposed to airborne chlorides
XD2	Wet, rarely dry	Swimming pools Concrete components exposed to industrial waters containing chlorides
XD3	Cyclic wet and dry	Parts of bridges exposed to spray containing chlorides Pavements Car park slabs
4 Corrosion induced by chlorides from sea water		
XS1	Exposed to airborne salt but not in direct contact with sea water	Structures near to or on the coast
XS2	Permanently submerged	Parts of marine structures
XS3	Tidal, splash and spray zones	Parts of marine structures
5. Freeze/Thaw Attack		
XF1	Moderate water saturation, without de-icing agent	Vertical concrete surfaces exposed to rain and freezing
XF2	Moderate water saturation, with de-icing agent	Vertical concrete surfaces of road structures exposed to freezing and airborne de-icing agents
XF3	High water saturation, without de-icing agents	Horizontal concrete surfaces exposed to rain and freezing
XF4	High water saturation with de-icing agents or sea water	Road and bridge decks exposed to de-icing agents Concrete surfaces exposed to direct spray containing de-icing agents and freezing Splash zone of marine structures exposed to freezing
6. Chemical attack		
XA1	Slightly aggressive chemical environment according to EN 206-1, Table 2	Natural soils and ground water
XA2	Moderately aggressive chemical environment according to EN 206-1, Table 2	Natural soils and ground water
XA3	Highly aggressive chemical environment according to EN 206-1, Table 2	Natural soils and ground water

Licensed copy:University of Wales Trinity Saint David, 12/03/2020, Uncontrolled Copy, © BSI

Note: The composition of the concrete affects both the protection of the reinforcement and the resistance of the concrete to attack. Annex E gives indicative strength classes for the particular environmental exposure classes. This may lead to the choice of higher strength classes than required for the structural design. In such cases the value of f_{ctm} should be associated with the higher strength in the calculation of minimum reinforcement and crack width control (see 7.3.2 -7.3.4).

4.3 Requirements for durability

(1)P In order to achieve the required design working life of the structure, adequate measures shall be taken to protect each structural element against the relevant environmental actions.

(2)P The requirements for durability shall be included when considering the following:
Structural conception,
Material selection,
Construction details,
Execution,
Quality Control,
Inspection,
Verifications,
Special measures (e.g. use of stainless steel, coatings, cathodic protection).

4.4 Methods of verification

4.4.1 Concrete cover

4.4.1.1 General

(1)P The concrete cover is the distance between the surface of the reinforcement closest to the nearest concrete surface (including links and stirrups and surface reinforcement where relevant) and the nearest concrete surface.

(2)P The nominal cover shall be specified on the drawings. It is defined as a minimum cover, c_{min} (see 4.4.1.2), plus an allowance in design for deviation, Δc_{dev} (see 4.4.1.3):

$$c_{nom} = c_{min} + \Delta c_{dev} \tag{4.1}$$

4.4.1.2 Minimum cover, c_{min}

(1)P Minimum concrete cover, c_{min}, shall be provided in order to ensure:
- the safe transmission of bond forces (see also Sections 7 and 8)
- the protection of the steel against corrosion (durability)
- an adequate fire resistance (see EN 1992-1-2)

(2)P The greater value for c_{min} satisfying the requirements for both bond and environmental conditions shall be used.

$$c_{min} = \max \{c_{min,b};\ c_{min,dur} + \Delta c_{dur,\gamma} - \Delta c_{dur,st} - \Delta c_{dur,add};\ 10\ \text{mm}\} \tag{4.2}$$

where:
$c_{min,b}$ minimum cover due to bond requirement, see 4.4.1.2 (3)
$c_{min,dur}$ minimum cover due to environmental conditions, see 4.4.1.2 (5)
$\Delta c_{dur,\gamma}$ additive safety element, see 4.4.1.2 (6)
$\Delta c_{dur,st}$ reduction of minimum cover for use of stainless steel, see 4.4.1.2 (7)
$\Delta c_{dur,add}$ reduction of minimum cover for use of additional protection, see 4.4.1.2 (8)

Licensed copy:University of Wales Trinity Saint David, 12/03/2020, Uncontrolled Copy, © BSI

(3) In order to transmit bond forces safely and to ensure adequate compaction of the concrete, the minimum cover should not be less than $c_{min,b}$ given in table 4.2.

Table 4.2: Minimum cover, $c_{min,b}$, requirements with regard to bond

Bond Requirement	
Arrangement of bars	Minimum cover $c_{min,b}$*
Separated	Diameter of bar
Bundled	Equivalent diameter (ϕ_n)(see 8.9.1)
*: If the nominal maximum aggregate size is greater than 32 mm, $c_{min,b}$ should be increased by 5 mm.	

Note: The values of $c_{min,b}$ for post-tensioned circular and rectangular ducts for bonded tendons, and pre-tensioned tendons for use in a Country may be found in its National Annex. The recommended values for post-tensioned ducts are:

circular ducts: diameter

rectangular ducts: greater of the smaller dimension or half the greater dimension

There is no requirement for more than 80 mm for either circular or rectangular ducts.

The recommended values for pre-tensioned tendon:

1,5 x diameter of strand or plain wire

2,5 x diameter of indented wire.

(4) For prestressing tendons, the minimum cover of the anchorage should be provided in accordance with the appropriate European Technical Approval.

(5) The minimum cover values for reinforcement and prestressing tendons in normal weight concrete taking account of the exposure classes and the structural classes is given by $c_{min,dur}$.

Note: Structural classification and values of $c_{min,dur}$ for use in a Country may be found in its National Annex. The recommended Structural Class (design working life of 50 years) is S4 for the indicative concrete strengths given in Annex E and the recommended modifications to the structural class is given in Table 4.3N. The recommended minimum Structural Class is S1.

The recommended values of $c_{min,dur}$ are given in Table 4.4N (reinforcing steel) and Table 4.5N (prestressing steel).

Table 4.3N: Recommended structural classification

Structural Class							
Criterion	**Exposure Class according to Table 4.1**						
	X0	XC1	XC2 / XC3	XC4	XD1	XD2 / XS1	XD3 / XS2 / XS3
Design Working Life of 100 years	increase class by 2	increase class by 2	increase class by 2	increase class by 2	increase class by 2	increase class by 2	increase class by 2
Strength Class [1) 2)]	≥ C30/37 reduce class by 1	≥ C30/37 reduce class by 1	≥ C35/45 reduce class by 1	≥ C40/50 reduce class by 1	≥ C40/50 reduce class by 1	≥ C40/50 reduce class by 1	≥ C45/55 reduce class by 1
Member with slab geometry (position of reinforcement not affected by construction process)	reduce class by 1	reduce class by 1	reduce class by 1	reduce class by 1	reduce class by 1	reduce class by 1	reduce class by 1
Special Quality Control of the concrete production ensured	reduce class by 1	reduce class by 1	reduce class by 1	reduce class by 1	reduce class by 1	reduce class by 1	reduce class by 1

Notes to Table 4.3N

1. The strength class and w/c ratio are considered to be related values. A special composition (type of cement, w/c value, fine fillers) with the intent to produce low permeability may be considered.

2. The limit may be reduced by one strength class if air entrainment of more than 4% is applied.

Licensed copy:University of Wales Trinity Saint David, 12/03/2020, Uncontrolled Copy, © BSI

Table 4.4N: Values of minimum cover, $c_{min,dur}$, requirements with regard to durability for reinforcement steel in accordance with EN 10080.

Environmental Requirement for $c_{min,dur}$ (mm)							
Structural Class	**Exposure Class according to Table 4.1**						
	X0	XC1	XC2 / XC3	XC4	XD1 / XS1	XD2 / XS2	XD3 / XS3
S1	10	10	10	15	20	25	30
S2	10	10	15	20	25	30	35
S3	10	10	20	25	30	35	40
S4	10	15	25	30	35	40	45
S5	15	20	30	35	40	45	50
S6	20	25	35	40	45	50	55

Table 4.5N: Values of minimum cover, $c_{min,dur}$, requirements with regard to durability for prestressing steel

Environmental Requirement for $c_{min,dur}$ (mm)							
Structural Class	**Exposure Class according to Table 4.1**						
	X0	XC1	XC2 / XC3	XC4	XD1 / XS1	XD2 / XS2	XD3 / XS3
S1	10	15	20	25	30	35	40
S2	10	15	25	30	35	40	45
S3	10	20	30	35	40	45	50
S4	10	25	35	40	45	50	55
S5	15	30	40	45	50	55	60
S6	20	35	45	50	55	60	65

(6) The concrete cover should be increased by the additive safety element $\Delta c_{dur,\gamma}$.

Note: The value of $\Delta c_{dur,\gamma}$ for use in a Country may be found in its National Annex. The recommended value is 0 mm.

(7) Where stainless steel is used or where other special measures have been taken, the minimum cover may be reduced by $\Delta c_{dur,st}$. For such situations the effects on all relevant material properties should be considered, including bond.

Note: The value of $\Delta c_{dur,st}$ for use in a Country may be found in its National Annex. The recommended value, without further specification, is 0 mm.

(8) For concrete with additional protection (e.g. coating) the minimum cover may be reduced by $\Delta c_{dur,add}$.

Note: The value of $\Delta c_{dur,add}$ for use in a Country may be found in its National Annex. The recommended value, without further specification, is 0 mm.

(9) Where in-situ concrete is placed against other concrete elements (precast or in-situ) the minimum concrete cover of the reinforcement to the interface may be reduced to a value corresponding to the requirement for bond (see (3) above) provided that:

- the strength class of concrete is at least C25/30,
- the exposure time of the concrete surface to an outdoor environment is short (< 28 days),
- the interface has been roughened.

(10) For unbonded tendons the cover should be provided in accordance with the European Technical Approval.

(11) For uneven surfaces (e.g. exposed aggregate) the minimum cover should be increased by at least 5 mm.

Licensed copy:University of Wales Trinity Saint David, 12/03/2020, Uncontrolled Copy, © BSI

(12) Where freeze/thaw or chemical attack on concrete (Classes XF and XA) is expected special attention should be given to the concrete composition (see EN 206-1 Section 6). Cover in accordance with 4.4 will normally be sufficient for such situations.

(13) For concrete abrasion special attention should be given on the aggregate according to EN 206-1. Optionally concrete abrasion may be allowed for by increasing the concrete cover (sacrificial layer). In that case the minimum cover c_{min} should be increased by k_1 for Abrasion Class XM1, by k_2 for XM2 and by k_3 for XM3.

Note: Abrasion Class XM1 means a moderate abrasion like for members of industrial sites frequented by vehicles with air tyres. Abrasion Class XM2 means a heavy abrasion like for members of industrial sites frequented by fork lifts with air or solid rubber tyres. Abrasion Class XM3 means an extreme abrasion like for members industrial sites frequented by fork lifts with elastomer or steel tyres or track vehicles.
The values of k_1, k_2 and k_3 for use in a Country may be found in its National Annex. The recommended values are 5 mm, 10 mm and 15 mm.

4.4.1.3 Allowance in design for deviation

(1)P To calculate the nominal cover, c_{nom}, an addition to the minimum cover shall be made in design to allow for the deviation (Δc_{dev}). The required minimum cover shall be increased by the absolute value of the accepted negative deviation.

Note: The value of Δc_{dev} for use in a Country may be found in its National Annex. The recommended value is 10 mm.

(2) For Buildings, ENV 13670-1 gives the acceptable deviation. This is normally also sufficient for other types of structures. It should be considered when choosing the value of nominal cover for design. The nominal value of cover for design should be used in the calculations and stated on the drawings, unless a value other than the nominal cover is specified (e.g. minimum value).

(3) In certain situations, the accepted deviation and hence allowance, Δc_{dev}, may be reduced.

Note: The reduction in Δc_{dev} in such circumstances for use in a Country may be found in its National Annex. The recommended values are:

- where fabrication is subjected to a quality assurance system, in which the monitoring includes measurements of the concrete cover, the allowance in design for deviation Δc_{dev} may be reduced:

$$10 \text{ mm} \geq \Delta c_{dev} \geq 5 \text{ mm} \quad (4.3N)$$

- where it can be assured that a very accurate measurement device is used for monitoring and non conforming members are rejected (e.g. precast elements), the allowance in design for deviation Δc_{dev} may be reduced:

$$10 \text{ mm} \geq \Delta c_{dev} \geq 0 \text{ mm} \quad (4.4N)$$

[AC1](4) For concrete cast against uneven surfaces, the nominal cover should generally be [AC1] increased by allowing larger deviations in design. The increase should comply with the [AC1]difference caused by the unevenness, but the nominal cover should be at least k_1 mm for[AC1] concrete cast against prepared ground (including blinding) and k_2 mm for concrete cast directly against soil. The cover to the reinforcement for any surface feature, such as ribbed finishes or exposed aggregate, should also be increased to take account of the uneven surface (see 4.4.1.2 (11)).

Note: The values of k_1 and k_2 for use in a Country may be found in its National Annex. The recommended values are 40 mm and 75 mm.

Licensed copy:University of Wales Trinity Saint David, 12/03/2020, Uncontrolled Copy, © BSI

SECTION 5 STRUCTURAL ANALYSIS

5.1 General

5.1.1 General requirements

(1)P The purpose of structural analysis is to establish the distribution of either internal forces and moments, or stresses, strains and displacements, over the whole or part of a structure. Additional local analysis shall be carried out where necessary.

Note: In most normal cases analysis will be used to establish the distribution of internal forces and moments, and the complete verification or demonstration of resistance of cross sections is based on these action effects; however, for certain particular elements, the methods of analysis used (e.g. finite element analysis) give stresses, strains and displacements rather than internal forces and moments. Special methods are required to use these results to obtain appropriate verification.

(2) Local analyses may be necessary where the assumption of linear strain distribution is not valid, e.g.:
- in the vicinity of supports
- local to concentrated loads
- in beam-column intersections
- in anchorage zones
- at changes in cross section.

(3) For in-plane stress fields a simplified method for determining reinforcement may be used.

Note: A simplified method is given in Annex F.

(4)P Analyses shall be carried out using idealisations of both the geometry and the behaviour of the structure. The idealisations selected shall be appropriate to the problem being considered.

AC1 *Clause deleted*

(5)P The effect of the geometry and properties of the structure on its behaviour at each stage of construction shall be considered in the design

(6) Common idealisations of the behaviour used for analysis are:
- linear elastic behaviour (see 5.4)
- linear elastic behaviour with limited redistribution (see 5.5)
- plastic behaviour (see 5.6), including strut and tie models (see 5.6.4)
- non-linear behaviour (see 5.7)

(7) In buildings, the effects of shear and axial forces on the deformations of linear elements and slabs may be ignored where these are likely to be less than 10% of those due to bending. AC1

5.1.2 Special requirements for foundations

(1)P Where ground-structure interaction has significant influence on the action effects in the structure, the properties of the soil and the effects of the interaction shall be taken into account in accordance with EN 1997-1.

Note: For more information concerning the analysis of shallow foundations see Annex G.

Licensed copy:University of Wales Trinity Saint David, 12/03/2020, Uncontrolled Copy, © BSI

(2) For the design of spread foundations, appropriately simplified models for the description of the soil-structure interaction may be used.

Note: For simple pad footings and pile caps the effects of soil-structure interaction may usually be ignored.

(3) For the strength design of individual piles the actions should be determined taking into account the interaction between the piles, the pile cap and the supporting soil.

(4) Where the piles are located in several rows, the action on each pile should be evaluated by considering the interaction between the piles.

(5) This interaction may be ignored when the clear distance between the piles is greater than two times the pile diameter.

5.1.3 Load cases and combinations

(1)P In considering the combinations of actions, see EN 1990 Section 6, the relevant cases shall be considered to enable the critical design conditions to be established at all sections, within the structure or part of the structure considered.

Note: Where a simplification in the number of load arrangements for use in a Country is required, reference is made to its National Annex. The following simplified load arrangements are recommended for buildings:

(a) alternate spans carrying the design variable and permanent load ($\gamma_Q Q_k + \gamma_G G_k + P_m$), other spans carrying only the design permanent load, $\gamma_G G_k + P_m$ and

(b) any two adjacent spans carrying the design variable and permanent loads ($\gamma_Q Q_k + \gamma_G G_k + P_m$). All other spans carrying only the design permanent load, $\gamma_G G_k + P_m$.

5.1.4 Second order effects

(1)P Second order effects (see EN 1990 Section 1) shall be taken into account where they are likely to affect the overall stability of a structure significantly and for the attainment of the ultimate limit state at critical sections.

(2) Second order effects should be taken into account according to 5.8.

(3) For buildings, second order effects below certain limits may be ignored (see 5.8.2 (6)).

5.2 Geometric imperfections

(1)P The unfavourable effects of possible deviations in the geometry of the structure and the position of loads shall be taken into account in the analysis of members and structures.

Note: Deviations in cross section dimensions are normally taken into account in the material safety factors. These should not be included in structural analysis. A minimum eccentricity for cross section design is given in 6.1 (4).

(2)P Imperfections shall be taken into account in ultimate limit states in persistent and accidental design situations.

(3) Imperfections need not be considered for serviceability limit states.

(4) The following provisions apply for members with axial compression and structures with vertical load, mainly in buildings. Numerical values are related to normal execution deviations

(Class 1 in ENV 13670). With the use of other deviations (e.g. Class 2), values should be adjusted accordingly.

(5) Imperfections may be represented by an inclination, θ_i, given by:

$$\theta_i = \theta_0 \cdot \alpha_h \cdot \alpha_m \tag{5.1}$$

where

θ_0 is the basic value:

α_h is the reduction factor for length or height: $\alpha_h = 2/\sqrt{l}$; $2/3 \leq \alpha_h \leq 1$

α_m is the reduction factor for number of members: $\alpha_m = \sqrt{0{,}5(1+1/m)}$

[AC1] l is the length or height [m], see (6) [AC1]

m is the number of vertical members contributing to the total effect

Note: The value of θ_0 for use in a Country may be found in its National Annex. The recommended value is 1/200

(6) In Expression (5.1), the definition of l and m depends on the effect considered, for which three main cases can be distinguished (see also Figure 5.1):

- Effect on isolated member: l = actual length of member, m =1.
- Effect on bracing system: l = height of building, m = number of vertical members contributing to the horizontal force on the bracing system.
- Effect on floor or roof diaphragms distributing the horizontal loads: l = storey height, m = number of vertical elements in the storey(s) contributing to the total horizontal force on the floor.

(7) For isolated members (see 5.8.1), the effect of imperfections may be taken into account in two alternative ways a) or b):

a) as an eccentricity, e_i, given by

$$e_i = \theta_i \, l_0 / 2 \tag{5.2}$$

where l_0 is the effective length, see 5.8.3.2

For walls and isolated columns in braced systems, $e_i = l_0/400$ may always be used as a simplification, corresponding to $\alpha_h = 1$.

b) as a transverse force, H_i, in the position that gives maximum moment:

for unbraced members (see Figure 5.1 a1):

$$H_i = \theta_i N \tag{5.3a}$$

for braced members (see Figure 5.1 a2):

$$H_i = 2\theta_i N \tag{5.3b}$$

where N is the axial load

Note: Eccentricity is suitable for statically determinate members, whereas transverse load can be used for both determinate and indeterminate members. The force H_i may be substituted by some other equivalent transverse action.

Licensed copy:University of Wales Trinity Saint David, 12/03/2020, Uncontrolled Copy, © BSI

Licensed copy:University of Wales Trinity Saint David, 12/03/2020, Uncontrolled Copy, © BSI

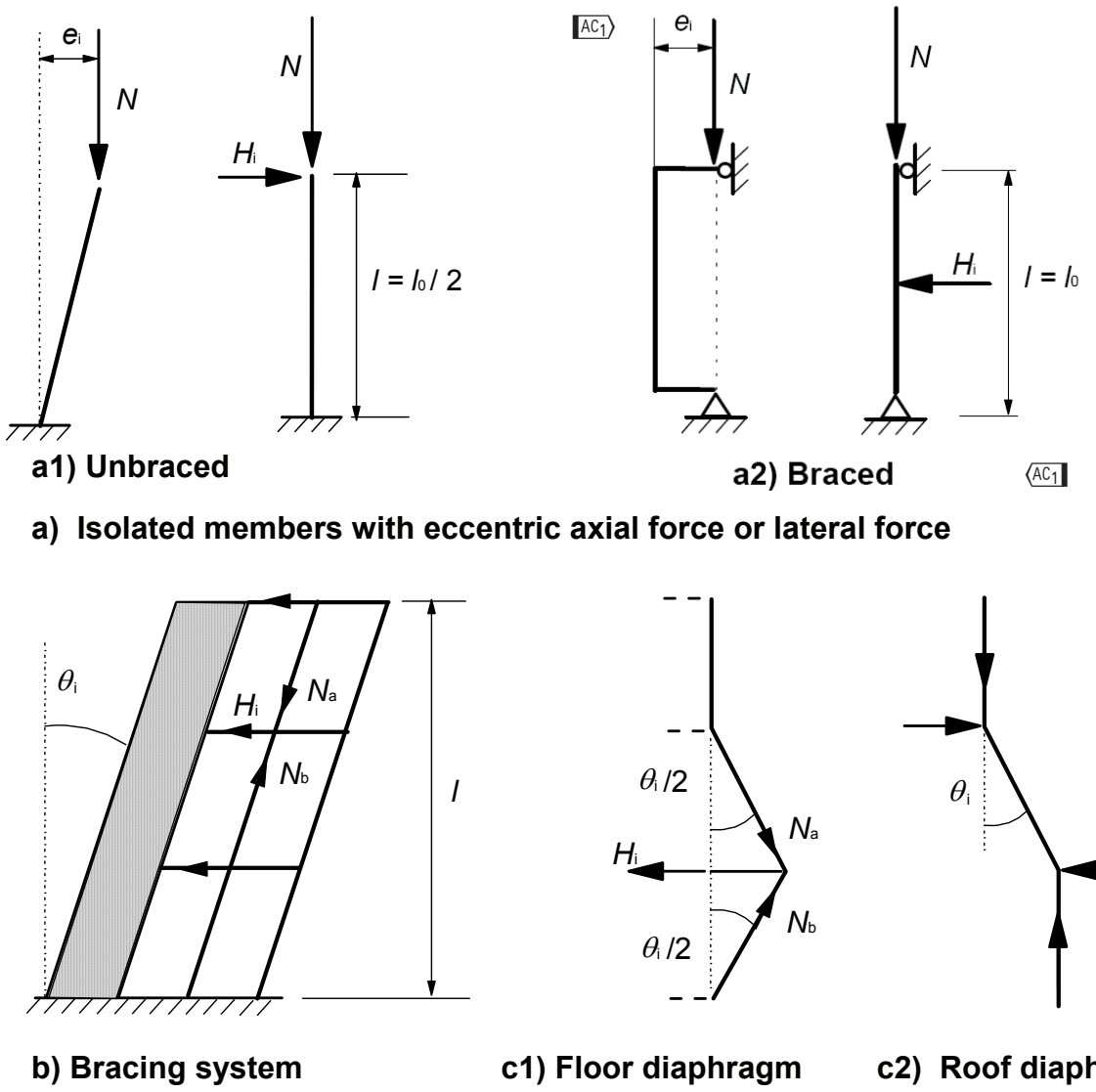

Figure 5.1: Examples of the effect of geometric imperfections

(8) For structures, the effect of the inclination θ_i may be represented by transverse forces, to be included in the analysis together with other actions.

Effect on bracing system, (see Figure 5.1 b):

$$H_i = \theta_i (N_b - N_a) \tag{5.4}$$

Effect on floor diaphragm, (see Figure 5.1 c1):

$$H_i = \theta_i (N_b + N_a) / 2 \tag{5.5}$$

Effect on roof diaphragm, (see Figure 5.1 c2):

$$H_i = \theta_i \cdot N_a \tag{5.6}$$

where N_a and N_b are longitudinal forces contributing to H_i.

(9) As a simplified alternative for walls and isolated columns in braced systems, an eccentricity $e_i = l_0/400$ may be used to cover imperfections related to normal execution deviations (see 5.2(4)).

Licensed copy:University of Wales Trinity Saint David, 12/03/2020, Uncontrolled Copy, © BSI

5.3 Idealisation of the structure

5.3.1 Structural models for overall analysis

(1)P The elements of a structure are classified, by consideration of their nature and function, as beams, columns, slabs, walls, plates, arches, shells etc. Rules are provided for the analysis of the commoner of these elements and of structures consisting of combinations of these elements.

(2) For buildings the following provisions (3) to (7) are applicable:

(3) A beam is a member for which the span is not less than 3 times the overall section depth. Otherwise it should be considered as a deep beam.

(4) A slab is a member for which the minimum panel dimension is not less than 5 times the overall slab thickness.

(5) A slab subjected to dominantly uniformly distributed loads may be considered to be one-way spanning if either:
- it possesses two free (unsupported) and sensibly parallel edges, or
- it is the central part of a sensibly rectangular slab supported on four edges with a ratio of the longer to shorter span greater than 2.

(6) Ribbed or waffle slabs need not be treated as discrete elements for the purposes of analysis, provided that the flange or structural topping and transverse ribs have sufficient torsional stiffness. This may be assumed provided that:
- the rib spacing does not exceed 1500 mm
- the depth of the rib below the flange does not exceed 4 times its width.
- the depth of the flange is at least 1/10 of the clear distance between ribs or 50 mm, whichever is the greater.
- transverse ribs are provided at a clear spacing not exceeding 10 times the overall depth of the slab.

The minimum flange thickness of 50 mm may be reduced to 40 mm where permanent blocks are incorporated between the ribs.

(7) A column is a member for which the section depth does not exceed 4 times its width and the height is at least 3 times the section depth. Otherwise it should be considered as a wall.

5.3.2 Geometric data

5.3.2.1 Effective width of flanges (all limit states)

(1)P In T beams the effective flange width, over which uniform conditions of stress can be assumed, depends on the web and flange dimensions, the type of loading, the span, the support conditions and the transverse reinforcement.

(2) The effective width of flange should be based on the distance l_0 between points of zero moment, which may be obtained from Figure 5.2.

Licensed copy:University of Wales Trinity Saint David, 12/03/2020, Uncontrolled Copy, © BSI

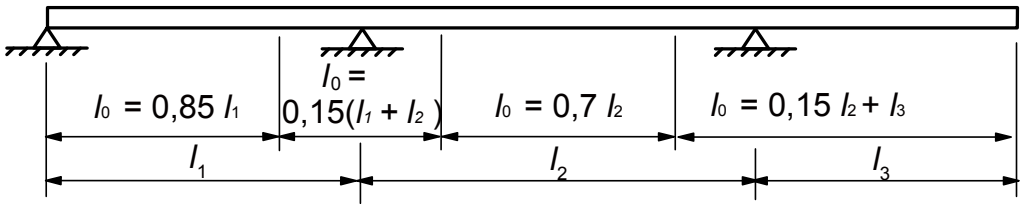

Figure 5.2: Definition of l_0, for calculation of effective flange width

Note: The length of the cantilever, l_3, should be less than half the adjacent span and the ratio of adjacent spans should lie between 2/3 and 1,5.

(3) The effective flange width b_{eff} for a T beam or *L* beam may be derived as:

$$b_{eff} = \sum b_{eff,i} + b_w \leq b \tag{5.7}$$

where

$$b_{eff,i} = 0{,}2 b_i + 0{,}1 l_0 \leq 0{,}2 l_0 \tag{5.7a}$$

and

$$b_{eff,i} \leq b_i \tag{5.7b}$$

(for the notations see Figures 5.2 above and 5.3 below).

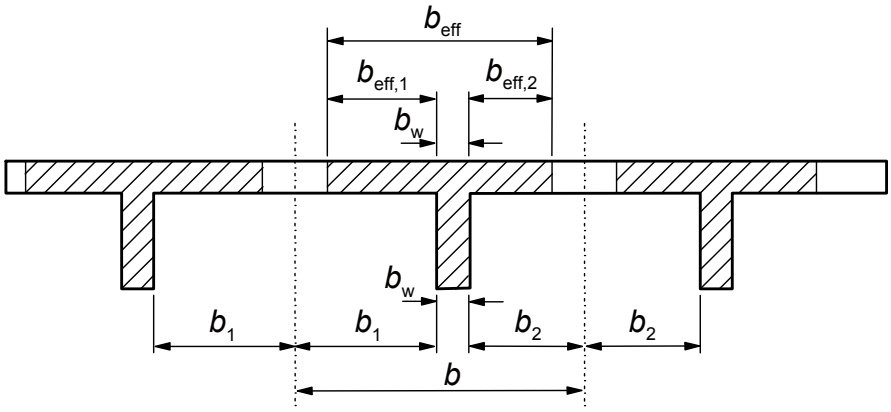

Figure 5.3: Effective flange width parameters

(4) For structural analysis, where a great accuracy is not required, a constant width may be assumed over the whole span. The value applicable to the span section should be adopted.

5.3.2.2 Effective span of beams and slabs in buildings

Note: The following provisions are provided mainly for member analysis. For frame analysis some of these simplifications may be used where appropriate.

(1) The effective span, l_{eff}, of a member should be calculated as follows:

$$l_{eff} = l_n + a_1 + a_2 \tag{5.8}$$

where:

l_n is the clear distance between the faces of the supports;

values for a_1 and a_2 , at each end of the span, may be determined from the appropriate a_i values in Figure 5.4 where *t* is the width of the supporting element as shown.

Licensed copy:University of Wales Trinity Saint David, 12/03/2020, Uncontrolled Copy, © BSI

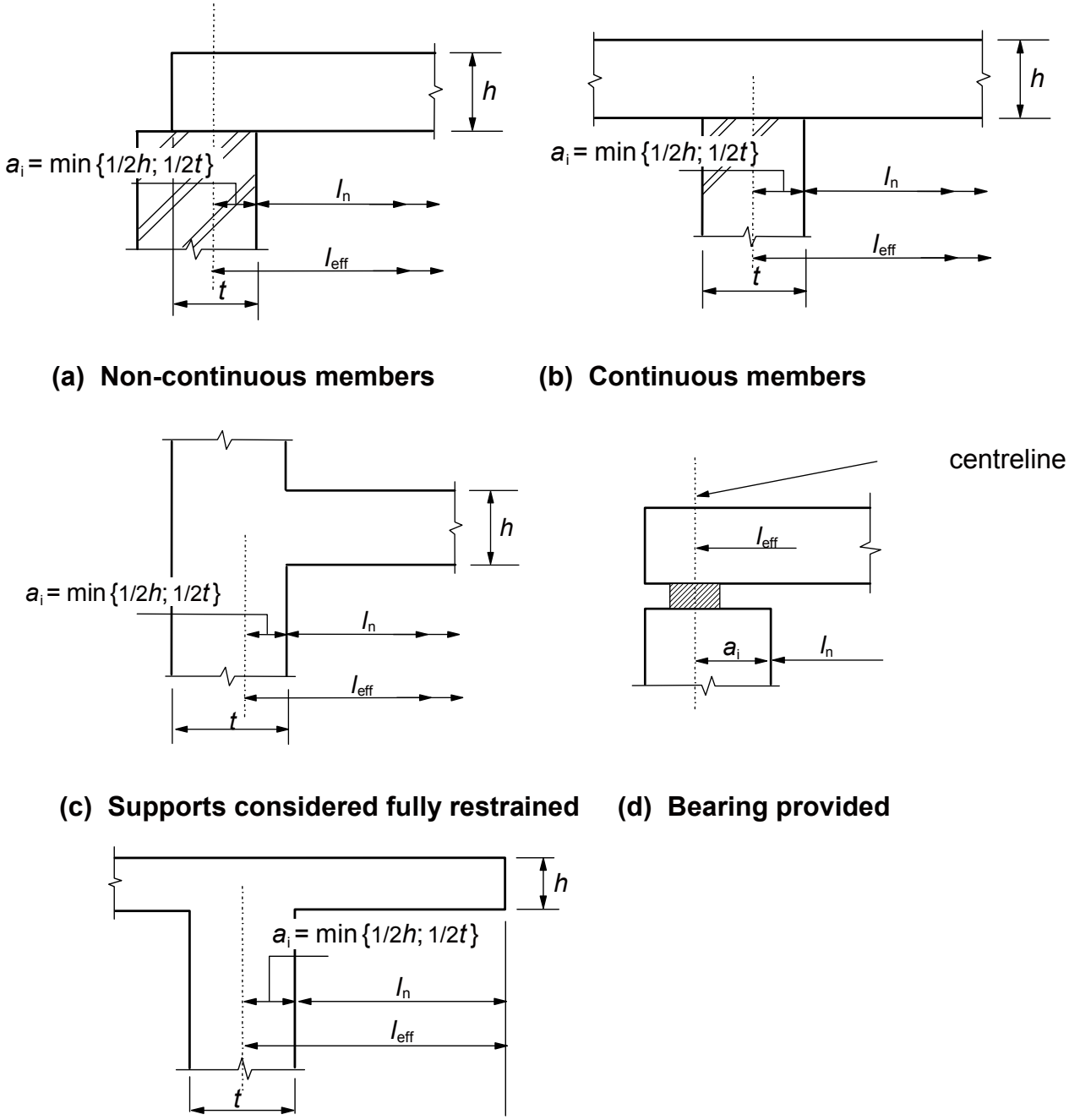

Figure 5.4: Effective span (l_{eff}) for different support conditions

(2) Continuous slabs and beams may generally be analysed on the assumption that the supports provide no rotational restraint.

(3) Where a beam or slab is monolithic with its supports, the critical design moment at the support should be taken as that at the face of the support. The design moment and reaction transferred to the supporting element (e.g. column, wall, etc.) should be generally taken as the greater of the elastic or redistributed values.

Note: The moment at the face of the support should not be less than 0,65 that of the full fixed end moment.

Licensed copy:University of Wales Trinity Saint David, 12/03/2020, Uncontrolled Copy, © BSI

(4) Regardless of the method of analysis used, where a beam or slab is continuous over a support which may be considered to provide no restraint to rotation (e.g. over walls), the design support moment, calculated on the basis of a span equal to the centre-to-centre distance between supports, may be reduced by an amount ΔM_{Ed} as follows:

$$\Delta M_{Ed} = F_{Ed,sup}\, t / 8 \qquad (5.9)$$

where:

$F_{Ed,sup}$ is the design support reaction
t is the breadth of the support (see Figure 5.4 b))

Note: Where support bearings are used t should be taken as the bearing width.

5.4 Linear elastic analysis

(1) Linear analysis of elements based on the theory of elasticity may be used for both the serviceability and ultimate limit states.

(2) For the determination of the action effects, linear analysis may be carried out assuming:
i) uncracked cross sections,
ii) linear stress-strain relationships and
iii) mean value of the modulus of elasticity.

(3) For thermal deformation, settlement and shrinkage effects at the ultimate limit state (ULS), a reduced stiffness corresponding to the cracked sections, neglecting tension stiffening but including the effects of creep, may be assumed. For the serviceability limit state (SLS) a gradual evolution of cracking should be considered.

5.5 Linear elastic analysis with limited redistribution

(1)P The influence of any redistribution of the moments on all aspects of the design shall be considered.

(2) Linear analysis with limited redistribution may be applied to the analysis of structural members for the verification of ULS.

(3) The moments at ULS calculated using a linear elastic analysis may be redistributed, provided that the resulting distribution of moments remains in equilibrium with the applied loads.

(4) In continuous beams or slabs which:
a) are predominantly subject to flexure and
b) have the ratio of the lengths of adjacent spans in the range of 0,5 to 2,
redistribution of bending moments may be carried out without explicit check on the rotation capacity, provided that:

$$\delta \geq k_1 + k_2 x_u/d \quad \text{for } f_{ck} \leq 50 \text{ MPa} \qquad (5.10a)$$

$$\delta \geq k_3 + k_4 x_u/d \quad \text{for } f_{ck} > 50 \text{ MPa} \qquad (5.10b)$$

$\geq k_5$ where Class B and Class C reinforcement is used (see Annex C)
$\geq k_6$ where Class A reinforcement is used (see Annex C)

Where:

δ is the ratio of the redistributed moment to the elastic bending moment
x_u is the depth of the neutral axis at the ultimate limit state after redistribution

Licensed copy:University of Wales Trinity Saint David, 12/03/2020, Uncontrolled Copy, © BSI

d is the effective depth of the section

Note: The values of k_1, k_2, k_3, k_4, k_5 and k_6 for use in a Country may be found in its National Annex. The recommended value for k_1 is 0,44, for k_2 is 1,25(0,6+0,0014/ε_{cu2}), for k_3 = 0,54, for k_4 = 1,25(0,6+0,0014/ε_{cu2}), for k_5 = 0,7 and k_6 = 0,8. ε_{cu2} is the ultimate strain according to Table 3.1.

(5) Redistribution should not be carried out in circumstances where the rotation capacity cannot be defined with confidence (e.g. in the corners of prestressed frames).

(6) For the design of columns the elastic moments from frame action should be used without any redistribution.

5.6 Plastic analysis

5.6.1 General

(1)P Methods based on plastic analysis shall only be used for the check at ULS.

(2)P The ductility of the critical sections shall be sufficient for the envisaged mechanism to be formed.

(3)P The plastic analysis should be based either on the lower bound (static) method or on the upper bound (kinematic) method.

Note: A Country's National Annex Guidance may refer to non-contradictory complementary information.

(4) The effects of previous applications of loading may generally be ignored, and a monotonic increase of the intensity of actions may be assumed.

5.6.2 Plastic analysis for beams, frames and slabs

(1)P Plastic analysis without any direct check of rotation capacity may be used for the ultimate limit state if the conditions of 5.6.1 (2)P are met.

(2) The required ductility may be deemed to be satisfied without explicit verification if all the following are fulfilled:

i) the area of tensile reinforcement is limited such that, at any section
   $x_u/d \leq 0{,}25$ for concrete strength classes ≤ C50/60
   $x_u/d \leq 0{,}15$ for concrete strength classes ≥ C55/67
ii) reinforcing steel is either Class B or C
iii) the ratio of the moments at intermediate supports to the moments in the span should be between 0,5 and 2.

(3) Columns should be checked for the maximum plastic moments which can be transmitted by connecting members. For connections to flat slabs this moment should be included in the punching shear calculation.

(4) When plastic analysis of slabs is carried out account should be taken of any non-uniform reinforcement, corner tie down forces, and torsion at free edges.

(5) Plastic methods may be extended to non-solid slabs (ribbed, hollow, waffle slabs) if their response is similar to that of a solid slab, particularly with regard to the torsional effects.

Licensed copy:University of Wales Trinity Saint David, 12/03/2020, Uncontrolled Copy, © BSI

5.6.3 Rotation capacity

(1) The simplified procedure for continuous beams and continuous one way spanning slabs is based on the rotation capacity of beam/slab zones over a length of approximately 1,2 times the depth of section. It is assumed that these zones undergo a plastic deformation (formation of yield hinges) under the relevant combination of actions. The verification of the plastic rotation in the ultimate limit state is considered to be fulfilled, if it is shown that under the relevant combination of actions the calculated rotation, θ_s, is less than or equal to the allowable plastic rotation (see Figure 5.5).

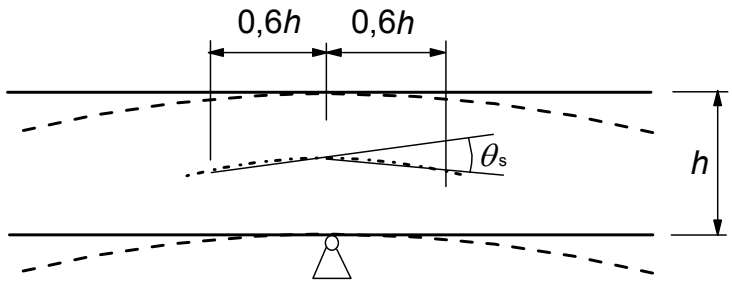

Figure 5.5: Plastic rotation θ_s of reinforced concrete sections for continuous beams and continuous one way spanning slabs.

[AC1] (2) In region of yield hinges, x_u/d should not exceed the value 0,45 for concrete strength classes less than or equal to C50/60, and 0,35 for concrete strength classes greater than or equal to C55/67. [AC1]

[AC2] (3) The rotation θ_s should be determined on the basis of the design values for actions and of mean values for materials and for prestressing at the relevant time. [AC2]

(4) In the simplified procedure, the allowable plastic rotation may be determined by multiplying the basic value of allowable rotation, $\theta_{pl,d}$, by a correction factor k_λ that depends on the shear slenderness.

Note: Values of $\theta_{pl,d}$ for use in a Country may be found in its National Annex. The recommended values for steel Classes B and C (the use of Class A steel is not recommended for plastic analysis) and concrete strength classes less than or equal to C50/60 and C90/105 are given in Figure 5.6N.

The values for concrete strength classes C 55/67 to C 90/105 may be interpolated accordingly. The values apply for a shear slenderness λ = 3,0. For different values of shear slenderness $\theta_{pl,d}$ should be multiplied by k_λ:

$$k_\lambda = \sqrt{\lambda / 3} \qquad (5.11N)$$

Where λ is the ratio of the distance between point of zero and maximum moment after redistribution and effective depth, d.

As a simplification λ may be calculated for the concordant design values of the bending moment and shear :

[AC2] $\lambda = M_{Sd} / (V_{Sd} d)$ [AC2] (5.12N)

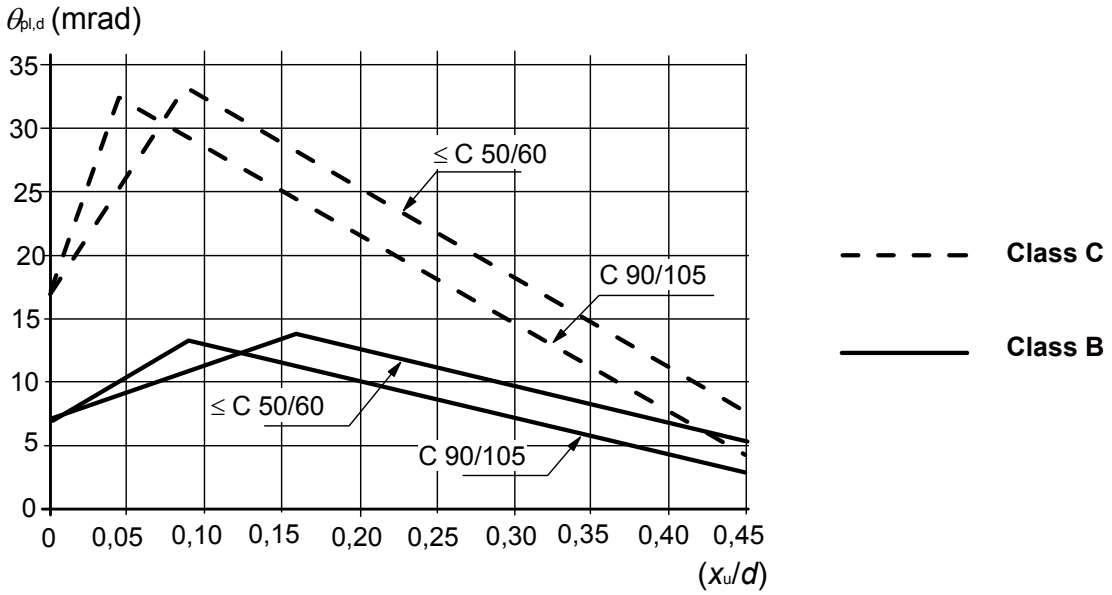

Figure 5.6N: Basic value of allowable rotation, $\theta_{pl,d}$, of reinforced concrete sections for Class B and C reinforcement. The values apply for a shear slenderness λ = 3,0

5.6.4 Analysis with strut and tie models

(1) Strut and tie models may be used for design in ULS of continuity regions (cracked state of beams and slabs, see 6.1 - 6.4) and for the design in ULS and detailing of discontinuity regions (see 6.5). In general these extend up to a distance *h* (section depth of member) from the discontinuity. Strut and tie models may also be used for members where a linear distribution within the cross section is assumed, e.g. plane strain.

(2) Verifications in SLS may also be carried out using strut-and-tie models, e.g. verification of steel stresses and crack width control, if approximate compatibility for strut-and-tie models is ensured (in particular the position and direction of important struts should be oriented according to linear elasticity theory)

(3) Strut-and-tie models consist of struts representing compressive stress fields, of ties representing the reinforcement, and of the connecting nodes. The forces in the elements of a strut-and-tie model should be determined by maintaining the equilibrium with the applied loads in the ultimate limit state. The elements of strut-and-tie models should be dimensioned according to the rules given in 6.5.

(4) The ties of a strut-and-tie model should coincide in position and direction with the corresponding reinforcement.

(5) Possible means for developing suitable strut-and-tie models include the adoption of stress trajectories and distributions from linear-elastic theory or the load path method. All strut-and-tie models may be optimised by energy criteria.

5.7 Non-linear analysis

(1) Non-linear methods of analysis may be used for both ULS and SLS, provided that equilibrium and compatibility are satisfied and an adequate non-linear behaviour for materials is assumed. The analysis may be first or second order.

Licensed copy:University of Wales Trinity Saint David, 12/03/2020, Uncontrolled Copy, © BSI

Licensed copy:University of Wales Trinity Saint David, 12/03/2020, Uncontrolled Copy, © BSI

(2) At the ultimate limit state, the ability of local critical sections to withstand any inelastic deformations implied by the analysis should be checked, taking appropriate account of uncertainties.

(3) For structures predominantly subjected to static loads, the effects of previous applications of loading may generally be ignored, and a monotonic increase of the intensity of the actions may be assumed.

(4)P The use of material characteristics which represent the stiffness in a realistic way but take account of the uncertainties of failure shall be used when using non-linear analysis. Only those design formats which are valid within the relevant fields of application shall be used.

(5) For slender structures, in which second order effects cannot be ignored, the design method given in 5.8.6 may be used.

5.8 Analysis of second order effects with axial load

5.8.1 Definitions

Biaxial bending: simultaneous bending about two principal axes

Braced members or systems: structural members or subsystems, which in analysis and design are assumed *not* to contribute to the overall horizontal stability of a structure

Bracing members or systems: structural members or subsystems, which in analysis and design are assumed to contribute to the overall horizontal stability of a structure

Buckling: failure due to instability of a member or structure under perfectly axial compression and without transverse load

Note. "Pure buckling" as defined above is not a relevant limit state in real structures, due to imperfections and transverse loads, but a nominal buckling load can be used as a parameter in some methods for second order analysis.

Buckling load: the load at which buckling occurs; for isolated elastic members it is synonymous with the Euler load

Effective length: a length used to account for the shape of the deflection curve; it can also be defined as buckling length, i.e. the length of a pin-ended column with constant normal force, having the same cross section and buckling load as the actual member

First order effects: action effects calculated without consideration of the effect of structural deformations, but including geometric imperfections

Isolated members: members that *are* isolated, or members in a structure that for design purposes may be treated as being isolated; examples of isolated members with different boundary conditions are shown in Figure 5.7.

Nominal second order moment: a second order moment used in certain design methods, giving a total moment compatible with the ultimate cross section resistance (see 5.8.5 (2))

Second order effects: additional action effects caused by structural deformations

Licensed copy:University of Wales Trinity Saint David, 12/03/2020, Uncontrolled Copy, © BSI

5.8.2 General

(1)P This clause deals with members and structures in which the structural behaviour is significantly influenced by second order effects (e.g. columns, walls, piles, arches and shells). Global second order effects are likely to occur in structures with a flexible bracing system.

(2)P Where second order effects are taken into account, see (6), equilibrium and resistance shall be verified in the deformed state. Deformations shall be calculated taking into account the relevant effects of cracking, non-linear material properties and creep.

Note. In an analysis assuming linear material properties, this can be taken into account by means of reduced stiffness values, see 5.8.7.

(3)P Where relevant, analysis shall include the effect of flexibility of adjacent members and foundations (soil-structure interaction).

(4)P The structural behaviour shall be considered in the direction in which deformations can occur, and biaxial bending shall be taken into account when necessary.

(5)P Uncertainties in geometry and position of axial loads shall be taken into account as additional first order effects based on geometric imperfections, see 5.2.

(6) Second order effects may be ignored if they are less than 10 % of the corresponding first order effects. Simplified criteria are given for isolated members in 5.8.3.1 and for structures in 5.8.3.3.

5.8.3 Simplified criteria for second order effects

5.8.3.1 Slenderness criterion for isolated members

(1) As an alternative to 5.8.2 (6), second order effects may be ignored if the slenderness λ (as defined in 5.8.3.2) is below a certain value λ_{lim}.

Note: The value of λ_{lim} for use in a Country may be found in its National Annex. The recommended value follows from:

$$\lambda_{lim} = 20 \cdot A \cdot B \cdot C / \sqrt{n} \qquad (5.13N)$$

where:

A = 1 / (1+0,2φ_{ef}) (if φ_{ef} is not known, A = 0,7 may be used)

B = $\sqrt{1+2\omega}$ (if ω is not known, B = 1,1 may be used)

C = 1,7 - r_m (if r_m is not known, C = 0,7 may be used)

φ_{ef} effective creep ratio; see 5.8.4;

ω = $A_s f_{yd}$ / ($A_c f_{cd}$); mechanical reinforcement ratio;

A_s is the total area of longitudinal reinforcement

n = N_{Ed} / ($A_c f_{cd}$); relative normal force

r_m = M_{01}/M_{02}; moment ratio

M_{01}, M_{02} are the first order end moments, $|M_{02}| \geq |M_{01}|$

If the end moments M_{01} and M_{02} give tension on the same side, r_m should be taken positive (i.e. $C \leq 1,7$), otherwise negative (i.e. $C > 1,7$).

In the following cases, r_m should be taken as 1,0 (i.e. C = 0,7):

- for braced members in which the first order moments arise only from or predominantly due to imperfections or transverse loading
- for unbraced members in general

Licensed copy:University of Wales Trinity Saint David, 12/03/2020, Uncontrolled Copy, © BSI

(2) In cases with biaxial bending, the slenderness criterion may be checked separately for each direction. Depending on the outcome of this check, second order effects (a) may be ignored in both directions, (b) should be taken into account in one direction, or (c) should be taken into account in both directions.

5.8.3.2 Slenderness and effective length of isolated members

(1) The slenderness ratio is defined as follows:

$$\lambda = l_0 / i \tag{5.14}$$

where:

l_0 is the effective length, see 5.8.3.2 (2) to (7)

i is the radius of gyration of the uncracked concrete section

(2) For a general definition of the effective length, see 5.8.1. Examples of effective length for isolated members with constant cross section are given in Figure 5.7.

AC2

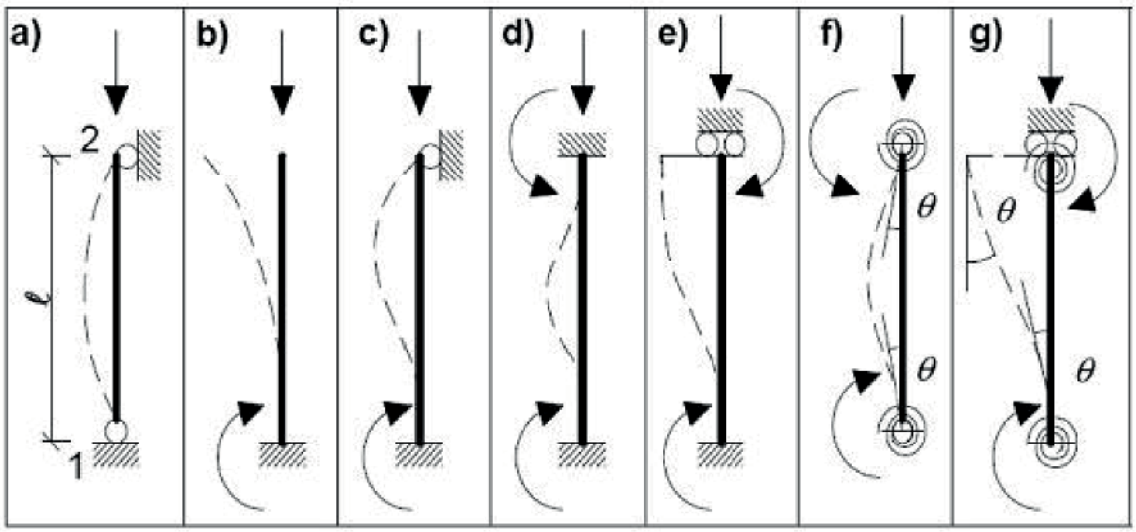

a) $l_0 = l$ b) $l_0 = 2l$ c) $l_0 = 0{,}7l$ d) $l_0 = l / 2$ e) $l_0 = l$ f) $l/2 < l_0 < l$ g) $l_0 > 2l$

AC2

Figure 5.7: Examples of different buckling modes and corresponding effective lengths for isolated members

(3) For compression members in regular frames, the slenderness criterion (see 5.8.3.1) should be checked with an effective length l_0 determined in the following way:

Braced members (see Figure 5.7 (f)):

$$l_0 = 0{,}5l \cdot \sqrt{\left(1 + \frac{k_1}{0{,}45 + k_1}\right) \cdot \left(1 + \frac{k_2}{0{,}45 + k_2}\right)} \tag{5.15}$$

Unbraced members (see Figure 5.7 (g)):

$$l_0 = l \cdot \max\left\{ \sqrt{1 + 10 \cdot \frac{k_1 \cdot k_2}{k_1 + k_2}} \; ; \; \left(1 + \frac{k_1}{1 + k_1}\right) \cdot \left(1 + \frac{k_2}{1 + k_2}\right) \right\} \tag{5.16}$$

where:

k_1, k_2 are the relative flexibilities of rotational restraints at ends 1 and 2 respectively:

k = $(\theta / M) \cdot (EI / l)$
θ is the rotation of restraining members for bending moment M; see also Figure 5.7 (f) and (g)
EI is the bending stiffness of compression member, see also 5.8.3.2 (4) and (5)
l is the clear height of compression member between end restraints

Note: k = 0 is the theoretical limit for rigid rotational restraint, and $k = \infty$ represents the limit for no restraint at all. Since fully rigid restraint is rare in practise, a minimum value of 0,1 is recommended for k_1 and k_2.

(4) If an adjacent compression member (column) in a node is likely to contribute to the rotation at buckling, then (EI/l) in the definition of k should be replaced by $[(EI / l)_a+(EI / l)_b]$, a and b representing the compression member (column) above and below the node.

(5) In the definition of effective lengths, the stiffness of restraining members should include the effect of cracking, unless they can be shown to be uncracked in ULS.

(6) For other cases than those in (2) and (3), e.g. members with varying normal force and/or cross section, the criterion in 5.8.3.1 should be checked with an effective length based on the buckling load (calculated e.g. by a numerical method):

$$l_0 = \pi\sqrt{EI / N_B} \tag{5.17}$$

where:
EI is a representative bending stiffness
N_B is buckling load expressed in terms of this EI
(in Expression (5.14), i should also correspond to this EI)

(7) The restraining effect of transverse walls may be allowed for in the calculation of the effective length of walls by the factor β given in 12.6.5.1. In Expression (12.9) and Table 12.1, l_w is then substituted by l_0 determined according to 5.8.3.2.

5.8.3.3 Global second order effects in buildings

(1) As an alternative to 5.8.2 (6), global second order effects in buildings may be ignored if

$$F_{V,Ed} \leq k_1 \cdot \frac{n_s}{n_s + 1,6} \cdot \frac{\sum E_{cd} I_c}{L^2} \tag{5.18}$$

where:
$F_{V,Ed}$ is the total vertical load (on braced *and* bracing members)
n_s is the number of storeys
L is the total height of building above level of moment restraint
E_{cd} is the design value of the modulus of elasticity of concrete, see 5.8.6 (3)
I_c is the second moment of area (uncracked concrete section) of bracing member(s)

Note: The value of k_1 for use in a Country may be found in its National Annex. The recommended value is 0,31.

Expression (5.18) is valid only if all the following conditions are met:
- torsional instability is not governing, i.e. structure is reasonably symmetrical
- global shear deformations are negligible (as in a bracing system mainly consisting of shear walls without large openings)
- bracing members are rigidly fixed at the base, i.e. rotations are negligible

Licensed copy:University of Wales Trinity Saint David, 12/03/2020, Uncontrolled Copy, © BSI

Licensed copy:University of Wales Trinity Saint David, 12/03/2020, Uncontrolled Copy, © BSI

- the stiffness of bracing members is reasonably constant along the height
- the total vertical load increases by approximately the same amount per storey

(2) k_1 in Expression (5.18) may be replaced by k_2 if it can be verified that bracing members are uncracked in ultimate limit state.

Note 1: The value of k_2 for use in a Country may be found in its National Annex. The recommended value is 0,62.

Note 2: For cases where the bracing system has significant global shear deformations and/or end rotations, see Annex H (which also gives the background to the above rules).

5.8.4 Creep

(1)P The effect of creep shall be taken into account in second order analysis, with due consideration of both the general conditions for creep (see 3.1.4) and the duration of different loads in the load combination considered.

(2) The duration of loads may be taken into account in a simplified way by means of an effective creep ratio, φ_{ef}, which, used together with the design load, gives a creep deformation (curvature) corresponding to the quasi-permanent load:

$$\varphi_{ef} = \varphi_{(\infty,t0)} \cdot M_{0Eqp} / M_{0Ed} \tag{5.19}$$

where:

$\varphi_{(\infty,t0)}$ is the final creep coefficient according to 3.1.4
M_{0Eqp} is the first order bending moment in quasi-permanent load combination (SLS)
M_{0Ed} is the first order bending moment in design load combination (ULS)

Note. It is also possible to base φ_{ef} on total bending moments M_{Eqp} and M_{Ed}, but this requires iteration and a verification of stability under quasi-permanent load with $\varphi_{ef} = \varphi_{(\infty,t0)}$.

(3) If M_{0Eqp} / M_{0Ed} varies in a member or structure, the ratio may be calculated for the section with maximum moment, or a representative mean value may be used.

(4) The effect of creep may be ignored, i.e. $\varphi_{ef} = 0$ may be assumed, if the following three conditions are met:

- $\varphi_{(\infty,t0)} \leq 2$
- $\lambda \leq 75$
- $M_{0Ed}/N_{Ed} \geq h$

Here M_{0Ed} is the first order moment and h is the cross section depth in the corresponding direction.

Note. If the conditions for neglecting second order effects according to 5.8.2 (6) or 5.8.3.3 are only just achieved, it may be too unconservative to neglect both second order effects and creep, unless the mechanical reinforcement ratio (ω, see 5.8.3.1 (1)) is at least 0,25.

5.8.5 Methods of analysis

(1) The methods of analysis include a general method, based on non-linear second order analysis, see 5.8.6 and the following two simplified methods:

(a) Method based on nominal stiffness, see 5.8.7
(b) Method based on nominal curvature, see 5.8.8

Licensed copy:University of Wales Trinity Saint David, 12/03/2020, Uncontrolled Copy, © BSI

Note 1: The selection of Simplified Method (a) and (b) to be used in a Country may be found in its National Annex.

Note 2: Nominal second order moments provided by the simplified methods (a) and (b) are sometimes greater than those corresponding to instability. This is to ensure that the total moment is compatible with the cross section resistance.

(2) Method (a) may be used for both isolated members and whole structures, if nominal stiffness values are estimated appropriately; see 5.8.7.

(3) Method (b) is mainly suitable for isolated members; see 5.8.8. However, with realistic assumptions concerning the distribution of curvature, the method in 5.8.8 can also be used for structures.

5.8.6 General method

(1)P The general method is based on non-linear analysis, including geometric non-linearity i.e. second order effects. The general rules for non-linear analysis given in 5.7 apply.

(2)P Stress-strain curves for concrete and steel suitable for overall analysis shall be used. The effect of creep shall be taken into account.

AC1 (3) Stress-strain relationships for concrete and steel given in 3.1.5, Expressions (3.14) and 3.2.7 (Figure 3.8) may be used. With stress-strain diagrams based on design values, a design value of the ultimate load is obtained directly from the analysis. In Expression (3.14), and in the *k*-value, f_{cm} is then substituted by the design compressive strength f_{cd} and E_{cm} is substituted by

$$E_{cd} = E_{cm} / \gamma_{CE} \tag{5.20}$$

Note: The value of γ_{CE} for use in a Country may be found in its National Annex. The recommended value is 1,2. AC1

(4) In the absence of more refined models, creep may be taken into account by multiplying all strain values in the concrete stress-strain diagram according to 5.8.6 (3) with a factor $(1 + \varphi_{ef})$, where φ_{ef} is the effective creep ratio according to 5.8.4.

(5) The favourable effect of tension stiffening may be taken into account.

Note: This effect is favourable, and may always be ignored, for simplicity.

(6) Normally, conditions of equilibrium and strain compatibility are satisfied in a number of cross sections. A simplified alternative is to consider only the critical cross section(s), and to assume a relevant variation of the curvature in between, e.g. similar to the first order moment or simplified in another appropriate way.

5.8.7 Method based on nominal stiffness

5.8.7.1 General

(1) In a second order analysis based on stiffness, nominal values of the flexural stiffness should be used, taking into account the effects of cracking, material non-linearity and creep on the overall behaviour. This also applies to adjacent members involved in the analysis, e.g. beams, slabs or foundations. Where relevant, soil-structure interaction should be taken into account.

(2) The resulting design moment is used for the design of cross sections with respect to ⟦AC1⟩bending moment and axial force according to 6.1, as compared with 5.8.5 (1).⟨AC1⟧

5.8.7.2 Nominal stiffness

(1) The following model may be used to estimate the nominal stiffness of slender compression members with arbitrary cross section:

$$EI = K_c E_{cd} I_c + K_s E_s I_s \tag{5.21}$$

where:

- E_{cd} is the design value of the modulus of elasticity of concrete, see 5.8.6 (3)
- I_c is the moment of inertia of concrete cross section
- E_s is the design value of the modulus of elasticity of reinforcement, 5.8.6 (3)
- I_s is the second moment of area of reinforcement, about the centre of area of the concrete
- K_c is a factor for effects of cracking, creep etc, see 5.8.7.2 (2) or (3)
- K_s is a factor for contribution of reinforcement, see 5.8.7.2 (2) or (3)

(2) The following factors may be used in Expression (5.21), provided $\rho \geq 0{,}002$:

$$K_s = 1$$
$$K_c = k_1 k_2 / (1 + \varphi_{ef}) \tag{5.22}$$

where:

- ρ is the geometric reinforcement ratio, A_s/A_c
- A_s is the total area of reinforcement
- A_c is the area of concrete section
- φ_{ef} is the effective creep ratio, see 5.8.4
- k_1 is a factor which depends on concrete strength class, Expression (5.23)
- k_2 is a factor which depends on axial force and slenderness, Expression (5.24)

$$k_1 = \sqrt{f_{ck} / 20} \text{ (MPa)} \tag{5.23}$$

$$k_2 = n \cdot \frac{\lambda}{170} \leq 0{,}20 \tag{5.24}$$

where:

- n is the relative axial force, $N_{Ed} / (A_c f_{cd})$
- λ is the slenderness ratio, see 5.8.3

If the slenderness ratio λ is not defined, k_2 may be taken as

$$k_2 = n \cdot 0{,}30 \leq 0{,}20 \tag{5.25}$$

(3) As a simplified alternative, provided $\rho \geq 0{,}01$, the following factors may be used in Expression (5.21):

$$K_s = 0$$
$$K_c = 0{,}3 / (1 + 0{,}5\varphi_{ef}) \tag{5.26}$$

Note. The simplified alternative may be suitable as a preliminary step, followed by a more accurate calculation according to (2).

Licensed copy:University of Wales Trinity Saint David, 12/03/2020, Uncontrolled Copy, © BSI

Licensed copy:University of Wales Trinity Saint David, 12/03/2020, Uncontrolled Copy, © BSI

(4) In statically indeterminate structures, unfavourable effects of cracking in adjacent members should be taken into account. Expressions (5.21-5.26) are not generally applicable to such members. Partial cracking and tension stiffening may be taken into account e.g. according to 7.4.3. However, as a simplification, fully cracked sections may be assumed. The stiffness should be based on an effective concrete modulus:

$$E_{cd,eff} = E_{cd}/(1+\varphi_{ef}) \tag{5.27}$$

where:

E_{cd} is the design value of the modulus of elasticity according to 5.8.6 (3)

φ_{ef} is the effective creep ratio; same value as for columns may be used

5.8.7.3 Moment magnification factor

(1) The total design moment, including second order moment, may be expressed as a ⟦AC1⟩ magnification of the bending moments resulting from a first order analysis, namely: ⟨AC1⟧

$$M_{Ed} = M_{0Ed}\left[1+\frac{\beta}{(N_B/N_{Ed})-1}\right] \tag{5.28}$$

where:

M_{0Ed} is the first order moment; see also 5.8.8.2 (2)

β is a factor which depends on distribution of 1st and 2nd order moments, see 5.8.7.3 (2)-(3)

N_{Ed} is the design value of axial load

N_B is the buckling load based on nominal stiffness

(2) For isolated members with constant cross section and axial load, the second order moment may normally be assumed to have a sine-shaped distribution. Then

$$\beta = \pi^2 / c_0 \tag{5.29}$$

where:

c_0 is a coefficient which depends on the distribution of first order moment (for instance, c_0 = 8 for a constant first order moment, c_0 = 9,6 for a parabolic and 12 for a symmetric triangular distribution etc.).

(3) For members without transverse load, differing first order end moments M_{01} and M_{02} may be replaced by an equivalent constant first order moment M_{0e} according to 5.8.8.2 (2). Consistent with the assumption of a constant first order moment, c_0 = 8 should be used.

Note: The value of c_0 = 8 also applies to members bent in double curvature. It should be noted that in some cases, depending on slenderness and axial force, the end moments(s) can be greater than the magnified equivalent moment

(4) Where 5.8.7.3 (2) or (3) is not applicable, β = 1 is normally a reasonable simplification. Expression (5.28) can then be reduced to:

$$M_{Ed} = \frac{M_{0Ed}}{1-(N_{Ed}/N_B)} \tag{5.30}$$

Licensed copy:University of Wales Trinity Saint David, 12/03/2020, Uncontrolled Copy, © BSI

Note: 5.8.7.3 (4) is also applicable to the global analysis of certain types of structures, e.g. structures braced by shear walls and similar, where the principal action effect is bending moment in bracing units. For other types of structures, a more general approach is given in Annex H, Clause H.2.

5.8.8 Method based on nominal curvature

5.8.8.1 General

(1) This method is primarily suitable for isolated members with constant normal force and a defined effective length l_0 (see 5.8.3.2). The method gives a nominal second order moment based on a deflection, which in turn is based on the effective length and an estimated maximum ⟦AC1⟩ curvature (see also 5.8.5 (3)). ⟨AC1⟧

(2) The resulting design moment is used for the design of cross sections with respect to bending moment and axial force according to 6.1.

5.8.8.2 Bending moments

(1) The design moment is:

$$M_{Ed} = M_{0Ed} + M_2 \tag{5.31}$$

where:

M_{0Ed} is the 1st order moment, including the effect of imperfections, see also 5.8.8.2 (2)
M_2 is the nominal 2nd order moment, see 5.8.8.2 (3)

The maximum value of M_{Ed} is given by the distributions of M_{0Ed} and M_2; the latter may be taken as parabolic or sinusoidal over the effective length.

Note: For statically indeterminate members, M_{0Ed} is determined for the actual boundary conditions, whereas M_2 will depend on boundary conditions via the effective length, cf. 5.8.8.1 (1).

⟦AC1⟩ (2) For members without loads applied between their ends, differing first order end moments M_{01} and M_{02} may be replaced by an equivalent first order end moment M_{0e} : ⟨AC1⟧

$$M_{0e} = 0{,}6\, M_{02} + 0{,}4\, M_{01} \quad \geq 0{,}4\, M_{02} \tag{5.32}$$

M_{01} and M_{02} should have the same sign if they give tension on the same side, otherwise opposite signs. Furthermore, $|M_{02}| \geq |M_{01}|$.

(3) The nominal second order moment M_2 in Expression (5.31) is

$$M_2 = N_{Ed}\, e_2 \tag{5.33}$$

where:

N_{Ed} is the design value of axial force
e_2 is the deflection = $(1/r)\, l_o^2 / c$
$1/r$ is the curvature, see 5.8.8.3
l_o is the effective length, see 5.8.3.2
c is a factor depending on the curvature distribution, see 5.8.8.2 (4)

(4) For constant cross section, $c = 10$ ($\approx \pi^2$) is normally used. If the first order moment is constant, a lower value should be considered (8 is a lower limit, corresponding to constant total moment).

Licensed copy:University of Wales Trinity Saint David, 12/03/2020, Uncontrolled Copy, © BSI

Note. The value π^2 corresponds to a sinusoidal curvature distribution. The value for constant curvature is 8. Note that c depends on the distribution of the *total* curvature, whereas c_0 in 5.8.7.3 (2) depends on the curvature corresponding to the first order moment only.

5.8.8.3 Curvature

(1) For members with constant symmetrical cross sections (incl. reinforcement), the following may be used:

$$1/r = K_r \cdot K_\varphi \cdot 1/r_0 \tag{5.34}$$

where:

K_r is a correction factor depending on axial load, see 5.8.8.3 (3)
K_φ is a factor for taking account of creep, see 5.8.8.3 (4)
$1/r_0 = \varepsilon_{yd} / (0{,}45\, d)$
$\varepsilon_{yd} = f_{yd} / E_s$
d is the effective depth; see also 5.8.8.3 (2)

(2) If all reinforcement is not concentrated on opposite sides, but part of it is distributed parallel to the plane of bending, d is defined as

$$d = (h/2) + i_s \tag{5.35}$$

where i_s is the radius of gyration of the total reinforcement area

(3) K_r in Expression (5.34) should be taken as:

$$K_r = (n_u - n) / (n_u - n_{bal}) \leq 1 \tag{5.36}$$

where:

n $= N_{Ed} / (A_c\, f_{cd})$, relative axial force
N_{Ed} is the design value of axial force
n_u $= 1 + \omega$
n_{bal} is the value of n at maximum moment resistance; the value 0,4 may be used
ω $= A_s\, f_{yd} / (A_c\, f_{cd})$
A_s is the total area of reinforcement
A_c is the area of concrete cross section

(4) The effect of creep should be taken into account by the following factor:

$$K_\varphi = 1 + \beta\varphi_{ef} \geq 1 \tag{5.37}$$

where:

φ_{ef} is the effective creep ratio, see 5.8.4
β $= 0{,}35 + f_{ck}/200 - \lambda/150$
AC2 λ is the slenderness ratio, see 5.8.3.2 AC2

5.8.9 Biaxial bending

(1) The general method described in 5.8.6 may also be used for biaxial bending. The following provisions apply when simplified methods are used. Special care should be taken to identify the section along the member with the critical combination of moments.

Licensed copy:University of Wales Trinity Saint David, 12/03/2020, Uncontrolled Copy, © BSI

(2) Separate design in each principal direction, disregarding biaxial bending, may be made as a first step. Imperfections need to be taken into account only in the direction where they will have the most unfavourable effect.

(3) No further check is necessary if the slenderness ratios satisfy the following two conditions

$$\lambda_y/\lambda_z \leq 2 \quad \text{and} \quad \lambda_z/\lambda_y \leq 2 \tag{5.38a}$$

AC1 and if the relative eccentricities e_y/h_{eq} and e_z/b_{eq} (see Figure 5.8) satisfy one the following AC1 conditions:

$$\frac{e_y / h_{eq}}{e_z / b_{eq}} \leq 0{,}2 \quad \text{or} \quad \frac{e_z / b_{eq}}{e_y / h_{eq}} \leq 0{,}2 \tag{5.38b}$$

where:

b, h are the width and depth of the section

$b_{eq} = i_y \cdot \sqrt{12}$ and $h_{eq} = i_z \cdot \sqrt{12}$ for an equivalent rectangular section

λ_y, λ_z are the slenderness ratios l_0/i with respect to y- and z-axis respectively

i_y, i_z are the radii of gyration with respect to y- and z-axis respectively

e_z $= M_{Edy} / N_{Ed}$; eccentricity along z-axis

e_y $= M_{Edz} / N_{Ed}$; eccentricity along y-axis

M_{Edy} is the design moment about y-axis, including second order moment

M_{Edz} is the design moment about z-axis, including second order moment

N_{Ed} is the design value of axial load in the respective load combination

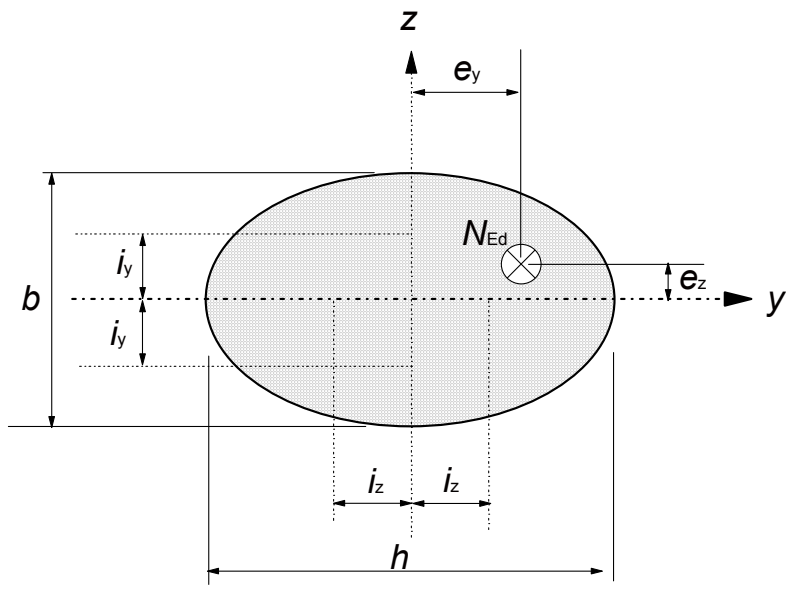

Figure 5.8. Definition of eccentricities e_y and e_z.

(4) If the condition of Expression (5.38) is not fulfilled, biaxial bending should be taken into account including the 2nd order effects in each direction (unless they may be ignored according to 5.8.2 (6) or 5.8.3). In the absence of an accurate cross section design for biaxial bending, the following simplified criterion may be used:

$$\left(\frac{M_{Edz}}{M_{Rdz}}\right)^a + \left(\frac{M_{Edy}}{M_{Rdy}}\right)^a \leq 1{,}0 \tag{5.39}$$

Licensed copy:University of Wales Trinity Saint David, 12/03/2020, Uncontrolled Copy, © BSI

where:

$M_{Edz/y}$ is the design moment around the respective axis, including a 2nd order moment.

$M_{Rdz/y}$ is the moment resistance in the respective direction

a is the exponent;

for circular and elliptical cross sections: $a = 2$

for rectangular cross sections:

N_{Ed}/N_{Rd}	0,1	0,7	1,0
a =	1,0	1,5	2,0

with linear interpolation for intermediate values

N_{Ed} is the design value of axial force

N_{Rd} $= A_c f_{cd} + A_s f_{yd}$, design axial resistance of section.

where:

A_c is the gross area of the concrete section

A_s is the area of longitudinal reinforcement

5.9 Lateral instability of slender beams

(1)P Lateral instability of slender beams shall be taken into account where necessary, e.g. for precast beams during transport and erection, for beams without sufficient lateral bracing in the finished structure etc. Geometric imperfections shall be taken into account.

(2) A lateral deflection of l / 300 should be assumed as a geometric imperfection in the verification of beams in unbraced conditions, with l = total length of beam. In finished structures, bracing from connected members may be taken into account

(3) Second order effects in connection with lateral instability may be ignored if the following conditions are fulfilled:

- persistent situations: $\frac{l_{0t}}{b} \leq \frac{50}{(h/b)^{1/3}}$ and $h/b \leq 2{,}5$ (5.40a)

- transient situations: $\frac{l_{0t}}{b} \leq \frac{70}{(h/b)^{1/3}}$ and $h/b \leq 3{,}5$ (5.40b)

where:

l_{0t} is the distance between torsional restraints

h is the total depth of beam in central part of l_{0t}

b is the width of compression flange

(4) Torsion associated with lateral instability should be taken into account in the design of supporting structures.

5.10 Prestressed members and structures

5.10.1 General

(1)P The prestress considered in this Standard is that applied to the concrete by stressed tendons.

(2) The effects of prestressing may be considered as an action or a resistance caused by prestrain and precurvature. The bearing capacity should be calculated accordingly.

Licensed copy:University of Wales Trinity Saint David, 12/03/2020, Uncontrolled Copy, © BSI

(3) In general prestress is introduced in the action combinations defined in EN 1990 as part of the loading cases and its effects should be included in the applied internal moment and axial force.

(4) Following the assumptions of (3) above, the contribution of the prestressing tendons to the resistance of the section should be limited to their additional strength beyond prestressing. This may be calculated assuming that the origin of the stress/strain relationship of the tendons is displaced by the effects of prestressing.

(5)P Brittle failure of the member caused by failure of prestressing tendons shall be avoided.

(6) Brittle failure should be avoided by one or more of the following methods:

Method A: Provide minimum reinforcement in accordance with 9.2.1.

Method B: Provide pretensioned bonded tendons.

Method C: Provide easy access to prestressed concrete members in order to check and control the condition of tendons by non-destructive methods or by monitoring.

Method D: Provide satisfactory evidence concerning the reliability of the tendons.

Method E: Ensure that if failure were to occur due to either an increase of load or a reduction of prestress under the frequent combination of actions, cracking would occur before the ultimate capacity would be exceeded, taking account of moment redistribution due to cracking effects.

Note: The selection of Methods to be used in a Country may be found in its National Annex.

5.10.2 Prestressing force during tensioning

5.10.2.1 Maximum stressing force

(1)P The force applied to a tendon, P_{max} (i.e. the force at the active end during tensioning) shall not exceed the following value:

$$P_{max} = A_p \cdot \sigma_{p,max} \tag{5.41}$$

where:

A_p is the cross-sectional area of the tendon

$\sigma_{p,max}$ is the maximum stress applied to the tendon
$= \min \{ k_1 \cdot f_{pk} ; k_2 \cdot f_{p0,1k} \}$

Note: The values of k_1 and k_2 for use in a Country may be found in its National Annex. The recommended values are $k_1 = 0{,}8$ and $k_2 = 0{,}9$

(2) Overstressing is permitted if the force in the jack can be measured to an accuracy of ± 5 % of the final value of the prestressing force. In such cases the maximum prestressing force P_{max} [AC1⟩ may be increased to $k_3 \cdot f_{p0,1k} \cdot A_p$ (e.g. for the occurrence of an unexpected high friction in ⟨AC1] long-line pretensioning).

Note: The values of k_3 for use in a Country may be found in its National Annex. The recommended value is 0,95.

Licensed copy:University of Wales Trinity Saint David, 12/03/2020, Uncontrolled Copy, © BSI

5.10.2.2 Limitation of concrete stress

(1)P Local concrete crushing or splitting at the end of pre- and post-tensioned members shall be avoided.

(2) Local concrete crushing or splitting behind post-tensioning anchors should be avoided in accordance with the relevant European Technical Approval.

(3) The strength of concrete at application of or transfer of prestress should not be less than the minimum value defined in the relevant European Technical Approval.

(4) If prestress in an individual tendon is applied in steps, the required concrete strength may be reduced. The minimum strength $f_{cm}(t)$ at the time t should be k_4 [%] of the required concrete strength for full prestressing given in the European Technical Approval. Between the minimum strength and the required concrete strength for full prestressing, the prestress may be interpolated between k_5 [%] and 100% of the full prestressing.

Note: The values of k_4 and k_5 for use in a Country may be found in its National Annex. The recommended value for k_4 is 50 and for k_5 is 30.

(5) The concrete compressive stress in the structure resulting from the prestressing force and other loads acting at the time of tensioning or release of prestress, should be limited to:

$$\sigma_c \leq 0{,}6\, f_{ck}(t) \tag{5.42}$$

where $f_{ck}(t)$ is the characteristic compressive strength of the concrete at time t when it is subjected to the prestressing force.

For pretensioned elements the stress at the time of transfer of prestress may be increased to $k_6 \cdot f_{ck}(t)$, if it can be justified by tests or experience that longitudinal cracking is prevented.

Note: The value of k_6 for use in a Country may be found in its National Annex. The recommended value is 0,7.

If the compressive stress permanently exceeds 0,45 $f_{ck}(t)$ the non-linearity of creep should be taken into account.

5.10.2.3 Measurements

(1)P In post-tensioning the prestressing force and the related elongation of the tendon shall be checked by measurements and the actual losses due to friction shall be controlled.

5.10.3 Prestress force

(1)P At a given time t and distance x (or arc length) from the active end of the tendon the mean prestress force $P_{m,t}(x)$ is equal to the maximum force P_{max} imposed at the active end, minus the immediate losses and the time dependent losses (see below). Absolute values are considered for all the losses.

(2) The value of the initial prestress force $P_{m0}(x)$ (at time $t = t0$) applied to the concrete immediately after tensioning and anchoring (post-tensioning) or after transfer of prestressing (pre-tensioning) is obtained by subtracting from the force at tensioning P_{max} the immediate losses $\Delta P_i(x)$ and should not exceed the following value:

$$P_{m0}(x) = A_p \cdot \sigma_{pm0}(x) \tag{5.43}$$

where:

$\sigma_{pm0}(x)$ is the stress in the tendon immediately after tensioning or transfer
$= \min \{ k_7 \cdot f_{pk} ; k_8 f_{p0,1k} \}$

Note: The values of k_7 and k_8 for use in a Country may be found in its National Annex. The recommended value for k_7 is 0,75 and for k_8 is 0,85

(3) When determining the immediate losses $\Delta P_i(x)$ the following immediate influences should be considered for pre-tensioning and post-tensioning where relevant (see 5.10.4 and 5.10.5):

- losses due to elastic deformation of concrete ΔP_{el}
- losses due to short term relaxation ΔP_r
- losses due to friction $\Delta P_\mu(x)$
- losses due to anchorage slip ΔP_{sl}

(4) The mean value of the prestress force $P_{m,t}(x)$ at the time $t > t0$ should be determined with respect to the prestressing method. In addition to the immediate losses given in (3) the time-dependent losses of prestress $\Delta P_{c+s+r}(x)$ (see 5.10.6) as a result of creep and shrinkage of the concrete and the long term relaxation of the prestressing steel should be considered and $P_{m,t}(x) = P_{m0}(x) - \Delta P_{c+s+r}(x)$.

5.10.4 Immediate losses of prestress for pre-tensioning

(1) The following losses occurring during pre-tensioning should be considered:

(i) during the stressing process: loss due to friction at the bends (in the case of curved wires or strands) and losses due to wedge draw-in of the anchorage devices.

(ii) before the transfer of prestress to concrete: loss due to relaxation of the pretensioning tendons during the period which elapses between the tensioning of the tendons and prestressing of the concrete.

Note: In case of heat curing, losses due to shrinkage and relaxation are modified and should be assessed accordingly; direct thermal effect should also be considered [AC1⟩ (see 10.3.2.1 and Annex D)⟨AC1]

(iii) at the transfer of prestress to concrete: loss due to elastic deformation of concrete as the result of the action of pre-tensioned tendons when they are released from the anchorages.

5.10.5 Immediate losses of prestress for post-tensioning

5.10.5.1 Losses due to the instantaneous deformation of concrete

(1) Account should be taken of the loss in tendon force corresponding to the deformation of concrete, taking account the order in which the tendons are stressed.

(2) This loss, ΔP_{el}, may be assumed as a mean loss in each tendon as follows:

$$\Delta P_{el} = A_p \cdot E_p \cdot \sum \left[\frac{j \cdot \Delta\sigma_c(t)}{E_{cm}(t)} \right] \tag{5.44}$$

where:

$\Delta\sigma_c(t)$ is the variation of stress at the centre of gravity of the tendons applied at time t

Licensed copy:University of Wales Trinity Saint David, 12/03/2020, Uncontrolled Copy, © BSI

Licensed copy:University of Wales Trinity Saint David, 12/03/2020, Uncontrolled Copy, © BSI

j is a coefficient equal to
- $(n-1)/2n$ where *n* is the number of identical tendons successively prestressed. As an approximation *j* may be taken as 1/2
- 1 for the variations due to permanent actions applied after prestressing.

5.10.5.2 Losses due to friction

(1) The losses due to friction $\Delta P_{\mu}(x)$ in post-tensioned tendons may be estimated from:

$$\Delta P_{\mu}(x) = P_{max}\,(1 - e^{-\mu(\theta + kx)}) \tag{5.45}$$

where:

- θ is the sum of the angular displacements over a distance x (irrespective of direction or sign)
- μ is the coefficient of friction between the tendon and its duct
- k is an unintentional angular displacement for internal tendons (per unit length)
- x is the distance along the tendon from the point where the prestressing force is equal to P_{max} (the force at the active end during tensioning)

The values μ and *k* are given in the relevant European Technical Approval. The value μ depends on the surface characteristics of the tendons and the duct, on the presence of rust, on the elongation of the tendon and on the tendon profile.

The value *k* for unintentional angular displacement depends on the quality of workmanship, on the distance between tendon supports, on the type of duct or sheath employed, and on the degree of vibration used in placing the concrete.

(2) In the absence of data given in a European Technical Approval the values for μ given in Table 5.1 may be assumed, when using Expression (5.45).

(3) In the absence of data in a European Technical Approval, values for unintended regular displacements for internal tendons will generally be in the range $0{,}005 < k < 0{,}01$ per metre.

(4) For external tendons, the losses of prestress due to unintentional angles may be ignored.

Table 5.1: Coefficients of friction μ of post-tensioned internal tendons and external unbonded tendons

	Internal tendons [1)]	External unbonded tendons			
		Steel duct/ non lubricated	HDPE duct/ non lubricated	Steel duct/ lubricated	HDPE duct/ lubricated
Cold drawn wire	0,17	0,25	0,14	0,18	0,12
Strand	0,19	0,24	0,12	0,16	0,10
Deformed bar	0,65	-	-	-	-
Smooth round bar	0,33	-	-	-	-
[1)] for tendons which fill about half of the duct					

AC1 **Note:** HDPE - High density polyethylene AC1

5.10.5.3 Losses at anchorage

(1) Account should be taken of the losses due to wedge draw-in of the anchorage devices, during the operation of anchoring after tensioning, and due to the deformation of the anchorage itself.

Licensed copy:University of Wales Trinity Saint David, 12/03/2020, Uncontrolled Copy, © BSI

(2) Values of the wedge draw-in are given in the European Technical Approval.

5.10.6 Time dependent losses of prestress for pre- and post-tensioning

(1) The time dependent losses may be calculated by considering the following two reductions of stress:

(a) due to the reduction of strain, caused by the deformation of concrete due to creep and shrinkage, under the permanent loads:

(b) the reduction of stress in the steel due to the relaxation under tension.

Note: The relaxation of steel depends on the concrete deformation due to creep and shrinkage. This interaction can generally and approximately be taken into account by a reduction factor 0,8.

(2) A simplified method to evaluate time dependent losses at location x under the permanent loads is given by Expression (5.46).

$$\Delta P_{c+s+r} = A_p \Delta\sigma_{p,c+s+r} = A_p \frac{\varepsilon_{cs} E_p + 0{,}8\Delta\sigma_{pr} + \dfrac{E_p}{E_{cm}} \varphi(t,t_0).\sigma_{c,QP}}{1 + \dfrac{E_p}{E_{cm}} \dfrac{A_p}{A_c}\left(1 + \dfrac{A_c}{I_c} z_{cp}^2\right)[1 + 0{,}8\,\varphi(t,t_0)]} \tag{5.46}$$

where:

$\Delta\sigma_{p,c+s+r}$ is the absolute value of the variation of stress in the tendons due to creep, shrinkage and relaxation at location x, at time t

ε_{cs} is the estimated shrinkage strain according to 3.1.4(6) in absolute value

[AC1⟩ E_p is the modulus of elasticity for the prestressing steel, see 3.3.6 (2) ⟨AC1]

E_{cm} is the modulus of elasticity for the concrete (Table 3.1)

$\Delta\sigma_{pr}$ is the absolute value of the variation of stress in the tendons at location x, at time t, due to the relaxation of the prestressing steel. It is determined for a stress of $\sigma_p = \sigma_p(G+P_{m0}+\psi_2 Q)$
where $\sigma_p = \sigma_p(G+P_{m0}+\psi_2 Q)$ is the initial stress in the tendons due to initial prestress and quasi-permanent actions.

$\varphi(t,t_0)$ is the creep coefficient at a time t and load application at time t_0

$\sigma_{c,QP}$ is the stress in the concrete adjacent to the tendons, due to self-weight and initial prestress and other quasi-permanent actions where relevant. The value of $\sigma_{c,QP}$ may be the effect of part of self-weight and initial prestress or the effect of a full quasi-permanent combination of action ($\sigma_c(G+P_{m0}+\psi_2 Q)$), depending on the stage of construction considered.

A_p is the area of all the prestressing tendons at the location x

A_c is the area of the concrete section.

I_c is the second moment of area of the concrete section.

z_{cp} is the distance between the centre of gravity of the concrete section and the tendons

Compressive stresses and the corresponding strains given in Expression (5.46) should be used with a positive sign.

(3) Expression (5.46) applies for bonded tendons when local values of stresses are used and for unbonded tendons when mean values of stresses are used. The mean values should be calculated between straight sections limited by the idealised deviation points for external tendons or along the entire length in case of internal tendons.

Licensed copy:University of Wales Trinity Saint David, 12/03/2020, Uncontrolled Copy, © BSI

5.10.7 Consideration of prestress in analysis

(1) Second order moments can arise from prestressing with external tendons.

(2) Moments from secondary effects of prestressing arise only in statically indeterminate structures.

(3) For linear analysis both the primary and secondary effects of prestressing should be applied before any redistribution of forces and moments is considered (see 5.5).

(4) In plastic and non-linear analysis the secondary effect of prestress may be treated as additional plastic rotations which should then be included in the check of rotation capacity.

(5) Rigid bond between steel and concrete may be assumed after grouting of post-tensioned tendons. However before grouting the tendons should be considered as unbonded.

(6) External tendons may be assumed to be straight between deviators.

5.10.8 Effects of prestressing at ultimate limit state

(1) In general the design value of the prestressing force may be determined by $P_{d,t}(x) = \gamma_{P,}P_{m,t}(x)$ (see 5.10.3 (4) for the definition of $P_{m,t}(x)$) and 2.4.2.2 for γ_p.

(2) For prestressed members with permanently unbonded tendons, it is generally necessary to take the deformation of the whole member into account when calculating the increase of the stress in the prestressing steel. If no detailed calculation is made, it may be assumed that the increase of the stress from the effective prestress to the stress in the ultimate limit state is $\Delta\sigma_{p,ULS}$.

Note: The value of $\Delta\sigma_{p,ULS}$ for use in a Country may be found in its National Annex. The recommended value is 100 MPa.

(3) If the stress increase is calculated using the deformation state of the whole member the mean values of the material properties should be used. The design value of the stress increase $\Delta\sigma_{pd} = \Delta\sigma_p \cdot \gamma_{\Delta P}$ should be determined by applying partial safety factors $\gamma_{\Delta P,sup}$ and $\gamma_{\Delta P,inf}$ respectively.

Note: The values of $\gamma_{\Delta P,sup}$ and $\gamma_{\Delta P,inf}$ for use in a Country may be found in its National Annex. The recommended values for $\gamma_{\Delta P,sup}$ and $\gamma_{\Delta P,inf}$ are 1,2 and 0,8 respectively. If linear analysis with uncracked sections is applied, a lower limit of deformations may be assumed and the recommended value for both $\gamma_{\Delta P,sup}$ and $\gamma_{\Delta P,inf}$ is 1,0.

5.10.9 Effects of prestressing at serviceability limit state and limit state of fatigue

(1)P For serviceability and fatigue calculations allowance shall be made for possible variations in prestress. Two characteristic values of the prestressing force at the serviceability limit state are estimated from:

$$P_{k,sup} = r_{sup}\, P_{m,t}\,(x) \tag{5.47}$$

$$P_{k,inf} = r_{inf}\, P_{m,t}(x) \tag{5.48}$$

where:

$P_{k,sup}$ is the upper characteristic value
$P_{k,inf}$ is the lower characteristic value

Note: The values of r_{sup} and r_{inf} for use in a Country may be found in its National Annex. The recommended values are:
- for pre-tensioning or unbonded tendons: r_{sup} = 1,05 and r_{inf} = 0,95
- for post-tensioning with bonded tendons: r_{sup} = 1,10 and r_{inf} = 0,90
- when appropriate measures (e.g. direct measurements of pretensioning) are taken: r_{sup} = r_{inf} = 1,0.

5.11 Analysis for some particular structural members

(1)P Slabs supported on columns are defined as flat slabs.

(2)P Shear walls are plain or reinforced concrete walls that contribute to lateral stability of the structure.

Note: For information concerning the analysis of flat slabs and shear walls see Annex I.

Licensed copy:University of Wales Trinity Saint David, 12/03/2020, Uncontrolled Copy, © BSI

Licensed copy:University of Wales Trinity Saint David, 12/03/2020, Uncontrolled Copy, © BSI

SECTION 6 ULTIMATE LIMIT STATES (ULS)

6.1 Bending with or without axial force

(1)P This section applies to undisturbed regions of beams, slabs and similar types of members for which sections remain approximately plane before and after loading. The discontinuity regions of beams and other members in which plane sections do not remain plane may be designed and detailed according to 6.5.

(2)P When determining the ultimate moment resistance of reinforced or prestressed concrete cross-sections, the following assumptions are made:

- plane sections remain plane.
- the strain in bonded reinforcement or bonded prestressing tendons, whether in tension or in compression, is the same as that in the surrounding concrete.
- the tensile strength of the concrete is ignored.
- the stresses in the concrete in compression are derived from the design stress/strain relationship given in 3.1.7.
- the stresses in the reinforcing or prestressing steel are derived from the design curves in 3.2 (Figure 3.8) and 3.3 (Figure 3.10).
- the initial strain in prestressing tendons is taken into account when assessing the stresses in the tendons.

(3)P The compressive strain in the concrete shall be limited to ε_{cu2}, or ε_{cu3}, depending on the stress-strain diagram used, see 3.1.7 and Table 3.1. The strains in the reinforcing steel and the prestressing steel shall be limited to ε_{ud} (where applicable); see 3.2.7 (2) and 3.3.6 (7) respectively.

AC2 (4) For cross-sections loaded by the compression force it is necessary to assume the minimum eccentricity, $e_0 = h/30$ but not less than 20 mm where h is the depth of the section. AC2

AC1 (5) In parts of cross-sections which are subjected to approximately concentric loading ($e_d/h \leq 0{,}1$), such as compression flanges of box girders, the mean compressive strain in that part of the section should be limited to ε_{c2} (or ε_{c3} if the bilinear relation of Figure 3.4 is used). AC1

(6) The possible range of strain distributions is shown in Figure 6.1.

(7) For prestressed members with permanently unbonded tendons see 5.10.8.

(8) For external prestressing tendons the strain in the prestressing steel between two subsequent contact points (anchors or deviation saddles) is assumed to be constant. The strain in the prestressing steel is then equal to the initial strain, realised just after completion of the prestressing operation, increased by the strain resulting from the structural deformation between the contact areas considered. See also 5.10.

Licensed copy:University of Wales Trinity Saint David, 12/03/2020, Uncontrolled Copy, © BSI

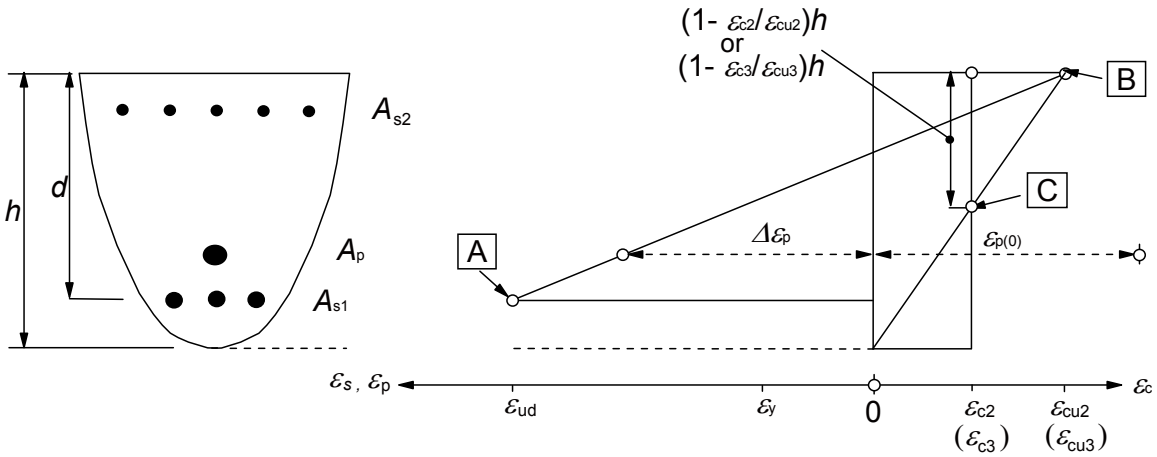

A - reinforcing steel tension strain limit

B - concrete compression strain limit

C - concrete pure compression strain limit

Figure 6.1: Possible strain distributions in the ultimate limit state

6.2 Shear

6.2.1 General verification procedure

(1)P For the verification of the shear resistance the following symbols are defined:

$V_{Rd,c}$ is the design shear resistance of the member without shear reinforcement.
$V_{Rd,s}$ is the design value of the shear force which can be sustained by the yielding shear reinforcement.
$V_{Rd,max}$ is the design value of the maximum shear force which can be sustained by the member, limited by crushing of the compression struts.

In members with inclined chords the following additional values are defined (see Figure 6.2):

V_{ccd} is the design value of the shear component of the force in the compression area, in the case of an inclined compression chord.
V_{td} is the design value of the shear component of the force in the tensile reinforcement, in the case of an inclined tensile chord.

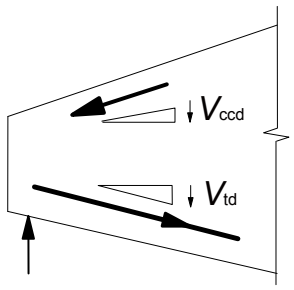

Figure 6.2: Shear component for members with inclined chords

Licensed copy:University of Wales Trinity Saint David, 12/03/2020, Uncontrolled Copy, © BSI

(2) The shear resistance of a member with shear reinforcement is equal to:

$$V_{Rd} = V_{Rd,s} + V_{ccd} + V_{td} \quad (6.1)$$

(3) In regions of the member where $V_{Ed} \leq V_{Rd,c}$ no calculated shear reinforcement is necessary. V_{Ed} is the design shear force in the section considered resulting from external loading and prestressing (bonded or unbonded).

(4) When, on the basis of the design shear calculation, no shear reinforcement is required, minimum shear reinforcement should nevertheless be provided according to 9.2.2. The minimum shear reinforcement may be omitted in members such as slabs (solid, ribbed or hollow core slabs) where transverse redistribution of loads is possible. Minimum reinforcement may also be omitted in members of minor importance (e.g. lintels with span ≤ 2 m) which do not contribute significantly to the overall resistance and stability of the structure.

(5) In regions where $V_{Ed} > V_{Rd,c}$ according to Expression (6.2), sufficient shear reinforcement [AC1] should be provided in order that $V_{Ed} \leq V_{Rd}$ (see Expression (6.1)).[AC1]

(6) The sum of the design shear force and the contributions of the flanges, $V_{Ed} - V_{ccd} - V_{td}$, should not exceed the permitted maximum value $V_{Rd,max}$ (see 6.2.3), anywhere in the member.

(7) The longitudinal tension reinforcement should be able to resist the additional tensile force caused by shear (see 6.2.3 (7)).

(8) For members subject to predominantly uniformly distributed loading the design shear force need not to be checked at a distance less than d from the face of the support. Any shear reinforcement required should continue to the support. In addition it should be verified that the shear at the support does not exceed $V_{Rd,max}$ (see also 6.2.2 (6) and 6.2.3 (8).

(9) Where a load is applied near the bottom of a section, sufficient vertical reinforcement to carry the load to the top of the section should be provided in addition to any reinforcement required to resist shear.

6.2.2 Members not requiring design shear reinforcement

(1) The design value for the shear resistance $V_{Rd,c}$ is given by:

$$V_{Rd,c} = [C_{Rd,c} k (100\, \rho_l f_{ck})^{1/3} + k_1\, \sigma_{cp}]\, b_w d \quad (6.2.a)$$

with a minimum of

$$V_{Rd,c} = (v_{min} + k_1 \sigma_{cp})\, b_w d \quad (6.2.b)$$

where:

f_{ck} is in MPa

$k = 1 + \sqrt{\dfrac{200}{d}} \leq 2{,}0$ with d in mm

$\rho_l = \dfrac{A_{sl}}{b_w d} \leq 0{,}02$

A_{sl} is the area of the tensile reinforcement, which extends ≥ (l_{bd} + d) beyond the section considered (see Figure 6.3).

b_w is the smallest width of the cross-section in the tensile area [mm]
σ_{cp} = N_{Ed}/A_c < 0,2 f_{cd} [MPa]
N_{Ed} is the axial force in the cross-section due to loading or prestressing [in N] (N_{Ed}>0 [AC1] for compression). The influence of imposed deformations on N_{Ed} may be ignored.[AC1]
A_C is the area of concrete cross section [mm^2]
$V_{Rd,c}$ is [N]

Note: The values of $C_{Rd,c}$, v_{min} and k_1 for use in a Country may be found in its National Annex. The recommended value for $C_{Rd,c}$ is 0,18/γ_c, that for v_{min} is given by Expression (6.3N) and that for k_1 is 0,15.

$$v_{min} = 0{,}035\, k^{3/2} \cdot f_{ck}^{\,1/2} \qquad (6.3N)$$

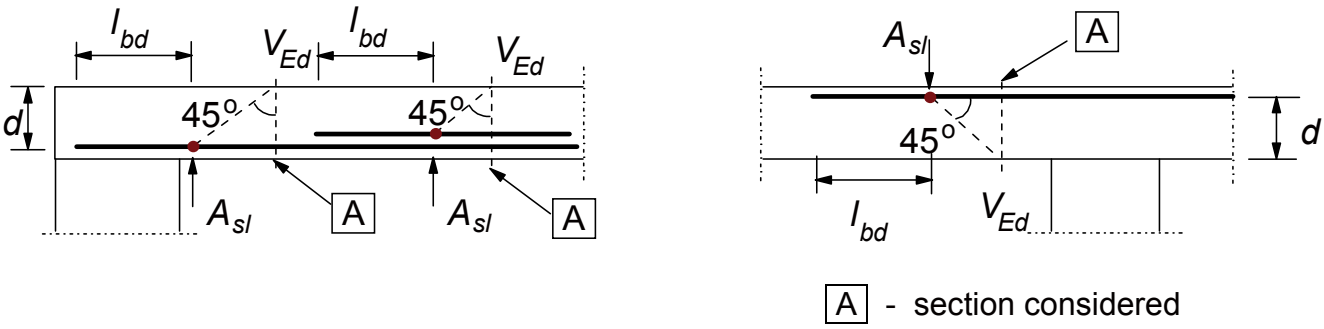

Figure 6.3: Definition of A_{sl} in Expression (6.2)

(2) In prestressed single span members without shear reinforcement, the shear resistance of the regions cracked in bending may be calculated using Expression (6.2a). In regions uncracked in bending (where the flexural tensile stress is smaller than $f_{ctk,0,05}/\gamma_c$) the shear resistance should be limited by the tensile strength of the concrete. In these regions the shear resistance is given by:

$$V_{Rd,c} = \frac{I \cdot b_w}{S} \sqrt{(f_{ctd})^2 + \alpha_l \sigma_{cp} f_{ctd}} \qquad (6.4)$$

where

I is the second moment of area
b_w is the width of the cross-section at the centroidal axis, allowing for the presence of ducts in accordance with Expressions (6.16) and (6.17)
S is the first moment of area above and about the centroidal axis
α_l = l_x/l_{pt2} ≤ 1,0 for pretensioned tendons
= 1,0 for other types of prestressing
l_x is the distance of section considered from the starting point of the transmission length
l_{pt2} is the upper bound value of the transmission length of the prestressing element according to Expression (8.18).
σ_{cp} is the concrete compressive stress at the centroidal axis due to axial loading and/or prestressing (σ_{cp} = N_{Ed}/A_c in MPa, N_{Ed} > 0 in compression)

For cross-sections where the width varies over the height, the maximum principal stress may occur on an axis other than the centroidal axis. In such a case the minimum value of the shear resistance should be found by calculating $V_{Rd,c}$ at various axes in the cross-section.

Licensed copy:University of Wales Trinity Saint David, 12/03/2020, Uncontrolled Copy, © BSI

Licensed copy:University of Wales Trinity Saint David, 12/03/2020, Uncontrolled Copy, © BSI

(3) The calculation of the shear resistance according to Expression (6.4) is not required for cross-sections that are nearer to the support than the point which is the intersection of the elastic centroidal axis and a line inclined from the inner edge of the support at an angle of 45°.

(4) For the general case of members subjected to a bending moment and an axial force, which can be shown to be uncracked in flexure at the ULS, reference is made to 12.6.3.

(5) For the design of the longitudinal reinforcement, in the region cracked in flexure, the M_{Ed} - line should be shifted over a distance $a_l = d$ in the unfavourable direction (see 9.2.1.3 (2)).

(6) For members with loads applied on the upper side within a distance $0{,}5d \leq a_v \leq 2d$ from the edge of a support (or centre of bearing where flexible bearings are used), the contribution of this load to the shear force V_{Ed} may be multiplied by $\beta = a_v/2d$. This reduction may be applied for checking $V_{Rd,c}$ in Expression (6.2.a). This is only valid provided that the longitudinal reinforcement is fully anchored at the support. For $a_v \leq 0{,}5d$ the value $a_v = 0{,}5d$ should be used.

The shear force V_{Ed}, calculated without reduction by β, should however always satisfy the condition

$$V_{Ed} \leq 0{,}5\, b_w d\, \nu f_{cd} \qquad (6.5)$$

where ν is a strength reduction factor for concrete cracked in shear

Note: The value ν for use in a Country may be found in its National Annex. The recommended value follows from:

$$\nu = 0{,}6\left[1 - \frac{f_{ck}}{250}\right] \qquad (f_{ck} \text{ in MPa}) \qquad (6.6N)$$

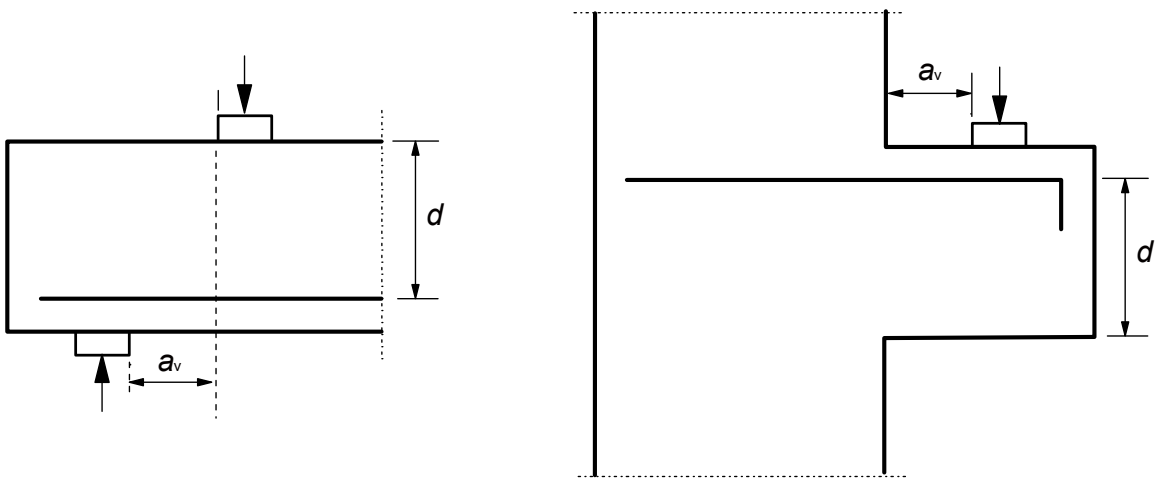

(a) Beam with direct support **(b) Corbel**

Figure 6.4: Loads near supports

(7) Beams with loads near to supports and corbels may alternatively be designed with strut and tie models. For this alternative, reference is made to 6.5.

Licensed copy:University of Wales Trinity Saint David, 12/03/2020, Uncontrolled Copy, © BSI

6.2.3 Members requiring design shear reinforcement

(1) The design of members with shear reinforcement is based on a truss model (Figure 6.5). Limiting values for the angle θ of the inclined struts in the web are given in 6.2.3 (2).

In Figure 6.5 the following notations are shown:

- α is the angle between shear reinforcement and the beam axis perpendicular to the shear force (measured positive as shown in Figure 6.5)
- θ is the angle between the concrete compression strut and the beam axis perpendicular to the shear force
- F_{td} is the design value of the tensile force in the longitudinal reinforcement
- F_{cd} is the design value of the concrete compression force in the direction of the longitudinal member axis.
- b_w is the minimum width between tension and compression chords
- z is the inner lever arm, for a member with constant depth, corresponding to the bending moment in the element under consideration. In the shear analysis of reinforced concrete without axial force, the approximate value $z = 0{,}9d$ may normally be used.

In elements with inclined prestressing tendons, longitudinal reinforcement at the tensile chord [AC1] should be provided to carry the longitudinal tensile force due to shear defined in (7).[AC1]

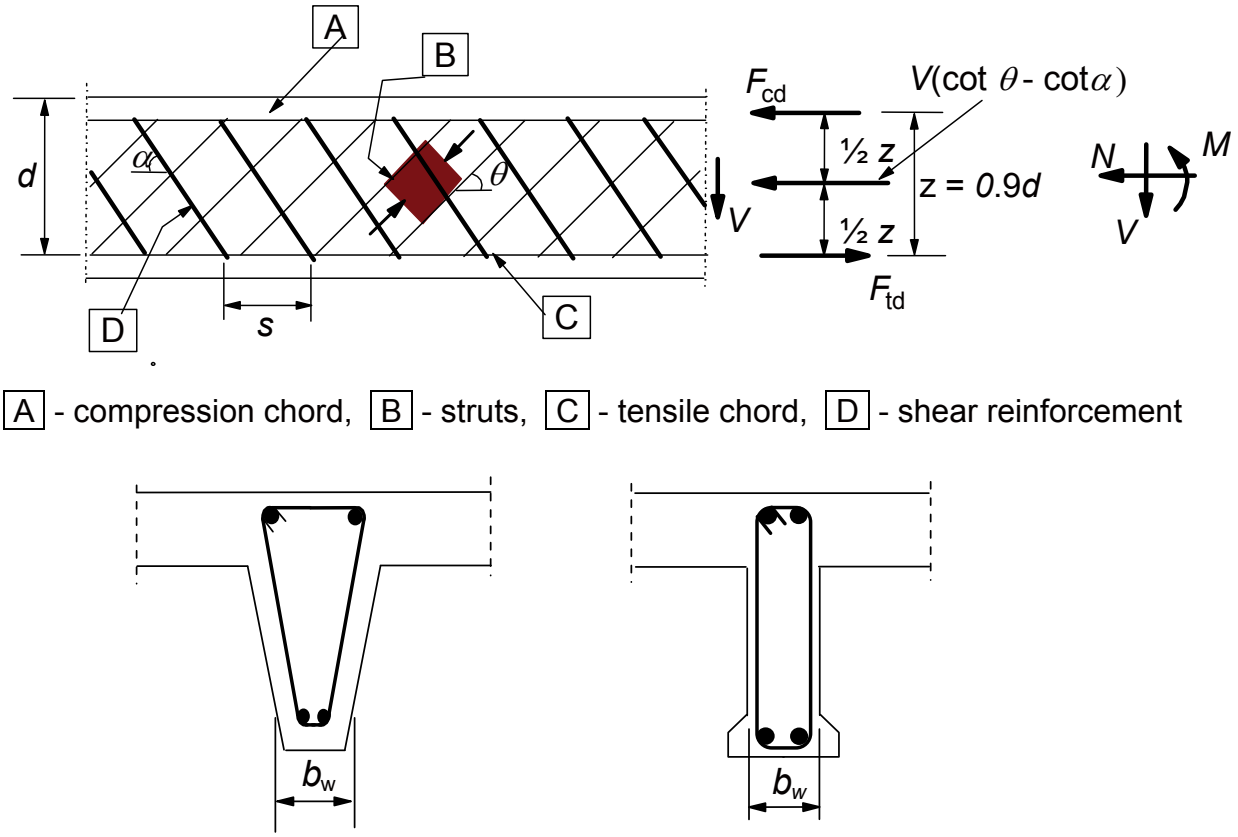

A - compression chord, B - struts, C - tensile chord, D - shear reinforcement

Figure 6.5: Truss model and notation for shear reinforced members

(2) The angle θ should be limited.

Note: The limiting values of $\cot\theta$ for use in a Country may be found in its National Annex. The recommended limits are given in Expression (6.7N).

$$1 \le \cot\theta \le 2{,}5 \qquad (6.7N)$$

(3) For members with vertical shear reinforcement, the shear resistance, V_{Rd} is the smaller value of:

$$V_{Rd,s} = \frac{A_{sw}}{s} z f_{ywd} \cot\theta \tag{6.8}$$

Note: If Expression (6.10) is used the value of f_{ywd} should be reduced to 0,8 f_{ywk} in Expression (6.8)

and

$$V_{Rd,max} = \alpha_{cw} b_w z \nu_1 f_{cd}/(\cot\theta + \tan\theta) \tag{6.9}$$

where:

A_{sw} is the cross-sectional area of the shear reinforcement
s is the spacing of the stirrups
f_{ywd} is the design yield strength of the shear reinforcement
ν_1 is a strength reduction factor for concrete cracked in shear
α_{cw} is a coefficient taking account of the state of the stress in the compression chord

Note 1: The value of ν_1 and α_{cw} for use in a Country may be found in its National Annex. The recommended value of ν_1 is ν (see Expression (6.6N)).

Note 2: If the design stress of the shear reinforcement is below 80% of the characteristic yield stress f_{yk}, ν_1 may be taken as:

$\nu_1 = 0{,}6$ for $f_{ck} \leq 60$ MPa (6.10.aN)
$\nu_1 = 0{,}9 - f_{ck}/200 > 0{,}5$ for $f_{ck} \geq 60$ MPa (6.10.bN)

Note 3: The recommended value of α_{cw} is as follows:

1 for non-prestressed structures
$(1 + \sigma_{cp}/f_{cd})$ for $0 < \sigma_{cp} \leq 0{,}25\, f_{cd}$ (6.11.aN)
1,25 for $0{,}25\, f_{cd} < \sigma_{cp} \leq 0{,}5\, f_{cd}$ (6.11.bN)
$2{,}5\,(1 - \sigma_{cp}/f_{cd})$ for $0{,}5\, f_{cd} < \sigma_{cp} < 1{,}0\, f_{cd}$ (6.11.cN)

where:

σ_{cp} is the mean compressive stress, measured positive, in the concrete due to the design axial force. This should be obtained by averaging it over the concrete section taking account of the reinforcement. The value of σ_{cp} need not be calculated at a distance less than $0.5d \cot\theta$ from the edge of the support.

Note 4: The maximum effective cross-sectional area of the shear reinforcement, $A_{sw,max}$, for $\cot\theta = 1$ is given by:

$$\frac{A_{sw,max} f_{ywd}}{b_w s} \leq \tfrac{1}{2}\, \alpha_{cw} \nu_1 f_{cd} \tag{6.12}$$

(4) For members with inclined shear reinforcement, the shear resistance is the smaller value of

$$V_{Rd,s} = \frac{A_{sw}}{s} z f_{ywd} (\cot\theta + \cot\alpha) \sin\alpha \tag{6.13}$$

and

$$V_{Rd,max} = \alpha_{cw} b_w z \nu_1 f_{cd} (\cot\theta + \cot\alpha)/(1 + \cot^2\theta) \tag{6.14}$$

Note: The maximum effective shear reinforcement, $A_{sw,max}$ for $\cot\theta = 1$ follows from:

$$\frac{A_{sw,max} \quad f_{ywd}}{b_w s} \leq \frac{\tfrac{1}{2}\alpha_{cw} \nu_1 f_{cd}}{\sin\alpha} \tag{6.15}$$

Licensed copy:University of Wales Trinity Saint David, 12/03/2020, Uncontrolled Copy, © BSI

Licensed copy:University of Wales Trinity Saint David, 12/03/2020, Uncontrolled Copy, © BSI

(5) In regions where there is no discontinuity of V_{Ed} [AC1] (e.g. for uniformly distributed loading applied at the top) the shear reinforcement in any length increment $l = z(\cot\theta)$ may be [AC1] calculated using the smallest value of V_{Ed} in the increment.

(6) [AC1] Where the web contains grouted metal ducts [AC1] with a diameter $\phi > b_w/8$ the shear resistance $V_{Rd,max}$ should be calculated on the basis of a nominal web thickness given by:

$$b_{w,nom} = b_w - 0{,}5\Sigma\phi \tag{6.16}$$

where ϕ is the outer diameter of the duct and $\Sigma\phi$ is determined for the most unfavourable level.

For grouted metal ducts with $\phi \leq b_w/8$, $b_{w,nom} = b_w$

For non-grouted ducts, grouted plastic ducts and unbonded tendons the nominal web thickness is:

$$b_{w,nom} = b_w - 1{,}2\,\Sigma\phi \tag{6.17}$$

The value 1,2 in Expression (6.17) is introduced to take account of splitting of the concrete struts due to transverse tension. If adequate transverse reinforcement is provided this value may be reduced to 1,0.

(7) The additional tensile force, ΔF_{td}, in the longitudinal reinforcement due to shear V_{Ed} may be calculated from:

$$\Delta F_{td} = 0{,}5\,V_{Ed}\,(\cot\theta - \cot\alpha) \tag{6.18}$$

$(M_{Ed}/z) + \Delta F_{td}$ should be taken not greater than $M_{Ed,max}/z$, where $M_{Ed,max}$ is the maximum moment along the beam.

(8) For members with loads applied on the upper side within a distance $0{,}5d \leq a_v \leq 2{,}0d$ the contribution of this load to the shear force V_{Ed} may be reduced by $\beta = a_v/2d$.
The shear force V_{Ed}, calculated in this way, should satisfy the condition

$$V_{Ed} \leq A_{sw} \cdot f_{ywd} \sin\alpha \tag{6.19}$$

where $A_{sw} \cdot f_{ywd}$ is the resistance of the shear reinforcement crossing the inclined shear crack between the loaded areas (see Figure 6.6). Only the shear reinforcement within the central $0{,}75\,a_v$ should be taken into account. The reduction by β should only be applied for calculating the shear reinforcement. It is only valid provided that the longitudinal reinforcement is fully anchored at the support.

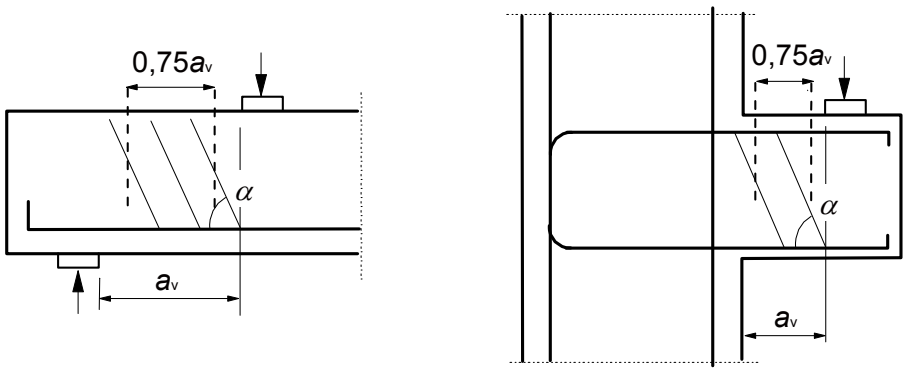

Figure 6.6: Shear reinforcement in short shear spans with direct strut action

For $a_v < 0{,}5d$ the value $a_v = 0{,}5d$ should be used.

[AC1] The value V_{Ed} calculated without reduction by β, should however always be less than $V_{Rd,max}$, see Expression (6.9).[AC1]

[AC1] 6.2.4 Shear between web and flanges [AC1]

(1) The shear strength of the flange may be calculated by considering the flange as a system of compressive struts combined with ties in the form of tensile reinforcement.

(2) A minimum amount of longitudinal reinforcement should be provided, as specified in 9.3.1.

(3) The longitudinal shear stress, $v_{Ed,}$ at the junction between one side of a flange and the web is determined by the change of the normal (longitudinal) force in the part of the flange considered, according to:

$$v_{Ed} = \Delta F_d/(h_f \cdot \Delta x) \tag{6.20}$$

where:

h_f is the thickness of flange at the junctions

Δx is the length under consideration, see Figure 6.7

ΔF_d is the change of the normal force in the flange over the length Δx.

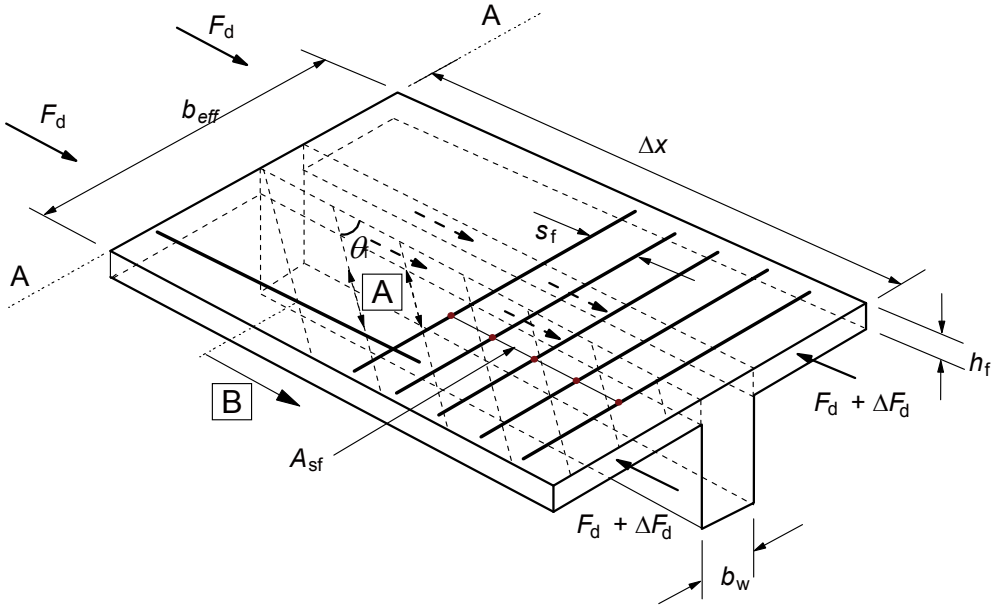

A - compressive struts B - longitudinal bar anchored beyond this projected point (see 6.2.4 (7))

Figure 6.7: Notations for the connection between flange and web

The maximum value that may be assumed for Δx is half the distance between the section where the moment is 0 and the section where the moment is maximum. Where point loads are applied the length Δx should not exceed the distance between point loads.

(4) The transverse reinforcement per unit length A_{sf}/s_f may be determined as follows:

$$(A_{sf} f_{yd}/s_f) \geq v_{Ed} \cdot h_f / \cot \theta_f \tag{6.21}$$

Licensed copy:University of Wales Trinity Saint David, 12/03/2020, Uncontrolled Copy, © BSI

To prevent crushing of the compression struts in the flange, the following condition should be satisfied:

$$v_{Ed} \leq \nu f_{cd} \sin\theta_f \cos\theta_f \quad (6.22)$$

Note: The permitted range of the values for cot θ_f for use in a country may be found in its National Annex. The recommended values in the absence of more rigorous calculation are:

$1{,}0 \leq \cot\theta_f \leq 2{,}0$ for compression flanges ($45° \geq \theta_f \geq 26{,}5°$)

$1{,}0 \leq \cot\theta_f \leq 1{,}25$ for tension flanges ($45° \geq \theta_f \geq 38{,}6°$)

(5) In the case of combined shear between the flange and the web, and transverse bending, the area of steel should be the greater than that given by Expression (6.21) or half that given by Expression (6.21) plus that required for transverse bending.

(6) If v_{Ed} is less than or equal to kf_{ctd} no extra reinforcement above that for flexure is required.

Note: The value of k for use in a Country may be found in its National Annex. The recommended value is 0,4.

(7) Longitudinal tension reinforcement in the flange should be anchored beyond the strut required to transmit the force back to the web at the section where this reinforcement is required (See Section (A - A) of Figure 6.7).

6.2.5 Shear at the interface between concrete cast at different times

(1) In addition to the requirements of 6.2.1- 6.2.4 the shear stress at the interface between concrete cast at different times should also satisfy the following:

$$v_{Edi} \leq v_{Rdi} \quad (6.23)$$

v_{Edi} is the design value of the shear stress in the interface and is given by:

$$v_{Edi} = \beta V_{Ed} / (z\, b_i) \quad (6.24)$$

where:

- β is the ratio of the longitudinal force in the new concrete area and the total longitudinal force either in the compression or tension zone, both calculated for the section considered
- V_{Ed} is the transverse shear force
- z is the lever arm of composite section
- b_i is the width of the interface (see Figure 6.8)
- v_{Rdi} is the design shear resistance at the interface and is given by:

$$v_{Rdi} = c\, f_{ctd} + \mu\, \sigma_n + \rho\, f_{yd} (\mu \sin\alpha + \cos\alpha) \leq 0{,}5\, \nu\, f_{cd} \quad (6.25)$$

where:

- c and μ are factors which depend on the roughness of the interface (see (2))
- f_{ctd} is as defined in 3.1.6 (2)P
- σ_n stress per unit area caused by the minimum external normal force across the interface that can act simultaneously with the shear force, positive for compression, such that $\sigma_n < 0{,}6\, f_{cd}$, and negative for tension. When σ_n is tensile $c\, f_{ctd}$ should be taken as 0.
- ρ $= A_s / A_i$

Licensed copy:University of Wales Trinity Saint David, 12/03/2020, Uncontrolled Copy, © BSI

Licensed copy:University of Wales Trinity Saint David, 12/03/2020, Uncontrolled Copy, © BSI

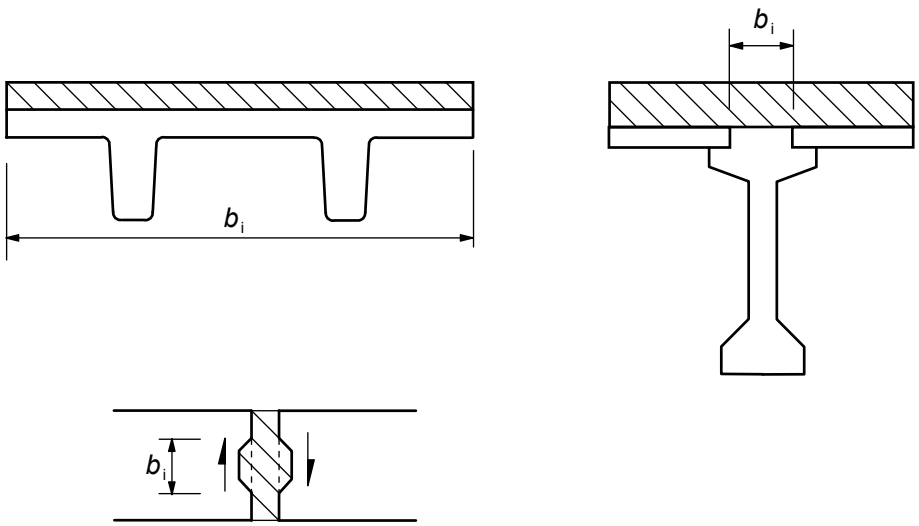

Figure 6.8: Examples of interfaces

A_s is the area of reinforcement crossing the interface, including ordinary shear reinforcement (if any), with adequate anchorage at both sides of the interface.
A_i is the area of the joint
α is defined in Figure 6.9, and should be limited by $45° \leq \alpha \leq 90°$
ν is a strength reduction factor (see 6.2.2 (6))

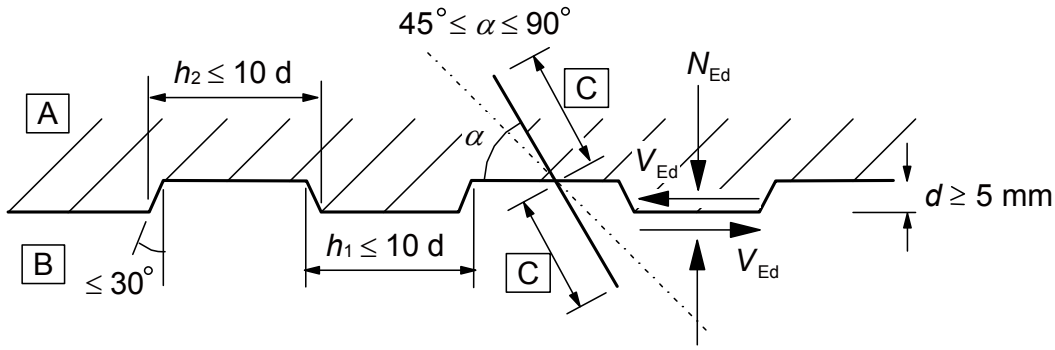

A - new concrete, B - old concrete, C - anchorage

Figure 6.9: Indented construction joint

(2) In the absence of more detailed information surfaces may be classified as very smooth, smooth, rough or indented, with the following examples:

AC1
- Very smooth: a surface cast against steel, plastic or specially prepared wooden moulds: c = 0,025 to 0,10 and μ = 0,5
- Smooth: a slipformed or extruded surface, or a free surface left without further treatment after vibration: c = 0,20 and μ = 0,6
- Rough: a surface with at least 3 mm roughness at about 40 mm spacing, achieved by raking, exposing of aggregate or other methods giving an equivalent behaviour: c = 0,40 and μ = 0,7 AC1
- Indented: a surface with indentations complying with Figure 6.9: c = 0,50 and μ = 0,9

(3) A stepped distribution of the transverse reinforcement may be used, as indicated in Figure 6.10. Where the connection between the two different concretes is ensured by reinforcement

(beams with lattice girders), the steel contribution to v_{Rdi} may be taken as the resultant of the forces taken from each of the diagonals provided that $45° \leq \alpha \leq 135°$.

(4) The longitudinal shear resistance of grouted joints between slab or wall elements may be calculated according to 6.2.5 (1). However in cases where the joint can be significantly cracked, *c* should be taken as 0 for smooth and rough joints and 0,5 for indented joints (see also 10.9.3 (12)).

(5) Under fatigue or dynamic loads, the values for *c* in 6.2.5 (1) should be halved.

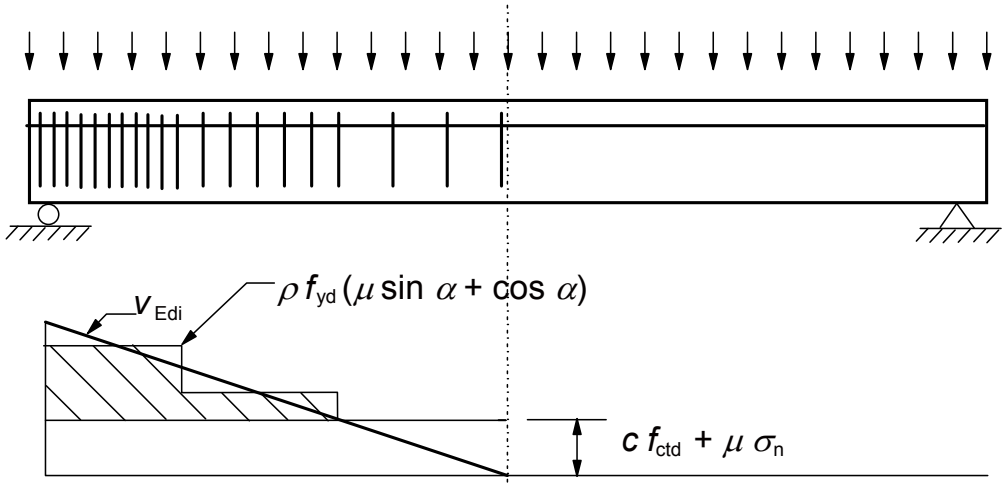

Figure 6.10: Shear diagram representing the required interface reinforcement

6.3 Torsion

6.3.1 General

(1)P Where the static equilibrium of a structure depends on the torsional resistance of elements of the structure, a full torsional design covering both ultimate and serviceability limit states shall be made.

(2) Where, in statically indeterminate structures, torsion arises from consideration of compatibility only, and the structure is not dependent on the torsional resistance for its stability, then it will normally be unnecessary to consider torsion at the ultimate limit state. In such cases a minimum reinforcement, given in Sections 7.3 and 9.2, in the form of stirrups and longitudinal bars should be provided in order to prevent excessive cracking.

(3) The torsional resistance of a section may be calculated on the basis of a thin-walled closed section, in which equilibrium is satisfied by a closed shear flow. Solid sections may be modelled by equivalent thin-walled sections. Complex shapes, such as T-sections, may be divided into a series of sub-sections, each of which is modelled as an equivalent thin-walled section, and the total torsional resistance taken as the sum of the capacities of the individual elements.

(4) The distribution of the acting torsional moments over the sub-sections should be in proportion to their uncracked torsional stiffnesses. For non-solid sections the equivalent wall thickness should not exceed the actual wall thickness.

(5) Each sub-section may be designed separately.

Licensed copy:University of Wales Trinity Saint David, 12/03/2020, Uncontrolled Copy, © BSI

Licensed copy:University of Wales Trinity Saint David, 12/03/2020, Uncontrolled Copy, © BSI

6.3.2 Design procedure

(1) The shear stress in a wall of a section subject to a pure torsional moment may be calculated from:

$$\tau_{t,i} t_{ef,i} = \frac{T_{Ed}}{2A_k} \tag{6.26}$$

The shear force $V_{Ed,i}$ in a wall *i* due to torsion is given by:

$$V_{Ed,i} = \tau_{t,i} t_{ef,i} z_i \tag{6.27}$$

where

T_{Ed} is the applied design torsion (see Figure 6.11)

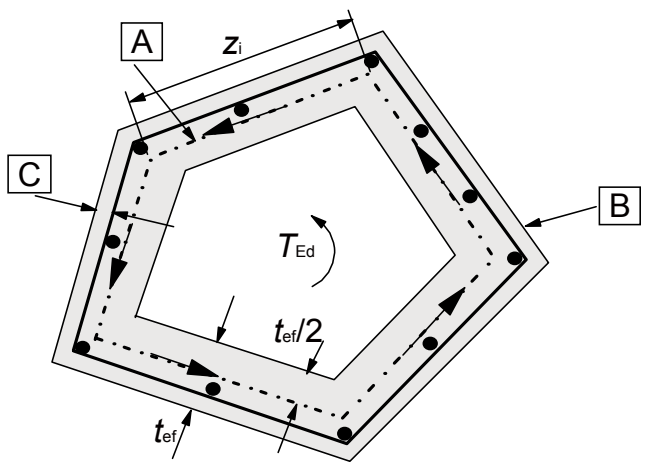

A - centre-line

B - outer edge of effective cross-section, circumference *u*,

C - cover

Figure 6.11: Notations and definitions used in Section 6.3

A_k is the area enclosed by the centre-lines of the connecting walls, including inner hollow areas.

$\tau_{t,i}$ is the torsional shear stress in wall *i*

$t_{ef,i}$ is the effective wall thickness. It may be taken as A/u, but should not be taken as less than twice the distance between edge and centre of the longitudinal reinforcement. For hollow sections the real thickness is an upper limit

A is the total area of the cross-section within the outer circumference, including inner hollow areas

u is the outer circumference of the cross-section

z_i is the side length of wall *i* defined by the distance between the intersection points with the adjacent walls

(2) The effects of torsion and shear for both hollow and solid members may be superimposed, assuming the same value for the strut inclination θ. The limits for θ given in 6.2.3 (2) are also fully applicable for the case of combined shear and torsion.

The maximum bearing capacity of a member loaded in shear and torsion follows from 6.3.2 (4).

(3) The required cross-sectional area of the longitudinal reinforcement for torsion ΣA_{sl} may be calculated from Expression (6.28):

$$\frac{\sum A_{sl} f_{yd}}{u_k} = \frac{T_{Ed}}{2A_k} \cot\theta \tag{6.28}$$

where

u_k is the perimeter of the area A_k

f_{yd} is the design yield stress of the longitudinal reinforcement A_{sl}

θ is the angle of compression struts (see Figure 6.5).

In compressive chords, the longitudinal reinforcement may be reduced in proportion to the available compressive force. In tensile chords the longitudinal reinforcement for torsion should be added to the other reinforcement. The longitudinal reinforcement should generally be distributed over the length of side, z_i, but for smaller sections it may be concentrated at the ends of this length.

(4) The maximum resistance of a member subjected to torsion and shear is limited by the capacity of the concrete struts. In order not to exceed this resistance the following condition should be satisfied:

$$T_{Ed} / T_{Rd,max} + V_{Ed} / V_{Rd,max} \leq 1{,}0 \tag{6.29}$$

where:

T_{Ed} is the design torsional moment

V_{Ed} is the design transverse force

$T_{Rd,max}$ is the design torsional resistance moment according to

$$T_{Rd,max} = 2\nu\,\alpha_{cw} f_{cd} A_k t_{ef,i} \sin\theta \cos\theta \tag{6.30}$$

[AC1] where ν follows from 6.2.2 (6) and α_{cw} from Expression (6.9) [AC1]

$V_{Rd,max}$ is the maximum design shear resistance according to Expressions (6.9) or (6.14). In solid cross sections the full width of the web may be used to determine $V_{Rd,max}$

(5) For approximately rectangular solid sections only minimum reinforcement is required (see 9.2.1.1) provided that the following condition is satisfied:

$$T_{Ed} / T_{Rd,c} + V_{Ed} / V_{Rd,c} \leq 1{,}0 \tag{6.31}$$

where

$T_{Rd,c}$ is the torsional cracking moment, which may be determined by setting $\tau_{t,i} = f_{ctd}$

$V_{Rd,c}$ follows from Expression (6.2)

6.3.3 Warping torsion

(1) For closed thin-walled sections and solid sections, warping torsion may normally be ignored.

(2) In open thin walled members it may be necessary to consider warping torsion. For very slender cross-sections the calculation should be carried out on the basis of a beam-grid model and for other cases on the basis of a truss model. In all cases the design should be carried out according to the design rules for bending and longitudinal normal force, and for shear.

Licensed copy:University of Wales Trinity Saint David, 12/03/2020, Uncontrolled Copy, © BSI

Licensed copy:University of Wales Trinity Saint David, 12/03/2020, Uncontrolled Copy, © BSI

6.4 Punching

6.4.1 General

(1)P The rules in this Section complement those given in 6.2 and cover punching shear in solid slabs, waffle slabs with solid areas over columns, and foundations.

(2)P Punching shear can result from a concentrated load or reaction acting on a relatively small area, called the loaded area A_{load} of a slab or a foundation.

(3) An appropriate verification model for checking punching failure at the ultimate limit state is shown in Figure 6.12.

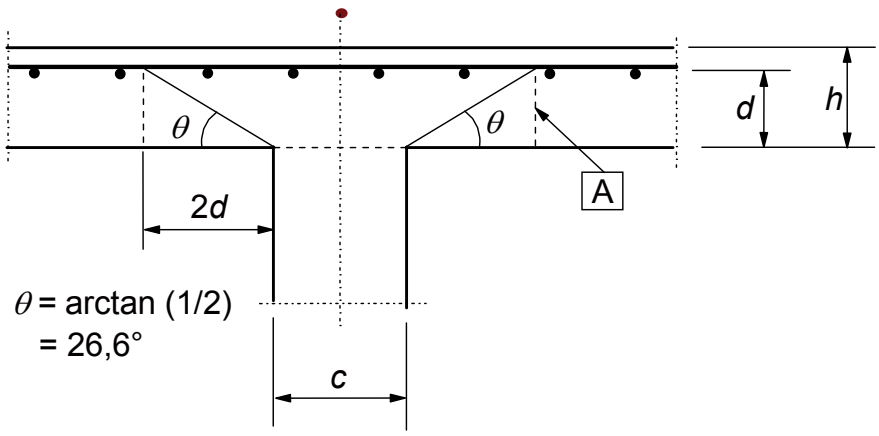

A - basic control section

a) Section

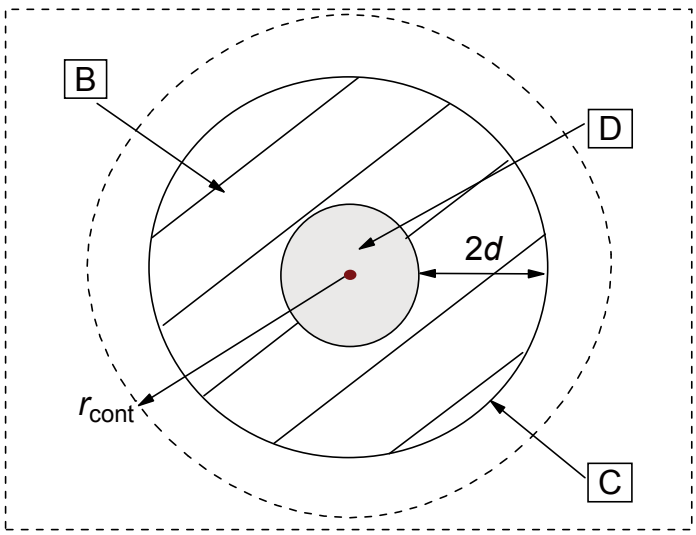

B - basic control area A_{cont}

C - basic control perimeter, u_1

D - loaded area A_{load}

r_{cont} further control perimeter

b) Plan

Figure 6.12: Verification model for punching shear at the ultimate limit state

(4) The shear resistance should be checked at the face of the column and at the basic control perimeter u_1. If shear reinforcement is required a further perimeter $u_{out,ef}$ should be found where shear reinforcement is no longer required.

Licensed copy:University of Wales Trinity Saint David, 12/03/2020, Uncontrolled Copy, © BSI

(5) The rules given in 6.4 are principally formulated for the case of uniformly distributed loading. In special cases, such as footings, the load within the control perimeter adds to the resistance of the structural system, and may be subtracted when determining the design punching shear stress.

6.4.2 Load distribution and basic control perimeter

(1) The basic control perimeter u_1 may normally be taken to be at a distance 2,0d from the loaded area and should be constructed so as to minimise its length (see Figure 6.13).

The effective depth of the slab is assumed constant and may normally be taken as:

$$d_{\text{eff}} = \frac{(d_y + d_z)}{2} \tag{6.32}$$

where d_y and d_z are the effective depths of the reinforcement in two orthogonal directions.

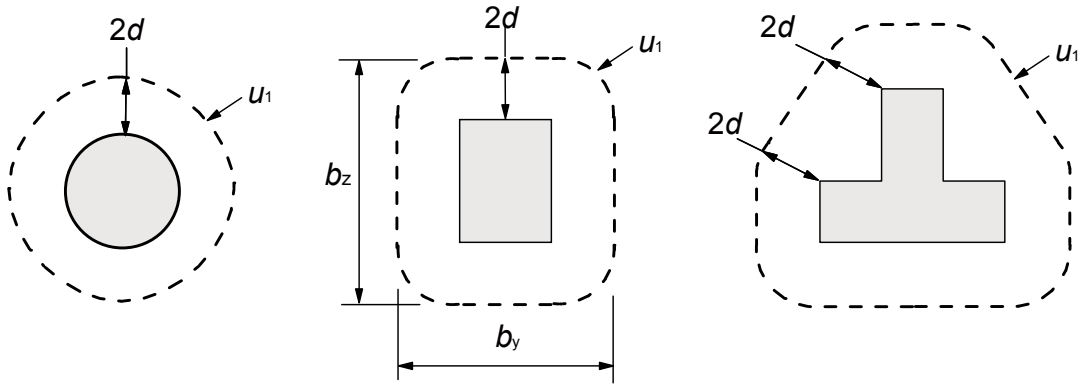

Figure 6.13: Typical basic control perimeters around loaded areas

(2) Control perimeters at a distance less than 2d should be considered where the concentrated force is opposed by a high pressure (e.g. soil pressure on a base), or by the effects of a load or reaction within a distance 2d of the periphery of area of application of the force.

(3) For loaded areas situated near openings, if the shortest distance between the perimeter of the loaded area and the edge of the opening does not exceed 6d, that part of the control perimeter contained between two tangents drawn to the outline of the opening from the centre of the loaded area is considered to be ineffective (see Figure 6.14).

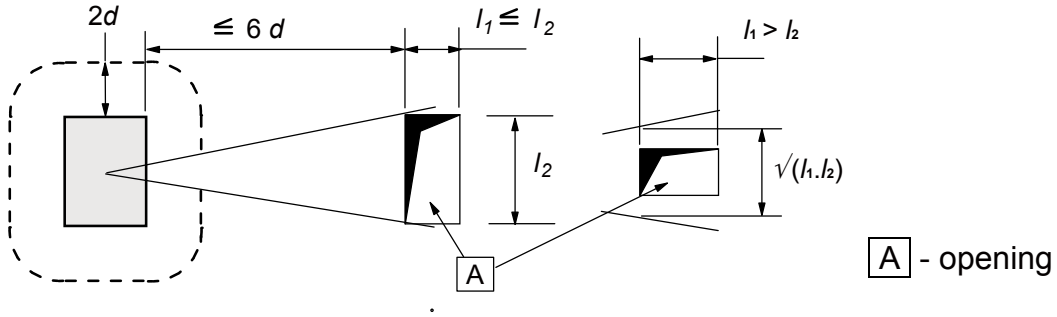

Figure 6.14: Control perimeter near an opening

(4) For a loaded area situated near an edge or a corner, the control perimeter should be taken as shown in Figure 6.15, if this gives a perimeter (excluding the unsupported edges) smaller

than that obtained from (1) and (2) above.

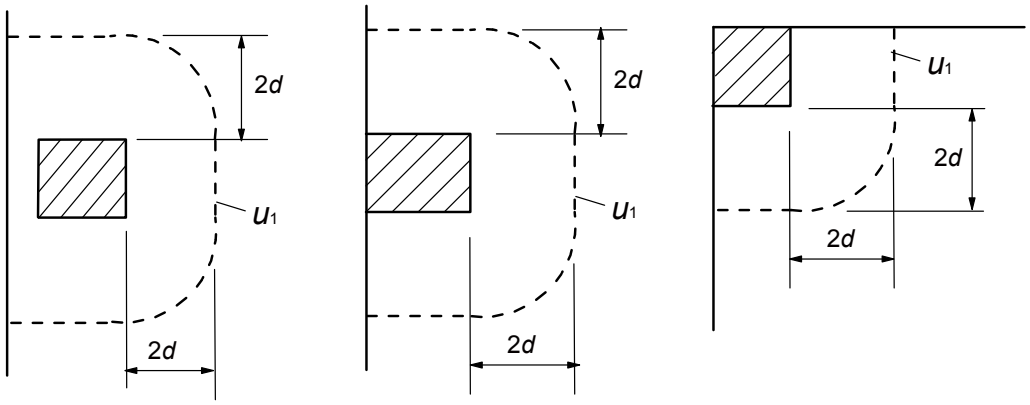

Figure 6.15: Basic control perimeters for loaded areas close to or at edge or corner

(5) For loaded areas situated near an edge or corner, i.e. at a distance smaller than *d*, special edge reinforcement should always be provided, see 9.3.1.4.

(6) The control section is that which follows the control perimeter and extends over the effective depth *d*. For slabs of constant depth, the control section is perpendicular to the middle plane of the slab. For slabs or footings of variable depth other than step footings, the effective depth may be assumed to be the depth at the perimeter of the loaded area as shown in Figure 6.16.

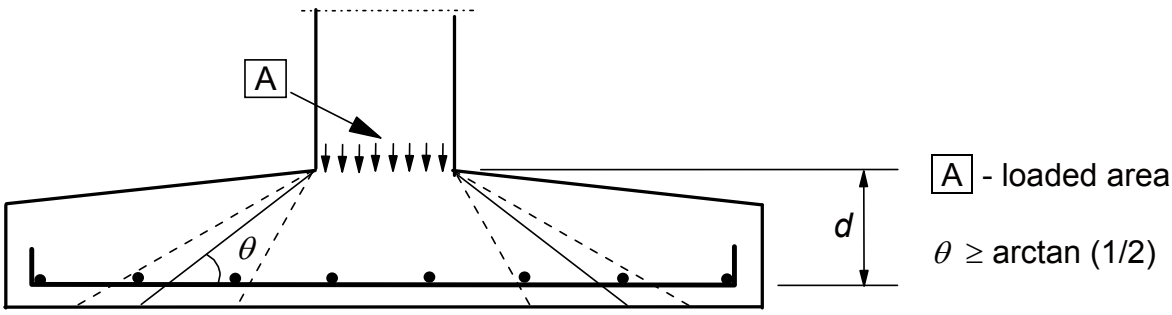

Figure 6.16: Depth of control section in a footing with variable depth

(7) Further perimeters, u_i, inside and outside the basic control area should have the same shape as the basic control perimeter.

(8) For slabs with circular column heads for which $l_H < 2h_H$ (see Figure 6.17) a check of the punching shear stresses according to 6.4.3 is only required on the control section outside the column head. The distance of this section from the centroid of the column r_{cont} may be taken as:

$$r_{cont} = 2d + l_H + 0{,}5c \qquad (6.33)$$

where:

l_H is the distance from the column face to the edge of the column head
c is the diameter of a circular column

Licensed copy:University of Wales Trinity Saint David, 12/03/2020, Uncontrolled Copy, © BSI

Licensed copy:University of Wales Trinity Saint David, 12/03/2020, Uncontrolled Copy, © BSI

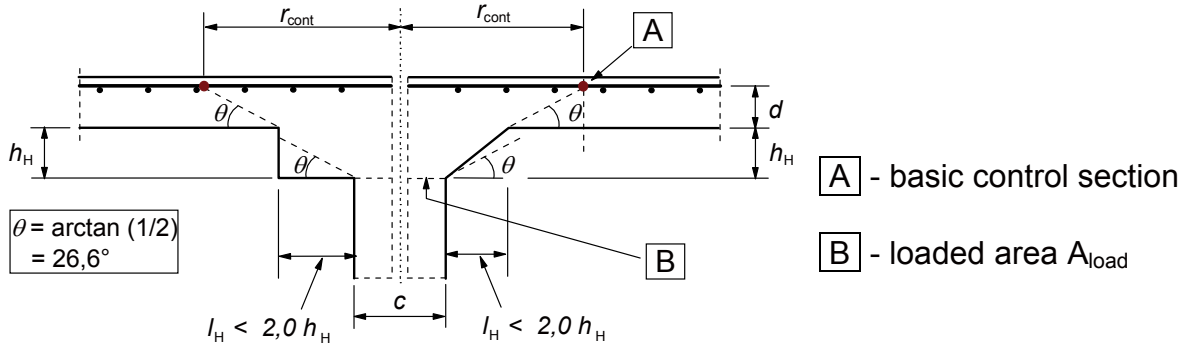

Figure 6.17: Slab with enlarged column head where $l_H < 2,0\ h_H$

For a rectangular column with a rectangular head with $l_H < 2,0h_H$ (see Figure 6.17) and overall dimensions l_1 and l_2 ($l_1 = c_1 + 2l_{H1}$, $l_2 = c_2 + 2l_{H2}$, $l_1 \leq l_2$), the value r_{cont} may be taken as the lesser of:

$$r_{cont} = 2d + 0,56\ \sqrt{l_1 l_2} \tag{6.34}$$

and

$$r_{cont} = 2d + 0,69\ l_1 \tag{6.35}$$

(9) For slabs with enlarged column heads where $l_H > 2h_H$ (see Figure 6.18) control sections both within the head and in the slab should be checked.

(10) The provisions of 6.4.2 and 6.4.3 also apply for checks within the column head with d taken as d_H according to Figure 6.18.

(11) For circular columns the distances from the centroid of the column to the control sections in Figure 6.18 may be taken as:

$$r_{cont,ext} = l_H + 2d + 0,5c \tag{6.36}$$

$$r_{cont,int} = 2(d + h_H) + 0,5c \tag{6.37}$$

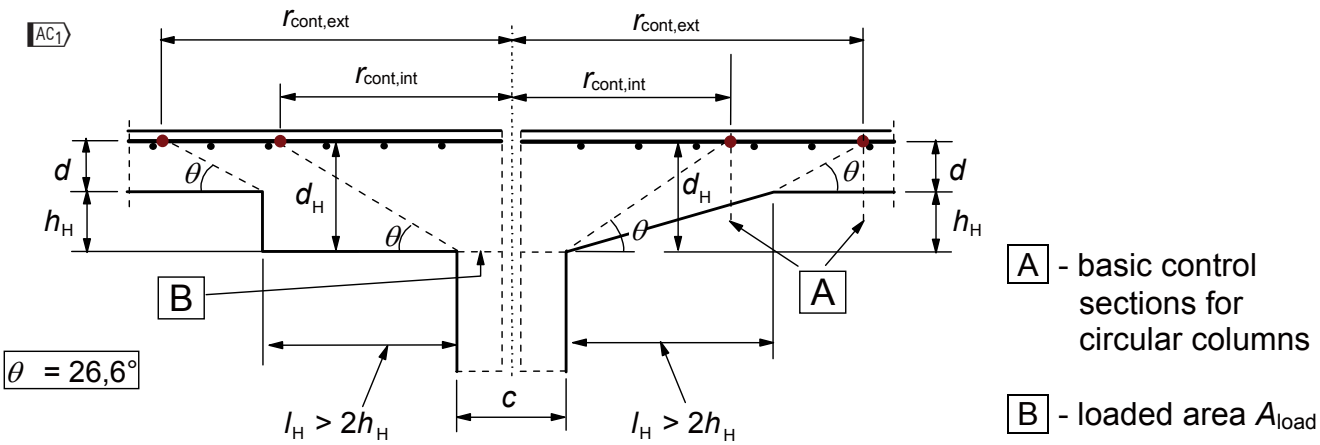

Figure 6.18: Slab with enlarged column head where AC2 $l_H \geq 2h_H$ AC2 AC1

Licensed copy:University of Wales Trinity Saint David, 12/03/2020, Uncontrolled Copy, © BSI

6.4.3 Punching shear calculation

(1)P The design procedure for punching shear is based on checks at the face of the column and at the basic control perimeter u_1. If shear reinforcement is required a further perimeter $u_{out,ef}$ (see figure 6.22) should be found where shear reinforcement is no longer required. The following design shear stresses (MPa) along the control sections, are defined:

$v_{Rd,c}$ is the design value of the punching shear resistance of a slab without punching shear reinforcement along the control section considered.

$v_{Rd,cs}$ is the design value of the punching shear resistance of a slab with punching shear reinforcement along the control section considered.

$v_{Rd,max}$ is the design value of the maximum punching shear resistance along the control section considered.

(2) The following checks should be carried out:

(a) At the column perimeter, or the perimeter of the loaded area, the maximum punching shear stress should not be exceeded:

AC1 $v_{Ed} \leq v_{Rd,max}$ AC1

(b) Punching shear reinforcement is not necessary if:

AC1 $v_{Ed} \leq v_{Rd,c}$ AC1

(c) Where v_{Ed} exceeds the value $v_{Rd,c}$ for the control section considered, punching shear reinforcement should be provided according to 6.4.5.

(3) Where the support reaction is eccentric with regard to the control perimeter, the maximum shear stress should be taken as:

$$v_{Ed} = \beta \frac{V_{Ed}}{u_i d} \tag{6.38}$$

where

d is the mean effective depth of the slab, which may be taken as $(d_y + d_z)/2$ where:

d_y, d_z is the effective depths in the y- and z- directions of the control section

u_i is the length of the control perimeter being considered

β is given by:

$$\beta = 1 + k \frac{M_{Ed}}{V_{Ed}} \cdot \frac{u_1}{W_1} \tag{6.39}$$

where

u_1 is the length of the basic control perimeter

k is a coefficient dependent on the ratio between the column dimensions c_1 and c_2: its value is a function of the proportions of the unbalanced moment transmitted by uneven shear and by bending and torsion (see Table 6.1).

W_1 corresponds to a distribution of shear as illustrated in Figure 6.19 and is a function of the basic control perimeter u_1:

AC1 $$W_i = \int_0^{u_i} |e| dl$$ AC1 (6.40)

Licensed copy:University of Wales Trinity Saint David, 12/03/2020, Uncontrolled Copy, © BSI

dl is a length increment of the perimeter
e is the distance of dl from the axis about which the moment M_{Ed} acts

Table 6.1: Values of *k* for rectangular loaded areas

c_1/c_2	≤ 0,5	1,0	2,0	≥ 3,0
k	0,45	0,60	0,70	0,80

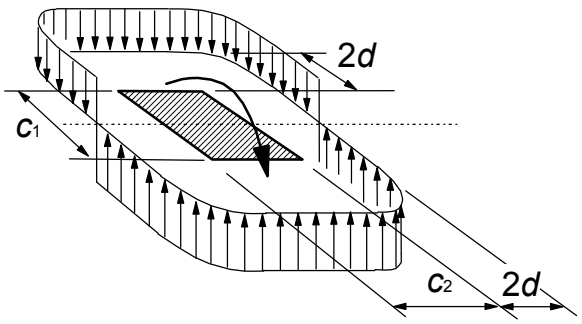

Figure 6.19: Shear distribution due to an unbalanced moment at a slab-internal column connection

For a rectangular column:

$$W_1 = \frac{c_1^2}{2} + c_1 c_2 + 4c_2 d + 16d^2 + 2\pi d c_1 \tag{6.41}$$

where:
c_1 is the column dimension parallel to the eccentricity of the load
c_2 is the column dimension perpendicular to the eccentricity of the load

For internal circular columns β follows from:

$$\beta = 1 + 0{,}6\pi \frac{e}{D + 4d} \tag{6.42}$$

where D is the diameter of the circular column
〖AC1〗 e is the eccentricity of the applied load $e = M_{Ed} / V_{Ed}$ 〈AC1〗

For an internal rectangular column where the loading is eccentric to both axes, the following approximate expression for β may be used:

$$\beta = 1 + 1{,}8\sqrt{\left(\frac{e_y}{b_z}\right)^2 + \left(\frac{e_z}{b_y}\right)^2} \tag{6.43}$$

where:
e_y and e_z are the eccentricities M_{Ed}/V_{Ed} along y and z axes respectively
b_y and b_z is the dimensions of the control perimeter (see Figure 6.13)

Note: e_y results from a moment about the z axis and e_z from a moment about the y axis.

(4) For edge column connections, where the eccentricity perpendicular to the slab edge (resulting from a moment about an axis parallel to the slab edge) is toward the interior and there is no eccentricity parallel to the edge, the punching force may be considered to be uniformly distributed along the control perimeter u_{1*} as shown in Figure 6.20(a).

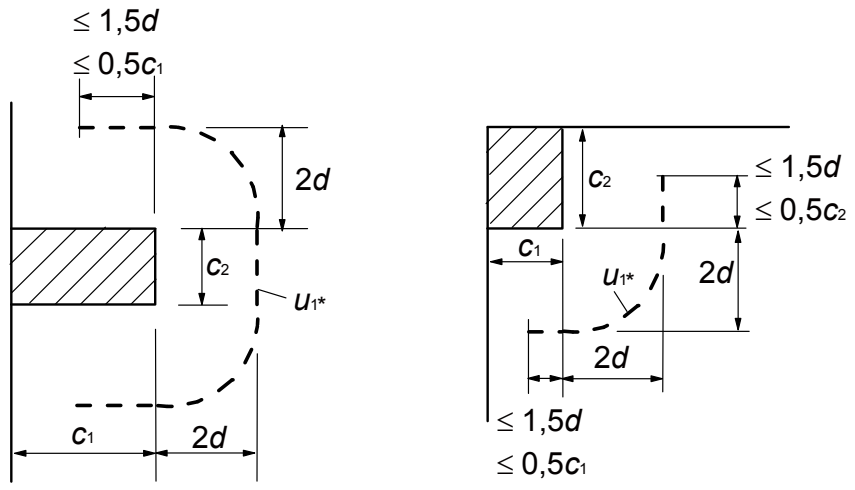

a) edge column **b) corner column**

Figure 6.20: Reduced basic control perimeter u_{1*}

Where there are eccentricities in both orthogonal directions, β may be determined using the following expression:

$$\beta = \frac{u_1}{u_{1*}} + k\,\frac{u_1}{W_1}\,e_{par} \tag{6.44}$$

where:

- u_1 is the basic control perimeter (see Figure 6.15)
- u_{1*} is the reduced basic control perimeter (see Figure 6.20(a))
- e_{par} is the eccentricity parallel to the slab edge resulting from a moment about an axis perpendicular to the slab edge.
- k may be determined from Table 6.1 with the ratio c_1/c_2 replaced by $c_1/2c_2$
- W_1 is calculated for the basic control perimeter u_1 (see Figure 6.13).

For a rectangular column as shown in Figure 6.20(a):

$$W_1 = \frac{c_2^2}{4} + c_1c_2 + 4c_1d + 8d^2 + \pi d c_2 \tag{6.45}$$

If the eccentricity perpendicular to the slab edge is not toward the interior, Expression (6.39) applies. When calculating W_1 [AC1⟩ the distance e should be measured from the centroid axis of the control perimeter.⟨AC1]

(5) For corner column connections, where the eccentricity is toward the interior of the slab, it is assumed that the punching force is uniformly distributed along the reduced control perimeter u_{1*}, as defined in Figure 6.20(b). The β-value may then be considered as:

$$\beta = \frac{u_1}{u_{1*}} \tag{6.46}$$

If the eccentricity is toward the exterior, Expression (6.39) applies.

Licensed copy:University of Wales Trinity Saint David, 12/03/2020, Uncontrolled Copy, © BSI

(6) For structures where the lateral stability does not depend on frame action between the slabs and the columns, and where the adjacent spans do not differ in length by more than 25%, approximate values for β may be used.

Note: Values of β for use in a Country may be found in its National Annex. Recommended values are given in Figure 6.21N.

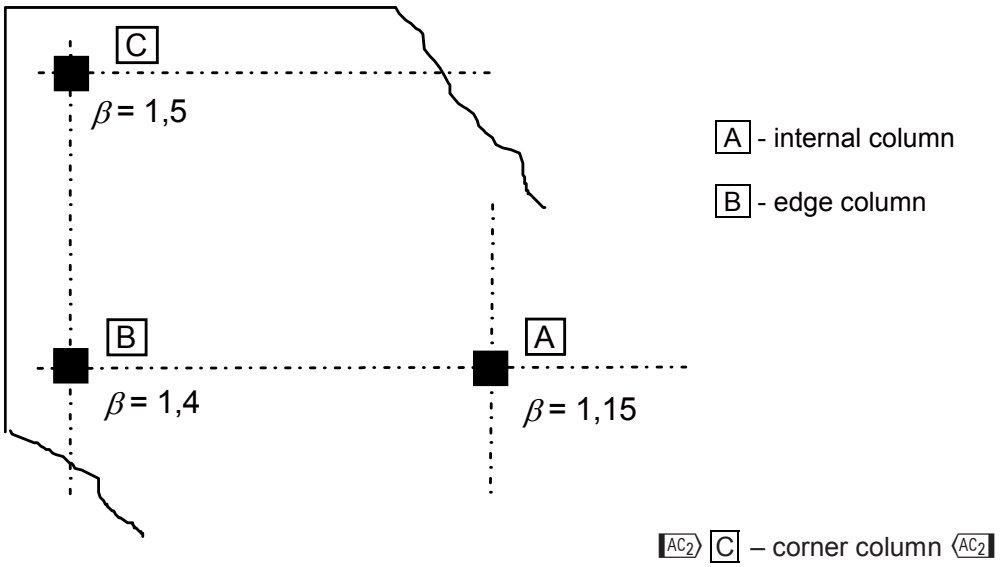

Figure 6.21N: Recommended values for β

(7) Where a concentrated load is applied close to a flat slab column support the shear force reduction according to 6.2.2 (6) and 6.2.3 (8) respectively is not valid and should not be included.

(8) The punching shear force V_{Ed} in a foundation slab may be reduced due to the favourable action of the soil pressure.

(9) The vertical component V_{pd} resulting from inclined prestressing tendons crossing the control section may be taken into account as a favourable action where relevant.

6.4.4 Punching shear resistance of slabs and column bases without shear reinforcement

(1) The punching shear resistance of a *slab* should be assessed for the basic control section according to 6.4.2. The design punching shear resistance [MPa] may be calculated as follows:

$$v_{Rd,c} = C_{Rd,c}\, k\, (100\rho_l\ f_{ck})^{1/3} + k_1\sigma_{cp} \geq \left(v_{min} + k_1\sigma_{cp}\right) \qquad (6.47)$$

where:

f_{ck} is in MPa

$$k = 1 + \sqrt{\frac{200}{d}} \leq 2{,}0 \quad d \text{ in mm}$$

$$\rho_l = \sqrt{\rho_{ly} \cdot \rho_{lz}} \leq 0{,}02$$

ρ_{ly}, ρ_{lz} relate to the bonded tension steel in y- and z- directions respectively. The values ρ_{ly} and ρ_{lz} should be calculated as mean values taking into account a slab width equal to the column width plus 3*d* each side.

$\sigma_{cp} = (\sigma_{cy} + \sigma_{cz})/2$

Licensed copy:University of Wales Trinity Saint David, 12/03/2020, Uncontrolled Copy, © BSI

Licensed copy:University of Wales Trinity Saint David, 12/03/2020, Uncontrolled Copy, © BSI

where

σ_{cy}, σ_{cz} are the normal concrete stresses in the critical section in y- and z-directions (MPa, positive if compression):

$$\sigma_{c,y} = \frac{N_{Ed,y}}{A_{cy}} \text{ and } \sigma_{c,z} = \frac{N_{Ed,z}}{A_{cz}}$$

N_{Edy}, N_{Edz} are the longitudinal forces across the full bay for internal columns and the longitudinal force across the control section for edge columns. The force may be from a load or prestressing action.

A_c is the area of concrete according to the definition of N_{Ed}

Note: The values of $C_{Rd,c}$, v_{min} and k_1 for use in a Country may be found in its National Annex. The recommended value for $C_{Rd,c}$ is $0{,}18/\gamma_c$, for v_{min} is given by Expression (6.3N) and that for k_1 is 0,1.

(2) The punching resistance of column bases should be verified at control perimeters within 2*d* from the periphery of the column.

For concentric loading the net applied force is

$$V_{Ed,red} = V_{Ed} - \Delta V_{Ed} \tag{6.48}$$

where:

V_{Ed} is the applied shear force

ΔV_{Ed} is the net upward force within the control perimeter considered i.e. upward pressure from soil minus self weight of base.

$$v_{Ed} = V_{Ed,red}/ud \tag{6.49}$$

[AC1] $$v_{Rd} = C_{Rd,c}k(100\,\rho_l f_{ck})^{1/3} \times 2d/a \geq v_{min} \times 2d/a$$ [AC1] (6.50)

where

a is the distance from the periphery of the column to the control perimeter considered

$C_{Rd,c}$ is defined in 6.4.4(1)

v_{min} is defined in 6.4.4(1)

k is defined in 6.4.4(1)

For eccentric loading

$$v_{Ed} = \frac{V_{Ed,red}}{ud}\left[1 + k\frac{M_{Ed}\,u}{V_{Ed,red}W}\right] \tag{6.51}$$

Where k is defined in 6.4.3 (3) or 6.4.3 (4) as appropriate and W is similar to W_1 but for perimeter u.

6.4.5 Punching shear resistance of slabs and column bases with shear reinforcement

[A1] (1) Where shear reinforcement is required it should be calculated in accordance with Expression (6.52):

$$v_{Rd,cs} = 0{,}75\,v_{Rd,c} + 1{,}5\,(d/s_r)\,A_{sw} f_{ywd,ef}\,[1/(u_1\,d)]\,\sin\alpha \leq k_{max} \cdot v_{Rd,c} \tag{6.52}$$

where

A_{sw} is the area of one perimeter of shear reinforcement around the column [mm2]; [A1]

Licensed copy:University of Wales Trinity Saint David, 12/03/2020, Uncontrolled Copy, © BSI

[A1] s_r is the radial spacing of perimeters of shear reinforcement [mm];
$f_{ywd,ef}$ is the effective design strength of the punching shear reinforcement according to $f_{ywd,ef} = 250 + 0{,}25\, d \leq f_{ywd}$ [MPa];
d is the mean of the effective depths in the orthogonal directions [mm];
α is the angle between the shear reinforcement and the plane of the slab;
$v_{Rd,c}$ according to 6.4.4;
k_{max} is the factor, limiting the maximum capacity that can be achieved by application of shear reinforcement.

Note: The value of k_{max} for use in a country may be found in its National Annex. The recommended value is 1,5.

If a single line of bent-down bars is provided, then the ratio d / s_r in Expression (6.52) may be given the value 0,67. [A1]

(2) Detailing requirements for punching shear reinforcement are given in 9.4.3.

(3) Adjacent to the column the punching shear resistance is limited to a maximum of:

$$v_{Ed} = \frac{\beta V_{Ed}}{u_0 d} \leq v_{Rd,max} \tag{6.53}$$

where
u_0 for an interior column [AC2] u_0 = enclosing minimum periphery [mm] [AC2]
for an edge column $u_0 = c_2 + 3d \leq c_2 + 2c_1$ [mm]
for a corner column $u_0 = 3d \leq c_1 + c_2$ [mm]
c_1, c_2 are the column dimensions as shown in Figure 6.20
[AC2] *Texts deleted* [AC2]
β see 6.4.3 (3), (4) and (5)

[AC2] **Note:** The value of $v_{Rd,max}$ for use in a Country may be found in its National Annex.The recommended value is 0,4 νf_{cd} where ν is given in Expression (6.6N).[AC2]

(4) The control perimeter at which shear reinforcement is not required, u_{out} (or $u_{out,ef}$ see Figure 6.22) should be calculated from Expression (6.54):

$$u_{out,ef} = \beta V_{Ed} / (v_{Rd,c}\, d) \tag{6.54}$$

The outermost perimeter of shear reinforcement should be placed at a distance not greater than kd within u_{out} (or $u_{out,ef}$ see Figure 6.22).

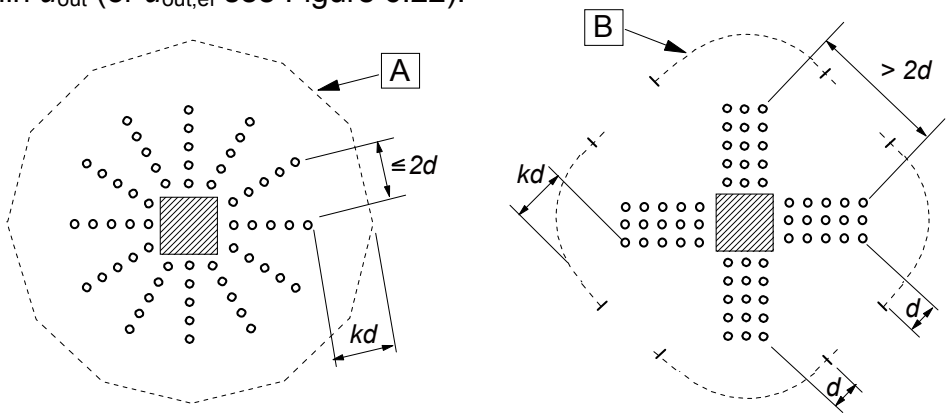

A Perimeter u_{out} B Perimeter $u_{out,ef}$

Figure 6.22: Control perimeters at internal columns

Note: The value of k for use in a Country may be found in its National Annex. The recommended value is 1,5.

(5) Where proprietary products are used as shear reinforcement, $V_{Rd,cs}$ should be determined by testing in accordance with the relevant European Technical Approval. See also 9.4.3.

6.5 Design with strut and tie models

6.5.1 General

(1)P Where a non-linear strain distribution exists (e.g. supports, near concentrated loads or plain stress) strut-and-tie models may be used (see also 5.6.4).

6.5.2 Struts

(1) The design strength for a concrete strut in a region with transverse compressive stress or no transverse stress may be calculated from Expression (6.55) (see Figure 6.23).

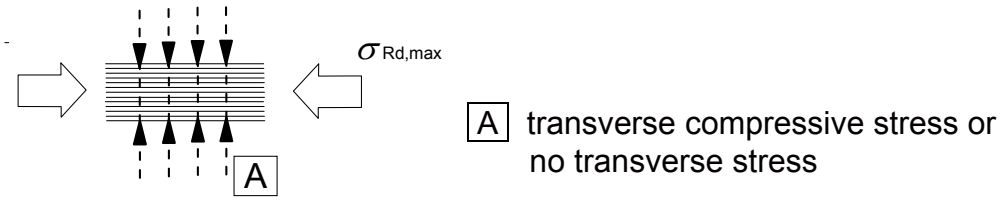

Figure 6.23: Design strength of concrete struts without transverse tension

$$\sigma_{Rd,max} = f_{cd} \tag{6.55}$$

It may be appropriate to assume a higher design strength in regions where multi-axial compression exists.

(2) The design strength for concrete struts should be reduced in cracked compression zones and, unless a more rigorous approach is used, may be calculated from Expression (6.56) (see Figure 6.24).

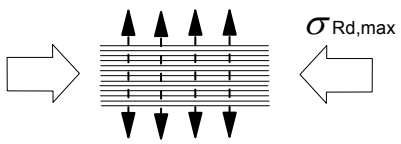

Figure 6.24: Design strength of concrete struts with transverse tension

$$\sigma_{Rd,max} = 0{,}6\,\nu' f_{cd} \tag{6.56}$$

Note: The value of ν' for use in a Country may be found in its National Annex. The recommended value is given by equation (6.57N).

$$\nu' = 1 - f_{ck}/250 \tag{6.57N}$$

(3) For struts between directly loaded areas, such as corbels or short deep beams, alternative calculation methods are given in 6.2.2 and 6.2.3.

6.5.3 Ties

(1) The design strength of transverse ties and reinforcement should be limited in accordance with 3.2 and 3.3.

(2) Reinforcement should be adequately anchored in the nodes.

Licensed copy:University of Wales Trinity Saint David, 12/03/2020, Uncontrolled Copy, © BSI

Licensed copy:University of Wales Trinity Saint David, 12/03/2020, Uncontrolled Copy, © BSI

(3) Reinforcement required to resist the forces at the concentrated nodes may be smeared over a length (see Figure 6.25 a) and b)). When the reinforcement in the node area extends over a considerable length of an element, the reinforcement should be distributed over the length where the compression trajectories are curved (ties and struts). The tensile force T may be obtained by:

a) for partial discontinuity regions $\left(b \le \frac{H}{2}\right)$, see Figure 6.25 a:

$$T = \frac{1}{4}\frac{b-a}{b}F \tag{6.58}$$

b) for full discontinuity regions $\left(b > \frac{H}{2}\right)$, see Figure 6.25 b:

$$T = \frac{1}{4}\left(1 - 0{,}7\frac{a}{h}\right)F \tag{6.59}$$

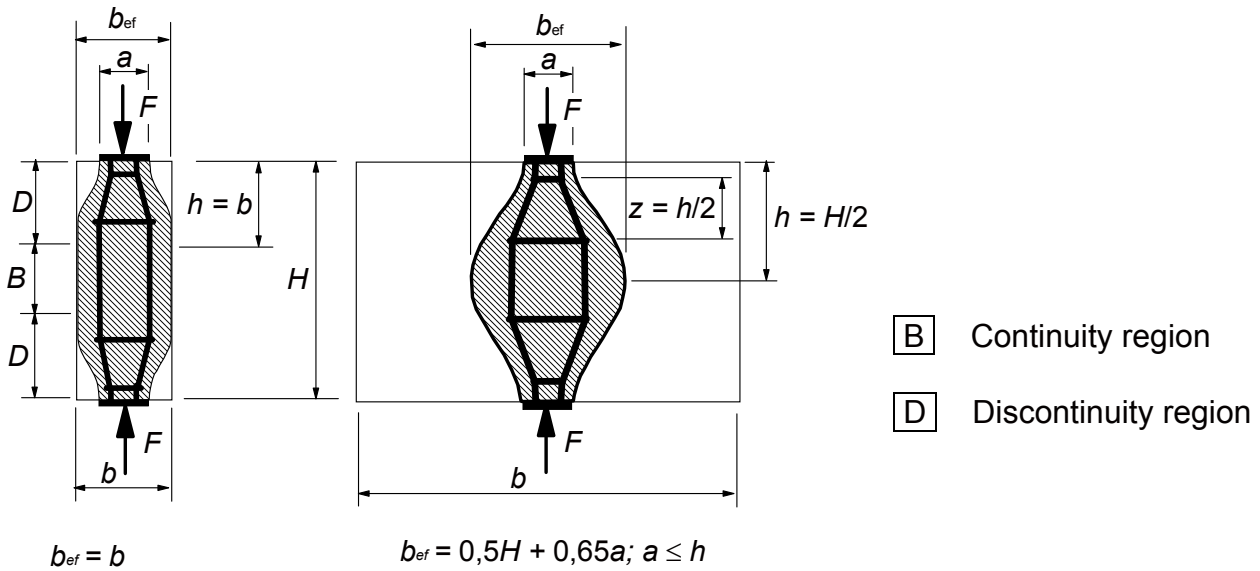

a) Partial discontinuity b) Full discontinuity

Figure 6.25: Parameters for the determination of transverse tensile forces in a compression field with smeared reinforcement

6.5.4 Nodes

(1)P The rules for nodes also apply to regions where concentrated forces are transferred in a member and which are not designed by the strut-and-tie method.

(2)P The forces acting at nodes shall be in equilibrium. Transverse tensile forces perpendicular to an in-plane node shall be considered.

(3) The dimensioning and detailing of concentrated nodes are critical in determining their load-bearing resistance. Concentrated nodes may develop, e.g. where point loads are applied, at supports, in anchorage zones with concentration of reinforcement or prestressing tendons, at bends in reinforcing bars, and at connections and corners of members.

(4) The design values for the compressive stresses within nodes may be determined by:

a) in compression nodes where no ties are anchored at the node (see Figure 6.26)

$$\sigma_{Rd,max} = k_1 \; \nu' f_{cd} \tag{6.60}$$

Note: The value of k_1 for use in a Country may be found in its National Annex. The recommended value is 1,0.

where $\sigma_{Rd,max}$ is the maximum stress which can be applied at the edges of the node. See 6.5.2 (2) for definition of ν'.

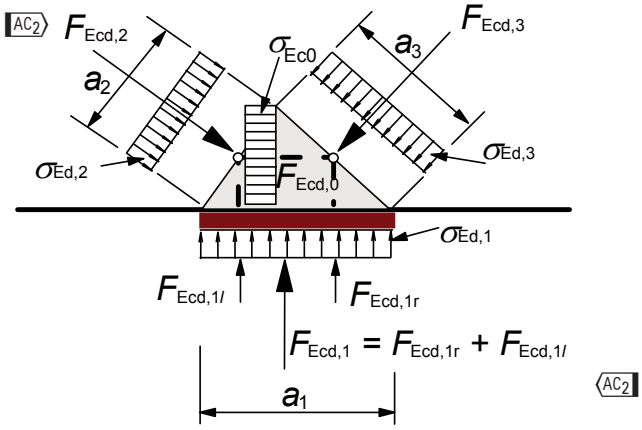

Figure 6.26: Compression node without ties

b) in compression - tension nodes with anchored ties provided in one direction (see Figure 6.27),

$$\sigma_{Rd,max} = k_2 \; \nu' \; f_{cd} \tag{6.61}$$

AC2 where $\sigma_{Rd,max}$ is the maximum of $\sigma_{Ed,1}$ and $\sigma_{Ed,2}$, See 6.5.2 (2) for definition of ν'. AC2

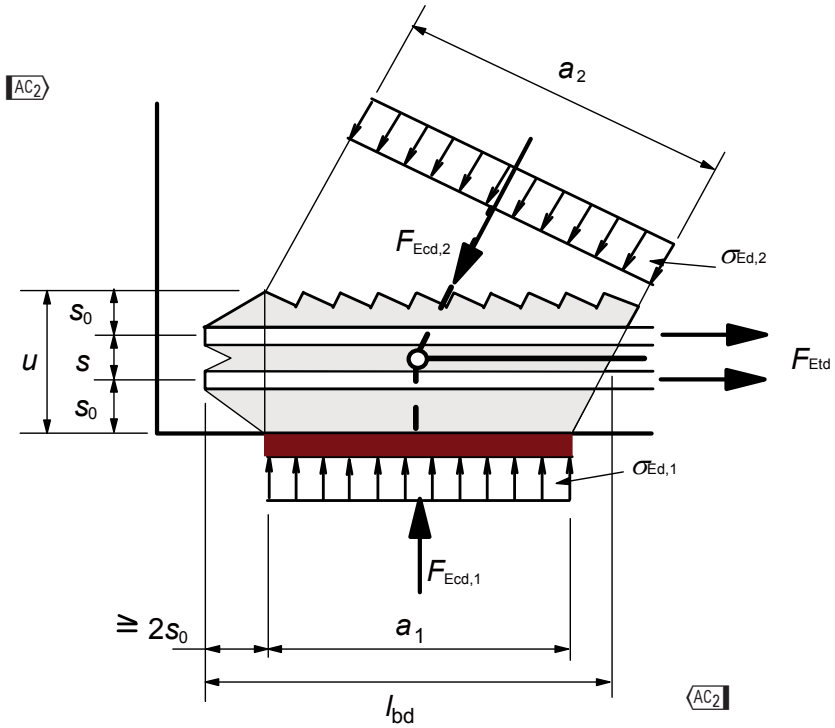

Figure 6.27: Compression tension node with reinforcement provided in one direction

Note: The value of k_2 for use in a Country may be found in its National Annex. The recommended value is 0,85.

Licensed copy:University of Wales Trinity Saint David, 12/03/2020, Uncontrolled Copy, © BSI

c) in compression - tension nodes with anchored ties provided in more than one direction (see Figure 6.28),

[AC2] where $\sigma_{Rd,max}$ is the maximum compressive stress which can be applied at the edges of the nodes. See 6.5.2 (2) for definition of ν.

Note: The values of k_1, k_2 and k_3 for use in a Country may be found in its National Annex. The recommended values are k_1 = 1,0; k_2 = 0,85 and k_3 = 0,75. [AC2]

[AC2]

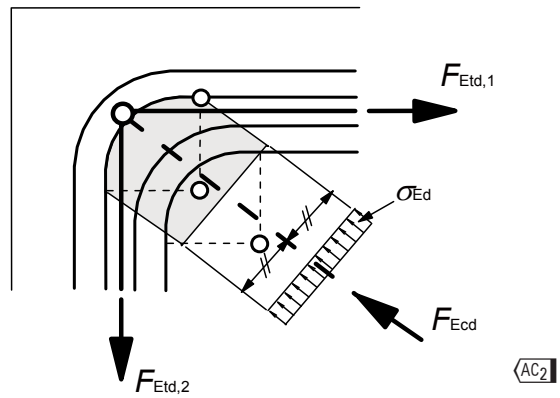

[AC2]

Figure 6.28: Compression tension node with reinforcement provided in two directions

$$\sigma_{Rd,max} = k_3\ \nu' f_{cd} \tag{6.62}$$

Note: The value of k_3 for use in a Country may be found in its National Annex. The recommended value is 0,75.

(5) Under the conditions listed below, the design compressive stress values given in 6.5.4 (4) may be increased by up to10% where at least one of the following applies:

- triaxial compression is assured,
- all angles between struts and ties are ≥ 55°,
- the stresses applied at supports or at point loads are uniform, and the node is confined by stirrups,
- the reinforcement is arranged in multiple layers,
- the node is reliably confined by means of bearing arrangement or friction.

(6) Triaxially compressed nodes may be checked according to Expression (3.24) [AC1] and (3.25) with an upper limit $\sigma_{Ed,max} \leq k_4\ \nu' f_{cd}$ if for all three directions [AC1] of the struts the distribution of load is known.

Note: The value of k_4 for use in a Country may be found in its National Annex. The recommended value is 3,0.

(7) The anchorage of the reinforcement in compression-tension nodes starts at the beginning of the node, e.g. in case of a support anchorage starting at its inner face (see Figure 6.27). The anchorage length should extend over the entire node length. In certain cases, the reinforcement may also be anchored behind the node. For anchorage and bending of reinforcement, see 8.4 to 8.6.

(8) In-plane compression nodes at the junction of three struts may be verified in accordance with Figure 6.26. The maximum average principal node stresses (σ_{c0}, σ_{c1}, σ_{c2}, σ_{c3}) should be checked in accordance with 6.5.4 (4) a). Normally the following may be assumed:
$F_{cd,1}/a_1 = F_{cd,2}/a_2 = F_{cd,3}/a_3$ resulting in $\sigma_{cd,1} = \sigma_{cd,2} = \sigma_{cd,3} = \sigma_{cd,0}$.

(9) Nodes at reinforcement bends may be analysed in accordance with Figure 6.28. The average stresses in the struts should be checked in accordance with 6.5.4 (5). The diameter of the mandrel should be checked [AC1] in accordance with 8.3. [AC1]

Licensed copy:University of Wales Trinity Saint David, 12/03/2020, Uncontrolled Copy, © BSI

Licensed copy:University of Wales Trinity Saint David, 12/03/2020, Uncontrolled Copy, © BSI

6.6 Anchorages and laps

(1)P The design bond stress is limited to a value depending on the surface characteristics of the reinforcement, the tensile strength of the concrete and confinement of surrounding concrete. This depends on cover, transverse reinforcement and transverse pressure.

(2) The length necessary for developing the required tensile force in an anchorage or lap is calculated on the basis of a constant bond stress.

(3) Application rules for the design and detailing of anchorages and laps are given in 8.4 to 8.8.

6.7 Partially loaded areas

(1)P For partially loaded areas, local crushing (see below) and transverse tension forces (see 6.5) shall be considered.

(2) For a uniform distribution of load on an area A_{c0} (see Figure 6.29) the concentrated resistance force may be determined as follows:

$$F_{Rdu} = A_{c0} \cdot f_{cd} \cdot \sqrt{A_{c1} / A_{c0}} \leq 3{,}0 \cdot f_{cd} \cdot A_{c0} \qquad (6.63)$$

where:

A_{c0} is the loaded area,

A_{c1} is the maximum design distribution area with a similar shape to A_{c0}

(3) The design distribution area A_{c1} required for the resistance force F_{Rdu} should correspond to the following conditions:

- The height for the load distribution in the load direction should correspond to the conditions given in Figure 6.29
- the centre of the design distribution area A_{c1} should be on the line of action passing through the centre of the load area A_{c0}.
- If there is more than one compression force acting on the concrete cross section, the designed distribution areas should not overlap.

The value of F_{Rdu} should be reduced if the load is not uniformly distributed on the area A_{c0} or if high shear forces exist.

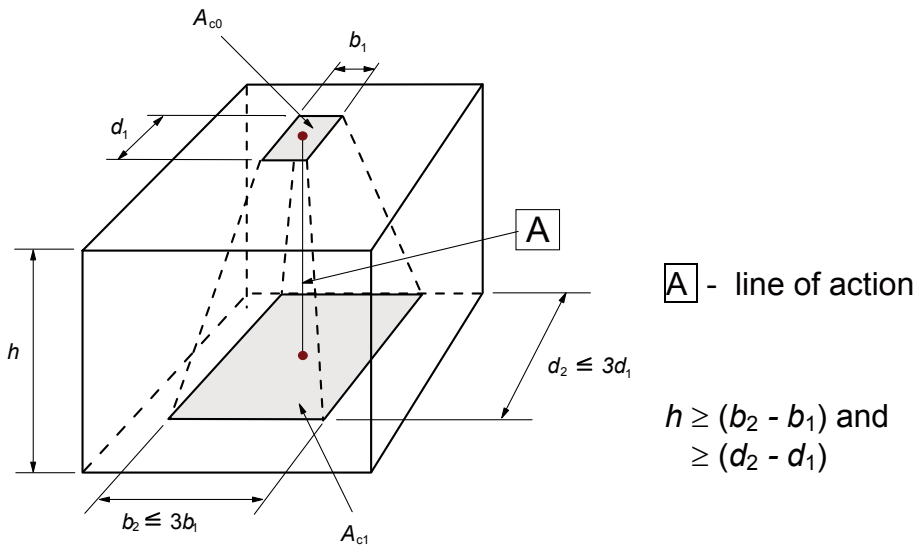

Figure 6.29: Design distribution for partially loaded areas

Licensed copy:University of Wales Trinity Saint David, 12/03/2020, Uncontrolled Copy, © BSI

(4) Reinforcement should be provided for the tensile force due to the effect of the action.

6.8 Fatigue

6.8.1 Verification conditions

(1)P The resistance of structures to fatigue shall be verified in special cases. This verification shall be performed separately for concrete and steel.

(2) A fatigue verification should be carried out for structures and structural components which are subjected to regular load cycles (e.g. crane-rails, bridges exposed to high traffic loads).

6.8.2 Internal forces and stresses for fatigue verification

(1)P The stress calculation shall be based on the assumption of cracked cross sections neglecting the tensile strength of concrete but satisfying compatibility of strains.

(2)P The effect of different bond behaviour of prestressing and reinforcing steel shall be taken into account by increasing the stress range in the reinforcing steel calculated under the assumption of perfect bond by the factor, η, given by

$$\eta = \frac{A_S + A_P}{A_S + A_P\sqrt{\xi(\phi_S / \phi_P)}} \tag{6.64}$$

where:

A_s is the area of reinforcing steel

A_P is the area of prestressing tendon or tendons

ϕ_S is the largest diameter of reinforcement

ϕ_P is the diameter or equivalent diameter of prestressing steel

$\phi_P = 1{,}6\sqrt{A_P}$ for bundles

$\phi_P = 1{,}75\ \phi_{wire}$ for single 7 wire strands where ϕ_{wire} is the wire diameter

$\phi_P = 1{,}20\ \phi_{wire}$ for single 3 wire strands where ϕ_{wire} is the wire diameter

ξ is the ratio of bond strength between bonded tendons and ribbed steel in concrete. The value is subject to the relevant European Technical Approval. In the absence of this the values given in Table 6.2 may be used.

Table 6.2: Ratio of bond strength, ξ, between tendons and reinforcing steel

prestressing steel	ξ		
	pre-tensioned	bonded, post-tensioned	
		≤ C50/60	≥ C70/85
smooth bars and wires	Not applicable	0,3	0,15
strands	0,6	0,5	0,25
indented wires	0,7	0,6	0,3
ribbed bars	0,8	0,7	0,35
Note: For intermediate values between C50/60 and C70/85 interpolation may be used.			

(3) In the design of the shear reinforcement the inclination of the compressive struts θ_{fat} may be calculated using a strut and tie model or in accordance with Expression (6.65).

$$\tan\theta_{fat} = \sqrt{\tan\theta} \leq 1{,}0 \tag{6.65}$$

where:

θ is the angle of concrete compression struts to the beam axis assumed in ULS design (see 6.2.3)

6.8.3 Combination of actions

(1)P For the calculation of the stress ranges the action shall be divided into non-cycling and fatigue-inducing cyclic actions (a number of repeated actions of load).

(2)P The basic combination of the non-cyclic load is similar to the definition of the frequent combination for SLS:

$$E_d = E\{G_{k,j}; P; \psi_{1,1}Q_{k,1}; \psi_{2,i}Q_{k,i}\} \; j \geq 1; \; i > 1 \tag{6.66}$$

The combination of actions in bracket { }, (called the basic combination), may be expressed as:

$$\sum_{j\geq 1} G_{k,j} \text{"+"} P \text{"+"} \psi_{1,1}Q_{k,1} \text{"+"} \sum_{i>1} \psi_{2,i}Q_{k,i} \tag{6.67}$$

Note: $Q_{k,1}$ and $Q_{k,I}$ are non-cyclic, non-permanent actions

(3)P The cyclic action shall be combined with the unfavourable basic combination:

$$E_d = E\{\{G_{k,j}; P; \psi_{1,1}Q_{k,1}; \psi_{2,i}Q_{k,i}\}; Q_{fat}\} \; j \geq 1; \; i > 1 \tag{6.68}$$

The combination of actions in bracket { }, (called the basic combination plus the cyclic action), can be expressed as:

$$\left(\sum_{j\geq 1} G_{k,j} \text{"+"} P \text{"+"} \psi_{1,1}Q_{k,1} \text{"+"} \sum_{i>1} \psi_{2,i}Q_{k,i}\right) \text{"+"} Q_{fat} \tag{6.69}$$

where:

Q_{fat} is the relevant fatigue load (e.g. traffic load as defined in EN 1991 or other cyclic load)

6.8.4 Verification procedure for reinforcing and prestressing steel

[AC2⟩(1) The damage of a single stress range $\Delta\sigma$ may be determined by using the corresponding S-N curves (Figure 6.30) for reinforcing and prestressing steel. The applied load should be multiplied by $\gamma_{F,fat}$. The resisting stress range at N^* cycles $\Delta\sigma_{Rsk}$ obtained should be divided by the safety factor $\gamma_{S,fat}$. ⟨AC2]

[AC2⟩ **Note 1:** The value of $\gamma_{F,fat}$ is given in 2.4.2.3 (1). ⟨AC2]

Licensed copy:University of Wales Trinity Saint David, 12/03/2020, Uncontrolled Copy, © BSI

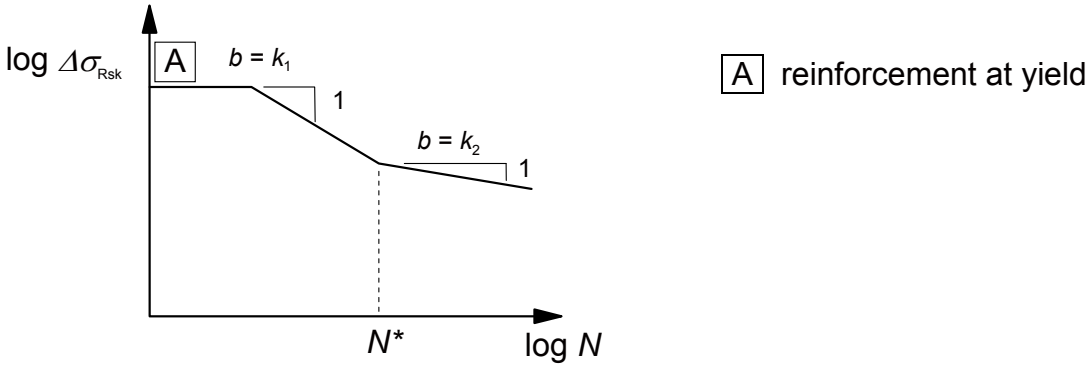

Figure 6.30: Shape of the characteristic fatigue strength curve (S-N-curves for reinforcing and prestressing steel)

Note 2: The values of parameters for reinforcing steels and prestressing steels S-N curves for use in a Country may be found in its National Annex. The recommended values are given in Table 6.3N and 6.4N which apply for reinforcing and prestressing steel respectively.

Table 6.3N: Parameters for S-N curves for reinforcing steel

Type of reinforcement	N^*	stress exponent k_1	stress exponent k_2	$\Delta\sigma_{Rsk}$ (MPa) at N^* cycles
Straight and bent bars[1]	10^6	5	9	162,5
Welded bars and wire fabrics	10^7	3	5	58,5
Splicing devices	10^7	3	5	35
Note 1: Values for $\Delta\sigma_{Rsk}$ are those for straight bars. Values for bent bars should be obtained using a reduction factor $\zeta = 0{,}35 + 0{,}026\ D/\phi$. where: D diameter of the mandrel ϕ bar diameter				

Table 6.4N: Parameters for S-N curves of prestressing steel

S-N curve of prestressing steel used for	N^*	stress exponent k_1	stress exponent k_2	$\Delta\sigma_{Rsk}$ (MPa) at N^* cycles
pre-tensioning	10^6	5	9	185
post-tensioning				
– single strands in plastic ducts	10^6	5	9	185
– straight tendons or curved tendons in plastic ducts	10^6	5	10	150
– curved tendons in steel ducts	10^6	5	7	120
– splicing devices	10^6	5	5	80

(2) For multiple cycles with variable amplitudes the damage may be added by using the Palmgren-Miner Rule. Hence, the fatigue damage factor D_{Ed} of steel caused by the relevant fatigue loads should satisfy the condition:

Licensed copy:University of Wales Trinity Saint David, 12/03/2020, Uncontrolled Copy, © BSI

$$D_{Ed} = \sum_i \frac{n(\Delta\sigma_i)}{N(\Delta\sigma_i)} < 1 \qquad (6.70)$$

where:
$n(\Delta\sigma_i)$ is the applied number of cycles for a stress range $\Delta\sigma_i$
$N(\Delta\sigma_i)$ is the resisting number of cycles for a stress range $\Delta\sigma_i$

(3)P If prestressing or reinforcing steel is exposed to fatigue loads, the calculated stresses shall not exceed the design yield strength of the steel.

(4) The yield strength should be verified by tensile tests for the steel used.

(5) When the rules of 6.8 are used to evaluate the remaining life of existing structures, or to assess the need for strengthening, once corrosion has started the stress range may be determined by reducing the stress exponent k_2 for straight and bent bars.

Note: The value of k_2 for use in a Country may be found in its National Annex. The recommended values is 5.

(6)P The stress range of welded bars shall never exceed the stress range of straight and bent bars.

6.8.5 Verification using damage equivalent stress range

(1) Instead of an explicit verification of the damage strength according to 6.8.4 the fatigue verification of standard cases with known loads (railway and road bridges) may also be performed as follows:

- by damage equivalent stress ranges for steel according to 6.8.5 (3)
- damage equivalent compression stresses for concrete according to 6.8.7

(2) The method of damage equivalent stress range consists of representing the actual operational loading by N^* cycles of a single stress range. EN 1992-2 gives relevant fatigue loading models and procedures for the calculation of the equivalent stress range $\Delta\sigma_{S,equ}$ for superstructures of road and railway bridges.

(3) For reinforcing or prestressing steel and splicing devices adequate fatigue resistance should be assumed if the Expression (6.71) is satisfied:

$$\gamma_{F,fat} \cdot \Delta\sigma_{S,equ}(N^*) \le \frac{\Delta\sigma_{Rsk}(N^*)}{\text{AC1}\ \gamma_{S,fat}\ \text{AC1}} \qquad (6.71)$$

where:

$\Delta\sigma_{Rsk}(N^*)$ is the stress range at N^* cycles from the appropriate S-N curves given in Figure 6.30.

Note: See also Tables 6.3N and 6.4N.

$\Delta\sigma_{S,equ}(N^*)$ is the damage equivalent stress range for different types of reinforcement and considering the number of loading cycles N^*. For building construction $\Delta\sigma_{S,equ}(N^*)$ may be approximated by $\Delta\sigma_{S,max}$.

$\Delta\sigma_{S,max}$ is the maximum steel stress range under the relevant load combinations

Licensed copy:University of Wales Trinity Saint David, 12/03/2020, Uncontrolled Copy, © BSI

Licensed copy:University of Wales Trinity Saint David, 12/03/2020, Uncontrolled Copy, © BSI

6.8.6 Other verifications

(1) Adequate fatigue resistance may be assumed for unwelded reinforcing bars under tension, if the stress range under frequent cyclic load combined with the basic combination is $\Delta\sigma_S \leq k_1$.

Note: The value of k_1 for use in a Country may be found in its National Annex. The recommended value is 70MPa.

[AC1⟩ For welded reinforcing bars under tension adequate fatigue resistance may be assumed if the stress range under frequent cyclic load combined with the basic combination is $\Delta\sigma_S \leq k_2$.⟨AC1]

Note: The value of k_2 for use in a Country may be found in its National Annex. The recommended value is 35MPa.

(2) As a simplification to (1)[AC1⟩ above verification may be carried out using the frequent load ⟨AC1] combination. If this is satisfied then no further checks are necessary.

(3) Where welded joints or splicing devices are used in prestressed concrete, no tension should exist in the concrete section within 200 mm of the prestressing tendons or reinforcing steel under the frequent load combination together with a reduction factor of k_3 for the mean value of prestressing force, P_m,

Note: The value of k_3 for use in a Country may be found in its National Annex. The recommended value is 0,9.

6.8.7 Verification of concrete under compression or shear

(1) A satisfactory fatigue resistance may be assumed for concrete under compression, if the following condition is fulfilled:

$$E_{cd,\max,equ} + 0{,}43\sqrt{1 - R_{equ}} \leq 1 \tag{6.72}$$

where:

$$R_{\text{equ}} = \frac{E_{\text{cd,min,equ}}}{E_{\text{cd,max,equ}}} \tag{6.73}$$

$$E_{\text{cd,min,equ}} = \frac{\sigma_{\text{cd,min,equ}}}{f_{\text{cd,fat}}} \tag{6.74}$$

$$E_{\text{cd,max,equ}} = \frac{\sigma_{\text{cd,max,equ}}}{f_{\text{cd,fat}}} \tag{6.75}$$

where :

R_{equ} is the stress ratio
$E_{cd,min,equ}$ is the minimum compressive stress level
$E_{cd,max,equ}$ is the maximum compressive stress level
$f_{\text{cd,fat}}$ is the design fatigue strength of concrete according to (6.76)
$\sigma_{\text{cd,max,equ}}$ is the upper stress of the ultimate amplitude for N cycles
$\sigma_{\text{cd,min,equ}}$ is the lower stress of the ultimate amplitude for N cycles

Note: The value of N ($\leq 10^6$ cycles) for use in a Country may be found in its National Annex. The recommended value is $N = 10^6$ cycles.

$$f_{cd,fat} = k_1 \beta_{cc}(t_0) f_{cd} \left(1 - \frac{f_{ck}}{250}\right) \tag{6.76}$$

where:

$\beta_{cc}(t_0)$ is a coefficient for concrete strength at first load application (see 3.1.2 (6))

t_0 is the time of the start of the cyclic loading on concrete in days

Note: The value of k_1 for use in a Country may be found in its National Annex. The recommended value for N = 10^6 cycles is 0,85.

(2) The fatigue verification for concrete under compression may be assumed, if the following condition is satisfied:

$$\frac{\sigma_{c,max}}{f_{cd,fat}} \leq 0{,}5 + 0{,}45 \frac{\sigma_{c,min}}{f_{cd,fat}} \tag{6.77}$$

$\leq 0{,}9$ for $f_{ck} \leq 50$ MPa

$\leq 0{,}8$ for $f_{ck} > 50$ MPa

where:

$\sigma_{c,max}$ is the maximum compressive stress at a fibre under the frequent load combination (compression measured positive)

$\sigma_{c,min}$ is the minimum compressive stress at the same fibre where $\sigma_{c,max}$ occurs. If $\sigma_{c,min}$ is a tensile stress, then $\sigma_{c,min}$ should be taken as 0.

(3) Expression (6.77) also applies to the compression struts of members subjected to shear. In this case the concrete strength $f_{cd,fat}$ should be reduced by the strength reduction factor (see 6.2.2 (6)).

(4) For members not requiring design shear reinforcement for the ultimate limit state it may be assumed that the concrete resists fatigue due to shear effects where the following apply:

- for $\frac{V_{Ed,min}}{V_{Ed,max}} \geq 0$:

$$\frac{|V_{Ed,max}|}{|V_{Rd,c}|} \leq 0{,}5 + 0{,}45 \frac{|V_{Ed,min}|}{|V_{Rd,c}|} \begin{cases} \leq 0{,}9 \text{ up to C50/60} \\ \leq 0{,}8 \text{ greater than C55/67} \end{cases} \tag{6.78}$$

- for $\frac{V_{Ed,min}}{V_{Ed,max}} < 0$:

$$\frac{|V_{Ed,max}|}{|V_{Rd,c}|} \leq 0{,}5 - \frac{|V_{Ed,min}|}{|V_{Rd,c}|} \tag{6.79}$$

where:

$V_{Ed,max}$ is the design value of the maximum applied shear force under frequent load combination

$V_{Ed,min}$ is the design value of the minimum applied shear force under frequent load combination in the cross-section where $V_{Ed,max}$ occurs

$V_{Rd,c}$ is the design value for shear-resistance according to Expression (6.2.a).

Licensed copy:University of Wales Trinity Saint David, 12/03/2020, Uncontrolled Copy, © BSI

Licensed copy:University of Wales Trinity Saint David, 12/03/2020, Uncontrolled Copy, © BSI

SECTION 7 SERVICEABILITY LIMIT STATES (SLS)

7.1 General

(1)P This section covers the common serviceability limit states. These are:

- stress limitation (see 7.2)
- crack control (see 7.3)
- deflection control (see 7.4)

Other limit states (such as vibration) may be of importance in particular structures but are not covered in this Standard.

(2) In the calculation of stresses and deflections, cross-sections should be assumed to be uncracked provided that the flexural tensile stress does not exceed $f_{ct,eff}$. The value of $f_{ct,eff}$ may be taken as f_{ctm} or $f_{ctm,fl}$ provided that the calculation for minimum tension reinforcement is also based on the same value. For the purposes of calculating crack widths and tension stiffening f_{ctm} should be used.

7.2 Stress limitation

(1)P The compressive stress in the concrete shall be limited in order to avoid longitudinal cracks, micro-cracks or high levels of creep, where they could result in unacceptable effects on the function of the structure.

(2) Longitudinal cracks may occur if the stress level under the characteristic combination of loads exceeds a critical value. Such cracking may lead to a reduction of durability. In the absence of other measures, such as an increase in the cover to reinforcement in the compressive zone or confinement by transverse reinforcement, it may be appropriate to limit the compressive stress to a value $k_1 f_{ck}$ in areas exposed to environments of exposure classes XD, XF and XS (see Table 4.1).

Note: The value of k_1 for use in a Country may be found in its National Annex. The recommended value is 0,6.

(3) If the stress in the concrete under the quasi-permanent loads is less than $k_2 f_{ck}$, linear creep may be assumed. If the stress in concrete exceeds $k_2 f_{ck}$, non-linear creep should be considered (see 3.1.4)

Note: The value of k_2 for use in a Country may be found in its National Annex. The recommended value is 0,45.

(4)P Tensile stresses in the reinforcement shall be limited in order to avoid inelastic strain, unacceptable cracking or deformation.

(5) 〖AC1〗 For the appearance unacceptable cracking or deformation 〖AC1〗 may be assumed to be avoided if, under the characteristic combination of loads, the tensile strength in the reinforcement does not exceed $k_3 f_{yk}$. Where the stress is caused by an imposed deformation, the tensile strength should not exceed $k_4 f_{yk}$. The mean value of the stress in prestressing tendons should not exceed $k_5 f_{yk}$.

Note: The values of k_3, k_4 and k_5 for use in a Country may be found in its National Annex. The recommended values are 0,8, 1 and 0,75 respectively.

Licensed copy:University of Wales Trinity Saint David, 12/03/2020, Uncontrolled Copy, © BSI

7.3 Crack control

7.3.1 General considerations

(1)P Cracking shall be limited to an extent that will not impair the proper functioning or durability of the structure or cause its appearance to be unacceptable.

(2) Cracking is normal in reinforced concrete structures subject to bending, shear, torsion or tension resulting from either direct loading or restraint or imposed deformations.

(3) Cracks may also arise from other causes such as plastic shrinkage or expansive chemical reactions within the hardened concrete. Such cracks may be unacceptably large but their avoidance and control lie outside the scope of this Section.

(4) Cracks may be permitted to form without any attempt to control their width, provided they do not impair the functioning of the structure.

(5) ⟨AC1⟩ A limiting value, w_{max}, for the calculated crack width, w_k, taking into account ⟨AC1⟩ the proposed function and nature of the structure and the costs of limiting cracking, should be established.

Note: The value of w_{max} for use in a Country may be found in its National Annex. The recommended values for relevant exposure classes are given in Table 7.1N.

Table 7.1N Recommended values of w_{max} (mm)

Exposure Class	Reinforced members and prestressed members with unbonded tendons	Prestressed members with bonded tendons
	Quasi-permanent load combination	Frequent load combination
X0, XC1	0,4[1]	0,2
XC2, XC3, XC4	0,3	0,2[2]
⟨AC2⟩ XD1, XD2, XD3, XS1, XS2, XS3 ⟨AC2⟩		Decompression
Note 1: For X0, XC1 exposure classes, crack width has no influence on durability and ⟨AC1⟩ this limit is set to give generally acceptable appearance. In the absence ⟨AC1⟩ of appearance conditions this limit may be relaxed.		
Note 2: For these exposure classes, in addition, decompression should be checked under the quasi-permanent combination of loads.		

In the absence of specific requirements (e.g. water-tightness), it may be assumed that limiting the calculated crack widths to the values of w_{max} given in Table 7.1N, under the quasi-permanent combination of loads, will generally be satisfactory for reinforced concrete members in buildings with respect to appearance and durability.

The durability of prestressed members may be more critically affected by cracking. In the absence of more detailed requirements, it may be assumed that limiting the calculated crack widths to the values of w_{max} given in Table 7.1N, under the frequent combination of loads, will generally be satisfactory for prestressed concrete members. The decompression limit requires that all parts of the bonded tendons or duct lie at least 25 mm within concrete in compression.

(6) For members with only unbonded tendons, the requirements for reinforced concrete elements apply. For members with a combination of bonded and unbonded tendons requirements for prestressed concrete members with bonded tendons apply.

Licensed copy:University of Wales Trinity Saint David, 12/03/2020, Uncontrolled Copy, © BSI

(7) Special measures may be necessary for members subjected to exposure class XD3. The choice of appropriate measures will depend upon the nature of the aggressive agent involved.

(8) When using strut-and-tie models with the struts oriented according to the compressive stress trajectories in the uncracked state, it is possible to use the forces in the ties to obtain the corresponding steel stresses to estimate the crack width (see 5.6.4 (2).

(9) Crack widths may be calculated according to 7.3.4. A simplified alternative is to limit the bar size or spacing according to 7.3.3.

7.3.2 Minimum reinforcement areas

(1)P If crack control is required, a minimum amount of bonded reinforcement is required to control cracking in areas where tension is expected. The amount may be estimated from equilibrium between the tensile force in concrete just before cracking and the tensile force in reinforcement at yielding or at ~~a~~ lower stress if necessary to limit the crack width.

(2) Unless a more rigorous calculation shows lesser areas to be adequate, the required minimum areas of reinforcement may be calculated as follows. In profiled cross sections like T-beams and box girders, minimum reinforcement should be determined for the individual parts of the section (webs, flanges).

$$A_{s,min}\sigma_s = k_c\, k\, f_{ct,eff}\, A_{ct} \tag{7.1}$$

where:

$A_{s,min}$ is the minimum area of reinforcing steel within the tensile zone

A_{ct} is the area of concrete within tensile zone. The tensile zone is that part of the section which is calculated to be in tension just before formation of the first crack

σ_s is the absolute value of the maximum stress permitted in the reinforcement immediately after formation of the crack. This may be taken as the yield strength of the reinforcement, f_{yk}. A lower value may, however, be needed to satisfy the crack width limits according to the maximum bar size or spacing (see 7.3.3 (2))

$f_{ct,eff}$ is the mean value of the tensile strength of the concrete effective at the time when the cracks may first be expected to occur:

$f_{ct,eff} = f_{ctm}$ or lower, (f_{ctm}(t)), if cracking is expected earlier than 28 days

k is the coefficient which allows for the effect of non-uniform self-equilibrating stresses, which lead to a reduction of restraint forces

= 1,0 for webs with $h \leq 300$ mm or flanges with widths less than 300 mm

= 0,65 for webs with $h \geq 800$ mm or flanges with widths greater than 800 mm

intermediate values may be interpolated

k_c is a coefficient which takes account of the stress distribution within the section immediately prior to cracking and of the change of the lever arm:

For pure tension k_c = 1,0

For bending or bending combined with axial forces:

- For rectangular sections and webs of box sections and T-sections:

$$k_c = 0{,}4 \cdot \left[1 - \frac{\sigma_c}{k_1 (h/h^*) f_{ct,eff}}\right] \leq 1 \tag{7.2}$$

- For flanges of box sections and T-sections:

$$k_c = 0{,}9\frac{F_{cr}}{A_{ct}f_{ct,eff}} \geq 0{,}5 \tag{7.3}$$

where

σ_c is the mean stress of the concrete acting on the part of the section under consideration:

$$\sigma_c = \frac{N_{Ed}}{bh} \tag{7.4}$$

N_{Ed} is the axial force at the serviceability limit state acting on the part of the cross-section under consideration (compressive force positive). N_{Ed} should be determined considering the characteristic values of prestress and axial forces under the relevant combination of actions

h^* $h^* = h$ for $h < 1{,}0$ m
$h^* = 1{,}0$ m for $h \geq 1{,}0$ m

k_1 is a coefficient considering the effects of axial forces on the stress distribution:
$k_1 = 1{,}5$ if N_{Ed} is a compressive force
$k_1 = \frac{2h^*}{3h}$ if N_{Ed} is a tensile force

F_{cr} is the absolute value of the tensile force within the flange immediately prior to cracking due to the cracking moment calculated with $f_{ct,eff}$

(3) Bonded tendons in the tension zone may be assumed to contribute to crack control within a distance ≤ 150 mm from the centre of the tendon. This may be taken into account by adding the term $\xi_1 A_p' \Delta\sigma_p$ to the left hand side of Expression (7.1),

where

A_p' is the area of pre or post-tensioned tendons within $A_{c,eff}$.

$A_{c,eff}$ is the effective area of concrete in tension surrounding the reinforcement or prestressing tendons of depth, $h_{c,ef}$, where $h_{c,ef}$ is the lesser of 2,5(h-d), (h-x)/3 or h/2 (see Figure 7.1).

ξ_1 is the adjusted ratio of bond strength taking into account the different diameters of prestressing and reinforcing steel:

$$= \sqrt{\xi \cdot \frac{\phi_s}{\phi_p}} \tag{7.5}$$

ξ ratio of bond strength of prestressing and reinforcing steel, according to Table 6.2 in 6.8.2.

ϕ_s largest bar diameter of reinforcing steel

ϕ_p equivalent diameter of tendon according to 6.8.2

If only prestressing steel is used to control cracking, $\xi_1 = \sqrt{\xi}$.

$\Delta\sigma_p$ Stress variation in prestressing tendons from the state of zero strain of the concrete at the same level

(4) In prestressed members no minimum reinforcement is required in sections where, under the characteristic combination of loads and the characteristic value of prestress, the concrete is compressed or the absolute value of the tensile stress in the concrete is below $\sigma_{ct,p}$.

Note: The value of $\sigma_{ct,p}$ for use in a Country may be found in its National Annex. The recommended value is $f_{ct,eff}$ in accordance with 7.3.2 (2).

Licensed copy:University of Wales Trinity Saint David, 12/03/2020, Uncontrolled Copy, © BSI

Licensed copy:University of Wales Trinity Saint David, 12/03/2020, Uncontrolled Copy, © BSI

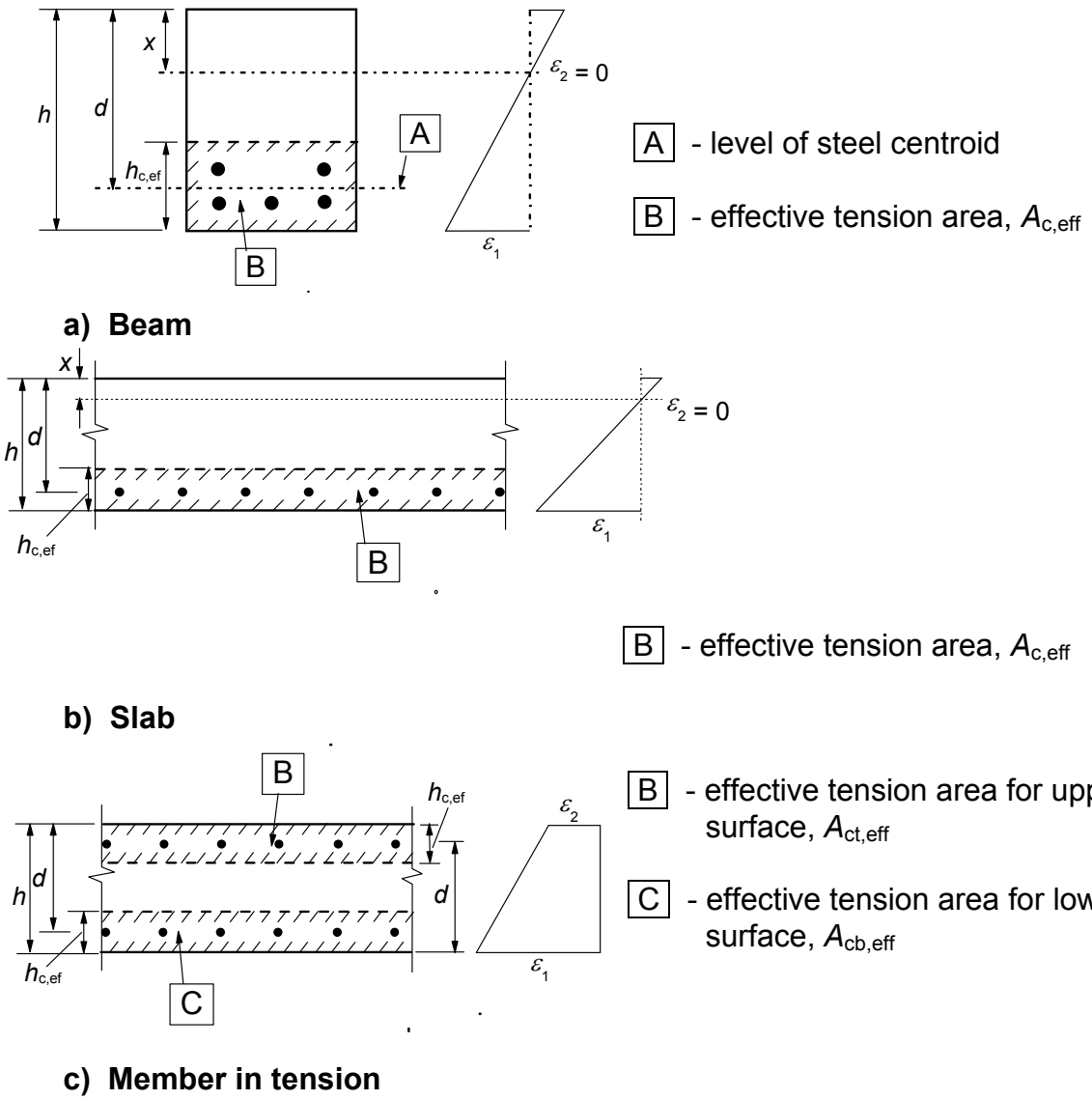

Figure 7.1: Effective tension area (typical cases)

7.3.3 Control of cracking without direct calculation

(1) For reinforced or prestressed slabs in buildings subjected to bending without significant axial tension, specific measures to control cracking are not necessary where the overall depth does not exceed 200 mm and the provisions of 9.3 have been applied.

(2) The rules given in 7.3.4 may be presented in a tabular form by restricting the bar diameter or spacing as a simplification.

Note: Where the minimum reinforcement given by 7.3.2 is provided, crack widths are unlikely to be excessive if:

- for cracking caused dominantly by restraint, the bar sizes given in Table 7.2N are not exceeded where the steel stress is the value obtained immediately after cracking (i.e. σ_s in Expression (7.1)).
- for cracks caused mainly by loading, either the provisions of Table 7.2N or the provisions of Table 7.3N are complied with. The steel stress should be calculated on the basis of a cracked section under the relevant combination of actions.

Licensed copy:University of Wales Trinity Saint David, 12/03/2020, Uncontrolled Copy, © BSI

For pre-tensioned concrete, where crack control is mainly provided by tendons with direct bond, Tables 7.2N and 7.3N may be used with a stress equal to the total stress minus prestress. For post-tensioned concrete, where crack control is provided mainly by ordinary reinforcement, the tables may be used with the stress in this reinforcement calculated with the effect of prestressing forces included.

Table 7.2N Maximum bar diameters ϕ^*_s for crack control[1]

Steel stress[2] [MPa]	Maximum bar size [mm] w_k= 0,4 mm	w_k= 0,3 mm	w_k= 0,2 mm
160	40	32	25
200	32	25	16
240	20	16	12
280	16	12	8
320	12	10	6
360	10	8	5
400	8	6	4
450	6	5	-

Notes: 1. The values in the table are based on the following assumptions:
〖AC1〗 c = 25mm; $f_{ct,eff}$ = 2,9MPa; h_{cr} = 0,5h; (h-d) = 0,1h; k_1 = 0,8; k_2 = 0,5; k_c = 0,4; k = 1,0; k_t = 0,4 and k_4= 1,0 〈AC1〗
2. Under the relevant combinations of actions

Table 7.3N Maximum bar spacing for crack control[1]

Steel stress[2] [MPa]	Maximum bar spacing [mm] w_k=0,4 mm	w_k=0,3 mm	w_k=0,2 mm
160	300	300	200
200	300	250	150
240	250	200	100
280	200	150	50
320	150	100	-
360	100	50	-

For Notes see Table 7.2N

The maximum bar diameter should be modified as follows:

Bending (at least part of section in compression):

$$\phi_s = \phi^*_s \, (f_{ct,eff}/2{,}9) \, \frac{k_c h_{cr}}{2\,(h-d)} \qquad (7.6N)$$

Tension (uniform axial tension)

$$\phi_s = \phi^*_s (f_{ct,eff}/2{,}9) h_{cr}/(8(h-d)) \qquad (7.7N)$$

where:

ϕ_s is the adjusted maximum bar diameter
ϕ^*_s is the maximum bar size given in the Table 7.2N
h is the overall depth of the section
h_{cr} is the depth of the tensile zone immediately prior to cracking, considering the characteristic values of prestress and axial forces under the quasi-permanent combination of actions
d is the effective depth to the centroid of the outer layer of reinforcement

Where all the section is under tension h - d is the minimum distance from the centroid of the layer of reinforcement to the face of the concrete (consider each face where the bar is not placed symmetrically).

Licensed copy:University of Wales Trinity Saint David, 12/03/2020, Uncontrolled Copy, © BSI

(3) Beams with a total depth of 1000 mm or more, where the main reinforcement is concentrated in only a small proportion of the depth, should be provided with additional skin reinforcement to control cracking on the side faces of the beam. This reinforcement should be evenly distributed between the level of the tension steel and the neutral axis and should be located within the links. The area of the skin reinforcement should not be less than the amount obtained from 7.3.2 (2) taking k as 0,5 and σ_s as f_{yk}. The spacing and size of suitable bars may be obtained from 7.3.4 [AC1] or a suitable simplification assuming pure tension [AC1] and a steel stress of half the value assessed for the main tension reinforcement.

(4) It should be noted that there are particular risks of large cracks occurring in sections where there are sudden changes of stress, e.g.

- at changes of section
- near concentrated loads
- positions where bars are curtailed
- areas of high bond stress, particularly at the ends of laps

Care should be taken at such areas to minimise the stress changes wherever possible. However, the rules for crack control given above will normally ensure adequate control at these points provided that the rules for detailing reinforcement given in Sections 8 and 9 are applied.

(5) Cracking due to tangential action effects may be assumed to be adequately controlled if the [AC1] detailing rules given in 9.2.2, 9.2.3, 9.3.2 and 9.4.3 are observed. [AC1]

7.3.4 Calculation of crack widths

(1) The crack width, w_k, may be calculated from Expression (7.8):

$$w_k = s_{r,max} (\varepsilon_{sm} - \varepsilon_{cm}) \tag{7.8}$$

where

$s_{r,max}$ is the maximum crack spacing

ε_{sm} is the mean strain in the reinforcement under the relevant combination of loads, including the effect of imposed deformations and taking into account the effects of tension stiffening. Only the additional tensile strain beyond the state of zero strain of the concrete at the same level is considered

ε_{cm} is the mean strain in the concrete between cracks

(2) $\varepsilon_{sm} - \varepsilon_{cm}$ may be calculated from the expression:

$$\varepsilon_{sm} - \varepsilon_{cm} = \frac{\sigma_s - k_t \dfrac{f_{ct,eff}}{\rho_{p,eff}} \left(1 + \alpha_e \rho_{p,eff}\right)}{E_s} \geq 0{,}6 \frac{\sigma_s}{E_s} \tag{7.9}$$

where:

σ_s is the stress in the tension reinforcement assuming a cracked section. For pretensioned members, σ_s may be replaced by $\Delta\sigma_p$ the stress variation in prestressing tendons from the state of zero strain of the concrete at the same level.

α_e is the ratio E_s/E_{cm}

[AC2] $\rho_{p,eff} = (A_s + \xi_1 \; A'_p)/A_{c,eff}$ [AC2] (7.10)

A_p' and $A_{c,eff}$ are as defined in 7.3.2 (3)

ξ_1 according to Expression (7.5)

k_t is a factor dependent on the duration of the load

k_t = 0,6 for short term loading
k_t = 0,4 for long term loading

(3) In situations where bonded reinforcement is fixed at reasonably close centres within the tension zone (spacing ≤ 5(c+ϕ/2), the maximum final crack spacing may be calculated from Expression (7.11) (see Figure 7.2):

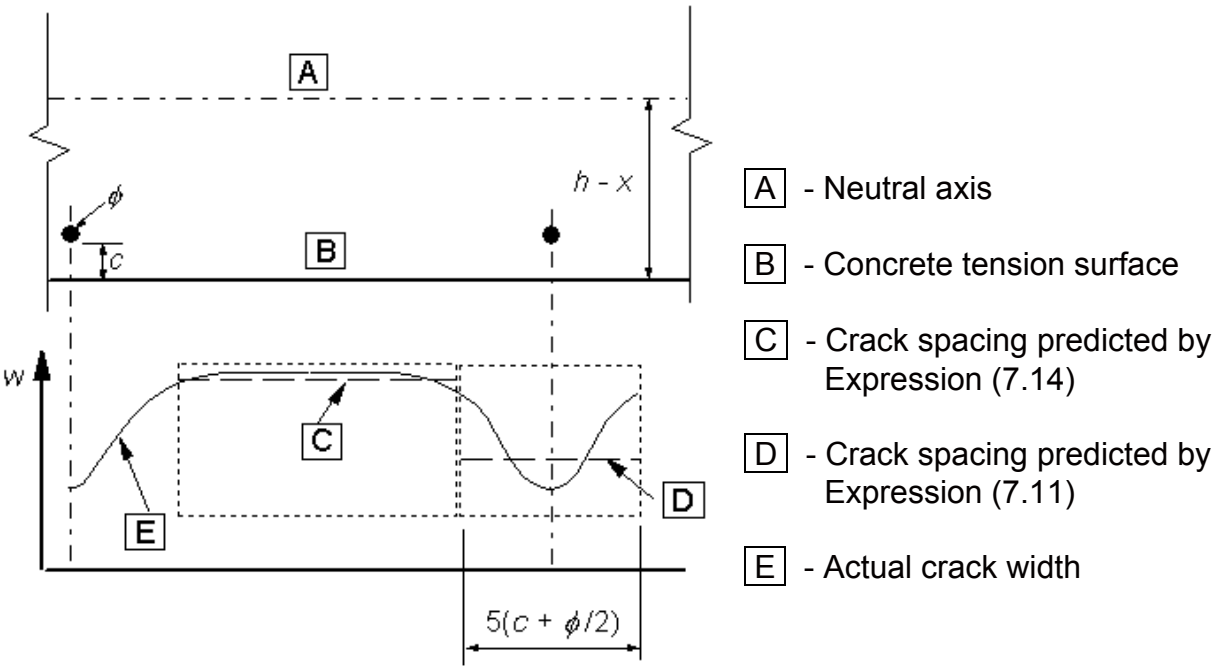

Figure 7.2: Crack width, w, at concrete surface relative to distance from bar

$$s_{r,max} = k_3 c + k_1 k_2 k_4 \phi / \rho_{p,eff} \tag{7.11}$$

where:

ϕ is the bar diameter. Where a mixture of bar diameters is used in a section, an equivalent diameter, ϕ_{eq}, should be used. For a section with n_1 bars of diameter ϕ_1 and n_2 bars of diameter ϕ_2, the following expression should be used

$$\phi_{eq} = \frac{n_1\phi_1^2 + n_2\phi_2^2}{n_1\phi_1 + n_2\phi_2} \tag{7.12}$$

c is the cover to the longitudinal reinforcement

k_1 is a coefficient which takes account of the bond properties of the bonded reinforcement:
= 0,8 for high bond bars
= 1,6 for bars with an effectively plain surface (e.g. prestressing tendons)

k_2 is a coefficient which takes account of the distribution of strain:
= 0,5 for bending
= 1,0 for pure tension
For cases of eccentric tension or for local areas, intermediate values of k_2 should be used which may be calculated from the relation:

$$\text{AC1}\rangle\ k_2 = (\varepsilon_1 + \varepsilon_2)/(2\varepsilon_1)\ \langle\text{AC1} \tag{7.13}$$

Where ε_1 is the greater and ε_2 is the lesser tensile strain at the boundaries of the section considered, assessed on the basis of a cracked section

Licensed copy:University of Wales Trinity Saint David, 12/03/2020, Uncontrolled Copy, © BSI

Note: The values of k_3 and k_4 for use in a Country may be found in its National Annex. The recommended values are 3,4 and 0,425 respectively.

Where the spacing of the bonded reinforcement exceeds $5(c+\phi/2)$ (see Figure 7.2) or where there is no bonded reinforcement within the tension zone, an upper bound to the crack width may be found by assuming a maximum crack spacing:

$$s_{r,max} = 1{,}3\ (h - x) \tag{7.14}$$

(4) Where the angle between the axes of principal stress and the direction of the reinforcement, for members reinforced in two orthogonal directions, is significant (>15°), then the crack spacing $s_{r,max}$ may be calculated from the following expression:

$$s_{r,max} = \frac{1}{\dfrac{\cos\theta}{s_{r,max,y}} + \dfrac{\sin\theta}{s_{r,max,z}}} \tag{7.15}$$

where:

θ is the angle between the reinforcement in the y direction and the direction of the principal tensile stress

$s_{r,max,y}$ $s_{r,max,z}$ are the crack spacings calculated in the y and z directions respectively, according to 7.3.4 (3)

(5) For walls subjected to early thermal contraction where the horizontal steel area, A_s does not fulfil the requirements of 7.3.2 and where the bottom of the wall is restrained by a previously cast base, $s_{r,max}$ may be assumed to be equal to 1,3 times the height of the wall.

Note: Where simplified methods of calculating crack width are used they should be based on the properties given in this Standard or substantiated by tests.

7.4 Deflection control

7.4.1 General considerations

(1)P The deformation of a member or structure shall not be such that it adversely affects its proper functioning or appearance.

(2) Appropriate limiting values of deflection taking into account the nature of the structure, of the finishes, partitions and fixings and upon the function of the structure should be established.

(3) Deformations should not exceed those that can be accommodated by other connected elements such as partitions, glazing, cladding, services or finishes. In some cases limitation may be required to ensure the proper functioning of machinery or apparatus supported by the structure, or to avoid ponding on flat roofs.

Note: The limiting deflections given in (4) and (5) below are derived from ISO 4356 and should generally result in satisfactory performance of buildings such as dwellings, offices, public buildings or factories. Care should be taken to ensure that the limits are appropriate for the particular structure considered and that that there are no special requirements. Further information on deflections and limiting values may be obtained from ISO 4356.

(4) The appearance and general utility of the structure could be impaired when the calculated sag of a beam, slab or cantilever subjected to quasi-permanent loads exceeds span/250. The sag is assessed relative to the supports. Pre-camber may be used to compensate for some or

Licensed copy:University of Wales Trinity Saint David, 12/03/2020, Uncontrolled Copy, © BSI

Licensed copy:University of Wales Trinity Saint David, 12/03/2020, Uncontrolled Copy, © BSI

all of the deflection but any upward deflection incorporated in the formwork should not generally exceed span/250.

(5) Deflections that could damage adjacent parts of the structure should be limited. For the deflection after construction, span/500 is normally an appropriate limit for quasi-permanent loads. Other limits may be considered, depending on the sensitivity of adjacent parts.

(6) The limit state of deformation may be checked by either:
- by limiting the span/depth ratio, according to 7.4.2 or
- by comparing a calculated deflection, according to 7.4.3, with a limit value

Note: The actual deformations may differ from the estimated values, particularly if the values of applied moments are close to the cracking moment. The differences will depend on the dispersion of the material properties, on the environmental conditions, on the load history, on the restraints at the supports, ground conditions, etc.

7.4.2 Cases where calculations may be omitted

(1)P Generally, it is not necessary to calculate the deflections explicitly as simple rules, for example limits to span/depth ratio may be formulated, which will be adequate for avoiding deflection problems in normal circumstances. More rigorous checks are necessary for members which lie outside such limits, or where deflection limits other than those implicit in simplified methods are appropriate.

(2) Provided that reinforced concrete beams or slabs in buildings are dimensioned so that they comply with the limits of span to depth ratio given in this clause, their deflections may be considered as not exceeding the limits set out in 7.4.1 (4) and (5). The limiting span/depth ratio may be estimated using Expressions (7.16.a) and (7.16.b) and multiplying this by correction factors to allow for the type of reinforcement used and other variables. No allowance has been made for any pre-camber in the derivation of these Expressions.

$$\frac{l}{d} = K\left[11 + 1{,}5\sqrt{f_{ck}}\,\frac{\rho_0}{\rho} + 3{,}2\sqrt{f_{ck}}\left(\frac{\rho_0}{\rho} - 1\right)^{3/2}\right] \quad \text{if } \rho \le \rho_0 \qquad (7.16.a)$$

$$\frac{l}{d} = K\left[11 + 1{,}5\sqrt{f_{ck}}\,\frac{\rho_0}{\rho - \rho'} + \frac{1}{12}\sqrt{f_{ck}}\sqrt{\frac{\rho'}{\rho_0}}\right] \quad \text{if } \rho > \rho_0 \qquad (7.16.b)$$

where:

l/d is the limit span/depth

K is the factor to take into account the different structural systems

[AC1] ρ_0 is the reference reinforcement ratio = $10^{-3}\sqrt{f_{ck}}$ [AC1]

ρ is the required tension reinforcement ratio at mid-span to resist the moment due to the design loads (at support for cantilevers)

ρ' is the required compression reinforcement ratio at mid-span to resist the moment due to design loads (at support for cantilevers)

f_{ck} is in MPa units

Expressions (7.16.a) and (7.16.b) have been derived on the assumption that the steel stress, under the appropriate design load at SLS at a cracked section at the mid-span of a beam or slab or at the support of a cantilever, is 310 MPa, (corresponding roughly to f_{yk} = 500 MPa).

Licensed copy:University of Wales Trinity Saint David, 12/03/2020, Uncontrolled Copy, © BSI

Where other stress levels are used, the values obtained using Expression (7.16) should be multiplied by $310/\sigma_s$. It will normally be conservative to assume that:

$$310 / \sigma_s = 500 /(f_{yk} A_{s,req} / A_{s,prov}) \quad (7.17)$$

where:

σ_s is the tensile steel stress at mid-span (at support for cantilevers) under the design load at SLS

$A_{s,prov}$ is the area of steel provided at this section

$A_{s,req}$ is the area of steel required at this section for ultimate limit state

For flanged sections where the ratio of the flange breadth to the rib breadth exceeds 3, the values of l/d given by Expression (7.16) should be multiplied by 0,8.

For beams and slabs, other than flat slabs, with spans exceeding 7 m, which support partitions liable to be damaged by excessive deflections, the values of l/d given by Expression (7.16) should be multiplied by $7 / l_{eff}$ (l_{eff} in metres, see 5.3.2.2 (1)).

For flat slabs where the greater span exceeds 8,5 m, and which support partitions liable to be damaged by excessive deflections, the values of l/d given by Expression (7.16) should be multiplied by $8,5 / l_{eff}$ (l_{eff} in metres).

[AC2⟩**Note:** Values of K for use in a Country may be found in its National Annex. Recommended values of K are given in Table 7.4N. Values obtained using Expression (7.16) for common cases (C30/37, σ_s = 310 MPa, different structural systems and reinforcement ratios ρ = 0,5 % and ρ = 1,5 %) are also given. ⟨AC2]

Table 7.4N: Basic ratios of span/effective depth for reinforced concrete members without axial compression

Structural System	K	Concrete highly stressed ρ = 1,5%	Concrete lightly stressed ρ = 0,5%
Simply supported beam, one- or two-way spanning simply supported slab	1,0	14	20
End span of continuous beam or one-way continuous slab or two-way spanning slab continuous over one long side	1,3	18	26
Interior span of beam or one-way or two-way spanning slab	1,5	20	30
Slab supported on columns without beams (flat slab) (based on longer span)	1,2	17	24
Cantilever	0,4	6	8

Note 1: The values given have been chosen to be generally conservative and calculation may frequently show that thinner members are possible.
Note 2: For 2-way spanning slabs, the check should be carried out on the basis of the shorter span. For flat slabs the longer span should be taken.
Note 3: The limits given for flat slabs correspond to a less severe limitation than a mid-span deflection of span/250 relative to the columns. Experience has shown this to be satisfactory.

The values given by Expression (7.16) and Table 7.4N have been derived from results of a parametric study made for a series of beams or slabs simply supported with rectangular cross section, using the general

approach given in 7.4.3. Different values of concrete strength class and a 500 MPa characteristic yield strength were considered. For a given area of tension reinforcement the ultimate moment was calculated and the quasi-permanent load was assumed as 50% of the corresponding total design load. The span/depth limits obtained satisfy the limiting deflection given in 7.4.1(5).

7.4.3 Checking deflections by calculation

(1)P Where a calculation is deemed necessary, the deformations shall be calculated under load conditions which are appropriate to the purpose of the check.

(2)P The calculation method adopted shall represent the true behaviour of the structure under relevant actions to an accuracy appropriate to the objectives of the calculation.

(3) Members which are not expected to be loaded above the level which would cause the tensile strength of the concrete to be exceeded anywhere within the member should be considered to be uncracked. Members which are expected to crack, but may not be fully cracked, will behave in a manner intermediate between the uncracked and fully cracked conditions and, for members subjected mainly to flexure, an adequate prediction of behaviour is given by Expression (7.18):

$$\alpha = \zeta\alpha_{II} + (1 - \zeta)\alpha_{I} \tag{7.18}$$

where

α is the deformation parameter considered which may be, for example, a strain, a curvature, or a rotation. (As a simplification, α may also be taken as a deflection - see (6) below)

α_{I}, α_{II} are the values of the parameter calculated for the uncracked and fully cracked conditions respectively

ζ is a distribution coefficient (allowing for tensioning stiffening at a section) given by Expression (7.19):

$$\zeta = 1 - \beta\left(\frac{\sigma_{sr}}{\sigma_{s}}\right)^{2} \tag{7.19}$$

ζ = 0 for uncracked sections

β is a coefficient taking account of the influence of the duration of the loading or of repeated loading on the average strain

= 1,0 for a single short-term loading

= 0,5 for sustained loads or many cycles of repeated loading

σ_{s} is the stress in the tension reinforcement calculated on the basis of a cracked section

σ_{sr} is the stress in the tension reinforcement calculated on the basis of a cracked section under the loading conditions causing first cracking

Note: σ_{sr}/σ_{s} may be replaced by M_{cr}/M for flexure or N_{cr}/N for pure tension, where M_{cr} is the cracking moment and N_{cr} is the cracking force.

(4) Deformations due to loading may be assessed using the tensile strength and the effective modulus of elasticity of the concrete (see (5)).

Licensed copy:University of Wales Trinity Saint David, 12/03/2020, Uncontrolled Copy, © BSI

Licensed copy:University of Wales Trinity Saint David, 12/03/2020, Uncontrolled Copy, © BSI

Table 3.1 indicates the range of likely values for tensile strength. In general, the best estimate of the behaviour will be obtained if f_{ctm} is used. Where it can be shown that there are no axial tensile stresses (e.g. those caused by shrinkage or thermal effects) the flexural tensile strength, $f_{ctm,fl}$, (see 3.1.8) may be used.

(5) For loads with a duration causing creep, the total deformation including creep may be calculated by using an effective modulus of elasticity for concrete according to Expression (7.20):

$$E_{c,eff} = \frac{E_{cm}}{1+\varphi(\infty,t_0)} \tag{7.20}$$

where:

[AC1] $\varphi(\infty,t_0)$ is the creep coefficient relevant for the load and time interval (see 3.1.4) [AC1]

(6) Shrinkage curvatures may be assessed using Expression (7.21):

$$\frac{1}{r_{cs}} = \varepsilon_{cs}\alpha_e \frac{S}{I} \tag{7.21}$$

where:

$1/r_{cs}$ is the curvature due to shrinkage
ε_{cs} is the free shrinkage strain (see 3.1.4)
S is the first moment of area of the reinforcement about the centroid of the section
I is the second moment of area of the section
α_e is the effective modular ratio
$\alpha_e = E_s / E_{c,eff}$

S and I should be calculated for the uncracked condition and the fully cracked condition, the final curvature being assessed by use of Expression (7.18).

(7) The most rigorous method of assessing deflections using the method given in (3) above is to compute the curvatures at frequent sections along the member and then calculate the deflection by numerical integration. In most cases it will be acceptable to compute the deflection twice, assuming the whole member to be in the uncracked and fully cracked condition in turn, and then interpolate using Expression (7.18).

Note: Where simplified methods of calculating deflections are used they should be based on the properties given in this Standard and substantiated by tests.

Licensed copy:University of Wales Trinity Saint David, 12/03/2020, Uncontrolled Copy, © BSI

SECTION 8 DETAILING OF REINFORCEMENT AND PRESTRESSING TENDONS - GENERAL

8.1 General

(1)P The rules given in this Section apply to ribbed reinforcement, mesh and prestressing tendons subjected predominantly to static loading. They are applicable for normal buildings and bridges. They may not be sufficient for:

- elements subjected to dynamic loading caused by seismic effects or machine vibration, impact loading and
- to elements incorporating specially painted, epoxy or zinc coated bars.

Additional rules are provided for large diameter bars.

(2)P The requirements concerning minimum concrete cover shall be satisfied (see 4.4.1.2).

(3) For lightweight aggregate concrete, supplementary rules are given in Section 11.

(4) Rules for structures subjected to fatigue loading are given in 6.8.

8.2 Spacing of bars

(1)P The spacing of bars shall be such that the concrete can be placed and compacted satisfactorily for the development of adequate bond.

(2) The clear distance (horizontal and vertical) between individual parallel bars or horizontal layers of parallel bars should be not less than the maximum of k_1 ·bar diameter, (d_g + k_2 mm) or 20 mm where d_g is the maximum size of aggregate.

Note: The value of k_1 and k_2 for use in a Country may be found in its National Annex. The recommended values are 1 and 5 mm respectively.

(3) Where bars are positioned in separate horizontal layers, the bars in each layer should be located vertically above each other. There should be sufficient space between the resulting columns of bars to allow access for vibrators and good compaction of the concrete.

(4) Lapped bars may be allowed to touch one another within the lap length. See 8.7 for more details.

8.3 Permissible mandrel diameters for bent bars

(1)P The minimum diameter to which a bar is bent shall be such as to avoid bending cracks in the bar, and to avoid failure of the concrete inside the bend of the bar.

(2) In order to avoid damage to the reinforcement the diameter to which the bar is bent (Mandrel diameter) should not be less than $\phi_{m,min}$.

Note: The values of $\phi_{m,min}$ for use in a Country may be found in its National Annex. The recommended values are given in Table 8.1N.

Licensed copy:University of Wales Trinity Saint David, 12/03/2020, Uncontrolled Copy, © BSI

Table 8.1N: Minimum mandrel diameter to avoid damage to reinforcement

a) for bars and wire

Bar diameter	Minimum mandrel diameter for bends, hooks and loops (see Figure 8.1)
$\phi \leq 16$ mm	4ϕ
$\phi > 16$ mm	7ϕ

b) for welded bent reinforcement and mesh bent after welding

Minimum mandrel diameter	
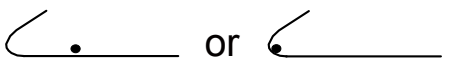	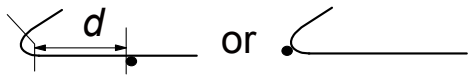
5ϕ	$d \geq 3\phi$: 5ϕ $d < 3\phi$ or welding within the curved zone: 20ϕ
Note: The mandrel size for welding within the curved zone may be reduced to 5ϕ [AC1] where the welding is carried out in accordance with [AC2] EN ISO 17660.[AC2] [AC1]	

[AC2] (3) The mandrel diameter need not be checked to avoid concrete failure if the following conditions exist:

- either the anchorage of the bar does not require a length more than 5ϕ past the end of the bend or the bar is not positioned at the edge (plane of bend close to concrete face) and there is a cross bar diameter $\geq \phi$ inside the bend. [AC2]
- the mandrel diameter is at least equal to the recommended values given in Table 8.1N.

Otherwise the mandrel diameter, $\phi_{m,min}$, should be increased in accordance with Expression (8.1)

$$\phi_{m,min} \geq F_{bt}\left((1/a_b) + 1/(2\phi)\right) / f_{cd} \qquad (8.1)$$

where:

F_{bt} is the tensile force from ultimate loads in a bar or group of bars in contact at the start of a bend

a_b for a given bar (or group of bars in contact) is half of the centre-to-centre distance between bars (or groups of bars) perpendicular to the plane of the bend. For a bar or group of bars adjacent to the face of the member, a_b should be taken as the cover plus $\phi/2$

The value of f_{cd} should not be taken greater than that for concrete class C55/67.

8.4 Anchorage of longitudinal reinforcement

8.4.1 General

(1)P Reinforcing bars, wires or welded mesh fabrics shall be so anchored that the bond forces are safely transmitted to the concrete avoiding longitudinal cracking or spalling. Transverse reinforcement shall be provided if necessary.

(2) Methods of anchorage are shown in Figure 8.1 (see also 8.8 (3)).

Licensed copy:University of Wales Trinity Saint David, 12/03/2020, Uncontrolled Copy, © BSI

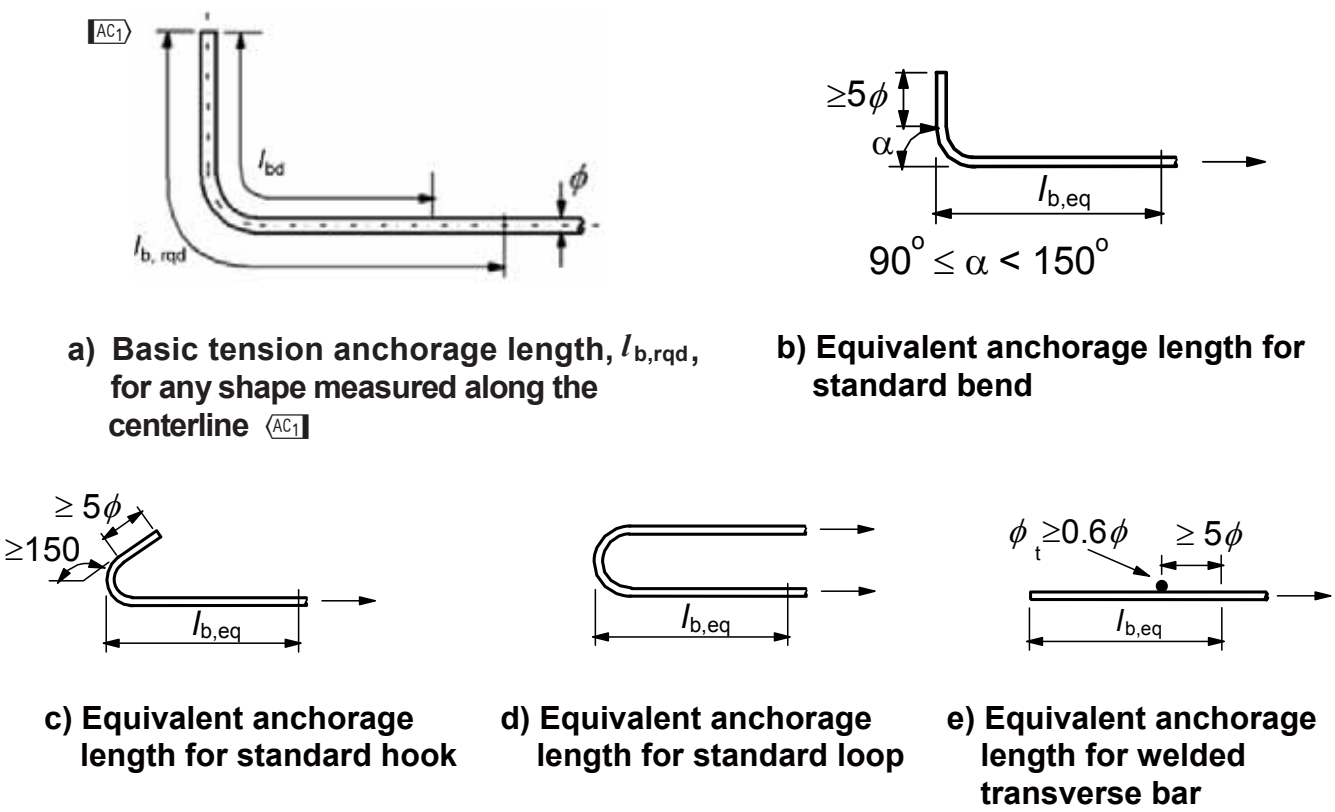

Figure 8.1: Methods of anchorage other than by a straight bar

(3) Bends and hooks do not contribute to compression anchorages.

(4) Concrete failure inside bends should be prevented by complying with 8.3 (3).

(5) Where mechanical devices are used the test requirements should be in accordance with the relevant product standard or a European Technical Approval.

(6) For the transmission of prestressing forces to the concrete, see 8.10.

8.4.2 Ultimate bond stress

(1)P The ultimate bond strength shall be sufficient to prevent bond failure.

(2) The design value of the ultimate bond stress, f_{bd}, for ribbed bars may be taken as:

$$f_{bd} = 2{,}25\ \eta_1\ \eta_2\ f_{ctd} \qquad (8.2)$$

where:

f_{ctd} is the design value of concrete tensile strength according to 3.1.6 (2)P. Due to the increasing brittleness of higher strength concrete, $f_{ctk,0,05}$ should be limited here to the value for C60/75, unless it can be verified that the average bond strength increases above this limit

η_1 is a coefficient related to the quality of the bond condition and the position of the bar during concreting (see Figure 8.2):
η_1 = 1,0 when 'good' conditions are obtained and

η_1 = 0,7 for all other cases and for bars in structural elements built with slip-forms, unless it can be shown that 'good' bond conditions exist

η_2 is related to the bar diameter:

η_2 = 1,0 for $\phi \leq 32$ mm

$\eta_2 = (132 - \phi)/100$ for $\phi > 32$ mm

AC2

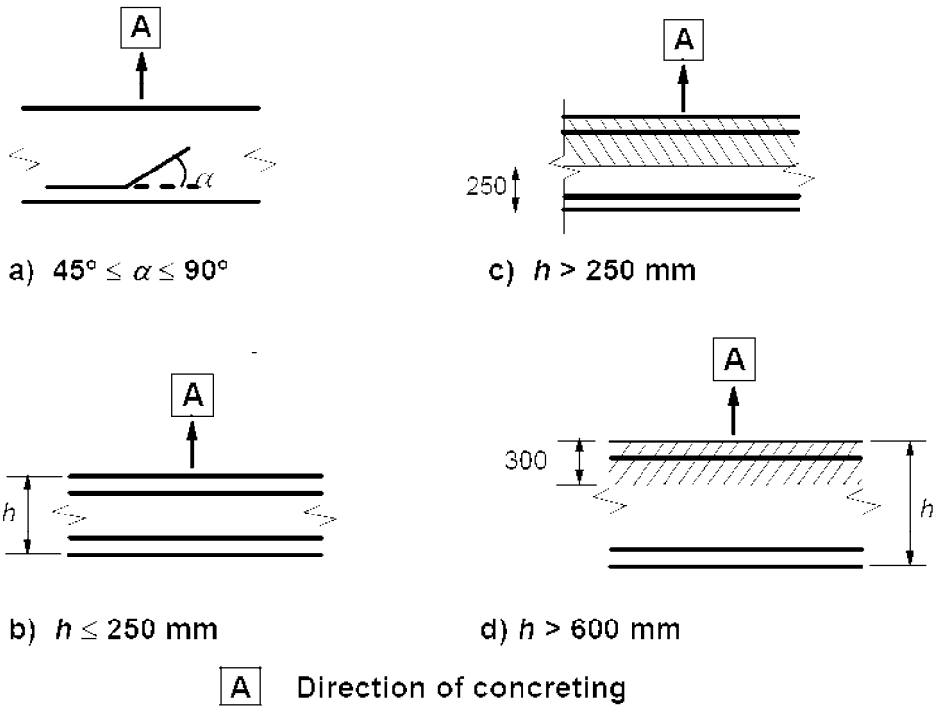

AC2

Figure 8.2: Description of bond conditions

8.4.3 Basic anchorage length

(1)P The calculation of the required anchorage length shall take into consideration the type of steel and bond properties of the bars.

(2) The basic required anchorage length, $l_{b,rqd}$, for anchoring the force $A_s.\sigma_{sd}$ in a straight bar assuming constant bond stress equal to f_{bd} follows from:

$$l_{b,rqd} = (\phi / 4)\ (\sigma_{sd} / f_{bd}) \qquad (8.3)$$

Where σ_{sd} is the design stress of the bar at the position from where the anchorage is measured from.

Values for f_{bd} are given in 8.4.2.

AC1 (3) For bent bars the basic required anchorage length, $l_{b,rqd}$, and the design length, l_{bd}, should be measured along the centre-line of the bar (see Figure 8.1a). AC1

(4) Where pairs of wires/bars form welded fabrics the diameter, ϕ, in Expression (8.3) should be replaced by the equivalent diameter $\phi_n = \phi\sqrt{2}$.

Licensed copy:University of Wales Trinity Saint David, 12/03/2020, Uncontrolled Copy, © BSI

Licensed copy:University of Wales Trinity Saint David, 12/03/2020, Uncontrolled Copy, © BSI

8.4.4 Design anchorage length

(1) The design anchorage length, l_{bd}, is:

$$l_{bd} = \alpha_1\ \alpha_2\ \alpha_3\ \alpha_4\ \alpha_5\ \ l_{b,rqd} \geq l_{b,min} \qquad (8.4)$$

where α_1 , α_2 , α_3, α_4 and α_5 are coefficients given in Table 8.2:

α_1 is for the effect of the form of the bars assuming adequate cover (see Figure 8.1).

α_2 is for the effect of concrete minimum cover (see Figure 8.3)

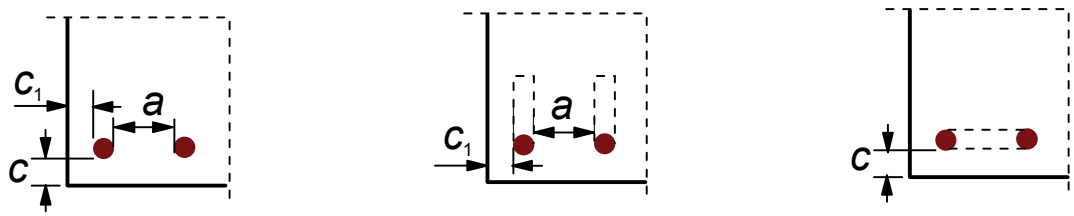

a) Straight bars c_d = min (a/2, c_1, c)

b) Bent or hooked bars c_d = min (a/2, c_1)

c) Looped bars c_d = c

Figure 8.3: Values of c_d for beams and slabs

α_3 is for the effect of confinement by transverse reinforcement

α_4 is for the influence of one or more welded transverse bars ($\phi_t > 0{,}6\phi$) along the design anchorage length l_{bd} (see also 8.6)

α_5 is for the effect of the pressure transverse to the plane of splitting along the design anchorage length

The product $(\alpha_2\alpha_3\alpha_5) \geq 0{,}7$ (8.5)

$l_{b,rqd}$ is taken from Expression (8.3)

$l_{b,min}$ is the minimum anchorage length if no other limitation is applied:

AC1 - for anchorages in tension: $l_{b,min} \geq \max\{0{,}3 l_{b,rqd};\ 10\varphi;\ 100\text{ mm}\}$ (8.6)

- for anchorages in compression: $l_{b,min} \geq \max\{0{,}6 l_{b,rqd};\ 10\varphi;\ 100\text{ mm}\}$ AC1 (8.7)

(2) As a simplified alternative to 8.4.4 (1) the tension anchorage of certain shapes shown in Figure 8.1 may be provided as an equivalent anchorage length, $l_{b,eq}$. $l_{b,eq}$ is defined in this figure and may be taken as:

- $\alpha_1\, l_{b,rqd}$ for shapes shown in Figure 8.1b to 8.1d (see Table 8.2 for values of α_1)
- $\alpha_4\, l_{b,rqd}$ for shapes shown in Figure 8.1e (see Table 8.2 for values of α_4).

where

α_1 and α_4 are defined in (1)

$l_{b,rqd}$ is calculated from Expression (8.3)

Licensed copy:University of Wales Trinity Saint David, 12/03/2020, Uncontrolled Copy, © BSI

Table 8.2: Values of α_1, α_2, α_3, α_4 and α_5 coefficients

Influencing factor	Type of anchorage	Reinforcement bar	
		In tension	In compression
Shape of bars	Straight	$\alpha_1 = 1{,}0$	$\alpha_1 = 1{,}0$
	Other than straight (see Figure 8.1 (b), (c) and (d)	$\alpha_1 = 0{,}7$ if $c_d > 3\phi$ otherwise $\alpha_1 = 1{,}0$ (see Figure 8.3 for values of c_d)	$\alpha_1 = 1{,}0$
Concrete cover	Straight	$\alpha_2 = 1 - 0{,}15\,(c_d - \phi)/\phi$ $\geq 0{,}7$ $\leq 1{,}0$	$\alpha_2 = 1{,}0$
	Other than straight (see Figure 8.1 (b), (c) and (d))	$\alpha_2 = 1 - 0{,}15\,(c_d - 3\phi)/\phi$ $\geq 0{,}7$ $\leq 1{,}0$ (see Figure 8.3 for values of c_d)	$\alpha_2 = 1{,}0$
Confinement by transverse reinforcement not welded to main reinforcement	All types	$\alpha_3 = 1 - K\lambda$ $\geq 0{,}7$ $\leq 1{,}0$	$\alpha_3 = 1{,}0$
Confinement by welded transverse reinforcement*	All types, position and size as specified in Figure 8.1 (e)	$\alpha_4 = 0{,}7$	$\alpha_4 = 0{,}7$
Confinement by transverse pressure	All types	$\alpha_5 = 1 - 0{,}04p$ $\geq 0{,}7$ $\leq 1{,}0$	-

where:

λ = $(\Sigma A_{st} - \Sigma A_{st,min})/ A_s$

ΣA_{st} cross-sectional area of the transverse reinforcement along the design anchorage length l_{bd}

$\Sigma A_{st,min}$ cross-sectional area of the minimum transverse reinforcement = 0,25 A_s for beams and 0 for slabs

A_s area of a single anchored bar with maximum bar diameter

K values shown in Figure 8.4

p transverse pressure [MPa] at ultimate limit state along l_{bd}

* See also 8.6: For direct supports l_{bd} may be taken less than $l_{b,min}$ provided that there is at least one transverse wire welded within the support. This should be at least 15 mm from the face of the support.

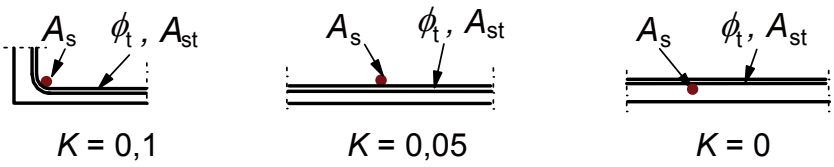

Figure 8.4: Values of K for beams and slabs

Licensed copy:University of Wales Trinity Saint David, 12/03/2020, Uncontrolled Copy, © BSI

8.5 Anchorage of links and shear reinforcement

(1) The anchorage of links and shear reinforcement should normally be effected by means of bends and hooks, or by welded transverse reinforcement. A bar should be provided inside a hook or bend.

(2) The anchorage should comply with Figure 8.5. Welding should be carried out in accordance with EN ISO 17660 and have a welding capacity in accordance with 8.6 (2).

Note: For definition of the bend angles see Figure 8.1.

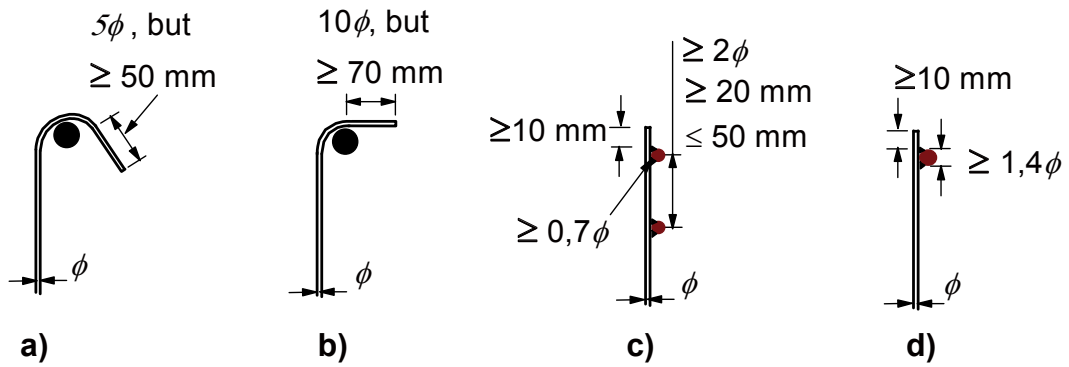

Note: For c) and d) the cover should not be less than either 3ϕ or 50 mm.

Figure 8.5: Anchorage of links

8.6 Anchorage by welded bars

(1) Additional anchorage to that of 8.4 and 8.5 may be obtained by transverse welded bars (see Figure 8.6) bearing on the concrete. The quality of the welded joints should be shown to be adequate.

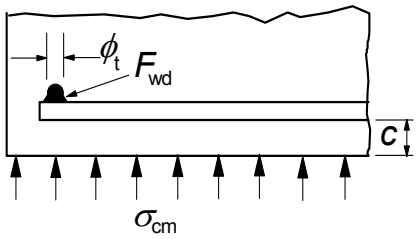

Figure 8.6: Welded transverse bar as anchoring device

(2) The anchorage capacity of one welded transverse bar (diameter 14 mm- 32 mm), welded on the inside of the main bar, is F_{btd}. σ_{sd} in Expression (8.3) may then be reduced by F_{btd}/A_s, where A_s is the area of the bar.

Note: The value of F_{btd} for use in a Country may be found in its National Annex. The recommended value is determined from:

$$F_{btd} = l_{td}\ \phi_t\ \sigma_{td} \text{ but not greater than } F_{wd} \qquad (8.8N)$$

where:

F_{wd} is the design shear strength of weld (specified as a factor times $A_s\ f_{yd}$; say 0.5 $A_s\ f_{yd}$ where A_s is the cross-section of the anchored bar and f_{yd} is its design yield strength)

l_{td} is the design length of transverse bar: $l_{td} = 1{,}16\ \phi_t\ (f_{yd}/\sigma_{td})^{0,5} \leq l_t$
l_t is the length of transverse bar, but not more than the spacing of bars to be anchored
ϕ_t is the diameter of transverse bar
σ_{td} is the concrete stress; $\sigma_{td} = (f_{ctd} + \sigma_{cm})/y \leq 3\ f_{cd}$
σ_{cm} is the compression in the concrete perpendicular to both bars (mean value, positive for compression)
y is a function: $y = 0{,}015 + 0{,}14\ e^{(-0,18x)}$
x is a function accounting for the geometry: $x = 2\ (c/\phi_t) + 1$
c is the concrete cover perpendicular to both bars

(3) If two bars of the same size are welded on opposite sides of the bar to be anchored, the capacity calculated from 8.6 (2) may be doubled provided that the cover to the outer bar is in accordance with Section 4.

(4) If two bars are welded to the same side with a minimum spacing of 3ϕ, the capacity should be multiplied by a factor of 1,41.

(5) For nominal bar diameters of 12 mm and less, the anchorage capacity of a welded cross bar is mainly dependent on the design strength of the welded joint. It may be calculated as follows:

$$F_{btd} = F_{wd} \leq 16\ A_s\ f_{cd}\ \phi_t\ /\ \phi_l \qquad (8.9)$$

where:
F_{wd} design shear strength of weld (see 8.6 (2))
ϕ_t nominal diameter of transverse bar: $\phi_t \leq 12$ mm
ϕ_l nominal diameter of bar to anchor: $\phi_l \leq 12$ mm

[AC1] If two welded cross bars with a minimum spacing of ϕ_t are used, the anchorage capacity given by Expression (8.9) should be multiplied by a factor of 1,41.[AC1]

8.7 Laps and mechanical couplers

8.7.1 General

(1)P Forces are transmitted from one bar to another by:
- lapping of bars, with or without bends or hooks;
- welding;
- mechanical devices assuring load transfer in tension-compression or in compression only.

8.7.2 Laps

(1)P The detailing of laps between bars shall be such that:
- the transmission of the forces from one bar to the next is assured;
- spalling of the concrete in the neighbourhood of the joints does not occur;
- large cracks which affect the performance of the structure do not occur.

(2) Laps:
- between bars should normally be staggered and not located in areas of high moments /forces (e.g. plastic hinges). Exceptions are given in (4) below;
- at any section should normally be arranged symmetrically.

(3) The arrangement of lapped bars should comply with Figure 8.7:
- the clear distance between lapped bars should not be greater than 4ϕ or 50 mm,

Licensed copy:University of Wales Trinity Saint David, 12/03/2020, Uncontrolled Copy, © BSI

otherwise the lap length should be increased by a length equal to the clear space where it exceeds 4ϕ or 50 mm;
- the longitudinal distance between two adjacent laps should not be less than 0,3 times the lap length, l_0;
- In case of adjacent laps, the clear distance between adjacent bars should not be less than 2ϕ or 20 mm.

(4) When the provisions comply with (3) above, the permissible percentage of lapped bars in tension may be 100% where the bars are all in one layer. Where the bars are in several layers the percentage should be reduced to 50%.

All bars in compression and secondary (distribution) reinforcement may be lapped in one section.

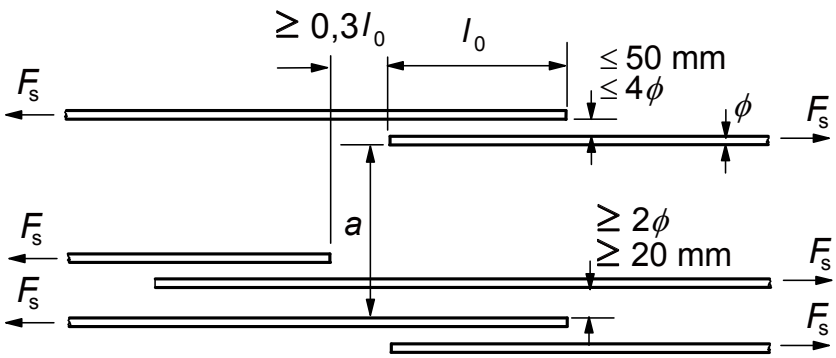

Figure 8.7: Adjacent laps

8.7.3 Lap length

(1) The design lap length is:

$$l_0 = \alpha_1\, \alpha_2\, \alpha_3\, \alpha_5\, \alpha_6\, l_{b,rqd} \geq l_{0,min} \qquad (8.10)$$

where:

$l_{b,rqd}$ is calculated from Expression (8.3)

[AC1] $l_{0,min} \geq \max\{0{,}3\, \alpha_6\, l_{b,rqd};\ 15\phi;\ 200\text{ mm}\}$ [AC1] (8.11)

Values of α_1, α_2, α_3 *and* α_5 may be taken from Table 8.2; however, for the calculation of α_3, $\Sigma A_{st,min}$ should be taken as $1{,}0 A_s(\sigma_{sd} / f_{yd})$, with A_s = area of one lapped bar.

$\alpha_6 = (\rho_1/25)^{0,5}$ but not exceeding 1,5 nor less than 1,0, where ρ_1 is the percentage of reinforcement lapped within 0,65 l_0 from the centre of the lap length considered (see Figure 8.8). Values of α_6 are given in Table 8.3.

Table 8.3: Values of the coefficient α_6

Percentage of lapped bars relative to the total cross-section area	< 25%	33%	50%	>50%
α_6	1	1,15	1,4	1,5
Note: Intermediate values may be determined by interpolation.				

Licensed copy:University of Wales Trinity Saint David, 12/03/2020, Uncontrolled Copy, © BSI

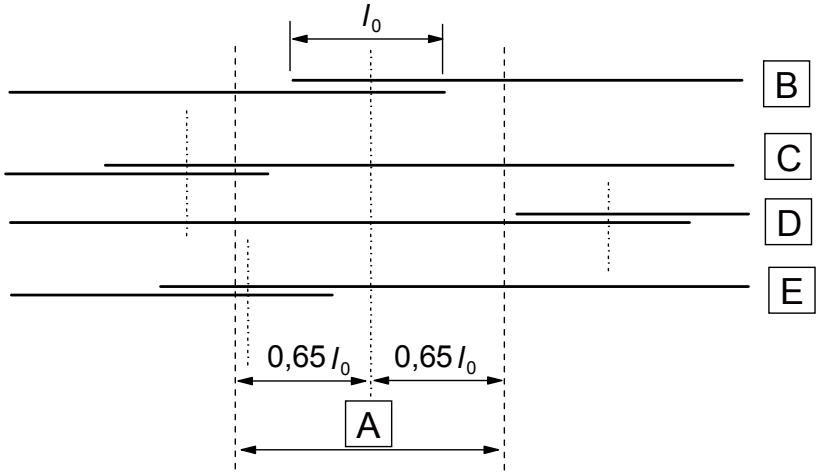

A Section considered B Bar I C Bar II D Bar III E Bar IV

Example: Bars II and III are outside the section being considered: % = 50 and α_6 =1,4

Figure 8.8: Percentage of lapped bars in one lapped section

8.7.4 Transverse reinforcement in the lap zone

8.7.4.1 Transverse reinforcement for bars in tension

(1) Transverse reinforcement is required in the lap zone to resist transverse tension forces.

(2) Where the diameter, ϕ, of the lapped bars is less than 20 mm, or the percentage of lapped bars in any section is less than 25%, then any transverse reinforcement or links necessary for other reasons may be assumed sufficient for the transverse tensile forces without further justification.

(3) Where the diameter, ϕ, of the lapped bars is greater than or equal to 20 mm, the transverse ⟦AC1⟩ reinforcement should have a total area, ΣA_{st} (sum of all legs parallel to the layer of the spliced ⟨AC1⟧ reinforcement) of not less than the area A_s of one lapped bar ($\Sigma A_{st} \geq 1{,}0 A_s$). The transverse bar should be placed perpendicular to the direction ⟦AC2⟩ of the lapped reinforcement. ⟨AC2⟧

If more than 50% of the reinforcement is lapped at one point and the distance, *a*, between adjacent laps at a section is $\leq 10\phi$ (see Figure 8.7) transverse reinforcement should be formed by links or U bars anchored into the body of the section.

(4) The transverse reinforcement provided for (3) above should be positioned at the outer sections of the lap as shown in Figure 8.9(a).

8.7.4.2 Transverse reinforcement for bars permanently in compression

(1) In addition to the rules for bars in tension one bar of the transverse reinforcement should be placed outside each end of the lap length and within 4ϕ of the ends of the lap length (Figure 8.9b).

Licensed copy:University of Wales Trinity Saint David, 12/03/2020, Uncontrolled Copy, © BSI

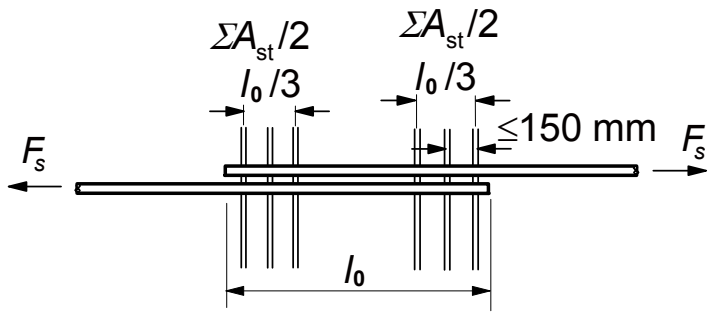

a) bars in tension

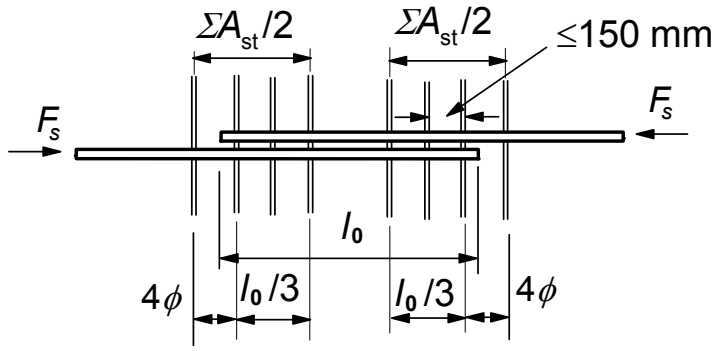

b) bars in compression

Figure 8.9: Transverse reinforcement for lapped splices

8.7.5 Laps for welded mesh fabrics made of ribbed wires

8.7.5.1 Laps of the main reinforcement

(1) Laps may be made either by intermeshing or by layering of the fabrics (Figure 8.10).

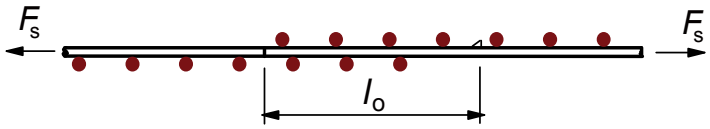

a) intermeshed fabric (longitudinal section)

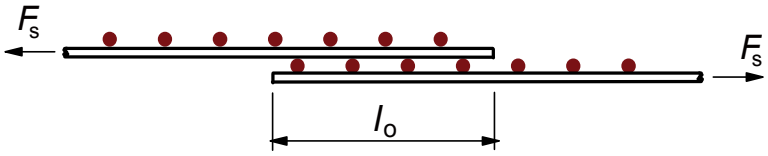

b) layered fabric (longitudinal section)

Figure 8.10: Lapping of welded fabric

(2) Where fatigue loads occur, intermeshing should be adopted

(3) For intermeshed fabric, the lapping arrangements for the main longitudinal bars should conform with 8.7.2. Any favourable effects of the transverse bars should be ignored: thus taking α_3 = 1,0.

Licensed copy:University of Wales Trinity Saint David, 12/03/2020, Uncontrolled Copy, © BSI

Licensed copy:University of Wales Trinity Saint David, 12/03/2020, Uncontrolled Copy, © BSI

(4) For layered fabric, the laps of the main reinforcement should generally be situated in zones where the calculated stress in the reinforcement at ultimate limit state is not more than 80% of the design strength.

(5) Where condition (4) above is not fulfilled, the effective depth of the steel for the calculation of bending resistance in accordance with 6.1 should apply to the layer furthest from the tension face. In addition, when carrying out a crack-verification next to the end of the lap, the steel stress used in Tables 7.2 and 7.3 should be increased by 25% due to the discontinuity at the ends of the laps,.

(6) The percentage of the main reinforcement, which may be lapped in any one section, should comply with the following:

For intermeshed fabric, the values given in Table 8.3 are applicable.

For layered fabric the permissible percentage of the main reinforcement that may be spliced by lapping in any section, depends on the specific cross-section area of the welded fabric provided $(A_s/s)_{prov}$, where s is the spacing of the wires:

- 100% if $(A_s/s)_{prov} \leq 1200$ mm^2/m

- 60% if $(A_s/s)_{prov} > 1200$ mm^2/m.

The joints of the multiple layers should be staggered by at least $1{,}3l_0$ (l_0 is determined from 8.7.3).

(7) Additional transverse reinforcement is not necessary in the lapping zone.

8.7.5.2 Laps of secondary or distribution reinforcement

(1) All secondary reinforcement may be lapped at the same location.

The minimum values of the lap length l_0 are given in Table 8.4; the lap length of two secondary bars should cover two main bars.

Table 8.4: Required lap lengths for secondary wires of fabrics

Diameter of secondary wires (mm)	Lap lengths
$\phi \leq 6$	≥ 150 mm; at least 1 wire pitch within the lap length
$6 < \phi \leq 8{,}5$	≥ 250 mm; at least 2 wire pitches
$8{,}5 < \phi \leq 12$	≥ 350 mm; at least 2 wire pitches

8.8 Additional rules for large diameter bars

(1) For bars with a diameter larger than ϕ_{large} the following rules supplement those given in 8.4 and 8.7.

Note: The value of ϕ_{large} for use in a Country may be found in its National Annex. The recommended value is 32 mm.

Licensed copy:University of Wales Trinity Saint David, 12/03/2020, Uncontrolled Copy, © BSI

(2) When such large diameter bars are used, crack control may be achieved either by using surface reinforcement (see 9.2.4) or by calculation (see 7.3.4).

(3) Splitting forces are higher and dowel action is greater with the use of large diameter bars. Such bars should be anchored with mechanical devices. As an alternative they may be anchored as straight bars, but links should be provided as confining reinforcement.

(4) Generally large diameter bars should not be lapped. Exceptions include sections with a [AC1] minimum dimension 1,0 m or where the reinforcement stress is not greater than 80% of the design ultimate strength.[AC1]

(5) Transverse reinforcement, additional to that for shear, should be provided in the anchorage zones where transverse compression is not present.

(6) For straight anchorage lengths (see Figure 8.11 for the notation used) the additional reinforcement referred to in (5) above should not be less than the following:

- in the direction parallel to the tension face:

$$A_{sh} = 0{,}25\, A_s\, n_1 \tag{8.12}$$

- in the direction perpendicular to the tension face:

$$A_{sv} = 0{,}25\, A_s\, n_2 \tag{8.13}$$

where:

A_s is the cross sectional area of an anchored bar,
n_1 is the number of layers with bars anchored at the same point in the member
n_2 is the number of bars anchored in each layer.

(7) The additional transverse reinforcement should be uniformly distributed in the anchorage zone and the spacing of bars should not exceed 5 times the diameter of the longitudinal reinforcement.

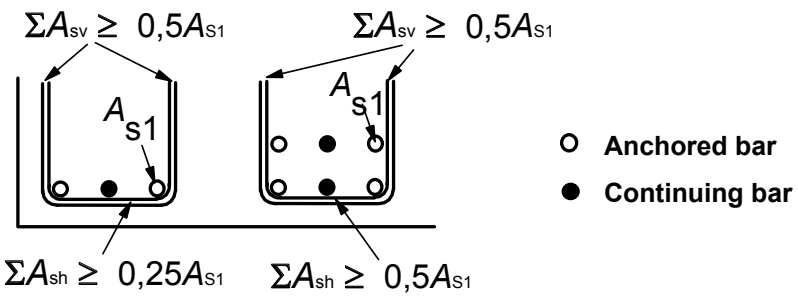

Example: In the left hand case $n_1 = 1$, $n_2 = 2$ and in the right hand case $n_1 = 2$, $n_2 = 2$

Figure 8.11: Additional reinforcement in an anchorage for large diameter bars where there is no transverse compression.

(8) For surface reinforcement, 9.2.4 applies, but the area of surface reinforcement should not be less than 0,01 $A_{ct,ext}$ in the direction perpendicular to large diameter bars, and 0,02 $A_{ct,ext}$ parallel to those bars.

Licensed copy:University of Wales Trinity Saint David, 12/03/2020, Uncontrolled Copy, © BSI

8.9 Bundled bars

8.9.1 General

(1) Unless otherwise stated, the rules for individual bars also apply for bundles of bars. In a bundle, all the bars should be of the same characteristics (type and grade). Bars of different sizes may be bundled provided that the ratio of diameters does not exceed 1,7.

(2) In design, the bundle is replaced by a notional bar having the same sectional area and the same centre of gravity as the bundle. The equivalent diameter, ϕ_n of this notional bar is such that:

$$\phi_n = \phi \sqrt{n_b} \leq 55 \text{ mm} \tag{8.14}$$

where

n_b is the number of bars in the bundle, which is limited to:

$n_b \leq 4$ for vertical bars in compression and for bars in a lapped joint,

$n_b \leq 3$ for all other cases.

(3) For a bundle, the rules given in 8.2 for spacing of bars apply. The equivalent diameter, ϕ_n, should be used but the clear distance between bundles should be measured from the actual external contour of the bundle of bars. The concrete cover should be measured from the actual external contour of the bundles and should not be less than ϕ_n.

(4) Where two touching bars are positioned one above the other, and where the bond conditions are good, such bars need not be treated as a bundle.

8.9.2 Anchorage of bundles of bars

(1) Bundles of bars in tension may be curtailed over end and intermediate supports. Bundles with an equivalent diameter < 32 mm may be curtailed near a support without the need for staggering bars. Bundles with an equivalent diameter ≥ 32 mm which are anchored near a support should be staggered in the longitudinal direction as shown in Figure 8.12.

(2) Where individual bars are anchored with a staggered distance greater than 1,3 $l_{b,rqd}$ (where $l_{b,rqd}$ is based on the bar diameter), the diameter of the bar may be used in assessing l_{bd} (see Figure 8.12). Otherwise the equivalent diameter of the bundle, ϕ_n, should be used.

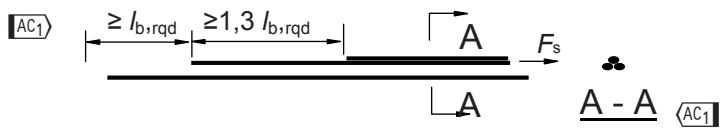

Figure 8.12: Anchorage of widely staggered bars in a bundle

(3) For compression anchorages bundled bars need not be staggered. For bundles with an equivalent diameter ≥ 32 mm, at least four links having a diameter ≥ 12 mm should be provided at the ends of the bundle. A further link should be provided just beyond the end of the curtailed bar.

Licensed copy:University of Wales Trinity Saint David, 12/03/2020, Uncontrolled Copy, © BSI

8.9.3 Lapping bundles of bars

(1) The lap length should be calculated in accordance with 8.7.3 using ϕ_n (from 8.9.1 (2)) as the equivalent diameter of bar.

(2) For bundles which consist of two bars with an equivalent diameter < 32 mm the bars may be lapped without staggering individual bars. In this case the equivalent bar size should be used to calculate l_0.

(3) For bundles which consist of two bars with an equivalent diameter ≥ 32 mm or of three bars, individual bars should be staggered in the longitudinal direction by at least $1{,}3l_0$ as shown in Figure 8.13, where l_0 is based on a single bar. For this case bar No. 4 is used as the lapping bar. Care should be taken to ensure that there are not more than four bars in any lap cross section. Bundles of more than three bars should not be lapped.

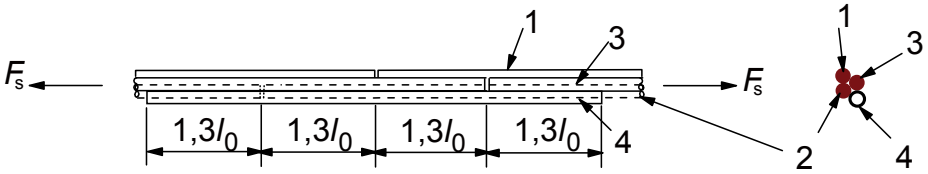

Figure 8.13: Lap joint in tension including a fourth bar

8.10 Prestressing tendons

8.10.1 Arrangement of prestressing tendons and ducts

8.10.1.1 General

(1)P The spacing of ducts or of pre-tensioned tendons shall be such as to ensure that placing and compacting of the concrete can be carried out satisfactorily and that sufficient bond can be attained between the concrete and the tendons.

8.10.1.2 Pre-tensioned tendons

(1) The minimum clear horizontal and vertical spacing of individual pre-tensioned tendons should be in accordance with that shown in Figure 8.14. Other layouts may be used provided that test results show satisfactory ultimate behaviour with respect to:

- the concrete in compression at the anchorage
- the spalling of concrete
- the anchorage of pre-tensioned tendons
- the placing of the concrete between the tendons.

Consideration should also be given to durability and the danger of corrosion of the tendon at the end of elements.

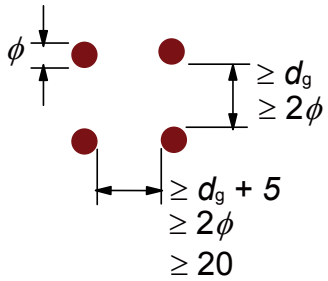

Note: Where ϕ is the diameter of pre-tensioned tendon and d_g is the maximum size of aggregate.

Figure 8.14: Minimum clear spacing between pre-tensioned tendons.

(2) Bundling of tendons should not occur in the anchorage zones, unless placing and compacting of the concrete can be carried out satisfactorily and sufficient bond can be attained between the concrete and the tendons.

8.10.1.3 Post-tension ducts

(1)P The ducts for post-tensioned tendons shall be located and constructed so that:
- the concrete can be safely placed without damaging the ducts;
- the concrete can resist the forces from the ducts in the curved parts during and after stressing;
- no grout will leak into other ducts during grouting process.

(2) Ducts for post-tensioned members, should not normally be bundled except in the case of a pair of ducts placed vertically one above the other.

(3) The minimum clear spacing between ducts should be in accordance with that shown in Figure 8.15.

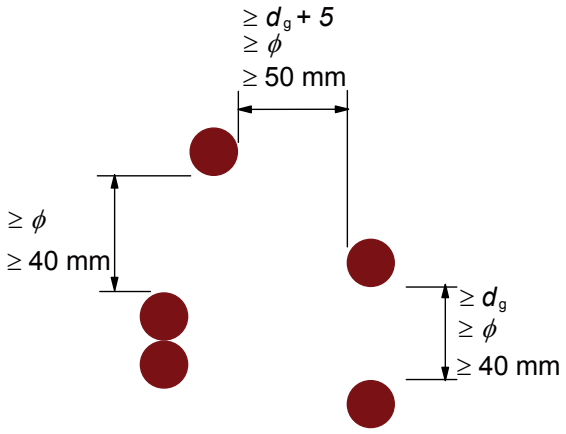

Note: Where ϕ is the diameter of post-tension duct and d_g is the maximum size of aggregate.

Figure 8.15: Minimum clear spacing between ducts

8.10.2 Anchorage of pre-tensioned tendons

8.10.2.1 General

(1) In anchorage regions for pre-tensioned tendons, the following length parameters should be considered, see Figure 8.16:

a) Transmission length, l_{pt}, over which the prestressing force (P_0) is fully transmitted to the

Licensed copy:University of Wales Trinity Saint David, 12/03/2020, Uncontrolled Copy, © BSI

Licensed copy:University of Wales Trinity Saint David, 12/03/2020, Uncontrolled Copy, © BSI

concrete; see 8.10.2.2 (2),

b) Dispersion length, l_{disp} over which the concrete stresses gradually disperse to a linear distribution across the concrete section; see 8.10.2.2 (4),

c) Anchorage length, l_{bpd}, over which the tendon force F_{pd} in the ultimate limit state is fully anchored in the concrete; see 8.10.2.3 (4) and (5).

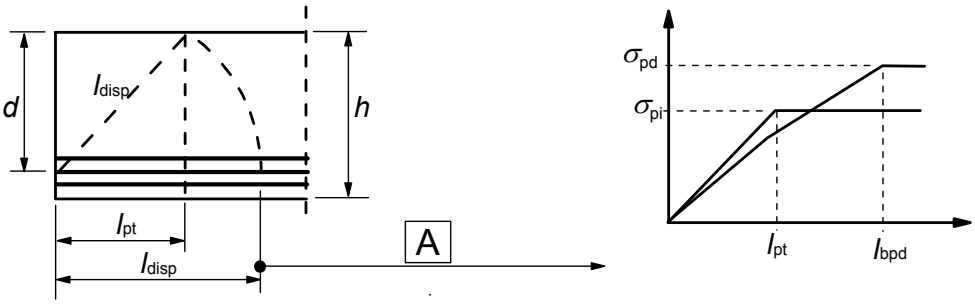

A - Linear stress distribution in member cross-section

Figure 8.16: Transfer of prestress in pretensioned elements; length parameters

8.10.2.2 Transfer of prestress

(1) At release of tendons, the prestress may be assumed to be transferred to the concrete by a constant bond stress f_{bpt}, where:

$$f_{bpt} = \eta_{p1}\, \eta_1\, f_{ctd}(t) \tag{8.15}$$

where:

η_{p1} is a coefficient that takes into account the type of tendon and the bond situation at release
η_{p1} = 2,7 for indented wires
η_{p1} = 3,2 for 3 and 7-wire strands

η_1 = 1,0 for good bond conditions (see 8.4.2)
= 0,7 otherwise, unless a higher value can be justified with regard to special circumstances in execution

AC1 $f_{ctd}(t)$ is the design tensile value of strength at time of release; $f_{ctd}(t) = \alpha_{ct} \cdot 0{,}7 \cdot f_{ctm}(t) / \gamma_C$ (see also 3.1.2 (9) and 3.1.6 (2)P) AC1

Note: Values of η_{p1} for types of tendons other than those given above may be used subject to a European Technical Approval

(2) The basic value of the transmission length, l_{pt}, is given by:

$$l_{pt} = \alpha_1 \alpha_2 \phi \sigma_{pm0} / f_{bpt} \tag{8.16}$$

where:

α_1 = 1,0 for gradual release
= 1,25 for sudden release

α_2 = 0,25 for tendons with circular cross section
= 0,19 for 3 and 7-wire strands

ϕ is the nominal diameter of tendon

σ_{pm0} is the tendon stress just after release

(3) The design value of the transmission length should be taken as the less favourable of two

Licensed copy:University of Wales Trinity Saint David, 12/03/2020, Uncontrolled Copy, © BSI

values, depending on the design situation:

$$l_{pt1} = 0{,}8\ l_{pt} \tag{8.17}$$

or

$$l_{pt2} = 1{,}2\ l_{pt} \tag{8.18}$$

Note: Normally the lower value is used for verifications of local stresses at release, the higher value for ultimate limit states (shear, anchorage etc.).

(4) Concrete stresses may be assumed to have a linear distribution outside the dispersion [AC1⟩ length, see Figure 8.16: ⟨AC1]

$$l_{disp} = \sqrt{l_{pt}^2 + d^2} \tag{8.19}$$

(5) Alternative build-up of prestress may be assumed, if adequately justified and if the transmission length is modified accordingly.

[AC1⟩ 8.10.2.3 Anchorage of tendons for the ultimate limit state ⟨AC1]

(1) The anchorage of tendons should be checked in sections where the concrete tensile stress exceeds $f_{ctk,0,05}$. The tendon force should be calculated for a cracked section, including the [AC1⟩effect of shear according to 6.2.3 (7); see also 9.2.1.3. Where the concrete tensile stress is less ⟨AC1] than $f_{ctk,0,05}$, no anchorage check is necessary.

(2) The bond strength for anchorage in the ultimate limit state is:

$$f_{bpd} = \eta_{p2}\ \eta_1\ f_{ctd} \tag{8.20}$$

where:

η_{p2} is a coefficient that takes into account the type of tendon and the bond situation at anchorage

η_{p2} = 1,4 for indented wires or

η_{p2} = 1,2 for 7-wire strands

η_1 is as defined in 8.10.2.2 (1)

Note : Values of η_{p2} for types of tendons other than those given above may be used subject to a European Technical Approval.

(3) Due to increasing brittleness with higher concrete strength, $f_{ctk,0,05}$ should here be limited to the value for C60/75, unless it can be verified that the average bond strength increases above this limit.

(4) The total anchorage length for anchoring a tendon with stress σ_{pd} is:

$$l_{bpd} = l_{pt2} + \alpha_2 \phi (\sigma_{pd} - \sigma_{pm\infty}) / f_{bpd} \tag{8.21}$$

where

l_{pt2} is the upper design value of transmission length, see 8.10.2.2 (3)

α_2 as defined in 8.10.2.2 (2)

σ_{pd} is the tendon stress corresponding to the force described in (1)

$\sigma_{pm\infty}$ is the prestress after all losses

(5) Tendon stresses in the anchorage zone are illustrated in Figure 8.17.

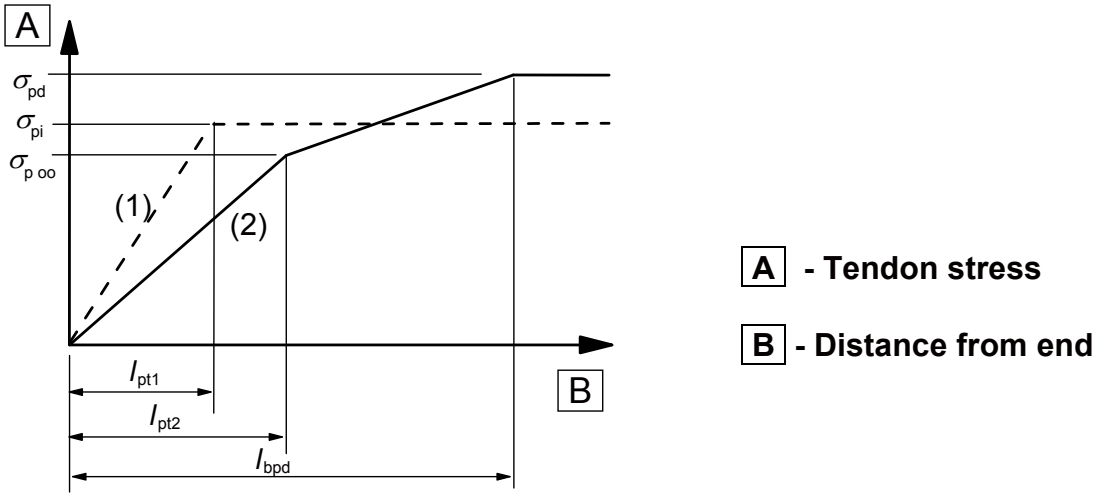

Figure 8.17: Stresses in the anchorage zone of pre-tensioned members: (1) at release of tendons, (2) at ultimate limit state

(6) In case of combined ordinary and pre-tensioned reinforcement, the anchorage capacities of each may be summed.

8.10.3 Anchorage zones of post-tensioned members

(1) The design of anchorage zones should be in accordance with the application rules given in this clause and those in 6.5.3.

(2) When considering the effects of the prestress as a concentrated force on the anchorage zone, the design value of the prestressing tendons should be in accordance with 2.4.2.2 (3) and the lower characteristic tensile strength of the concrete should be used.

(3) The bearing stress behind anchorage plates should be checked in accordance with the relevant European Technical Approval.

(4) Tensile forces due to concentrated forces should be assessed by a strut and tie model, or other appropriate representation (see 6.5). Reinforcement should be detailed assuming that it acts at its design strength. If the stress in this reinforcement is limited to 300 MPa no check of crackwidths is necessary.

(5) As a simplification the prestressing force may be assumed to disperse at an angle of spread 2β (see Figure 8.18), starting at the end of the anchorage device, where β may be assumed to be arc tan 2/3.

Licensed copy:University of Wales Trinity Saint David, 12/03/2020, Uncontrolled Copy, © BSI

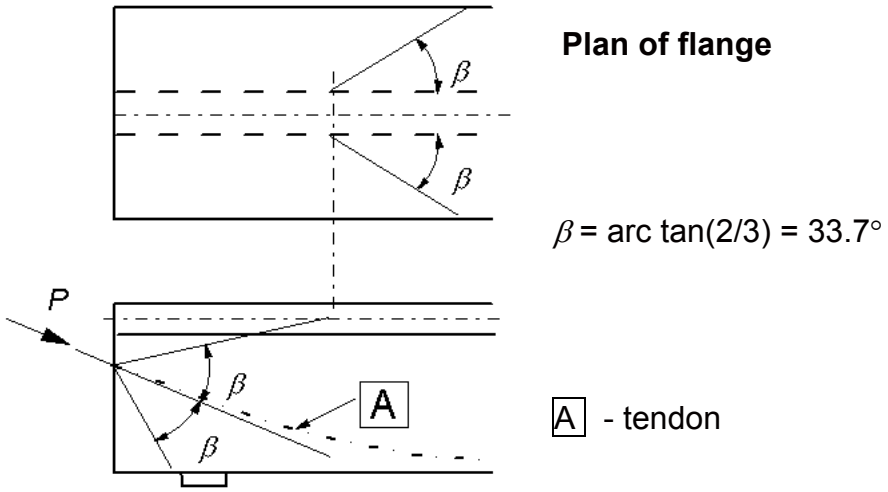

Figure 8.18: Dispersion of prestress

8.10.4 Anchorages and couplers for prestressing tendons

(1)P The anchorage devices used for post-tensioned tendons shall be in accordance with those specified for the prestressing system, and the anchorage lengths in the case of pre-tensioned tendons shall be such as to enable the full design strength of the tendons to be developed, taking account of any repeated, rapidly changing action effects.

(2)P Where couplers are used they shall be in accordance with those specified for the prestressing system and shall be so placed - taking account of the interference caused by these devices - that they do not affect the bearing capacity of the member and that any temporary anchorage which may be needed during construction can be introduced in a satisfactory manner.

(3) Calculations for local effects in the concrete and for the transverse reinforcement should be made in accordance with 6.5 and 8.10.3.

(4) In general, couplers should be located away from intermediate supports.

(5) The placing of couplers on 50% or more of the tendons at one cross-section should be avoided unless it can be shown that a higher percentage will not cause more risk to the safety of the structure.

8.10.5 Deviators

(1)P A deviator shall satisfy the following requirements:
- withstand both longitudinal and transverse forces that the tendon applies to it and transmit these forces to the structure;
- ensure that the radius of curvature of the prestressing tendon does not cause any overstressing or damage to it.

(2)P In the deviation zones the tubes forming the sheaths shall be able to sustain the radial pressure and longitudinal movement of the prestressing tendon, without damage and without impairing its proper functioning.

Licensed copy:University of Wales Trinity Saint David, 12/03/2020, Uncontrolled Copy, © BSI

(3)P The radius of curvature of the tendon in a deviation zone shall be in accordance with EN 10138 and appropriate European Technical Approvals.

(4) Designed tendon deviations up to an angle of 0,01 radians may be permitted without using a deviator. The forces developed by the change of angle using a deviator in accordance with the relevant European Technical Approval should be taken into account in the design calculations.

Licensed copy:University of Wales Trinity Saint David, 12/03/2020, Uncontrolled Copy, © BSI

Licensed copy:University of Wales Trinity Saint David, 12/03/2020, Uncontrolled Copy, © BSI

SECTION 9 DETAILING OF MEMBERS AND PARTICULAR RULES

9.1 General

(1)P The requirements for safety, serviceability and durability are satisfied by following the rules given in this section in addition to the general rules given elsewhere.

(2) The detailing of members should be consistent with the design models adopted.

(3) Minimum areas of reinforcement are given in order to prevent a brittle failure, wide cracks and also to resist forces arising from restrained actions.

Note: The rules given in this section are mainly applicable to reinforced concrete buildings.

9.2 Beams

9.2.1 Longitudinal reinforcement

9.2.1.1 Minimum and maximum reinforcement areas

(1) The area of longitudinal tension reinforcement should not be taken as less than $A_{s,min}$.

Note 1: See also 7.3 for area of longitudinal tension reinforcement to control cracking.

Note 2: The value of $A_{s,min}$ for beams for use in a Country may be found in its National Annex. The recommended value is given in the following:

$$A_{s,min} = 0{,}26\frac{f_{ctm}}{f_{yk}}b_t d \qquad \text{but not less than } 0{,}0013 b_t d \tag{9.1N}$$

Where:

b_t denotes the mean width of the tension zone; for a T-beam with the flange in compression, only the width of the web is taken into account in calculating the value of b_t.

f_{ctm} should be determined with respect to the relevant strength class according to Table 3.1.

Alternatively, for secondary elements, where some risk of brittle failure may be accepted, $A_{s,min}$ may be taken as 1,2 times the area required in ULS verification.

(2) Sections containing less reinforcement than $A_{s,min}$ should be considered as unreinforced (see Section 12).

(3) The cross-sectional area of tension or compression reinforcement should not exceed $A_{s,max}$ outside lap locations.

Note: The value of $A_{s,max}$ for beams for use in a Country may be found in its National Annex. The recommended value is $0{,}04A_c$.

(4) For members prestressed with permanently unbonded tendons or with external prestressing cables, it should be verified that the ultimate bending capacity is larger than the flexural cracking moment. A capacity of 1,15 times the cracking moment is sufficient.

9.2.1.2 Other detailing arrangements

(1) In monolithic construction, even when simple supports have been assumed in design, the section at supports should be designed for a bending moment arising from partial fixity of at least β_1 of the maximum bending moment in the span.

Note 1: The value of β_1 for beams for use in a Country may be found in its National Annex. The recommended value is 0,15.

Note 2: The minimum area of longitudinal reinforcement section defined in 9.2.1.1 (1) applies.

(2) At intermediate supports of continuous beams, the total area of tension reinforcement A_s of a flanged cross-section should be spread over the effective width of flange (see 5.3.2). Part of it may be concentrated over the web width (See Figure 9.1).

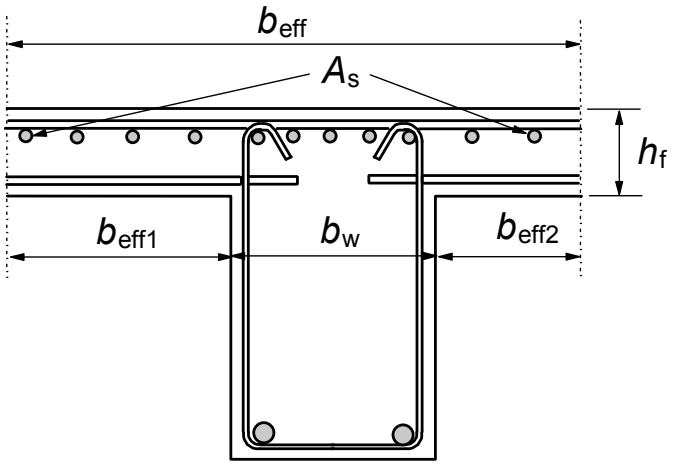

Figure 9.1: Placing of tension reinforcement in flanged cross-section.

(3) Any compression longitudinal reinforcement (diameter ϕ) which is included in the resistance calculation should be held by transverse reinforcement with spacing not greater than 15ϕ.

9.2.1.3 Curtailment of longitudinal tension reinforcement

(1) Sufficient reinforcement should be provided at all sections to resist the envelope of the acting tensile force, including the effect of inclined cracks in webs and flanges.

(2) For members with shear reinforcement the additional tensile force, ΔF_{td}, should be calculated according to 6.2.3 (7). For members without shear reinforcement ΔF_{td} may be estimated by shifting the moment curve a distance $a_l = d$ according to 6.2.2 (5). This "shift rule" may also be used as an alternative for members with shear reinforcement, where:

$$a_l = z\,(\cot\theta - \cot\alpha)/2 \quad \text{(symbols defined in 6.2.3)} \tag{9.2}$$

The additional tensile force is illustrated in Figure 9.2.

(3) The resistance of bars within their anchorage lengths may be taken into account, assuming a linear variation of force, see Figure 9.2. As a conservative simplification this contribution may be ignored.

(4) The anchorage length of a bent-up bar which contributes to the resistance to shear should be not less than 1,3 l_{bd} in the tension zone and 0,7 l_{bd} in the compression zone. It is measured from the point of intersection of the axes of the bent-up bar and the longitudinal reinforcement.

Licensed copy:University of Wales Trinity Saint David, 12/03/2020, Uncontrolled Copy, © BSI

Licensed copy:University of Wales Trinity Saint David, 12/03/2020, Uncontrolled Copy, © BSI

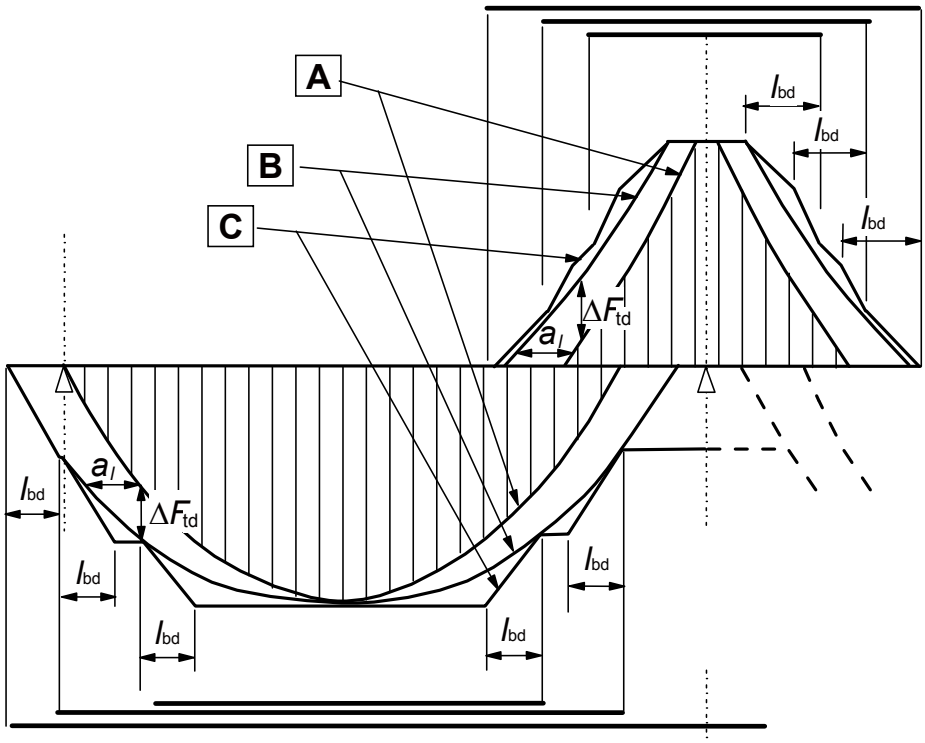

A - Envelope of $M_{Ed}/z + N_{Ed}$ B - acting tensile force F_s C - resisting tensile force F_{Rs}

Figure 9.2: Illustration of the curtailment of longitudinal reinforcement, taking into account the effect of inclined cracks and the resistance of reinforcement within anchorage lengths

9.2.1.4 Anchorage of bottom reinforcement at an end supports

(1) The area of bottom reinforcement provided at AC1 end AC1 supports with little or no end fixity assumed in design, should be at least β_2 of the area of steel provided in the span.

Note: The value of β_2 for beams for use in a Country may be found in its National Annex. The recommended value is 0,25.

(2) The tensile force to be anchored may be determined according to AC1 6.2.3 (7) AC1 (members with shear reinforcement) including the contribution of the axial force if any, or according to the shift rule:

AC1 $F_{Ed} = |V_{Ed}| \cdot a_l / z + N_{Ed}$ AC1 (9.3)

where N_{Ed} is the axial force, to be added to or subtracted from the tensile force; a_l see 9.2.1.3 (2).

(3) The anchorage length is l_{bd} according to 8.4.4, measured from the line of contact between beam and support. Transverse pressure may be taken into account for direct support. See Figure 9.3.

Licensed copy:University of Wales Trinity Saint David, 12/03/2020, Uncontrolled Copy, © BSI

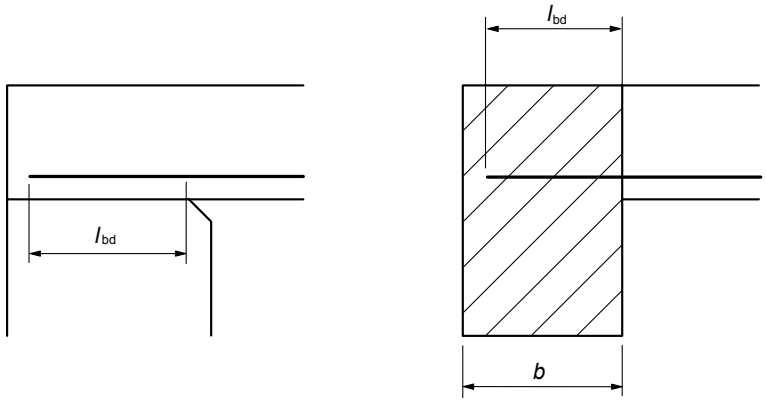

a) Direct support: Beam supported by wall or column

b) Indirect support: Beam intersecting another supporting beam

Figure 9.3: Anchorage of bottom reinforcement at end supports

9.2.1.5 Anchorage of bottom reinforcement at intermediate supports

(1) The area of reinforcement given in 9.2.1.4 (1) applies.

(2) The anchorage length should not be less than 10ϕ (for straight bars) or not less than the diameter of the mandrel (for hooks and bends with bar diameters at least equal to 16 mm) or twice the diameter of the mandrel (in other cases) (see Figure 9.4 (a)). These minimum values are normally valid but a more refined analysis may be carried out in accordance with 6.6.

(3) The reinforcement required to resist possible positive moments (e.g. settlement of the support, explosion, etc.) should be specified in contract documents. This reinforcement should be continuous which may be achieved by means of lapped bars (see Figure 9.4 (b) or (c)).

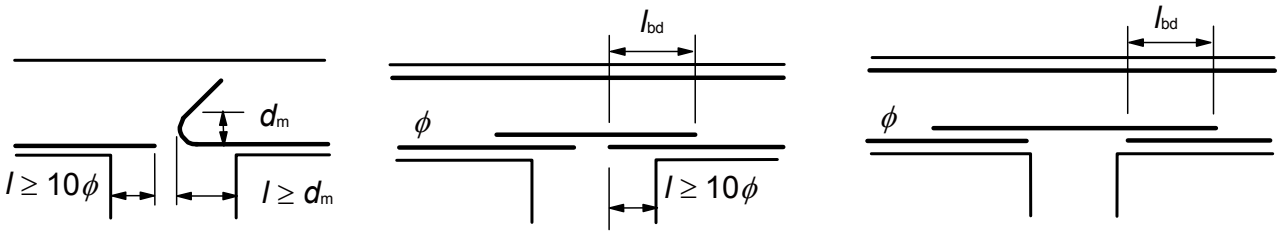

a) **b)** **c)**

Figure 9.4: Anchorage at intermediate supports

9.2.2 Shear reinforcement

(1) The shear reinforcement should form an angle α of between 45° and 90° to the longitudinal axis of the structural element.

(2) The shear reinforcement may consist of a combination of:
- links enclosing the longitudinal tension reinforcement and the compression zone (see Figure 9.5);
- bent-up bars;

- cages, ladders, etc. which are cast in without enclosing the longitudinal reinforcement but are properly anchored in the compression and tension zones.

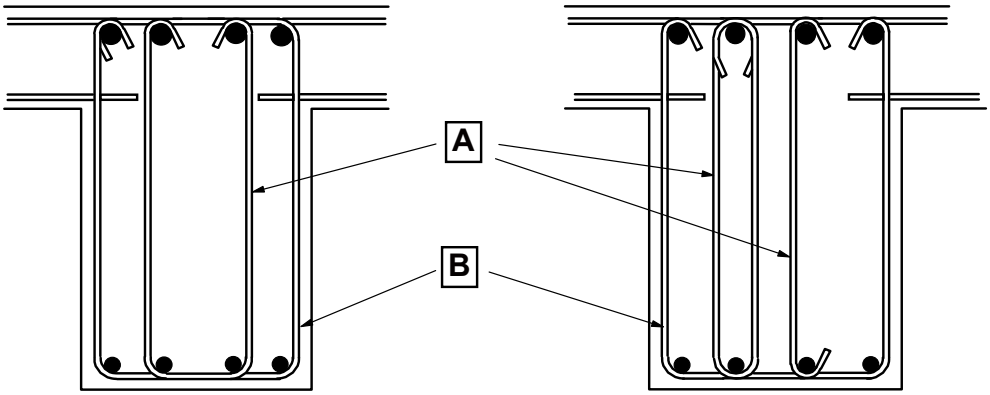

A **Inner link alternatives** **B** **Enclosing link**

Figure 9.5: Examples of shear reinforcement

(3) Links should be effectively anchored. A lap joint on the leg near the surface of the web is permitted provided that the link is not required to resist torsion.

(4) At least β_3 of the necessary shear reinforcement should be in the form of links.

Note: The value of β_3 for use in a Country may be found in its National Annex. The recommended value is 0, 5.

(5) The ratio of shear reinforcement is given by Expression (9.4):

$$\rho_w = A_{sw} / (s \,.\, b_w \,.\, \sin\alpha) \tag{9.4}$$

where:

ρ_w is the shear reinforcement ratio
ρ_w should not be less than $\rho_{w,min}$
A_{sw} is the area of shear reinforcement within length s
s is the spacing of the shear reinforcement measured along the longitudinal axis of the member
b_w is the breadth of the web of the member
α is the angle between shear reinforcement and the longitudinal axis (see 9.2.2 (1))

Note: The value of $\rho_{w,min}$ for beams for use in a Country may be found in its National Annex. The recommended value is given Expression (9.5N)

$$\rho_{w,min} = (0{,}08\sqrt{f_{ck}})/f_{yk} \tag{9.5N}$$

(6) The maximum longitudinal spacing between shear assemblies should not exceed $s_{l,max}$.

Note: The value of $s_{l,max}$ for use in a Country may be found in its National Annex. The recommended value is given by Expression (9.6N)

$$s_{l,max} = 0{,}75d\,(1 + \cot\alpha) \tag{9.6N}$$

where α is the inclination of the shear reinforcement to the longitudinal axis of the beam.

Licensed copy:University of Wales Trinity Saint David, 12/03/2020, Uncontrolled Copy, © BSI

(7) The maximum longitudinal spacing of bent-up bars should not exceed $s_{b,max}$:

Note: The value of $s_{b,max}$ for use in a Country may be found in its National Annex. The recommended value is given by Expression (9.7N)

$$s_{b,max} = 0{,}6\, d\, (1 + \cot \alpha) \qquad (9.7N)$$

(8) The transverse spacing of the legs in a series of shear links should not exceed $s_{t,max}$:

Note: The value of $s_{t,max}$ for use in a Country may be found in its National Annex. The recommended value is given by Expression (9.8N)

$$s_{t,max} = 0{,}75d \leq 600 \text{ mm} \qquad (9.8N)$$

9.2.3 Torsion reinforcement

(1) The torsion links should be closed and be anchored by means of laps or hooked ends, see Figure 9.6, and should form an angle of 90° with the axis of the structural element.

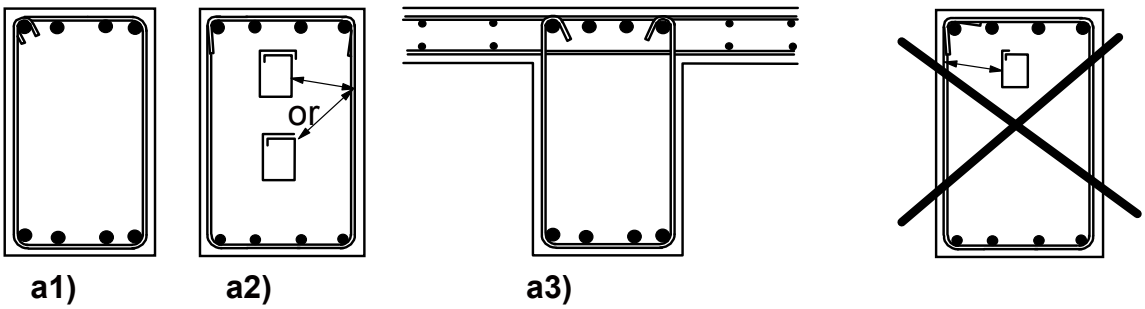

Note: The second alternative for a2) (lower sketch) should have a full lap length along the top.

Figure 9.6: Examples of shapes for torsion links

(2) The provisions of 9.2.2 (5) and (6) are generally sufficient to provide the minimum torsion links required.

(3) The longitudinal spacing of the torsion links should not exceed u / 8 (see 6.3.2, Figure 6.11, for the notation), or the requirement in 9.2.2 (6) or the lesser dimension of the beam cross-section.

(4) The longitudinal bars should be so arranged that there is at least one bar at each corner, the others being distributed uniformly around the inner periphery of the links, with a spacing not greater than 350 mm.

9.2.4 Surface reinforcement

(1) It may be necessary to provide surface reinforcement either to control cracking or to ensure adequate resistance to spalling of the cover.

AC2 **Note:** Guidance on surface reinforcements is given in Informative Annex J. AC2

Licensed copy:University of Wales Trinity Saint David, 12/03/2020, Uncontrolled Copy, © BSI

Licensed copy:University of Wales Trinity Saint David, 12/03/2020, Uncontrolled Copy, © BSI

9.2.5 Indirect supports

(1) Where a beam is supported by a beam instead of a wall or column, reinforcement should be provided and designed to resist the mutual reaction. This reinforcement is in addition to that required for other reasons. This rule also applies to a slab not supported at the top of a beam.

(2) The supporting reinforcement between two beams should consist of links surrounding the principal reinforcement of the supporting member. Some of these links may be distributed outside the volume of the concrete, which is common to the two beams, (see Figure 9.7).

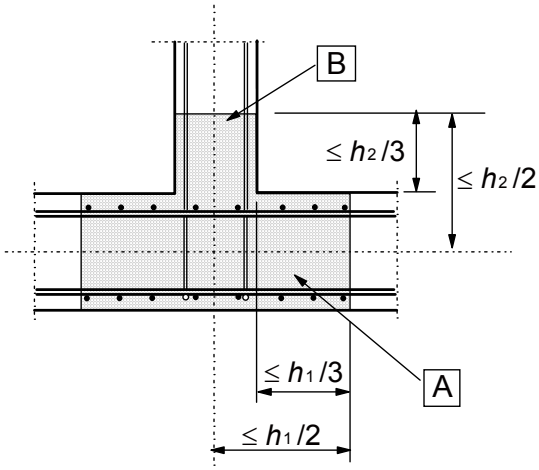

A supporting beam with height h_1 B supported beam with height h_2 ($h_1 \geq h_2$)

Figure 9.7: Placing of supporting reinforcement in the intersection zone of two beams (plan view)

9.3 Solid slabs

(1) This section applies to one-way and two-way solid slabs for which b and l_{eff} are not less than $5h$ (see 5.3.1).

9.3.1 Flexural reinforcement

9.3.1.1 General

(1) For the minimum and the maximum steel percentages in the main direction 9.2.1.1 (1) and (3) apply.

Note: In addition to Note 2 of 9.2.1.1 (1), for slabs where the risk of brittle failure is small, $A_{s,min}$ may be taken as 1,2 times the area required in ULS verification.

(2) Secondary transverse reinforcement of not less than 20% of the principal reinforcement should be provided in one way slabs. In areas near supports transverse reinforcement to principal top bars is not necessary where there is no transverse bending moment.

(3) The spacing of bars should not exceed $s_{max,slabs}$.

Note; The value of $s_{max,slabs}$ for use in a Country may be found in its National Annex. The recommended value is:

- for the principal reinforcement, $3h \leq 400$ mm, where h is the total depth of the slab;

- for the secondary reinforcement, $3{,}5h \leq$ 450 mm .

In areas with concentrated loads or areas of maximum moment those provisions become respectively:
- for the principal reinforcement, $2h \leq 250$ mm
- for the secondary reinforcement, $3h \leq 400$ mm.

(4) The rules given in 9.2.1.3 (1) to (3), 9.2.1.4 (1) to (3) and 9.2.1.5 (1) to (2) also apply but with $a_l = d$.

9.3.1.2 Reinforcement in slabs near supports

(1) In simply supported slabs, half the calculated span reinforcement should continue up to the support and be anchored therein in accordance with 8.4.4.

Note: Curtailment and anchorage of reinforcement may be carried out according to 9.2.1.3, 9.2.1.4 and 9.2.1.5.

(2) Where partial fixity occurs along an edge of a slab, but is not taken into account in the analysis, the top reinforcement should be capable of resisting at least 25% of the maximum moment in the adjacent span. This reinforcement should extend at least 0,2 times the length of the adjacent span, measured from the face of the support. It should be continuous across internal supports and anchored at end supports. At an end support the moment to be resisted may be reduced to 15% of the maximum moment in the adjacent span.

9.3.1.3 Corner reinforcement

(1) If the detailing arrangements at a support are such that lifting of the slab at a corner is restrained, suitable reinforcement should be provided.

9.3.1.4 Reinforcement at the free edges

(1) Along a free (unsupported) edge, a slab should normally contain longitudinal and transverse reinforcement, generally arranged as shown in Figure 9.8.

(2) The normal reinforcement provided for a slab may act as edge reinforcement.

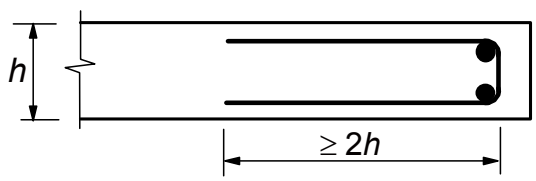

Figure 9.8: Edge reinforcement for a slab

9.3.2 Shear reinforcement

(1) A slab in which shear reinforcement is provided should have a depth of at least 200 mm.

(2) In detailing the shear reinforcement, the minimum value and definition of reinforcement ratio in 9.2.2 apply, unless modified by the following.

(3) In slabs, if $|V_{Ed}| \leq 1/3\ V_{Rd,max}$, (see 6.2), the shear reinforcement may consist entirely of bent-up bars or of shear reinforcement assemblies.

Licensed copy:University of Wales Trinity Saint David, 12/03/2020, Uncontrolled Copy, © BSI

Licensed copy:University of Wales Trinity Saint David, 12/03/2020, Uncontrolled Copy, © BSI

(4) The maximum longitudinal spacing of successive series of links is given by:

$$s_{max} = 0{,}75d(1+\cot\alpha) \tag{9.9}$$

where α is the inclination of the shear reinforcement.

The maximum longitudinal spacing of bent-up bars is given by:

$$s_{max} = d. \tag{9.10}$$

(5) The maximum transverse spacing of shear reinforcement should not exceed 1,5*d.*

9.4 Flat slabs

9.4.1 Slab at internal columns

(1) The arrangement of reinforcement in flat slab construction should reflect the behaviour under working conditions. In general this will result in a concentration of reinforcement over the columns.

(2) At internal columns, unless rigorous serviceability calculations are carried out, top reinforcement of area 0,5 A_t should be placed in a width equal to the sum of 0,125 times the panel width on either side of the column. A_t represents the area of reinforcement required to resist the full negative moment from the sum of the two half panels each side of the column.

(3) Bottom reinforcement (≥ 2 bars) in each orthogonal direction should be provided at internal columns and this reinforcement should pass through the column.

9.4.2 Slab at edge and corner columns

(1) Reinforcement perpendicular to a free edge required to transmit bending moments from the slab to an edge or corner column should be placed within the effective width b_e shown in Figure 9.9.

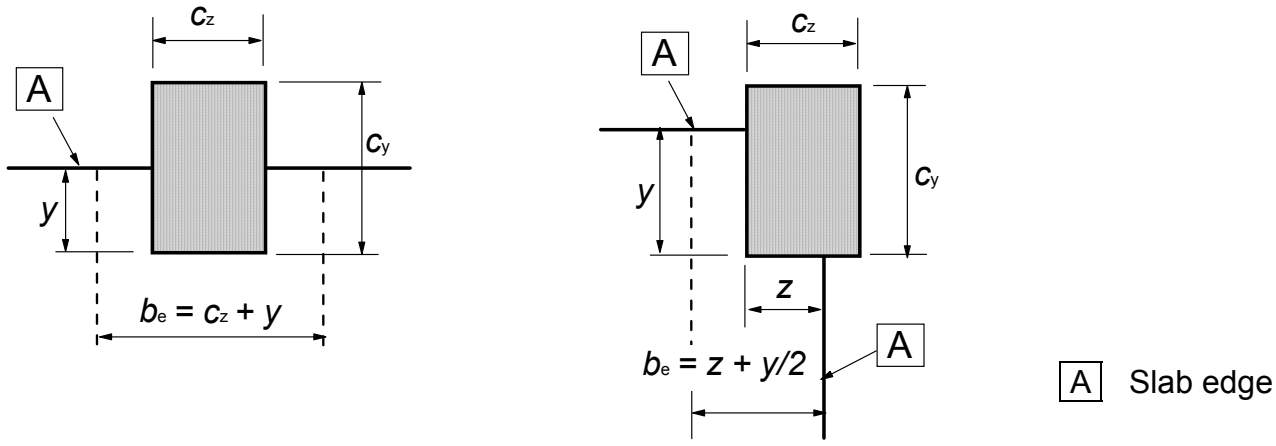

Note: y can be > c_y

a) Edge column

Note: z can be > c_z and y can be > c_y

b) Corner column

Note: y is the distance from the edge of the slab to the innermost face of the column.

Figure 9.9: Effective width, b_e, of a flat slab

Licensed copy:University of Wales Trinity Saint David, 12/03/2020, Uncontrolled Copy, © BSI

9.4.3 Punching shear reinforcement

(1) Where punching shear reinforcement is required (see 6.4) it should be placed between the loaded area/column and *kd* inside the control perimeter at which shear reinforcement is no longer required. It should be provided in at least two perimeters of link legs (see Figure 9.10). The spacing of the link leg perimeters should not exceed 0,75*d*.

The spacing of link legs around a perimeter should not exceed 1,5*d* within the first control perimeter (2*d* from loaded area), and should not exceed 2*d* for perimeters outside the first control perimeter where that part of the perimeter is assumed to contribute to the shear capacity (see Figure 6.22).

For bent down bars as arranged in Figure 9.10 b) one perimeter of link legs may be considered sufficient.

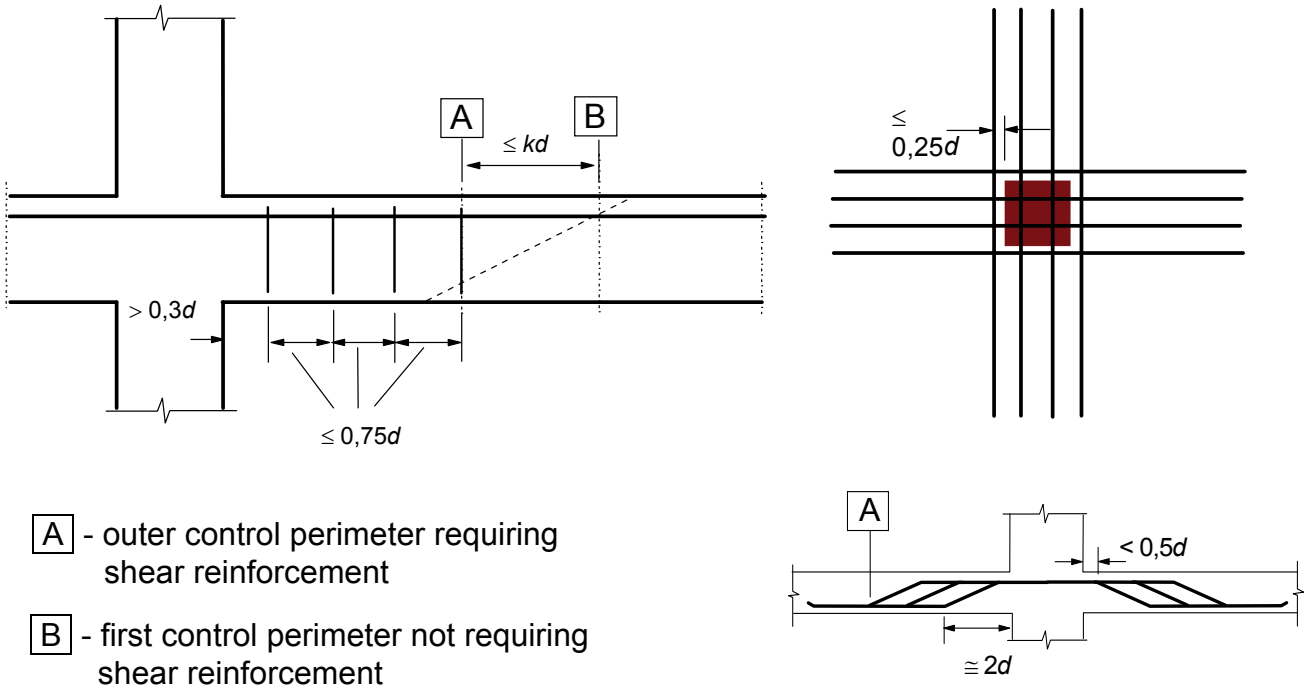

A - outer control perimeter requiring shear reinforcement

B - first control perimeter not requiring shear reinforcement

a) Spacing of links

b) Spacing of bent-up bars

Figure 9.10: Punching shear reinforcement

Note: See 6.4.5 (4) for the value of *k*.

(2) Where shear reinforcement is required the area of a link leg (or equivalent), $A_{sw,min}$, is given by Expression (9.11).

$$A_{sw,min} \cdot (1{,}5 \cdot \sin\alpha + \cos\alpha)/(s_r \cdot s_t) \geq 0{,}08 \cdot \frac{\sqrt{f_{ck}}}{f_{yk}} \qquad (9.11)$$

where :

- α is the angle between the shear reinforcement and the main steel (i.e. for vertical links α = 90° and sin α = 1)
- s_r is the spacing of shear links in the radial direction
- s_t is the spacing of shear links in the tangential direction
- f_{ck} is in MPa

Licensed copy:University of Wales Trinity Saint David, 12/03/2020, Uncontrolled Copy, © BSI

The vertical component of only those prestressing tendons passing within a distance of 0.5d of the column may be included in the shear calculation.

(3) Bent-up bars passing through the loaded area or at a distance not exceeding 0,25*d* from this area may be used as punching shear reinforcement (see Figure 9.10 b), top).

(4) The distance between the face of a support, or the circumference of a loaded area, and the nearest shear reinforcement taken into account in the design should not exceed *d*/2. This distance should be taken at the level of the tensile reinforcement. If only a single line of bent-up bars is provided, their slope may be reduced to 30°.

9.5 Columns

9.5.1 General

(1) This clause deals with columns for which the larger dimension *h* is not greater than 4 times the smaller dimension *b*.

9.5.2 Longitudinal reinforcement

(1) Longitudinal bars should have a diameter of not less than ϕ_{min}.

Note: The value of ϕ_{min} for use in a Country may be found in its National Annex. The recommended value is 8 mm.

(2) The total amount of longitudinal reinforcement should not be less than $A_{s,min}$.

Note: The value of $A_{s,min}$ for use in a Country may be found in its National Annex. The recommended value is given by Expression (9.12N)

$$A_{s,min} = \frac{0{,}10\ N_{Ed}}{f_{yd}} \text{ or } 0{,}002\ A_c \text{ whichever is the greater} \qquad (9.12N)$$

where:

f_{yd} is the design yield strength of the reinforcement

N_{Ed} is the design axial compression force

(3) The area of longitudinal reinforcement should not exceed $A_{s,max}$.

Note: The value of $A_{s,max}$ for use in a Country may be found in its National Annex. The recommended value is 0,04 A_c outside lap locations unless it can be shown that the integrity of concrete is not affected, and that the full strength is achieved at ULS. This limit should be increased to 0,08 A_c at laps.

(4) For columns having a polygonal cross-section, at least one bar should be placed at each corner. The number of longitudinal bars in a circular column should not be less than four.

9.5.3 Transverse reinforcement

(1) The diameter of the transverse reinforcement (links, loops or helical spiral reinforcement) should not be less than 6 mm or one quarter of the maximum diameter of the longitudinal bars, whichever is the greater. The diameter of the wires of welded mesh fabric for transverse reinforcement should not be less than 5 mm.

(2) The transverse reinforcement should be anchored adequately.

(3) The spacing of the transverse reinforcement along the column should not exceed $s_{cl,tmax}$

Note: The value of $s_{cl,tmax}$ for use in a Country may be found in its National Annex. The recommended value is the least of the following three distances:
- 20 times the minimum diameter of the longitudinal bars
- the lesser dimension of the column
- 400 mm

(4) The maximum spacing required in (3) should be reduced by a factor 0,6:

(i) in sections within a distance equal to the larger dimension of the column cross-section above or below a beam or slab;

(ii) near lapped joints, if the maximum diameter of the longitudinal bars is greater than 14 mm. A minimum of 3 bars evenly placed in the lap length is required.

(5) Where the direction of the longitudinal bars changes, (e.g. at changes in column size), the spacing of transverse reinforcement should be calculated, taking account of the lateral forces involved. These effects may be ignored if the change of direction is less than or equal to 1 in 12.

(6) Every longitudinal bar or bundle of bars placed in a corner should be held by transverse reinforcement. No bar within a compression zone should be further than 150 mm from a restrained bar.

9.6 Walls

9.6.1 General

(1) This clause refers to reinforced concrete walls with a length to thickness ratio of 4 or more and in which the reinforcement is taken into account in the strength analysis. The amount and proper detailing of reinforcement may be derived from a strut-and-tie model (see 6.5). For walls subjected predominantly to out-of-plane bending the rules for slabs apply (see 9.3).

9.6.2 Vertical reinforcement

(1) The area of the vertical reinforcement should lie between $A_{s,vmin}$ and $A_{s,vmax}$.

Note 1: The value of $A_{s,vmin}$ for use in a Country may be found in its National Annex. The recommended value is 0,002 A_c.

Note 2: The value of $A_{s,vmax}$ for use in a Country may be found in its National Annex. The recommended value is 0,04 A_c outside lap locations unless it can be shown that the concrete integrity is not affected and that the full strength is achieved at ULS. This limit may be doubled at laps.

(2) Where the minimum area of reinforcement, $A_{s,vmin}$, controls in design, half of this area should be located at each face.

(3) The distance between two adjacent vertical bars shall not exceed 3 times the wall thickness or 400 mm whichever is the lesser.

9.6.3 Horizontal reinforcement

(1) Horizontal reinforcement running parallel to the faces of the wall (and to the free edges) should be provided at each surface. It should not be less than $A_{s,hmin}$.

Note: The value of $A_{s,hmin}$ for use in a Country may be found in its National Annex. The recommended value is either 25% of the vertical reinforcement or 0,001 A_c, whichever is greater.

Licensed copy:University of Wales Trinity Saint David, 12/03/2020, Uncontrolled Copy, © BSI

(2) The spacing between two adjacent horizontal bars should not be greater than 400 mm.

9.6.4 Transverse reinforcement

(1) In any part of a wall where the total area of the vertical reinforcement in the two faces exceeds 0,02 A_c, transverse reinforcement in the form of links should be provided in accordance with the requirements for columns (see 9.5.3). The large dimension referred to in 9.5.3 (4) (i) need not be taken greater than 4 x thickness of wall.

(2) Where the main reinforcement is placed nearest to the wall faces, transverse reinforcement should also be provided in the form of links with at least of 4 per m^2 of wall area.

Note: Transverse reinforcement need not be provided where welded wire mesh and bars of diameter $\phi \leq 16$ mm are used with concrete cover larger than 2ϕ,

9.7 Deep beams

(1) Deep beams (for definition see 5.3.1 (3)) should normally be provided with an orthogonal reinforcement mesh near each face, with a minimum of $A_{s,dbmin}$.

[AC2⟩**Note:** The value of $A_{s,dbmin}$ for use in a Country may be found in its National Annex. The recommended value is $0{,}001A_c$ but not less than 150 mm²/m in each face and each direction. ⟨AC2]

(2) The distance between two adjacent bars of the mesh should not exceed the lesser of twice the deep beam thickness or 300 mm.

(3) Reinforcement, corresponding to the ties considered in the design model, should be fully anchored for equilibrium in the node, see 6.5.4, by bending the bars, by using U-hoops or by anchorage devices, unless a sufficient length is available between the node and the end of the beam permitting an anchorage length of l_{bd}.

9.8 Foundations

9.8.1 Pile caps

(1) The distance from the outer edge of the pile to the edge of the pile cap should be such that the tie forces in the pile cap can be properly anchored. The expected deviation of the pile on site should be taken into account.

(2) Reinforcement in a pile cap should be calculated either by using strut-and-tie or flexural methods as appropriate.

(3) The main tensile reinforcement to resist the action effects should be concentrated in the stress zones between the tops of the piles. A minimum bar diameter ϕ_{min} should be provided. If the area of this reinforcement is at least equal to the minimum reinforcement, evenly distributed bars along the bottom surface of the member may be omitted. Also the sides and the top surface of the member may be unreinforced if there is no risk of tension developing in these parts of the member.

Note: The value of ϕ_{min} for use in a Country may be found in its National Annex. The recommended value is 8 mm.

(4) Welded transverse bars may be used for the anchorage of the tension reinforcement. In this case the transverse bar may be considered to be part of the transverse reinforcement in the anchorage zone of the reinforcement bar considered.

Licensed copy:University of Wales Trinity Saint David, 12/03/2020, Uncontrolled Copy, © BSI

(5) The compression caused by the support reaction from the pile may be assumed to spread at 45 degree angles from the edge of the pile (see Figure 9.11). This compression may be taken into account when calculating the anchorage length.

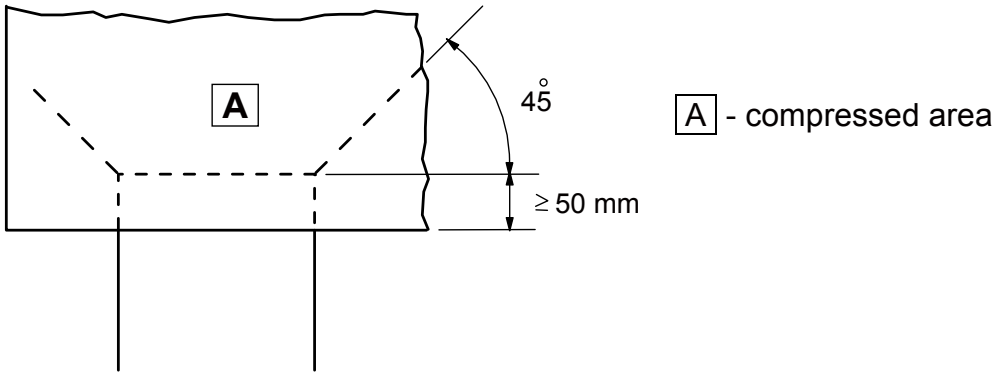

Figure 9.11: Compressed area increasing the anchorage capacity

9.8.2 Column and wall footings

9.8.2.1 General

(1) The main reinforcement should be anchored in accordance with the requirements of 8.4 and 8.5. A minimum bar diameter ϕ_{min} should be provided. In footings the design model shown in AC1 9.8.2.2 AC1 may be used.

Note: The value of ϕ_{min} for use in a Country may be found in its National Annex. The recommended value is 8 mm.

(2) The main reinforcement of circular footings may be orthogonal and concentrated in the middle of the footing for a width of 50% ± 10% of the diameter of the footing, see Figure 9.12. In this case the unreinforced parts of the element should be considered as plain concrete for design purposes.

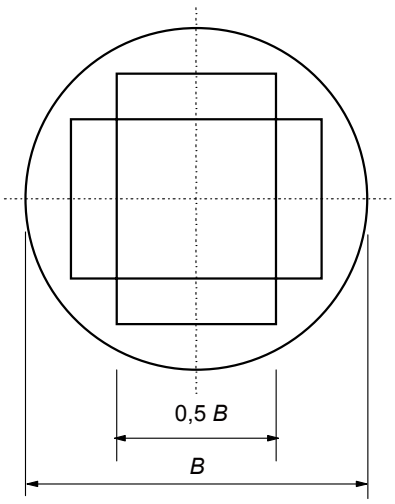

Figure 9.12: Orthogonal reinforcement in circular spread footing on soil

(3) If the action effects cause tension at the upper surface of the footing, the resulting tensile stresses should be checked and reinforced as necessary.

Licensed copy:University of Wales Trinity Saint David, 12/03/2020, Uncontrolled Copy, © BSI

Licensed copy:University of Wales Trinity Saint David, 12/03/2020, Uncontrolled Copy, © BSI

9.8.2.2 Anchorage of bars

(1) The tensile force in the reinforcement is determined from equilibrium conditions, taking into account the effect of inclined cracks, see Figure 9.13. The tensile force F_s at a location x should be anchored in the concrete within the same distance x from the edge of the footing.

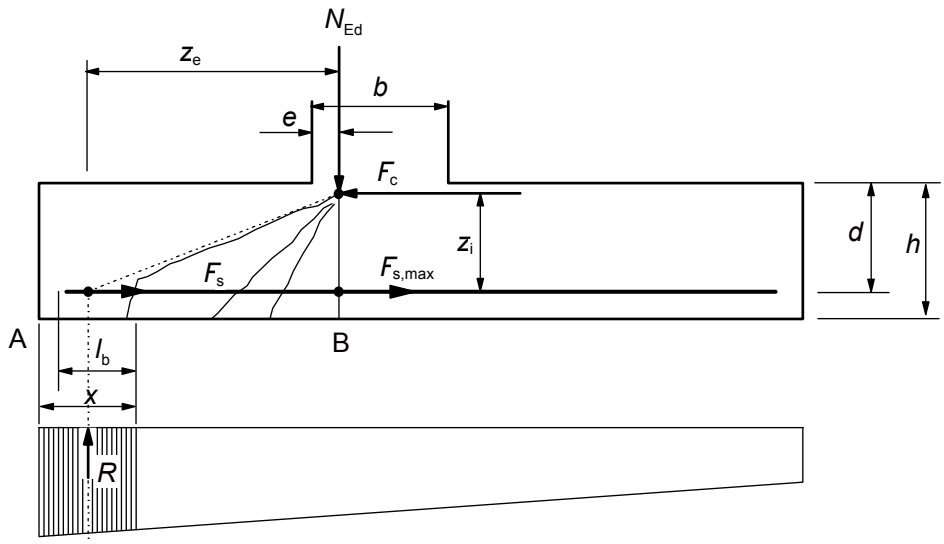

Figure 9.13: Model for tensile force with regard to inclined cracks

(2) The tensile force to be anchored is given by:

$$F_s = R \cdot z_e / z_i \tag{9.13}$$

where:

- R is the resultant of ground pressure within distance x
- z_e is the external lever arm, i.e. distance between R and the vertical force N_{Ed}
- N_{Ed} is the vertical force corresponding to total ground pressure between sections A and B
- z_i is the internal lever arm, i.e. distance between the reinforcement and the horizontal force F_c
- F_c is the compressive force corresponding to maximum tensile force $F_{s,max}$

(3) Lever arms z_e and z_i may be determined with regard to the necessary compression zones for N_{Ed} and F_c respectively. As simplifications, z_e may be determined assuming $e = 0{,}15b$, see Figure 9.13 and z_i may be taken as $0{,}9d$.

(4) The available anchorage length for straight bars is denoted l_b in Figure 9.13. If this length is not sufficient to anchor F_s, bars may either be bent up to increase the available length or be provided with end anchorage devices.

(5) For straight bars without end anchorage the minimum value of x is the most critical. As a simplification $x_{min} = h/2$ may be assumed. For other types of anchorage, higher values of x may be more critical.

Licensed copy:University of Wales Trinity Saint David, 12/03/2020, Uncontrolled Copy, © BSI

9.8.3 Tie beams

(1) Tie beams may be used to eliminate the eccentricity of loading of the foundations. The beams should be designed to resist the resulting bending moments and shear forces. A minimum bar diameter ϕ_{min} for the reinforcement resisting bending moments should be provided.

Note: The value of ϕ_{min} for use in a Country may be found in its National Annex. The recommended value is 8 mm.

(2) Tie beams should also be designed for a minimum downward load of q_1 if the action of compaction machinery can cause effects to the tie beams.

Note: The value of q_1 for use in a Country may be found in its National Annex. The recommended value is 10 kN/m.

9.8.4 Column footing on rock

(1) Adequate transverse reinforcement should be provided to resist the splitting forces in the footing, when the ground pressure in the ultimate states exceeds q_2. This reinforcement may be distributed uniformly in the direction of the splitting force over the height h (see Figure 9.14). A minimum bar diameter, ϕ_{min}, should be provided.

Note: The values of q_2 and of ϕ_{min} for use in a Country may be found in its National Annex. The recommended values of q_2 is 5 MPa and of ϕ_{min} is 8 mm.

(2) The splitting force, F_s, may be calculated as follows (see Figure 9.14) :

$$F_s = 0{,}25\,(1 - c/h)N_{Ed} \qquad (9.14)$$

Where h is the lesser of b and H

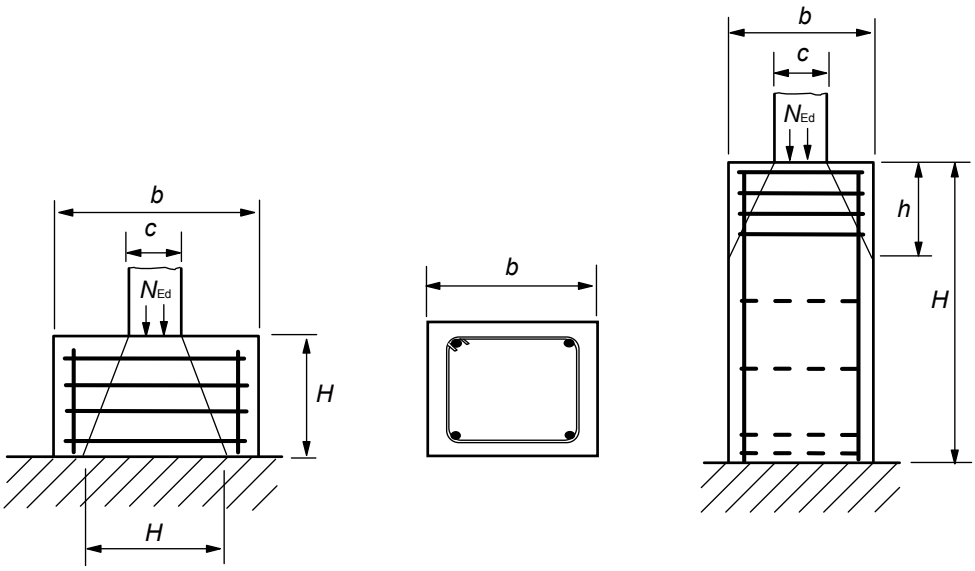

a) footing with $h \geq H$ **b) section** **c) footing with $h < H$**

Figure 9.14: Splitting reinforcement in footing on rock

Licensed copy:University of Wales Trinity Saint David, 12/03/2020, Uncontrolled Copy, © BSI

9.8.5 Bored piles

(1) The following clauses apply for reinforced bored piles. For unreinforced bored piles see Section 12.

(2) In order to allow the free flow of concrete around the reinforcement it is of primary importance that reinforcement, reinforcement cages and any attached inserts are detailed such that the flow of concrete is not adversely affected.

[AC1⟩(3) Bored piles should be provided with a minimum longitudinal reinforcement $A_{s,bpmin}$ related to pile cross section A_c.

Note: The values of $A_{s,bpmin}$ and the associated A_c for use in a country may be found in its national annex. The recommended values are given in Table 9.6N. This reinforcement should be distributed along the periphery of the section.⟨AC1]

Table 9.6N: Recommended minimum longitudinal reinforcement area in cast-in-place bored piles

Pile cross-section: A_c	Minimum area of longitudinal reinforcement: $A_{S,bpmin}$
$A_c \leq 0{,}5$ m²	$A_S \geq 0{,}005 \cdot A_c$
0,5 m² $< A_c \leq 1{,}0$ m²	$A_S \geq 25$ cm^2
$A_c > 1{,}0$ m²	$A_S \geq 0{,}0025 \cdot A_c$

The minimum diameter for the longitudinal bars should not be less than 16 mm. Piles should have at least 6 longitudinal bars. The clear distance between bars should not exceed 200 mm measured along the periphery of the pile.

(4) For the detailing of longitudinal and transverse reinforcement in bored piles, see EN 1536.

9.9 Regions with discontinuity in geometry or action

(1) D-regions should normally be designed with strut-and-tie models according to section 6.5 and detailed according to the rules given in Section 8.

Note: Further information is given in Annex J.

(2)P The reinforcement, corresponding to the ties, shall be fully anchored by an anchorage of l_{bd} according to 8.4.

9.10 Tying systems

9.10.1 General

(1)P Structures which are not designed to withstand accidental actions shall have a suitable tying system, to prevent progressive collapse by providing alternative load paths after local damage. The following simple rules are deemed to satisfy this requirement.

(2) The following ties should be provided:
a) peripheral ties
b) internal ties
c) horizontal column or wall ties
d) where required, vertical ties, particularly in panel buildings.

Licensed copy:University of Wales Trinity Saint David, 12/03/2020, Uncontrolled Copy, © BSI

(3) Where a building is divided by expansion joints into structurally independent sections, each section should have an independent tying system.

(4) In the design of the ties the reinforcement may be assumed to be acting at its characteristic strength and capable of carrying tensile forces defined in the following clauses.

(5) Reinforcement provided for other purposes in columns, walls, beams and floors may be regarded as providing part of or the whole of these ties.

9.10.2 Proportioning of ties

9.10.2.1 General

(1) Ties are intended as a minimum and not as an additional reinforcement to that required by structural analysis.

9.10.2.2 Peripheral ties

(1) At each floor and roof level an effectively continuous peripheral tie within 1,2 m from the edge should be provided. The tie may include reinforcement used as part of the internal tie.

(2) The peripheral tie should be capable of resisting a tensile force:

[AC1⟩ $F_{tie,per} = l_i \cdot q_1 \geq Q_2$ ⟨AC1] (9.15)

where:

$F_{tie,per}$ tie force (here: tension)

l_i length of the end-span

[AC1⟩**Note:** Values of q_1 and Q_2 for use in a Country may be found in its National Annex. The recommended value of q_1 is 10 kN/m and of Q_2 is 70 kN.⟨AC1]

(3) Structures with internal edges (e.g. atriums, courtyards, etc.) should have peripheral ties in the same way as external edges which shall be fully anchored.

9.10.2.3 Internal ties

(1) These ties should be at each floor and roof level in two directions approximately at right angles. They should be effectively continuous throughout their length and should be anchored to the peripheral ties at each end, unless continuing as horizontal ties to columns or walls.

(2) The internal ties may, in whole or in part, be spread evenly in the slabs or may be grouped at or in beams, walls or other appropriate positions. In walls they should be within 0,5 m from the top or bottom of floor slabs, see Figure 9.15.

(3) In each direction, internal ties should be capable of resisting a design value of tensile force $F_{tie,int}$ (in kN per metre width):

Note: Values of $F_{tie,int}$ for use in a Country may be found in its National Annex. The recommended value is 20 kN/m.

(4) In floors without screeds where ties cannot be distributed across the span direction, the transverse ties may be grouped along the beam lines. In this case the minimum force on an internal beam line is:

Licensed copy:University of Wales Trinity Saint David, 12/03/2020, Uncontrolled Copy, © BSI

[AC1] $F_{tie} = q_3 \cdot (l_1 + l_2)/2$ [AC2] $\geq Q_4$ [AC2] [AC1] (9.16)

where:

l_1, l_2 are the span lengths (in m) of the floor slabs on either side of the beam (see Figure 9.15)

[AC2] **Note:** Values of q_3 and Q_4 for use in a Country may be found in its National Annex. The recommended value of q_3 is 20 kN/m and of Q_4 is 70 kN. [AC2]

(5) Internal ties should be connected to peripheral ties such that the transfer of forces is assured.

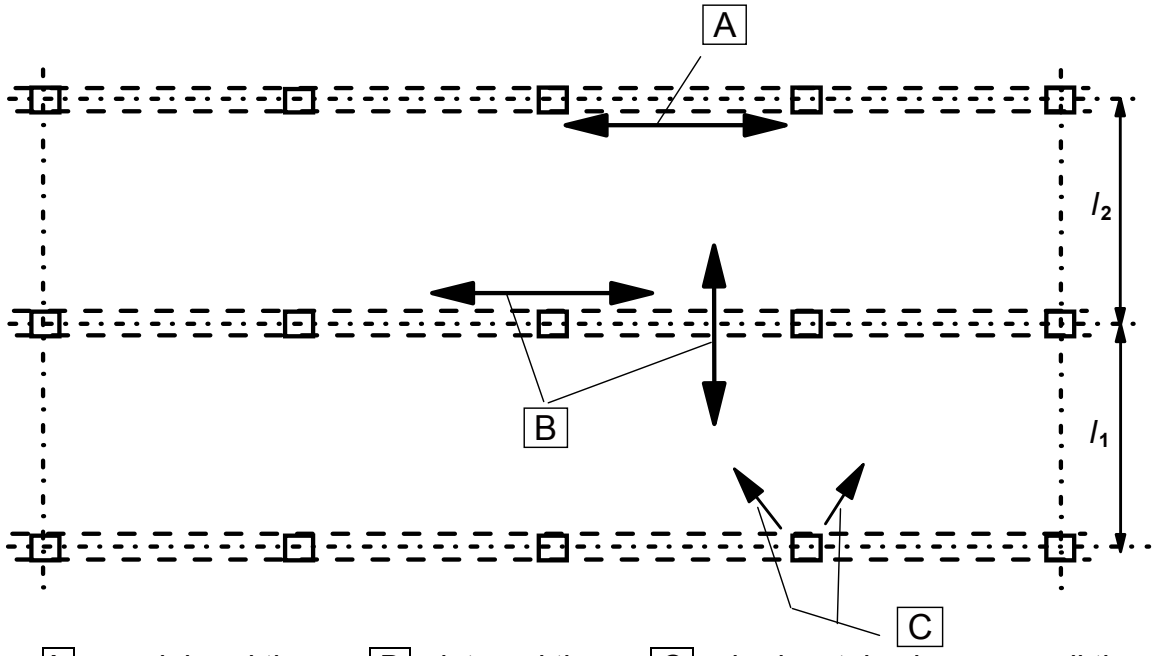

A - peripheral tie B - internal tie C - horizontal column or wall tie

Figure 9.15: Ties for Accidental Actions

9.10.2.4 Horizontal ties to columns and/or walls

(1) Edge columns and walls should be tied horizontally to the structure at each floor and roof level.

(2) The ties should be capable of resisting a tensile force $f_{tie,fac}$ per metre of the façade. For columns the force need not exceed $F_{tie,col}$.

Note: Values of $f_{tie,fac}$ and $F_{tie,col}$ for use in a Country may be found in its National Annex. The recommended value of $f_{tie,fac}$ is 20 kN/m and of $F_{tie,col}$ is 150 kN.

(3) Corner columns should be tied in two directions. Steel provided for the peripheral tie may be used as the horizontal tie in this case.

9.10.2.5 Vertical ties

(1) In panel buildings of 5 storeys or more, vertical ties should be provided in columns and/or walls to limit the damage of collapse of a floor in the case of accidental loss of the column or wall below. These ties should form part of a bridging system to span over the damaged area.

(2) Normally, continuous vertical ties should be provided from the lowest to the highest level, capable of carrying the load in the accidental design situation, acting on the floor above the column/wall accidentally lost. Other solutions e.g. based on the diaphragm action of remaining wall elements and/or on membrane action in floors, may be used if equilibrium and sufficient deformation capacity can be verified.

(3) Where a column or wall is supported at its lowest level by an element other than a foundation (e.g. beam or flat slab) accidental loss of this element should be considered in the design and a suitable alternative load path should be provided.

9.10.3 Continuity and anchorage of ties

(1)P Ties in two horizontal directions shall be effectively continuous and anchored at the perimeter of the structure.

(2) Ties may be provided wholly within the insitu concrete topping or at connections of precast members. Where ties are not continuous in one plane, the bending effects resulting from the eccentricities should be considered.

(3) Ties should not normally be lapped in narrow joints between precast units. Mechanical anchorage should be used in these cases.

Licensed copy:University of Wales Trinity Saint David, 12/03/2020, Uncontrolled Copy, © BSI

Licensed copy:University of Wales Trinity Saint David, 12/03/2020, Uncontrolled Copy, © BSI

SECTION 10 ADDITIONAL RULES FOR PRECAST CONCRETE ELEMENTS AND STRUCTURES

10.1 General

(1)P The rules in this section apply to buildings made partly or entirely of precast concrete elements, and are supplementary to the rules in other sections. Additional matters related to detailing, production and assembly are covered by specific product standards.

Note: Headings are numbered 10 followed by the number of the corresponding main section. Headings of lower level are numbered consecutively, without connection to sub-headings in previous sections.

10.1.1 Special terms used in this section

Precast element: element manufactured in a factory or a place other than the final position in the structure, protected from adverse weather conditions

Precast product: precast element manufactured in compliance with a specific CEN standard

Composite element: element comprising in-situ and precast concrete with or without reinforcement connectors

Rib and block floor: consists of precast ribs (or beams) with an infill between them, made of blocks, hollow clay pots or other forms of permanent shuttering, with or without an in-situ topping

Diaphragm: plane member which is subjected to in-plane forces; may consist of several precast units connected together

Tie: in the context of precast structures, a ties is a tensile member, effectively continuous, placed in a floor, wall or column

Isolated precast member: member for which, in case of failure, no secondary means of load transfer is available

Transient situation in precast concrete construction includes
- demoulding
- transport to the storage yard
- storage (support and load conditions)
- transport to site
- erection (hoisting)
- construction (assembly)

10.2 Basis of design, fundamental requirements

(1)P In design and detailing of precast concrete elements and structures, the following shall be considered specifically:

- transient situations (see 10.1.1)
- bearings; temporary and permanent
- connections and joints between elements

(2) Where relevant, dynamic effects in transient situations should be taken into account. In the absence of an accurate analysis, static effects may be multiplied by an appropriate factor (see also product standards for specific types of precast products).

Licensed copy:University of Wales Trinity Saint David, 12/03/2020, Uncontrolled Copy, © BSI

(3) Where required, mechanical devices should be detailed in order to allow ease of assembly, inspection and replacement.

10.3 Materials

10.3.1 Concrete

10.3.1.1 Strength

(1) For precast products in continuous production, subjected to an appropriate quality control system according to the product standards, with the concrete tensile strength tested, a statistical analysis of test results may be used as a basis for the evaluation of the tensile strength that is used for serviceability limit states verifications, as an alternative to Table 3.1.

(2) Intermediate strength classes within Table 3.1 may be used.

(3) In the case of heat curing of precast concrete elements, the compressive strength of [AC1] concrete at an age t before 28 days, $f_{cm}(t)$, may be estimated from Expression (3.1) in which the [AC1] concrete age t is substituted by the temperature adjusted concrete age obtained by Expression (B.10) of Annex B.

Note: The coefficient $\beta_{cc}(t)$ should be limited to 1.

For the effect of heat curing Expression (10.1) may be used:

$$f_{cm}(t) = f_{cmp} + \frac{f_{cm} - f_{cmp}}{\log(28 - t_p + 1)} \log(t - t_p + 1) \tag{10.1}$$

Where f_{cmp} is the mean compressive strength after the heat curing (i.e. at the release of the prestress), measured by testing of samples at the time t_p ($t_p < t$), that went through the same heat treatment with the precast elements.

10.3.1.2 Creep and shrinkage

(1) In the case of a heat curing of the precast concrete elements, it is permitted to estimate the values of creep deformations according to the maturity function, Expression (B.10) of Annex B.

(2) In order to calculate the creep deformations, the age of concrete at loading t_0 (in days) in Expression (B.5) should be replaced by the equivalent concrete age obtained by Expressions (B.9) and (B.10) of Annex B.

(3) In precast elements subjected to heat curing it may be assumed that:
a) the shrinkage strain is not significant during heat curing and
b) autogenous shrinkage strain is negligible.

10.3.2 Prestressing steel

[AC1] 10.3.2.1 Technological properties of prestressing steel [AC1]

(1)P For pre-tensioned members, the effect on the relaxation losses of increasing the temperature while curing the concrete, shall be considered.

Note: The relaxation is accelerated during the application of a thermal curing when a thermal strain is introduced at the same time. Finally, the relaxation rate is reduced at the end of the treatment.

(2) An equivalent time t_{eq} should be added to the time after tensioning t in the relaxation time functions, given in 3.3.2(7), to cater for the effects of the heat treatment on the prestress loss due to the relaxation of the prestressing steel. The equivalent time can be estimated from Expression (10.2):

$$t_{eq} = \frac{1{,}14^{T_{max}-20}}{T_{max}-20} \sum_{i=1}^{n} \left(T_{(\Delta t_i)} - 20\right) \Delta t_i \qquad (10.2)$$

where

t_{eq} is the equivalent time (in hours)

$T_{(\Delta ti)}$ is the temperature (in °C) during the time interval Δt_i

T_{max} is the maximum temperature (in °C) during the heat treatment

10.5 Structural analysis

10.5.1 General

(1)P The analysis shall account for:

- the behaviour of the structural units at all stages of construction using the appropriate geometry and properties for each stage, and their interaction with other elements (e.g. composite action with in-situ concrete, other precast units);
- the behaviour of the structural system influenced by the behaviour of the connections between elements, with particular regard to actual deformations and strength of connections;
- the uncertainties influencing restraints and force transmission between elements arising from deviations in geometry and in the positioning of units and bearings.

(2) Beneficial effects of horizontal restraint caused by friction due to the weight of any supported element may only be used in non seismic zones (using $\gamma_{G,inf}$) and where:

- the friction is not solely relied upon for overall stability of the structure;
- the bearing arrangements preclude the possibility of accumulation of irreversible sliding of the elements, such as caused by uneven behaviour under alternate actions (e.g. cyclic thermal effects on the contact edges of simply supported elements);
- the possibility of significant impact loading is eliminated

(3) The effects of horizontal movements should be considered in design with respect to the resistance of the structure and the integrity of the connections.

10.5.2 Losses of prestress

(1) In the case of heat curing of precast concrete elements, the lessening of the tension in the tendons and the restrained dilatation of the concrete due to the temperature, induce a specific thermal loss ΔP_θ. This loss may be estimated by the Expression (10.3):

$$\Delta P_\theta = 0{,}5\, A_p\, E_p\, \alpha_c\, (T_{max} - T_o) \qquad (10.3)$$

Where

A_p is the cross-section of tendons

E_p is the elasticity modulus of tendons

Licensed copy:University of Wales Trinity Saint David, 12/03/2020, Uncontrolled Copy, © BSI

Licensed copy:University of Wales Trinity Saint David, 12/03/2020, Uncontrolled Copy, © BSI

[AC1] α_C is the linear coefficient of thermal expansion for concrete (see 3.1.3(5)) [AC1]

$T_{max} - T_0$ is the difference between the maximum and initial temperature in the concrete near the tendons, in °C

Note: Any loss of prestress, ΔP_θ, caused by elongation due to heat curing may be ignored if preheating of the tendons is applied.

10.9 Particular rules for design and detailing

10.9.1 Restraining moments in slabs

(1) Restraining moments may be resisted by top reinforcement placed in the topping or in plugs in open cores of hollow core units. In the former case the horizontal shear in the connection should be checked according to 6.2.5. In the latter case the transfer of force between the in situ concrete plug and the hollow core unit should be verified according to 6.2.5. The length of the top reinforcement should be in accordance with 9.2.1.3.

(2) Unintended restraining effects at the supports of simply supported slabs should be considered by special reinforcement and/or detailing.

10.9.2 Wall to floor connections

(1) In wall elements installed over floor slabs, reinforcement should normally be provided for possible eccentricities and concentrations of the vertical load at the end of the wall. For floor elements see 10.9.1 (2).

(2) No specific reinforcement is required provided the vertical load per unit length is $\leq 0{,}5h.f_{cd}$, where h is the wall thickness, see Figure 10.1. The load may be increased to $0{,}6h.f_{cd}$ with reinforcement according to Figure 10.1, having diameter $\phi \geq 6$ mm and spacing s not greater than the lesser of h and 200 mm. For higher loads, reinforcement should be designed according to (1). A separate check should be made for the lower wall.

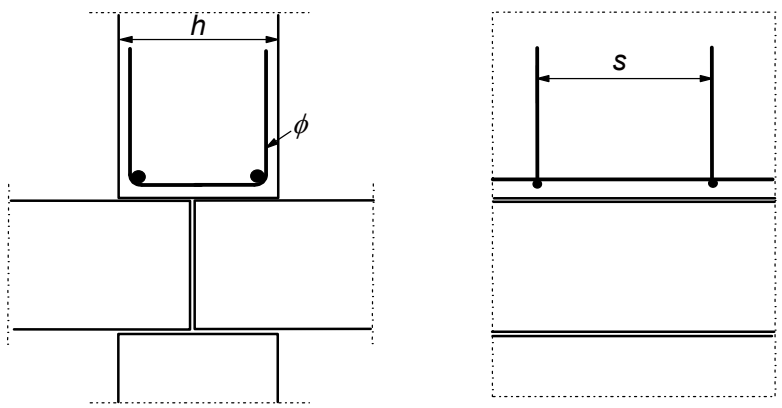

Figure 10.1: Example of reinforcement in a wall over a connection between two floor slabs.

10.9.3 Floor systems

(1)P The detailing of floor systems shall be consistent with assumptions in analysis and design. Relevant product standards shall be considered.

Licensed copy:University of Wales Trinity Saint David, 12/03/2020, Uncontrolled Copy, © BSI

(2)P Where transverse load distribution between adjacent units has been taken into account, appropriate shear connection shall be provided.

(3)P The effects of possible restraints of precast units shall be considered, even if simple supports have been assumed in design.

(4) Shear transfer in connections may be achieved in different ways. Three main types of connections shown in Figure 10.2.

(5) Transverse distribution of loads should be based on analysis or tests, taking into account possible load variations between precast elements. The resulting shear force between floor units should be considered in the design of connections and adjacent parts of elements (e.g. outside ribs or webs).

For floors with uniformly distributed load, and in the absence of a more accurate analysis, this shear force per unit length may be taken as:

$$v_{Ed} = q_{Ed} \cdot b_e / 3 \qquad (10.4)$$

where:

q_{Ed} is the design value of variable load (kN/m^2)

b_e is the width of the element

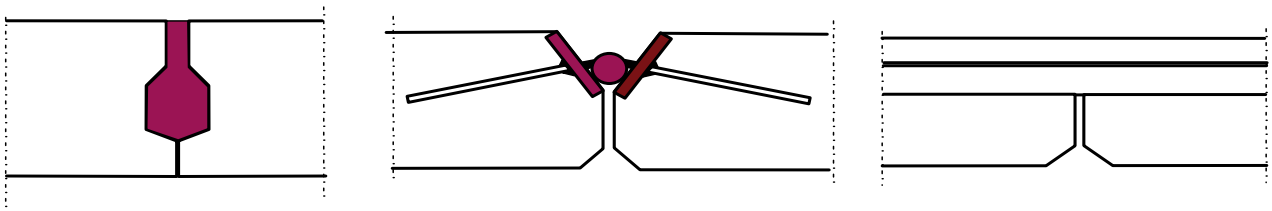

a) concreted or grouted connections

b) welded or bolted connections (this shows *one* type of *welded* connection as an example)

c) reinforced topping. (vertical reinforcement connectors to topping may be required to ensure shear transfer at ULS)

Figure 10.2: Examples of connections for shear transfer

(6) Where precast floors are assumed to act as diaphragms to transfer horizontal loads to bracing units, the following should be considered:

- the diaphragm should form part of a realistic structural model, taking into account the deformation compatibility with bracing units,
- the effects of horizontal deformations should be taken into account for all parts of the structure involved in the transfer of horizontal loads,
- the diaphragm should be reinforced for the tensile forces assumed in the structural model,
- stress concentrations at openings and connections should be taken into account in the detailing of reinforcement.

(7) Transverse reinforcement for shear transfer across connections in the diaphragm may be concentrated along supports, forming ties consistent with the structural model. This reinforcement may be placed in the topping, if it exists.

Licensed copy:University of Wales Trinity Saint David, 12/03/2020, Uncontrolled Copy, © BSI

(8) Precast units with a topping of at least 40 mm may be designed as composite members, if shear in the interface is verified according to 6.2.5. The precast unit should be checked at all stages of construction, before and after composite action has become effective.

(9) Transverse reinforcement for bending and other action effects may lie entirely within the topping. The detailing should be consistent with the structural model, e.g. if two-way spanning is assumed.

(10) Webs or ribs in isolated slab units (i.e. units which are not connected for shear transfer) should be provided with shear reinforcement as for beams.

(11) Floors with precast ribs and blocks without topping may be analysed as solid slabs, if the insitu transverse ribs are provided with continuous reinforcement through the precast longitudinal ribs and at a spacing s_T according to Table 10.1.

(12) In diaphragm action between precast slab elements with concreted or grouted connections, the average longitudinal shear stress v_{Rdi} should be limited to 0,1 MPa for very smooth surfaces, and to 0,15 MPa for smooth and rough surfaces. See 6.2.5 for definition of surfaces.

Table 10.1: Maximum spacing of transverse ribs, s_T for the analysis of floors with ribs and block as solid slabs. s_L = spacing of longitudinal ribs, l_L = length (span) of longitudinal ribs, h = thickness of ribbed floor

Type of imposed loading	$s_L \leq l_L/8$	$s_L > l_L/8$
Residential, snow	not required	$s_T \leq 12\ h$
Other	$s_T \leq 10\ h$	$s_T \leq 8\ h$

10.9.4 Connections and supports for precast elements

10.9.4.1 Materials

(1)P Materials used for connections shall be:
- stable and durable for the design working life of the structure
- chemically and physically compatible
- protected against adverse chemical and physical influences
- fire resistant to match the fire resistance of the structure.

(2)P Supporting pads shall have strength and deformation properties in accordance with the design assumptions.

(3)P Metal fastenings for claddings, other than in environmental classes X0 and XC1 (Table 4.1) and not protected against the environment, shall be of corrosion resistant material. If inspection is possible, coated material may also be used.

(4)P Before undertaking welding, annealing or cold forming the suitability of the material shall be verified.

Licensed copy:University of Wales Trinity Saint David, 12/03/2020, Uncontrolled Copy, © BSI

10.9.4.2 General rules for design and detailing of connections

(1)P Connections shall be able to resist action effects consistent with design assumptions, to accommodate the necessary deformations and ensure robust behaviour of the structure.

(2)P Premature splitting or spalling of concrete at the ends of elements shall be prevented, taking into account

- relative movements between elements
- deviations
- assembly requirements
- ease of execution
- ease of inspection

(3) Verification of resistance and stiffness of connections may be based on analysis, possibly assisted by testing (for design assisted by testing, see EN 1990, Annex D). Imperfections should be taken into account. Design values based on tests should allow for unfavourable deviations from testing conditions.

10.9.4.3 Connections transmitting compressive forces

(1) Shear forces may be ignored in compression connections if they are less than 10% of the compressive force.

(2) For connections with bedding materials like mortar, concrete or polymers, relative movement between the connected surfaces should be prevented during hardening of the material.

(3) Connections without bedding material (dry connections) should only be used where an appropriate quality of workmanship can be achieved. The average bearing stress between plane surfaces should not exceed 0,3 f_{cd}. Dry connections including curved (convex) surfaces should be designed with due consideration of the geometry.

(4) Transverse tensile stresses in adjacent elements should be considered. They may be due to concentrated compression according to Figure 10.3a, or to the expansion of soft padding according to Figure 10.3b. Reinforcement in case a) may be designed and located according to 6.5. Reinforcement in case b) should be placed close to the surfaces of the adjacent elements.

(5) In the absence of more accurate models, reinforcement in case b) may be calculated in accordance with Expression (10.5):

$$A_s = 0{,}25\ (t / h)\ F_{Ed} / f_{yd} \qquad (10.5)$$

where:
A_s is the reinforcement area in each surface
t is the thickness of padding
h is the dimension of padding in direction of reinforcement
F_{Ed} is the compressive force in connection.

(6) The maximum capacity of compression connections can be determined according to 6.7, or can be based on analysis, possibly assisted by testing (for design assisted testing, see EN 1990).

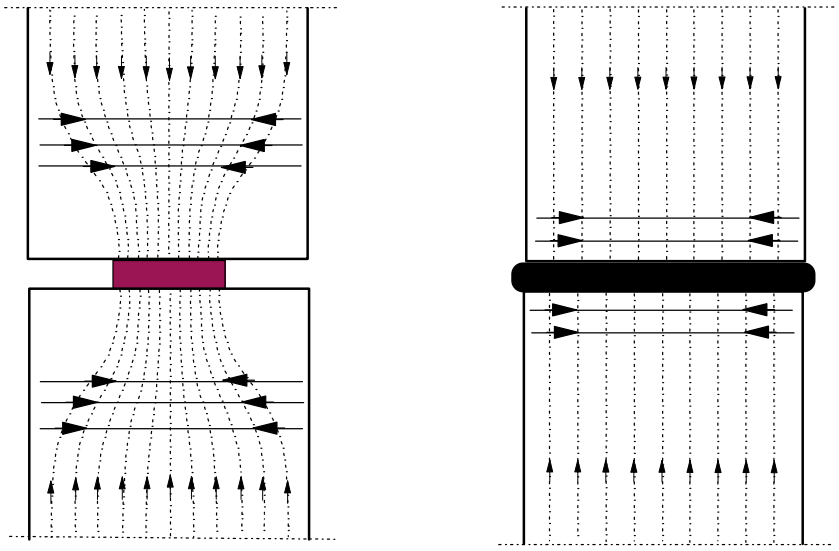

a) Concentrated bearing **b) Expansion of soft padding**

Figure 10.3: Transverse tensile stresses at compression connections.

10.9.4.4 Connections transmitting shear forces

(1) For shear transfer in interfaces between two concretes, e.g. a precast element and in situ concrete, see 6.2.5.

10.9.4.5 Connections transmitting bending moments or tensile forces

(1)P Reinforcement shall be continuous across the connection and anchored in the adjacent elements.

(2) Continuity may be obtained by, for example
- lapping of bars
- grouting of reinforcement into holes
- overlapping reinforcement loops
- welding of bars or steel plates
- prestressing
- mechanical devices (threaded or filled sleeves)
- swaged connectors (compressed sleeves)

10.9.4.6 Half joints

(1) Half joints may be designed using strut-and-tie models according to 6.5. Two alternative models and reinforcements are indicated in Figure 10.4. The two models may be combined.

Note: The figure shows only the main features of strut-and-tie models.

Licensed copy:University of Wales Trinity Saint David, 12/03/2020, Uncontrolled Copy, © BSI

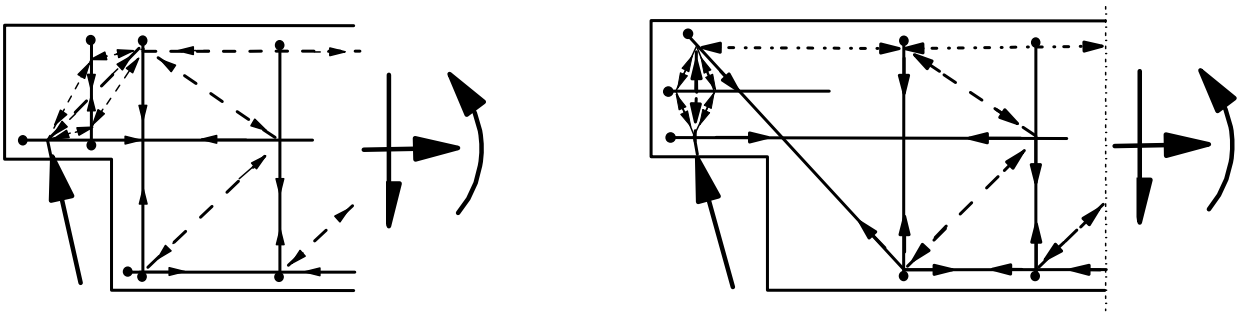

Figure 10.4: Indicative models for reinforcement in half joints.

10.9.4.7 Anchorage of reinforcement at supports

(1) Reinforcement in supporting and supported members should be detailed to ensure anchorage in the respective node, allowing for deviations. An example is shown in Figure 10.5.

The effective bearing length a_1 is controlled by a distance d (see Figure 10.5) from the edge of the respective elements where:

$d_i = c_i + \Delta a_i$ with horizontal loops or otherwise end anchored bars
$d_i = c_i + \Delta a_i + r_i$ with vertically bent bars

Where
c_i is concrete cover
Δa_i is a deviation (see 10.9.5.2 (1)
r_i is the bend radius

See Figure 10.5 and 10.9.5.2 (1) for definitions of Δa_2 or Δa_3.

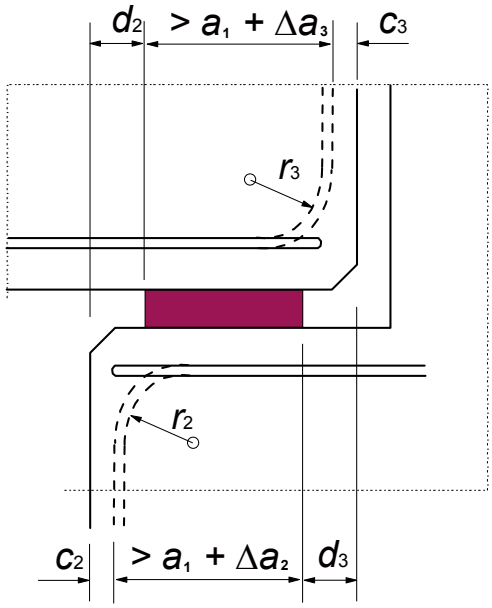

Figure 10.5: Example of detailing of reinforcement in support

Licensed copy:University of Wales Trinity Saint David, 12/03/2020, Uncontrolled Copy, © BSI

Licensed copy:University of Wales Trinity Saint David, 12/03/2020, Uncontrolled Copy, © BSI

10.9.5 Bearings

10.9.5.1 General

(1)P The proper functioning of bearings shall be ensured by reinforcement in adjacent members, limitation of bearing stress and measures to account for movement or restraint.

(2)P For bearings which do not permit sliding or rotation without significant restraint, actions due to creep, shrinkage, temperature, misalignment, lack of plumb etc. shall be taken into account in the design of adjacent members.

(3) The effects of (2)P may require transverse reinforcement in supporting and supported members, and/or continuity reinforcement for tying elements together. They may also influence the design of main reinforcement in such members.

(4)P Bearings shall be designed and detailed to ensure correct positioning, taking into account production and assembling deviations.

(5)P Possible effects of prestressing anchorages and their recesses shall be taken into account.

10.9.5.2 Bearings for connected (non-isolated) members

(1) The nominal length a of a simple bearing as shown in Figure 10.6 may be calculated as:

$$a = a_1 + a_2 + a_3 + \sqrt{\Delta a_2^{\,2} + \Delta a_3^{\,2}} \qquad (10.6)$$

where:

- a_1 is the net bearing length with regard to bearing stress, $a_1 = F_{Ed} / (b_1 f_{Rd})$, but not less than minimum values in Table 10.2
- F_{Ed} is the design value of support reaction
- b_1 is the net bearing width, see (3)
- f_{Rd} is the design value of bearing strength, see (2)
- a_2 is the distance assumed ineffective beyond outer end of supporting member, see Figure 10.6 and Table 10.3
- a_3 is the similar distance for supported member, see Figure 10.6 and Table 10.4

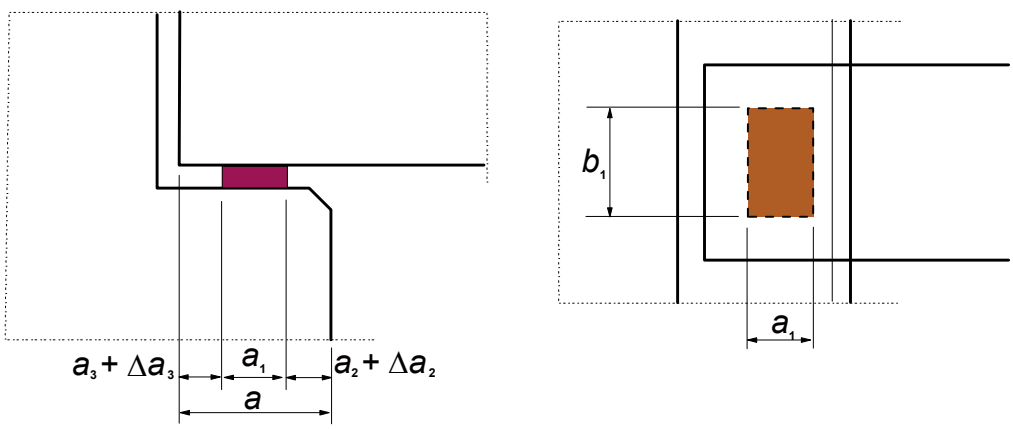

Figure 10.6: Example of bearing with definitions.

Licensed copy:University of Wales Trinity Saint David, 12/03/2020, Uncontrolled Copy, © BSI

Δa_2 is an allowance for deviations for the distance between supporting members, see Table 10.5

Δa_3 is an allowance for deviations for the length of the supported member, $\Delta a_3 = l_n/2500$, l_n is length of member.

Table 10.2: Minimum value of a_1 in mm

Relative bearing stress, σ_{Ed}/f_{cd}	≤ 0,15	0,15 - 0,4	> 0,4
Line supports (floors, roofs)	25	30	40
Ribbed floors and purlins	55	70	80
Concentrated supports (beams)	90	110	140

Table 10.3: Distance a_2 (mm) assumed ineffective from outer end of supporting member. Concrete padstone should be used in cases (-)

AC2

Support material and type	σ_{Ed}/f_{cd}	≤ 0,15	0,15 - 0,4	> 0,4
Steel	line	0	0	10
	concentrated	5	10	15
Reinforced concrete ≥ C30/37	line	5	10	15
	concentrated	10	15	25
Plain concrete and rein. concrete < C30/37	line	10	15	25
	concentrated	20	25	35
Brickwork	line	10	15	(-)
	concentrated	20	25	(-)

AC2

Table 10.4: Distance a_3 (mm) assumed ineffective beyond outer end of supported member

Detailing of reinforcement	Support	
	Line	Concentrated
Continuous bars over support (restrained or not)	0	0
Straight bars, horizontal loops, close to end of member	5	15, but not less than end cover
Tendons or straight bars exposed at end of member	5	15
Vertical loop reinforcement	15	end cover + inner radius of bending

Table 10.5: Allowance Δa_2 for deviations for the clear distance between the faces of the supports. l = span length

Support material	Δa_2
Steel or precast concrete	$10 \le l/1200 \le 30$ mm
Brickwork or cast in-situ concrete	$15 \le l/1200 + 5 \le 40$ mm

(2) In the absence of other specifications, the following values can be used for the bearing strength:

$f_{Rd} = 0{,}4\ f_{cd}$ for dry connections (see 10.9.4.3 (3) for definition)

$f_{Rd} = f_{bed} \leq 0{,}85\ f_{cd}$ for all other cases

where
f_{cd} is the the lower of the design strengths for supported and supporting member
f_{bed} is the design strength of bedding material

(3) If measures are taken to obtain a uniform distribution of the bearing pressure, e.g. with mortar, neoprene or similar pads, the design bearing width b_1 may be taken as the actual width of the bearing. Otherwise, and in the absence of a more accurate analysis, b_1 should not be greater than to 600 mm.

10.9.5.3 Bearings for isolated members

(1)P The nominal length shall be 20 mm greater than for non-isolated members.

(2)P If the bearing allows movements in the support, the net bearing length shall be increased to cover possible movements.

(3)P If a member is tied other than at the level of its bearing, the net bearing length a_1 shall be increased to cover the effect of possible rotation around the tie.

10.9.6 Pocket foundations

10.9.6.1 General

(1)P Concrete pockets shall be capable of transferring vertical actions, bending moments and horizontal shears from columns to the soil. The pocket shall be large enough to enable a good concrete filling below and around the column.

10.9.6.2 Pockets with keyed surfaces

(1) Pockets expressly wrought with indentations or keys may be considered to act monolithically with the column.

(2) Where vertical tension due to moment transfer occurs careful detailing of the overlap reinforcement of the similarly wrought column and the foundation is needed, allowing for the AC1 separation of the lapped bars. The lap length according to 8.7 should be increased by at least AC1 the horizontal distance between bars in the column and in the foundation (see Figure 10.7 (a)) Adequate horizontal reinforcement for the lapped splice should be provided.

(3) The punching shear design should be as for monolithic column/foundation connections according to 6.4, as shown in Figure 10.7 (a), provided the shear transfer between the column and footing is verified. Otherwise the punching shear design should be as for pockets with smooth surfaces.

Licensed copy:University of Wales Trinity Saint David, 12/03/2020, Uncontrolled Copy, © BSI

10.9.6.3 Pockets with smooth surfaces

(1) The forces and the moment may be assumed to be transferred from column to foundation by compressive forces F_1, F_2 and F_3 through the concrete filling and corresponding friction forces, as shown in Figure 10.7 (b). This model requires
$l \geq 1{,}2\ h$.

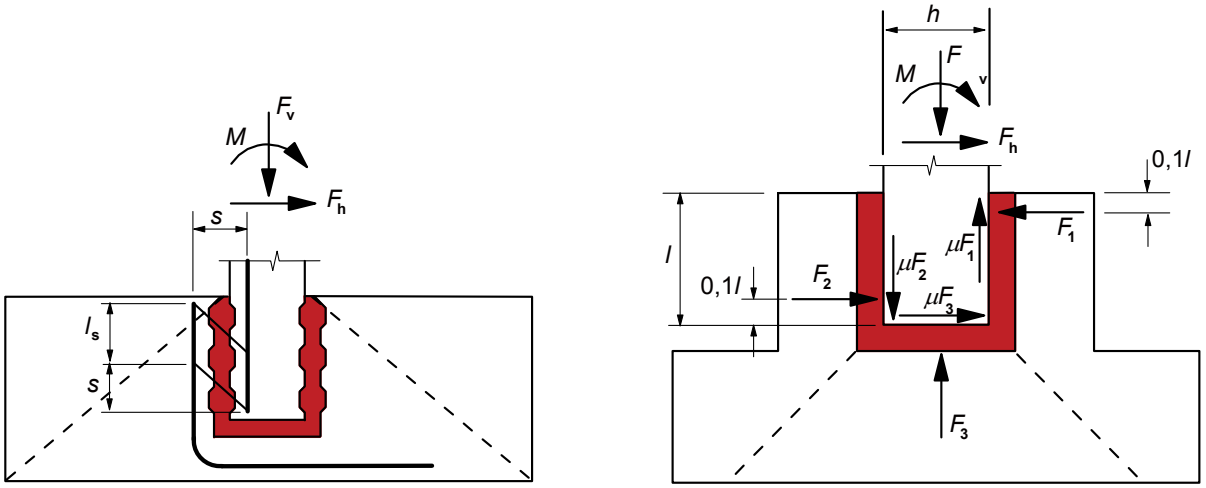

(a) with keyed joint surface **(b) with smooth joint surface**

Figure 10.7: Pocket Foundations

(2) The coefficient of friction should not be taken greater than $\mu = 0{,}3$.

(3) Special attention should be paid to:
- detailing of reinforcement for F_1 in top of pocket walls
- transfer of F_1 along the lateral walls to the footing
- anchorage of main reinforcement in the column and pocket walls
- shear resistance of column within the pocket
- punching resistance of the footing slab under the column force, the calculation for which may take into account the insitu structural concrete placed under the precast element.

10.9.7 Tying systems

(1) For plate elements loaded in their own plane, e.g. in walls and floor diaphragms, the necessary interaction may be obtained by tying the structure together with peripheral and/or internal ties.

The same ties may also act to prevent progressive collapse according to 9.10.

Licensed copy:University of Wales Trinity Saint David, 12/03/2020, Uncontrolled Copy, © BSI

Licensed copy:University of Wales Trinity Saint David, 12/03/2020, Uncontrolled Copy, © BSI

SECTION 11 LIGHTWEIGHT AGGREGATE CONCRETE STRUCTURES

11.1 General

(1)P This section provides additional requirements for lightweight aggregate concrete (LWAC). Reference is made to the other Sections (1 to 10 and 12) of this document and the Annexes.

Note. Headings are numbered 11 followed by the number of the corresponding main section. Headings of lower level are numbered consecutively, without connection to sub-headings in previous sections. If alternatives are given for Expressions, Figures or Tables in the other sections, the original reference numbers are also prefixed by 11.

11.1.1 Scope

(1)P All clauses of the Sections 1 to 10 and 12 are generally applicable, unless they are substituted by special clauses given in this section. In general, where strength values originating from Table 3.1 are used in Expressions, those values have to be replaced by the corresponding values for lightweight concrete, given in this section in Table 11.3.1.

(2)P Section 11 applies to all concretes with closed structure made with natural or artificial mineral lightweight aggregates, unless reliable experience indicates that provisions different from those given can be adopted safely.

(3) This section does not apply to aerated concrete either autoclaved or normally cured nor lightweight aggregate concrete with an open structure.

(4)P Lightweight aggregate concrete is concrete having a closed structure and a density of not more than 2200 kg/m^3 consisting of or containing a proportion of artificial or natural lightweight aggregates having a particle density of less than 2000 kg/m^3

11.1.2 Special symbols

1(P) The following symbols are used specially for lightweight concrete:

LC the strength classes of lightweight aggregate concrete are preceded by the symbol LC
η_E is a conversion factor for calculating the modulus of elasticity
η_1 is a coefficient for determining tensile strength
η_2 is a coefficient for determining creep coefficient
η_3 is a coefficient for determining drying shrinkage
ρ is the oven-dry density of lightweight aggregate concrete in kg/m^3

For the mechanical properties an additional subscript *l* (lightweight) is used.

11.2 Basis of design

1(P) Section 2 is valid for lightweight concrete without modifications.

Licensed copy:University of Wales Trinity Saint David, 12/03/2020, Uncontrolled Copy, © BSI

11.3 Materials

11.3.1 Concrete

(1)P In EN 206-1 lightweight aggregate ⟦AC1⟩ concrete ⟨AC1⟧ is classified according to its density as shown in Table 11.1. In addition this table gives corresponding densities for plain and reinforced concrete with normal percentages of reinforcement which may be used for design purposes in calculating self-weight or imposed permanent loading. Alternatively, the density may be specified as a taget value.

(2) Alternatively the contribution of the reinforcement to the density may be determined by calculation.

Table 11.1: Density classes and corresponding design densities of LWAC according to EN 206-1

Density class		**1,0**	**1,2**	**1,4**	**1,6**	**1,8**	**2,0**
Density (kg/m^3)		801-1000	1001-1200	1201-1400	1401-1600	1601-1800	1801-2000
Density (kg/m^3)	Plain concrete	1050	1250	1450	1650	1850	2050
	Reinforced concrete	1150	1350	1550	1750	1950	2150

(3) The tensile strength of lightweight aggregate concrete may be obtained by multiplying the f_{ct} values given in Table 3.1 by a coefficient:

$$\eta_1 = 0{,}40 + 0{,}60\rho/2200 \qquad (11.1)$$

where

⟦AC2⟩ ρ is the upper limit of the oven dry density for the relevant class in accordance with Table 11.1 ⟨AC2⟧

11.3.2 Elastic deformation

(1) An estimate of the mean values of the secant modulus E_{lcm} for LWAC may be obtained by multiplying the values in Table 3.1, for normal density concrete, by the following coefficient:

$$\eta_E = (\rho/2200)^2 \qquad (11.2)$$

where ρ denotes the oven-dry density in accordance with EN 206-1 Section 4 (see Table 11.1).

Where accurate data are needed, e.g. where deflections are of great importance, tests should be carried out in order to determine the E_{lcm} values in accordance with ISO 6784.

Note: A Country's National Annex may refer to non-contradictory complementary information.

(2) The coefficient of thermal expansion of LWAC depends mainly on the type of aggregate used and varies over a wide range between about $4{\cdot}10^{-6}$ and $14{\cdot}10^{-6}$/K

For design purposes where thermal expansion is of no great importance, the coefficient of thermal expansion may be taken as $8{\cdot}10^{-6}$/K.

The differences between the coefficients of thermal expansion of steel and lightweight aggregate concrete need not be considered in design.

Licensed copy:University of Wales Trinity Saint David, 12/03/2020, Uncontrolled Copy, © BSI

Table 11.3.1: Stress and deformation characteristics for lightweight concrete

	Strength classes for light weight concrete													Analytical relation/Explanation
f_{lck} (MPa)	12	16	20	25	30	35	40	45	50	55	60	70	80	
$f_{lck,cube}$ *(MPa)*	13	18	22	28	33	38	44	50	55	60	66	77	88	
f_{lcm} (MPa)	17	22	28	33	38	43	48	53	58	63	68	78	88	For $f_{lck} \geq 20$ MPa $f_{lcm} = f_{lck} + 8$ (MPa)
f_{lctm} (MPa)	$f_{lctm} = f_{ctm} \cdot \eta_1$													η_1=0,40+0,60ρ/2200
$f_{lctk,0,05}$ (MPa)	$f_{lctk,0,05} = f_{ctk,0,05} \cdot \eta_1$													5% - fractile
$f_{lctk,0,95}$ (MPa)	$f_{lctk,0,95} = f_{ctk,0,95} \cdot \eta_1$													95% - fractile
E_{lcm} (GPa)	$E_{lcm} = E_{cm} \cdot \eta_E$													$\eta_E = (\rho/2200)^2$
ε_{lc1} (‰)	[AC2⟩ $kf_{lcm}(E_{cm} \cdot \eta_E)$ ⟨AC2] $\begin{cases} k = 1{,}1 \text{ for sanded lightweight aggregate concrete} \\ k = 1{,}0 \text{ for all lightweight aggregate concrete} \end{cases}$													see Figure 3.2
ε_{lcu1}(‰)	ε_{lc1}													see Figure 3.2
ε_{lc2} (‰)	2,0									2,2	2,3	2,4	2,5	see Figure 3.3
ε_{lcu2} (‰)	3,5 η_1									3,1η_1	2,9η_1	2,7η_1	2,6η_1	see Figure 3.3 [AC1⟩ $\lvert\varepsilon_{lcu2}\rvert \geq \lvert\varepsilon_{lc2}\rvert$ ⟨AC1]
n	2,0									1,75	1,6	1,45	1,4	
ε_{lc3}(‰)	1,75									1,8	1,9	2,0	2,2	see Figure 3.4
ε_{lcu3}(‰)	3,5 η_1									3,1η_1	2.9η_1	2.7η_1	2,6η_1	see Figure 3.4 $\lvert\varepsilon_{lcu3}\rvert \geq \lvert\varepsilon_{lc3}\rvert$

Licensed copy:University of Wales Trinity Saint David, 12/03/2020, Uncontrolled Copy, © BSI

11.3.3 Creep and shrinkage

(1) For lightweight aggregate concrete the creep coefficient φ may be assumed equal to the value of normal density concrete multiplied by a factor $(\rho/2200)^2$.

The creep strains so derived should be multiplied by a factor, η_2, given by

η_2 = 1,3 for $f_{lck} \leq$ LC16/18
= 1,0 for $f_{lck} \geq$ LC20/22

(2) The final drying shrinkage values for lightweight concrete can be obtained by multiplying the values for normal density concrete in Table 3.2 by a factor, η_3, given by

η_3 = 1,5 for $f_{lck} \leq$ LC16/18
= 1,2 for $f_{lck} \geq$ LC20/22

(3) The Expressions (3.11), (3.12) and (3.13), which provide information for autogenous shrinkage, give maximum values for lightweight aggregate concretes, where no supply of water from the aggregate to the drying microstructure is possible. If water-saturated, or even partially saturated lightweight aggregate is used, the autogenous shrinkage values will be considerably reduced.

11.3.4 Stress-strain relations for non-linear structural analysis

(1) For lightweight aggregate concrete the values ε_{c1} and ε_{cu1} given in Figure 3.2 should be substituted by ε_{lc1} and ε_{lcu1} given in Table 11.3.1.

11.3.5 Design compressive and tensile strengths

(1)P The value of the design compressive strength is defined as

[AC1] $$f_{lcd} = \alpha_{lcc}\, f_{lck} / \gamma_C \qquad (11.3.15)$$

where γ_C is the partial safety factor for concrete, see [AC2] 2.4.2.4 [AC2], and α_{lcc} is a coefficient according to 3.1.6 (1)P. [AC1]

Note: The value of α_{lcc} for use in a Country may be found in its National Annex. The recommended value is 0,85.

(2)P The value of the design tensile strength is defined as

[AC2] $$f_{lctd} = \alpha_{lct}\, f_{lctk} / \gamma_C \qquad (11.3.16)$$

where γ_C is the partial safety factor for concrete, see 2.4.2.4 and α_{lct} is a coefficient according to 3.1.6 (2)P. [AC2]

Note: The value of α_{lct} for use in a Country may be found in its National Annex. The recommended value is 0,85.

11.3.6 Stress-strain relations for the design of sections

(1) For lightweight aggregate concrete the values ε_{c2} and ε_{cu2} given in Figure 3.3 should be replaced with the values of ε_{lc2} and ε_{lcu2} given in Table 11.3.1.

(2) For lightweight aggregate concrete the values ε_{c3} and ε_{cu3} given in Figure 3.4 should be replaced with the values of ε_{lc3} and ε_{lcu3} given in Table 11.3.1.

11.3.7 Confined concrete

(1) If more precise data are not available, the stress-strain relation shown in Figure 3.6 may be used, with increased characteristic strength and strains according to:

$$f_{lck,c} = f_{lck}\,(1{,}0 + k\sigma_2/f_{lck}) \qquad (11.3.24)$$

Note: The value of k for use in a Country may be found in its National Annex. The recommended value is:
1,1 for lightweight aggregate concrete with sand as the fine aggregate
1,0 for lightweight aggregate (both fine and coarse aggregate) concrete

$$\varepsilon_{lc2,c} = \varepsilon_{lc2}\,(f_{lckc}/f_{lck})^2 \qquad (11.3.26)$$

$$\varepsilon_{lcu2,c} = \varepsilon_{lcu2} + 0{,}2\sigma_2/f_{lck} \qquad (11.3.27)$$

where ε_{lc2} and ε_{lcu2} follow from Table 11.3.1.

11.4 Durability and cover to reinforcement

11.4.1 Environmental conditions

(1) For lightweight aggregate concrete in Table 4.1 the same indicative exposure classes can be used as for normal density concrete.

11.4.2 Concrete cover and properties of concrete

(1)P For lightweight aggregate concrete the values of minimum concrete cover given in Table 4.2 shall be increased by 5 mm.

11.5 Structural analysis

11.5.1 Rotational capacity

[AC1⟩**Note:** For light weight concrete the value of $\theta_{pl,d}$ as shown in Figure 5.6N, should be multiplied by a factor $\varepsilon_{lcu2}/\varepsilon_{cu2}$.⟨AC1]

11.6 Ultimate limit states

11.6.1 Members not requiring design shear reinforcement

(1) The design value of the shear resistance of a lightweight concrete member without shear reinforcement $V_{lRd,c}$ follows from:

[AC1⟩$$V_{lRd,c} = [C_{lRd,c}\eta_1 k(100\rho_l f_{lck})^{1/3} + k_1\sigma_{cp}]\,b_w d \;\geq\; (\eta_1 v_{l,min} + k_1\sigma_{cp})b_w d$$ ⟨AC1] (11.6.2)

[AC2⟩where η_1 is defined in Expression (11.1), f_{lck} is taken from Table 11.3.1 and σ_{cp} is the mean compressive stress in the section due to axial force and prestress, where $\sigma_{cp}<0.2 f_{cd}$.⟨AC2]

Note: The values of $C_{lRd,c}$, $v_{l,min}$ and k_1 for use in a Country may be found in its National Annex. The [AC1⟩recommended value for $C_{lRd,c}$ is $0{,}15/\gamma_C$, for $v_{l,min}$ is $0{,}028\,k^{3/2}f_{ck}^{1/2}$ and that for k_1 is 0,15.⟨AC1]

Licensed copy:University of Wales Trinity Saint David, 12/03/2020, Uncontrolled Copy, © BSI

Licensed copy:University of Wales Trinity Saint David, 12/03/2020, Uncontrolled Copy, © BSI

[AC1]**Table 11.6.1N: Values of $v_{l,min}$ for given values of d and f_{lck}** [AC1]

d (mm)	$v_{l,min}$ (MPa)						
	[AC1] f_{lck} (MPa) [AC1]						
	20	30	40	50	60	70	80
200	0.36	0.44	0.50	0.56	0.61	0.65	0.70
400	0.29	0.35	0.39	0.44	0.48	0.52	0.55
600	0.25	0.31	0.35	0.39	0.42	0.46	0.49
800	[AC1] 0.23 [AC1]	0.28	0.32	0.36	0.39	0.42	0.45
≥ 1000	0.22	0.27	0.31	0.34	0.37	0.40	0.43

(2) The shear force, V_{Ed}, calculated without reduction β (see 6.2.2 (6) should always satisfy the condition:

[AC2] $V_{Ed} = 0{,}5\, b_w\, d\, \nu_1 f_{lcd}$ (11.6.5)

where

ν_l is in accordance with 11.6.2 (1) [AC2]

11.6.2 Members requiring design shear reinforcement

(1) The reduction factor for the crushing resistance of the concrete struts is ν_1.

Note 1: The value of ν_l for use in a Country may be found in its National Annex. The recommended value follows from:

[AC1] $\nu_1 = 0{,}5\, \eta_1 [1 - f_{lck}/250]$ [AC1] (11.6.6N)

[AC2] **Note 2:** For lightweight concrete ν_l should not be modified in accordance with Note 2 of 6.2.3(3). [AC2]

11.6.3 Torsion

11.6.3.1 Design procedure

(1) In Expression (6.30) for lightweight concrete ν is taken equal to ν_1 according to 11.6.2 (1).

11.6.4 Punching

11.6.4.1 Punching shear resistance of slabs or column bases without shear reinforcement

(1) The punching shear resistance per unit area of a lightweight concrete slab follows from

$$v_{lRd,c} = C_{lRd,c}\, k\, \eta_1 (100 \rho_l f_{lck})^{1/3} + k_2\, \sigma_{cp} \geq (\eta_1 v_{l,min} + k_2 \sigma_{cp}) \quad (11.6.47)$$

where

η_1 is defined in Expression (11.1)
$C_{lRd,c}$ see 11.6.1 (1)
$v_{l,min}$ see 11.6.1 (1)

Note: The value k_2 for use in a Country may be found in its National Annex. The recommended value is 0,08

[AC2] (2) The punching shear resistance, v_{lRd}, of lightweight concrete column bases follows from [AC2]

$$v_{lRd,c} = C_{lRd,c}\ \eta_1 k\ (100\rho_l\ f_{lck})^{1/3}\ 2d/a \quad \geq \eta_1\ v_{lmin} \cdot 2d/a \qquad (11.6.50)$$

where

η_1 is defined in Expression (11.1)

[AC1] $\rho_l \geq 0{,}005$ [AC1]

$C_{lRd,c}$ see 11.6.1 (1)

$v_{l,min}$ see 11.6.1 (1)

11.6.4.2 Punching shear resistance of slabs or column bases with shear reinforcement

(1) Where shear reinforcement is required the punching shear resistance is given by

[A1] $v_{lRd,cs} = 0{,}75\ v_{lRd,c} + 1{,}5\ (d / s_r)\ A_{sw} f_{ywd,ef}\ [1 / (u_1\ d)]\ \sin\alpha \leq k_{max} \cdot v_{lRd,c}$ [A1] (11.6.52)

where $v_{lRd,c}$ is defined in Expression (11.6.47) or (11.6.50) whichever is relevant.

(2) Adjacent to the column the punching shear capacity is limited to a maximum of

[AC2] $$V_{Ed} = \frac{V_{Ed}}{u_0 d} \leq V_{lRd,max}$$ [AC2] (11.6.53)

[AC2] The value of $v_{lRd,max}$ for use in a Country may be found in its National Annex.The recommended value is $0{,}4\nu f_{lcd}$, where ν is taken equal to ν_1 defined in expression (11.6.6N) [AC2]

11.6.5 Partially loaded areas

(1) For a uniform distribution of load on an area A_{c0} (see Figure 6.29) the concentrated resistance force may be determined as follows:

$$F_{Rdu} = A_{c0} \cdot f_{lcd} \cdot [A_{c1} / A_{c0}]^{\frac{\rho}{4400}} \leq 3{,}0 \cdot f_{lcd} \cdot A_{c0} \left(\frac{\rho}{2200} \right) \qquad (11.6.63)$$

11.6.6 Fatigue

(1) For fatigue verification of elements made with lightweight aggregated concrete special consideration is required. Reference should be made to a European Technical Approval.

11.7 Serviceability limit states

(1)P The basic ratios of span/effective depth for reinforced concrete members without axial compression, given in 7.4.2, should be reduced by a factor $\eta_E^{0,15}$ when applied to LWAC.

11.8 Detailing of reinforcement - General

11.8.1 Permissible mandrel diameters for bent bars

(1) For lightweight aggregate concrete the mandrel sizes for normal density concrete given in [AC1] 8.3 [AC1] to avoid splitting of the concrete at bends, hoops and loops, should be increased by 50%.

Licensed copy:University of Wales Trinity Saint David, 12/03/2020, Uncontrolled Copy, © BSI

11.8.2 Ultimate bond stress

(1) The design value of the ultimate bond stress for bars in lightweight concrete may be calculated using Expression 8.2, by substituting the value f_{lctd} for f_{ctd}, with $f_{lctd} = f_{lctk,0,05}/\gamma_C$. The values for $f_{lctk,0,05}$ are found in Table 11.3.1.

11.9 Detailing of members and particular rules

(1) The diameter of bars embedded in LWAC should not normally exceed 32 mm. For LWAC bundles of bars should not consist of more than two bars and the equivalent diameter should not exceed 45 mm.

11.10 Additional rules for precast concrete elements and structures

(1) Section 10 may be applied to lightweight aggregate concrete without modifications.

11.12 Plain and lightly reinforced concrete structures

(1) Section 12 may be applied to lightweight aggregate concrete without modifications.

Licensed copy:University of Wales Trinity Saint David, 12/03/2020, Uncontrolled Copy, © BSI

SECTION 12 PLAIN AND LIGHTLY REINFORCED CONCRETE STRUCTURES

12.1 General

(1)P This section provides additional rules for plain concrete structures or where the reinforcement provided is less than the minimum required for reinforced concrete.

Note: Headings are numbered 12 followed by the number of the corresponding main section. Headings of lower level are numbered consecutively, without reference to subheadings in previous sections.

(2) This section applies to members, for which the effect of dynamic actions may be ignored. It does not apply to the effects such as those from rotating machines and traffic loads. Examples of such members include:

- members mainly subjected to compression other than that due to prestressing, e.g. walls, columns, arches, vaults, and tunnels;
- strip and pad footings for foundations;
- retaining walls;
- piles whose diameter is ≥ 600 mm and where $N_{Ed}/A_c \leq 0{,}3f_{ck}$.

(3) Where members are made with lightweight aggregate concrete with closed structure according to Section 11 or for precast concrete elements and structures covered by this Eurocode, the design rules should be modified accordingly.

(4) Members using plain concrete do not preclude the provision of steel reinforcement needed to satisfy serviceability and/or durability requirements, nor reinforcement in certain parts of the members. This reinforcement may be taken into account for the verification of local ultimate limit states as well as for the checks of the serviceability limit states.

12.3 Materials

12.3.1 Concrete: additional design assumptions

(1) Due to the less ductile properties of plain concrete the values for $\alpha_{cc,pl}$ and $\alpha_{ct,pl}$ should be taken to be less than α_{cc} and α_{ct} for reinforced concrete.

Note: The values of $\alpha_{cc,pl}$ and $\alpha_{ct,pl}$ for use in a Country may be found in its National Annex. The recommended value for both is 0,8.

(2) When tensile stresses are considered for the design resistance of plain concrete members, the stress strain diagram (see 3.1.7) may be extended up to the tensile design strength using Expression (3.16) or a linear relationship.

AC1 $$f_{ctd,pl} = \alpha_{ct,pl}\, f_{ctk,0,05}/\gamma_C$$ AC1 (12.1)

(3) Fracture mechanic methods may be used provided it can be shown that they lead to the required level of safety.

12.5 Structural analysis: ultimate limit states

(1) Since plain concrete members have limited ductility, linear analysis with redistribution or a plastic approach to analysis, e.g. methods without an explicit check of the deformation capacity, should not be used unless their application can be justified.

Licensed copy:University of Wales Trinity Saint David, 12/03/2020, Uncontrolled Copy, © BSI

(2) Structural analysis may be based on the non-linear or the linear elastic theory. In the case of a non-linear analysis (e.g. fracture mechanics) a check of the deformation capacity should be carried out.

12.6 Ultimate limit states

12.6.1 Design resistance to bending and axial force

(1) In the case of walls, subject to the provision of adequate construction details and curing, the imposed deformations due to temperature or shrinkage may be ignored.

(2) The stress-strain relations for plain concrete should be taken from 3.1.7.

(3) The axial resistance, N_{Rd}, of a rectangular cross-section with a uniaxial eccentricity, e, in the direction of h_w, may be taken as:

[AC1⟩ $N_{Rd} = \eta f_{cd,pl} \times b \times h_w \times (1\text{-}2e/h_w)$ ⟨AC1] (12.2)

where:

[AC1⟩ $\eta f_{cd,pl}$ is the design effective compressive strength (see 3.1.7 (3) ⟨AC1]
b is the overall width of the cross-section (see Figure 12.1)
h_w is the overall depth of the cross-section
e is the eccentricity of N_{Ed} in the direction h_w.

Note: Where other simplified methods are used they should not be less conservative than a rigorous method using a stress-strain relationship given in 3.1.7.

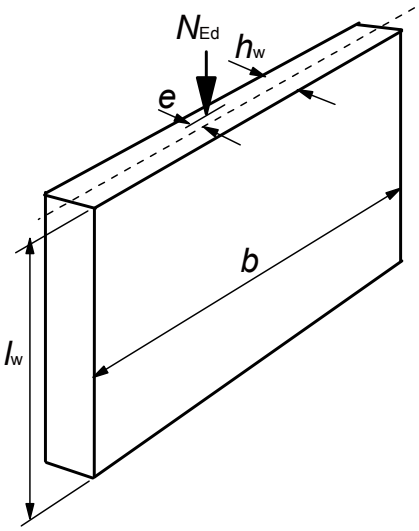

Figure 12.1: Notation for plain walls

12.6.2 Local failure

(1)P Unless measures to avoid local tensile failure of the cross-section have been taken, the maximum eccentricity of the axial force N_{Ed} in a cross-section shall be limited to avoid large cracks.

Licensed copy:University of Wales Trinity Saint David, 12/03/2020, Uncontrolled Copy, © BSI

12.6.3 Shear

(1) In plain concrete members account may be taken of the concrete tensile strength in the ultimate limit state for shear, provided that either by calculations or by experience brittle failure can be excluded and adequate resistance can be ensured.

(2) For a section subject to a shear force V_{Ed} and a normal force N_{Ed} acting over a compressive area A_{cc} the absolute value of the components of design stress should be taken as:

$$\sigma_{cp} = N_{Ed} / A_{cc} \tag{12.3}$$

$$\tau_{cp} = kV_{Ed} / A_{cc} \tag{12.4}$$

Note: the value of k for use in a Country may be found in its National Annex. The recommended value is 1,5.

and the following should be checked:

$$\tau_{cp} \leq f_{cvd}$$

where:

[AC1] if $\sigma_{cp} \leq \sigma_{c,lim}$ $$f_{cvd} = \sqrt{f_{ctd,pl}^2 + \sigma_{cp} f_{ctd,pl}} \tag{12.5}$$

or

if $\sigma_{cp} > \sigma_{c,lim}$ $$f_{cvd} = \sqrt{f_{ctd,pl}^2 + \sigma_{cp} f_{ctd,pl} - \left(\frac{\sigma_{cp} - \sigma_{c,lim}}{2}\right)^2} \tag{12.6}$$

$$\sigma_{c,lim} = f_{cd,pl} - 2\sqrt{f_{ctd,pl}\left(f_{ctd,pl} + f_{cd,pl}\right)} \tag{12.7}$$

where:

f_{cvd} is the concrete design strength in shear and compression
$f_{cd,pl}$ is the concrete design strength in compression
$f_{ctd,pl}$ is concrete design strength in tension [AC1]

(3) A concrete member may be considered to be uncracked in the ultimate limit state if either it remains completely under compression or if the absolute value of the principal concrete tensile [AC1] stress σ_{ct1} does not exceed $f_{ctd,pl}$. [AC1]

12.6.4 Torsion

(1) Cracked members should not normally be designed to resist torsional moments unless it can be justified otherwise.

12.6.5 Ultimate limit states induced by structural deformation (buckling)

12.6.5.1 Slenderness of columns and walls

(1) The slenderness of a column or wall is given by

$$\lambda = l_0/i \tag{12.8}$$

where:

i is the minimum radius of gyration
l_0 is the effective length of the member which can be assumed to be:

$$l_0 = \beta \cdot l_w \tag{12.9}$$

Licensed copy:University of Wales Trinity Saint David, 12/03/2020, Uncontrolled Copy, © BSI

Licensed copy:University of Wales Trinity Saint David, 12/03/2020, Uncontrolled Copy, © BSI

where:

l_w clear height of the member

β coefficient which depends on the support conditions:
for columns $\beta = 1$ should in general be assumed;
for cantilever columns or walls $\beta = 2$;
for other walls β-values are given in Table 12.1.

Table 12.1: Values of β for different edge conditions

Lateral restraint	Sketch	Expression	Factor β	
along two edges	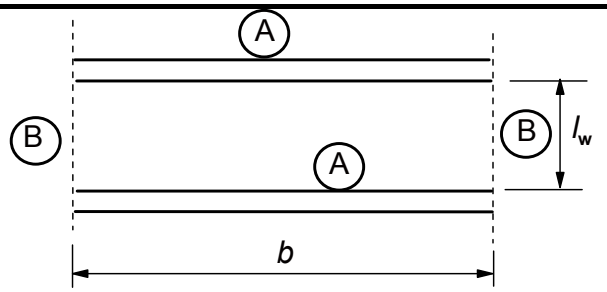		β = 1,0 for any ratio of l_w/b	
Along three edges	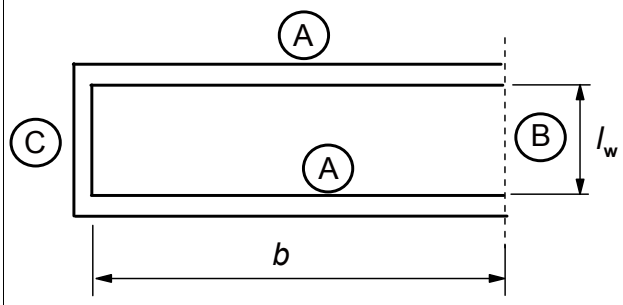	$\beta = \dfrac{1}{1+\left(\dfrac{l_w}{3b}\right)^2}$	b/l_w	β
			0,2	0,26
			0,4	0,59
			0,6	0,76
			0,8	0,85
			1,0	0,90
			1,5	0,95
			2,0	0,97
			5,0	1,00
Along four edges	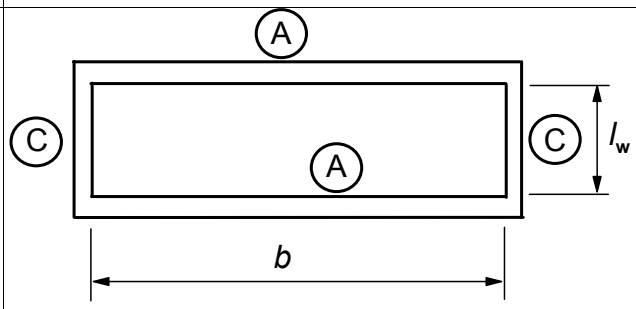	If $b \geq l_w$ $\beta = \dfrac{1}{1+\left(\dfrac{l_w}{b}\right)^2}$ If $b < l_w$ $\beta = \dfrac{b}{2l_w}$	b/l_w	β
			0,2	0,10
			0,4	0,20
			0,6	0,30
			0,8	0,40
			1,0	0,50
			1,5	0,69
			2,0	0,80
			5,0	0,96

Ⓐ - Floor slab Ⓑ - Free edge Ⓒ - Transverse wall

Note: The information in Table 12.1 assumes that the wall has no openings with a height exceeding 1/3 of the wall height l_w or with an area exceeding 1/10 of the wall area. In walls laterally restrained along 3 or 4 sides with openings exceeding these limits, the parts between the openings should be considered as laterally restrained along 2 sides only and be designed accordingly.

(2) The β-values should be increased appropriately if the transverse bearing capacity is affected by chases or recesses.

(3) A transverse wall may be considered as a bracing wall if:
- its total depth is not less than 0,5 h_w, where h_w is the overall depth of the braced wall;
- it has the same height l_w as the braced wall under consideration;
- its length l_{ht} is at least equal to l_w / 5, where l_w denotes the clear height of the braced wall;
- within the length l_w /5 the transverse wall has no openings.

Licensed copy:University of Wales Trinity Saint David, 12/03/2020, Uncontrolled Copy, © BSI

(4) In the case of a wall connected along the top and bottom in flexurally rigid manner by insitu concrete and reinforcement, so that the edge moments can be fully resisted, the values for β given in Table 12.1 may be factored by 0,85.

(5) The slenderness of walls in plain concrete cast insitu should generally not exceed λ = 86 (i.e. l_0/h_w = 25).

12.6.5.2 Simplified design method for walls and columns

[A1] (1) In absence of a more rigorous approach, the design resistance in terms of axial force for a slender wall or column in plain concrete may be calculated as follows:

$$N_{Rd} = b \cdot h_w \cdot f_{cd,pl} \cdot \Phi \qquad (12.10)$$

where

N_{Rd} is the axial resistance;
b is the overall width of the cross-section;
h_w is the overall depth of the cross-section;
Φ is the factor taking into account eccentricity, including second order effects; see below.

For braced members, the factor Φ may be taken as:

$$\Phi = 1{,}14 \cdot (1 - 2 \cdot e_{tot} / h_w) - 0{,}02 \cdot l_0 / h_w \leq 1 - 2 \cdot e_{tot} / h_w \qquad (12.11)$$

where:

$$e_{tot} = e_0 + e_i + e_\varphi \qquad (12.12)$$

e_0 is the first order eccentricity including, where relevant, the effects of floors (e.g. possible clamping moments transmitted to the wall from a slab) and horizontal actions. In determination of e_0 an equivalent first order end moment M_{0e} can be used, see 5.8.8.2 (2);
e_i is the additional eccentricity covering the effects of geometrical imperfections, see 5.2;
e_φ is the eccentricity due to creep.

In some cases, depending on slenderness, the end moment(s) can be more critical for the structure than the equivalent first order end moment M_{0e}. In such cases Expression (12.2) should be used. [A1]

(2) Other simplified methods may be used provided that they are not less conservative than a rigorous method in accordance with 5.8.

12.7 Serviceability limit states

(1) Stresses should be checked where structural restraint is expected to occur.

(2) The following measures to ensure adequate serviceability should be considered:

a) with regard to crack formation:
- limitation of concrete tensile stresses to acceptable values;
- provision of subsidiary structural reinforcement (surface reinforcement, tying system where necessary);
- provision of joints;
- choice of concrete technology (e.g. appropriate concrete composition, curing);
- choice of appropriate method of construction.

Licensed copy:University of Wales Trinity Saint David, 12/03/2020, Uncontrolled Copy, © BSI

b) with regard to limitation of deformations:
- a minimum section size (see 12.9 below);
- limitation of slenderness in the case of compression members.

(3) Any reinforcement provided in plain concrete members, although not taken into account for load bearing purposes, should comply with 4.4.1.

12.9 Detailing of members and particular rules

12.9.1 Structural members

(1) The overall depth h_w of a wall should not be smaller than 120 mm for cast in-situ concrete walls.

(2) Where chases and recesses are included checks should be carried out to assure the adequate strength and stability of the member.

12.9.2 Construction joints

[AC2] (1) Where tensile stresses are expected to occur in concrete, reinforcement should be detailed to control cracking.[AC2]

12.9.3 Strip and pad footings

(1) In the absence of more detailed data, axially loaded strip and pad footings may be designed and constructed as plain concrete provided that:

[AC1] $$\frac{0,85 \cdot h_F}{a} \geq \sqrt{\left(3\sigma_{gd} / f_{ctd,pl}\right)}$$ [AC1] (12.13)

where:

h_F is the foundation depth

a is the projection from the column face (see Figure 12.2)

σ_{gd} is the design value of the ground pressure

[AC1] $f_{ctd,pl}$ [AC1] is the design value of the concrete tensile strength (in the same unit as σ_{gd})

As a simplification the relation $h_F/a \geq 2$ may be used.

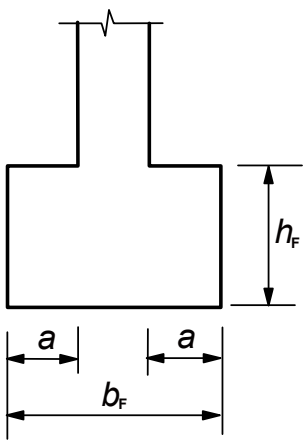

Figure: 12.2: Unreinforced pad footings; notations

Licensed copy:University of Wales Trinity Saint David, 12/03/2020, Uncontrolled Copy, © BSI

Annex A (informative)

Modification of partial factors for materials

A.1 General

(1) The partial factors for materials given in 2.4.2.4 correspond to geometrical deviations of Class 1 in ENV 13670-1 and normal level of workmanship and inspection (e.g. Inspection Class 2 in ENV 13670-1).

(2) Recommendations for reduced partial factors for materials are given in this Informative Annex. More detailed rules on control procedures may be given in product standards for precast elements.

Note: For more information see Annex B of EN 1990.

A.2 In situ concrete structures

A.2.1 Reduction based on quality control and reduced deviations

(1) If execution is subjected to a quality control system, which ensures that unfavourable deviations of cross-section dimensions are within the reduced deviations given in Table A.1, the partial safety factor for reinforcement may be reduced to [AC1] $\gamma_{S,red1}$. [AC1]

Table A.1: Reduced deviations

h or *b* (mm)	Reduced deviations (mm)	
	Cross-section dimension $\pm\Delta h$, Δb (mm)	Position of reinforcement $+\Delta c$ (mm)
≤ 150	5	5
400	10	10
≥ 2500	30	20
Note 1: Linear interpolation may be used for intermediate values. **Note 2:** $+\Delta c$ refers to the mean value of reinforcing bars or prestressing tendons in the cross-section or over a width of one metre (e.g. slabs and walls).		

Note: The value of [AC1] $\gamma_{S,red1}$ [AC1] for use in a Country may be found in its National Annex. The recommended value is 1,1.

(2) Under the condition given in A.2.1 (1), and if the coefficient of variation of the concrete strength is shown not to exceed 10 %, the partial safety factor for concrete may be reduced to [AC1] $\gamma_{C,red1}$. [AC1]

Note: The value of [AC1] $\gamma_{C,red1}$ [AC1] for use in a Country may be found in its National Annex. The recommended value is 1,4.

Licensed copy:University of Wales Trinity Saint David, 12/03/2020, Uncontrolled Copy, © BSI

A.2.2 Reduction based on using reduced or measured geometrical data in design

(1) If the calculation of design resistance is based on critical geometrical data, including effective depth (see Figure A.1), which are either:

- reduced by deviations, or
- measured in the finished structure,

the partial safety factors may be reduced to [AC1⟩ $\gamma_{S,red2}$ and $\gamma_{C,red2}$. ⟨AC1]

[AC1⟩ **Note:** The values of $\gamma_{S,red2}$ and $\gamma_{C,red2}$ for use in a Country may be found in its National Annex. The recommended value of $\gamma_{S,red2}$ is 1,05 and of $\gamma_{C,red2}$ is 1,45. ⟨AC1]

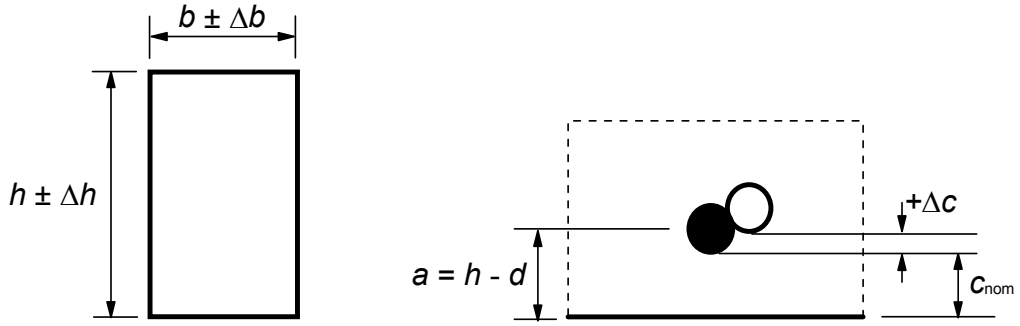

a) Cross section **b) Position of reinforcement** (unfavourable direction for effective depth)

Figure A.1: Cross-section deviations

(2) Under the conditions given in A.2.2 (1) and provided that the coefficient of variation of the concrete strength is shown not to exceed 10%, the partial factor for concrete may be reduced to [AC1⟩ $\gamma_{C,red3}$ ⟨AC1].

Note: The value of [AC1⟩ $\gamma_{C,red3}$ ⟨AC1] for use in a Country may be found in its National Annex. The recommended value is 1,35.

A.2.3 Reduction based on assessment of concrete strength in finished structure

(1) For concrete strength values based on testing in a finished structure or element, see EN 13791[1], EN 206-1 and relevant product standards, [AC1⟩ γ_C ⟨AC1] may be reduced by the conversion factor η.

Note: The value of η for use in a Country may be found in its National Annex. The recommended value is 0,85.

[AC1⟩ The value of γ_C to which this reduction is applied may already be reduced according to A.2.1 or A.2.2. However, the resulting value of the partial factor should not be taken less than $\gamma_{C,red4}$.

Note: The value of $\gamma_{C,red4}$ for use in a Country may be found in its National Annex. The recommended value is 1,3. ⟨AC1]

[1] *EN 13791. Assessment of concrete compressive strength in structures or in structural elements*

Licensed copy:University of Wales Trinity Saint David, 12/03/2020, Uncontrolled Copy, © BSI

A.3 Precast products

A.3.1 General

(1) These provisions apply to precast products as described in Section 10, linked to quality assurance systems and given attestation of conformity.

Note: Factory production control of CE-marked precast products is certified by notified body (Attestation level 2+).

A.3.2 Partial factors for materials

AC1 (1) Reduced partial factors for materials, $\gamma_{C,pcred}$ and $\gamma_{S,pcred}$ may be used in accordance with the rules in A.2, if justified by adequate control procedures. AC1

(2) Recommendations for factory production control required to allow the use of reduced partial factors for materials are given in product standards. General recommendations are given in EN 13369.

A.4 Precast elements

(1) The rules given in A.2 for insitu concrete structures also apply to precast concrete elements as defined in 10.1.1.

Licensed copy:University of Wales Trinity Saint David, 12/03/2020, Uncontrolled Copy, © BSI

ANNEX B (Informative)

Creep and shrinkage strain

B.1 Basic equations for determining the creep coefficient

(1) The creep coefficient $\varphi(t,t_0)$ may be calculated from:

$$\varphi(t,t_0) = \varphi_0 \cdot \beta_c(t,t_0) \tag{B.1}$$

where:

φ_0 is the notional creep coefficient and may be estimated from:

$$\varphi_0 = \varphi_{RH} \cdot \beta(f_{cm}) \cdot \beta(t_0) \tag{B.2}$$

φ_{RH} is a factor to allow for the effect of relative humidity on the notional creep coefficient:

$$\varphi_{RH} = 1 + \frac{1 - RH/100}{0{,}1 \cdot \sqrt[3]{h_0}} \quad \text{for } f_{cm} \leq 35 \text{ MPa} \tag{B.3a}$$

$$\varphi_{RH} = \left[1 + \frac{1 - RH/100}{0{,}1 \cdot \sqrt[3]{h_0}} \cdot \alpha_1\right] \cdot \alpha_2 \quad \text{for } f_{cm} > 35 \text{ MPa} \tag{B.3b}$$

RH is the relative humidity of the ambient environment in %

$\beta(f_{cm})$ is a factor to allow for the effect of concrete strength on the notional creep coefficient:

$$\beta(f_{cm}) = \frac{16{,}8}{\sqrt{f_{cm}}} \tag{B.4}$$

f_{cm} is the mean compressive strength of concrete in MPa at the age of 28 days

$\beta(t_0)$ is a factor to allow for the effect of concrete age at loading on the notional creep coefficient:

$$\beta(t_0) = \frac{1}{(0{,}1 + t_0^{0{,}20})} \tag{B.5}$$

h_0 is the notional size of the member in mm where:

$$h_0 = \frac{2A_c}{u} \tag{B.6}$$

A_c is the cross-sectional area

u is the perimeter of the member in contact with the atmosphere

$\beta_c(t,t_0)$ is a coefficient to describe the development of creep with time after loading, and may be estimated using the following Expression:

$$\beta_c(t,t_0) = \left[\frac{(t-t_0)}{(\beta_H + t - t_0)}\right]^{0,3} \tag{B.7}$$

t is the age of concrete in days at the moment considered
t_0 is the age of concrete at loading in days
$t - t_0$ is the non-adjusted duration of loading in days
β_H is a coefficient depending on the relative humidity (RH in %) and the notional member size (h_0 in mm). It may be estimated from:

$$\beta_H = 1,5\,[1 + (0,012\,RH)^{18}]\,h_0 + 250 \leq 1500 \qquad \text{for } f_{cm} \leq 35 \tag{B.8a}$$

$$\beta_H = 1,5\,[1 + (0,012\,RH)^{18}]\,h_0 + 250\,\alpha_3 \leq 1500\,\alpha_3 \qquad \text{for } f_{cm} \geq 35 \tag{B.8b}$$

$\alpha_{1/2/3}$ are coefficients to consider the influence of the concrete strength:

$$\alpha_1 = \left[\frac{35}{f_{cm}}\right]^{0,7} \quad \alpha_2 = \left[\frac{35}{f_{cm}}\right]^{0,2} \quad \alpha_3 = \left[\frac{35}{f_{cm}}\right]^{0,5} \tag{B.8c}$$

(2) The effect of type of cement (see 3.1.2 (6)) on the creep coefficient of concrete may be taken into account by modifying the age of loading t_0 in Expression (B.5) according to the following Expression:

$$t_0 = t_{0,T} \cdot \left(\frac{9}{2 + t_{0,T}^{1,2}} + 1\right)^{\alpha} \geq 0,5 \tag{B.9}$$

where:
$t_{0,T}$ is the temperature adjusted age of concrete at loading in days adjusted according to Expression (B.10)
α is a power which depends on type of cement
= -1 for cement Class *S*
= 0 for cement Class *N*
= 1 for cement Class *R*

(3) The effect of elevated or reduced temperatures within the range 0 – 80°C on the maturity of concrete may be taken into account by adjusting the concrete age according to the following Expression:

$$t_T = \sum_{i=1}^{n} e^{-(4000/[273+T(\Delta t_i)]-13,65)} \cdot \Delta t_i \tag{B.10}$$

where:
t_T is the temperature adjusted concrete age which replaces t in the corresponding equations
$T(\Delta t_i)$ is the temperature in °C during the time period Δt_i
Δt_i is the number of days where a temperature T prevails.

The mean coefficient of variation of the above predicted creep data, deduced from a computerised data bank of laboratory test results, is of the order of 20%.

Licensed copy:University of Wales Trinity Saint David, 12/03/2020, Uncontrolled Copy, © BSI

The values of $\varphi(t,t_0)$ given above should be associated with the tangent modulus E_c.
When a less accurate estimate is considered satisfactory, the values given in Figure 3.1 of 3.1.4 may be adopted for creep of concrete at 70 years.

B.2 Basic equations for determining the drying shrinkage strain

(1) The basic drying shrinkage strain $\varepsilon_{cd,0}$ is calculated from

$$\varepsilon_{cd,0} = 0{,}85\left[(220 + 110 \cdot \alpha_{ds1}) \cdot \exp\left(-\alpha_{ds2} \cdot \frac{f_{cm}}{f_{cmo}}\right)\right] \cdot 10^{-6} \cdot \beta_{RH} \tag{B.11}$$

$$\beta_{RH} = 1{,}55\left[1 - \left(\frac{RH}{RH_0}\right)^3\right] \tag{B.12}$$

where:

f_{cm} is the mean compressive strength (MPa)
f_{cmo} = 10 Mpa
α_{ds1} is a coefficient which depends on the type of cement (see 3.1.2 (6))
= 3 for cement Class *S*
= 4 for cement Class *N*
= 6 for cement Class *R*
α_{ds2} is a coefficient which depends on the type of cement
= 0,13 for cement Class *S*
= 0,12 for cement Class *N*
= 0,11 for cement Class *R*
RH is the ambient relative humidity (%)
RH_0 = 100%.

Note: exp{ } has the same meaning as $e^{(\ )}$

Licensed copy:University of Wales Trinity Saint David, 12/03/2020, Uncontrolled Copy, © BSI

Licensed copy:University of Wales Trinity Saint David, 12/03/2020, Uncontrolled Copy, © BSI

ANNEX C (Normative)

Properties of reinforcement suitable for use with this Eurocode

C.1 General

(1) Table C.1 gives the properties of reinforcement suitable for use with this Eurocode. The properties are valid for temperatures between -40ºC and 100ºC for the reinforcement in the finished structure. Any bending and welding of reinforcement carried out on site should be further restricted to the temperature range as permitted by EN 13670.

Table C.1: Properties of reinforcement

Product form	Bars and de-coiled rods			Wire Fabrics			Requirement or quantile value (%)
Class	A	B	C	A	B	C	-
Characteristic yield strength f_{yk} or $f_{0,2k}$ (MPa)	400 to 600						5,0
Minimum value of $k = (f_t/f_y)_k$	≥1,05	≥1,08	≥1,15 <1,35	≥1,05	≥1,08	≥1,15 <1,35	10,0
Characteristic strain at maximum force, ε_{uk} (%)	≥2,5	≥5,0	≥7,5	≥2,5	≥5,0	≥7,5	10,0
Bendability	Bend/Rebend test			-			
Shear strength	-			0,25 $A f_{yk}$ (A is area of wire)			Minimum
Maximum deviation from nominal mass (individual bar or wire) (%) — Nominal bar size (mm) ≤ 8	± 6,0						5,0
Maximum deviation from nominal mass (individual bar or wire) (%) — Nominal bar size (mm) > 8	± 4,5						

Note: The values for the fatigue stress range with an upper limit of βf_{yk} and for the Minimum relative rib area for use in a Country may be found in its National Annex. The recommended values are given in Table C.2N. The value of β for use in a Country may be found in its National Annex. The recommended value is 0,6.

Table C.2N: Properties of reinforcement

Product form	Bars and de-coiled rods			Wire Fabrics			Requirement or quantile value (%)
Class	A	B	C	A	B	C	-
Fatigue stress range (MPa) (for N ≥ 2 x 10^6 cycles) with an upper limit of βf_{yk}	≥150			≥100			10,0
Bond: Minimum relative rib area, $f_{R,min}$ — Nominal bar size (mm) 5 - 6	0,035						5,0
Bond: Minimum relative rib area, $f_{R,min}$ — Nominal bar size (mm) 6,5 to 12	0,040						
Bond: Minimum relative rib area, $f_{R,min}$ — Nominal bar size (mm) > 12	0,056						

Fatigue: Exceptions to the fatigue rules for use in a Country may be found in its National Annex. The

Licensed copy:University of Wales Trinity Saint David, 12/03/2020, Uncontrolled Copy, © BSI

recommended exceptions are if the reinforcement is for predominantly static loading or higher values of the fatigue stress range and/or the number of cycles are shown to apply by testing. In the latter case the values in Table 6.3 may be modified accordingly. Such testing should be in accordance with EN 10080.

Bond: Where it can be shown that sufficient bond strength is achievable with f_R values less than specified above, the values may be relaxed. In order to ensure that sufficient bond strength is achieved, the bond stresses [AC1⟩ should ⟨AC1] satisfy the recommended Expressions (C 1N) and (C 2N) when tested using the CEB/RILEM beam test:

$$\tau_m \geq 0{,}098\ (80 - 1{,}2\phi) \qquad \text{(C.1N)}$$

$$\tau_r \geq 0{,}098\ (130 - 1{,}9\phi) \qquad \text{(C.2N)}$$

where:

ϕ is the nominal bar size (mm)

τ_m is the mean value of bond stress (MPa) at 0,01, 0,1 and 1 mm slip

τ_r is the bond stress at failure by slipping

(2) The values of f_{yk}, k and ε_{uk} in Table C.1 are characteristic values. The maximum % of test results falling below the characteristic value is given for each of the characteristic values in the right hand column of Table C.1.

(3) EN10080 does not specify the quantile value for characteristic values, nor the evaluation of test results for individual test units.

In order to be deemed to comply with the long term quality levels in Table C.1, the following limits on test results should be applied:

- where all individual test results of a test unit exceed the characteristic value, (or are below the characteristic value in the case the maximum value of f_{yk} or k) the test unit may be assumed to comply.
- [AC1⟩ the individual values of yield strength f_y and ε_u should be greater than the minimum ⟨AC1] values and less than the maximum values. In addition, the mean value, M, of a test unit should satisfy the equation

$$M \geq C_v + a \qquad \text{(C.3)}$$

where

C_v is the long term characteristic value

a is a coefficient which depends on the parameter considered

Note 1: The value of a for use in a Country may be found in its National Annex. The recommended value for f_{yk} is 10 MPa and for both k and ε_{uk} is 0.

Note 2: The minimum and maximum values of f_{yk}, k and ε_{uk} for use in a Country may be found in its National Annex. The recommended values are given in Table C.3N.

Table C.3N. Absolute limits on test results

Performance characteristic	Minimum value	Maximum value
Yield strength f_{yk}	0,97 x minimum C_v	1,03 x maximum C_v
[AC1⟩ k ⟨AC1]	0,98 x minimum C_v	1,02 x maximum C_v
ε_{uk}	0,80 x minimum C_v	Not applicable

C.2 Strength

(1)P The maximum actual yield stress $f_{y,max}$ shall not exceed $1{,}3f_{yk}$.

C.3 Bendability

(1)P Bendability shall be verified by the bend and rebend tests in accordance with EN 10080 and EN ISO 15630-1. In situations where verification is carried out just using a rebend test the mandrel size shall be no greater than that specified for bending in Table [AC1⟩ 8.1N ⟨AC1] of this Eurocode. In order to ensure bendability [AC2⟩ no cracking shall be visible after the test. ⟨AC2]

Licensed copy:University of Wales Trinity Saint David, 12/03/2020, Uncontrolled Copy, © BSI

Licensed copy:University of Wales Trinity Saint David, 12/03/2020, Uncontrolled Copy, © BSI

ANNEX D (Informative)

Detailed calculation method for prestressing steel relaxation losses

D.1 General

(1) In the case that the relaxation losses are calculated for different time intervals (stages) where the stress in the prestressing tendon is not constant, for example due to the elastic shortening of the concrete, an equivalent time method should be adopted.

(2) The concept of the equivalent time method is presented in the Figure D.1, where at time t_i there is an instantaneous deformation of the prestressing tendon, with:

$\sigma_{p,i}^-$ is the tensile stress in the tendon just before t_i
$\sigma_{p,i}^+$ is the tensile stress in the tendon just after t_i
$\sigma_{p,i-1}^+$ is the tensile stress in the tendon at the preceding stage
$\Delta\sigma_{pr,\,i-1}$ is the absolute value of the relaxation loss during the preceding stage
$\Delta\sigma_{pr,i}$ is the absolute value of the relaxation loss of the stage considered

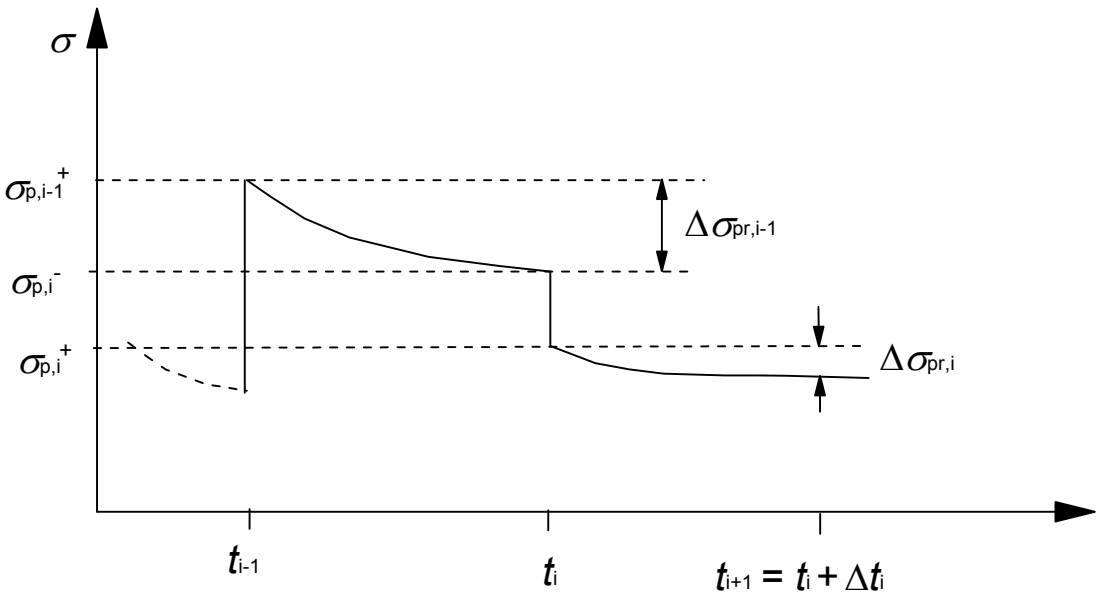

Figure D.1: Equivalent time method

(3) Let $\sum_{1}^{i-1} \Delta\sigma_{pr,j}$ be the sum of all the relaxation losses of the preceding stages and t_e is defined as the equivalent time (in hours) necessary to obtain this sum of relaxation losses that verifies the relaxation time functions in 3.3.2 (7) with an initial stress equal to $\sigma_{p,i}^+ + \sum_{1}^{i-1} \Delta\sigma_{pr,j}$

and with $\mu = \dfrac{\sigma_{p,i}^+ + \sum_{1}^{i-1} \Delta\sigma_{pr,j}}{f_{pk}}$.

AC1 (4) For example, for a Class 2 prestressing tendon t_e, given by Expression (3.29), becomes: AC1

$$\sum_{1}^{i-1} \Delta\sigma_{pr,\,j} = 0{,}66 \quad \rho_{1000} \quad e^{9{,}09\mu} \quad \left(\frac{t_e}{1000}\right)^{0{,}75\,(1-\mu)} \left\{\sigma_{p,i}^{+} + \sum_{1}^{i-1}\Delta \quad \sigma_{pr,\,j}\right\} \; 10^{-5} \qquad \text{(D.1)}$$

(5) After resolving the above equation for t_e, the same formula can be applied in order to estimate the relaxation loss of the stage considered, $\Delta\sigma_{pr,\,i}$ (where the equivalent time t_e is added to the interval of time considered):

$$\Delta\sigma_{pr,\,i} = 0{,}66 \quad \rho_{1000} \quad e^{9{,}09\mu} \quad \left(\frac{t_e + \Delta \quad t_i}{1000}\right)^{0{,}75\,(1-\mu)} \left\{\sigma_{p,i}^{+} + \sum_{1}^{i-1}\Delta \quad \sigma_{pr,\,j}\right\} \; 10^{-5} - \sum_{1}^{i-1}\Delta \quad \sigma_{pr,\,j} \qquad \text{(D.2)}$$

(6) The same principle applies for all three classes of prestressing tendons.

Licensed copy:University of Wales Trinity Saint David, 12/03/2020, Uncontrolled Copy, © BSI

Licensed copy:University of Wales Trinity Saint David, 12/03/2020, Uncontrolled Copy, © BSI

Annex E (Informative)

Indicative strength classes for durability

E.1 General

(1) The choice of adequately durable concrete for corrosion protection of reinforcement and protection of concrete attack, requires consideration of the composition of concrete. This may result in a higher compressive strength of the concrete than is required for structural design. The relationship between concrete strength classes and exposure classes (see Table 4.1) may be described by indicative strength classes.

(2) When the chosen strength is higher than that required for structural design the value of f_{ctm} should be associated with the higher strength in the calculation of minimum reinforcement [AC1⟩ according to 7.3.2 and 9.2.1.1 and crack width control according to 7.3.3 and 7.3.4. ⟨AC1]

Note: Values of indicative strength classes for use in a Country may be found in its National Annex. The recommended values are given in Table E.1N.

[AC2⟩ **Table E.1N: Indicative minimum strength class**

	Exposure Classes according to Table 4.1									
Corrosion										
	Carbonation-induced corrosion				Chloride-induced corrosion			Chloride-induced corrosion from sea-water		
	XC1	XC2	XC3	XC4	XD1	XD2	XD3	XS1	XS2	XS3
Indicative minimum strength class	C20/25	C25/30	C30/37		C30/37		C35/45	C30/37	C35/45	
Damage to Concrete										
	No risk	Freeze/Thaw Attack				Chemical Attack				
	X0	XF1	XF2	XF3		XA1	XA2	XA3		
Indicative minimum strength class	C12/15	C30/37	C25/30	C30/37		C30/37		C35/45		

⟨AC2]

Licensed copy:University of Wales Trinity Saint David, 12/03/2020, Uncontrolled Copy, © BSI

Annex F (Informative)

Tension reinforcement expressions for in-plane stress conditions

F.1 General

(1) This annex does not include expressions for compression reinforcement.

(2) The tension reinforcement in an element subject to in-plane orthogonal stresses σ_{Edx}, σ_{Edy} and τ_{Edxy} may be calculated using the procedure set out below. Compressive stresses should be taken as positive, with $\sigma_{Edx} > \sigma_{Edy}$, and the direction of reinforcement should coincide with the x and y axes.

The tensile strengths provided by reinforcement should be determined from:

$$f_{tdx} = \rho_x f_{yd} \text{ and } f_{tdy} = \rho_y f_{yd} \tag{F.1}$$

where ρ_x and ρ_y are the geometric reinforcement ratios, along the *x* and *y* axes respectively.

(3) In locations where σ_{Edx} and σ_{Edy} are both compressive and $\sigma_{Edx} \cdot \sigma_{Edy} > \tau^2_{Edxy}$, design reinforcement is not required. However the maximum compressive stress should not exceed f_{cd} (See 3.1.6)

(4) In locations where σ_{Edy} is tensile or $\sigma_{Edx} \cdot \sigma_{Edy} \leq \tau^2_{Edxy}$, reinforcement is required.

The optimum reinforcement, indicated by superscript ′, and related concrete stress are determined by:

For $\sigma_{Edx} \leq |\tau_{Edxy}|$

$$f'_{tdx} = |\tau_{Edxy}| - \sigma_{Edx} \tag{F.2}$$

$$f'_{tdy} = |\tau_{Edxy}| - \sigma_{Edy} \tag{F.3}$$

$$\sigma_{cd} = 2|\tau_{Edy}| \tag{F.4}$$

For $\sigma_{Edx} > |\tau_{Edxy}|$

$$f'_{tdx} = 0 \tag{F.5}$$

$$f'_{tdy} = \frac{\tau^2_{Edxy}}{\sigma_{Edx}} - \sigma_{Edy} \tag{F.6}$$

$$\sigma_{cd} = \sigma_{Edx}\left(1 + \left(\frac{\tau_{Edxy}}{\sigma_{Edx}}\right)^2\right) \tag{F.7}$$

The concrete stress, σ_{cd}, should be checked with a realistic model of cracked sections (see EN 1992-2), but should not generally exceed νf_{cd} (ν may be obtained from Expression (6.5).

Note: The minimum reinforcement is obtained if the directions of reinforcement are identical to the directions of the principal stresses.

Alternatively, for the general case the necessary reinforcement and the concrete stress may be

Licensed copy:University of Wales Trinity Saint David, 12/03/2020, Uncontrolled Copy, © BSI

determined by:

$$f_{tdx} = |\tau_{Edxy}|\cot\theta - \sigma_{Edx} \quad \text{(F.8)}$$

$$f_{tdy} = |\tau_{Edxy}|/\cot\theta - \sigma_{Edy} \quad \text{(F.9)}$$

$$\sigma_{cd} = \left|\tau_{Edxy}\right| \left(\cot\theta + \frac{1}{\cot\theta} \right) \quad \text{(F.10)}$$

where θ is the angle of the principal concrete compressive stress to the *x*-axis.

Note: The value of $\text{Cot}\theta$ should be chosen to avoid compression values of f_{td}.

In order to avoid unacceptable cracks for the serviceability limit state, and to ensure the required deformation capacity for the ultimate limit state, the reinforcement derived from Expressions (F.8) and (F.9) for each direction should not be more than twice and not less than half the reinforcement determined by expressions (F2) and (F3) or (F5) and (F6). These limitations are expressed by $\frac{1}{2} f'_{tdx} \leq f_{tdx} \leq 2 f'_{tdx}$ and $\frac{1}{2} f'_{tdy} \leq f_{tdy} \leq 2 f'_{tdy}$.

(5) The reinforcement should be fully anchored at all free edges, e.g. by U-bars or similar.

Licensed copy:University of Wales Trinity Saint David, 12/03/2020, Uncontrolled Copy, © BSI

Annex G (Informative)

Soil structure interaction

G.1 Shallow foundations

G.1.1 General

(1) The interaction between the ground, the foundation and the superstructure should be considered. The contact pressure distribution on the foundations and the column forces are both dependent on the relative settlements.

(2) In general the problem may be solved by ensuring that the displacements and associated reactions of the soil and the structure are compatible.

(3) Although the above general procedure is adequate, many uncertainties still exist, due to the load sequence and creep effects. For this reason different levels of analysis, depending on the degree of idealisation of the mechanical models, are usually defined.

(4) If the superstructure is considered as flexible, then the transmitted loads do not depend on the relative settlements, because the structure has no rigidity. In this case the loads are no longer unknown, and the problem is reduced to the analysis of a foundation on a deforming ground.

(5) If the superstructure is considered as rigid, then the unknown foundation loads can be obtained by the condition that settlements should lie on a plane. It should be checked that this rigidity exists until the ultimate limit state is reached.

(6) A further simplifying scheme arises if the foundation system can be assumed to be rigid or the supporting ground is very stiff. In either case the relative settlements may be ignored and no modification of the loads transmitted from the superstructure is required.

(7) To determine the approximate rigidity of the structural system, an analysis may be made comparing the combined stiffness of the foundation, superstructure framing members and shear walls, with the stiffness of the ground. This relative stiffness K_R will determine whether the foundation or the structural system should be considered rigid or flexible. The following expression may be used for building structures:

$$K_R = (EJ)_S / (El^3) \qquad \text{(G.1)}$$

where:

$(EJ)_S$ is the approximate value of the flexural rigidity per unit width of the building structure under consideration, obtained by summing the flexural rigidity of the foundation, of each framed member and any shear wall

E is the deformation modulus of the ground

l is the length of the foundation

Relative stiffnesses higher than 0,5 indicate rigid structural systems.

Licensed copy:University of Wales Trinity Saint David, 12/03/2020, Uncontrolled Copy, © BSI

G.1.2 Levels of analysis

(1) For design purposes, the following levels of analysis are permitted:

Level 0: In this level, linear distribution of the contact pressure may be assumed.

The following preconditions should be fulfilled:

- the contact pressure does not exceed the design values for both the serviceability and the ultimate limit states;
- at the serviceability limit state, the structural system is not affected by settlements, or the expected differential settlements are not significant;
- at the ultimate limit state, the structural system has sufficient plastic deformation capacity so that differences in settlements do not affect the design.

Level 1: The contact pressure may be determined taking into account the relative stiffness of the foundation and the soil and the resulting deformations evaluated to check that they are within acceptable limits.

The following preconditions should be fulfilled:

- sufficient experience exists to show that the serviceability of the superstructure is not likely to be affected by the soil deformation;
- at the ultimate limit state, the structural system has adequate ductile behaviour.

Level 2: At this level of analysis the influence of ground deformations on the superstructure is considered. The structure is analysed under the imposed deformation of the foundation to determine the adjustments to the loads applied to the foundations. If the resulting adjustments are significant (i.e. > $|10|$ %) then Level 3 analysis should be adopted.

Level 3: This is a complete interactive procedure taking into account the structure, its foundations and the ground.

G.2 Piled foundations

(1) If the pile cap is rigid, a linear variation of the settlements of the individual piles may be assumed which depends on the rotation of the pile cap. If this rotation is zero or may be ignored, equal settlement of all piles may be assumed. From equilibrium equations, the unknown pile loads and the settlement of the group can be calculated.

(2) However, when dealing with a piled raft, interaction occurs not only between individual piles but also between the raft and the piles, and no simple approach to analyse this problem is available.

(3) The response of a pile group to horizontal loads generally involves not only the lateral stiffness of the surrounding soil and of the piles, but also their axial stiffness (e.g. lateral load on a pile group causes tension and compression on edge piles).

Licensed copy:University of Wales Trinity Saint David, 12/03/2020, Uncontrolled Copy, © BSI

Annex H (Informative)

Global second order effects in structures

H.1 Criteria for neglecting global second order effects

H.1.1 General

(1) Clause H.1 gives criteria for structures where the conditions in 5.8.3.3 (1) are not met. The criteria are based on 5.8.2 (6) and take into account global bending and shear deformations, as defined in Figure H.1.

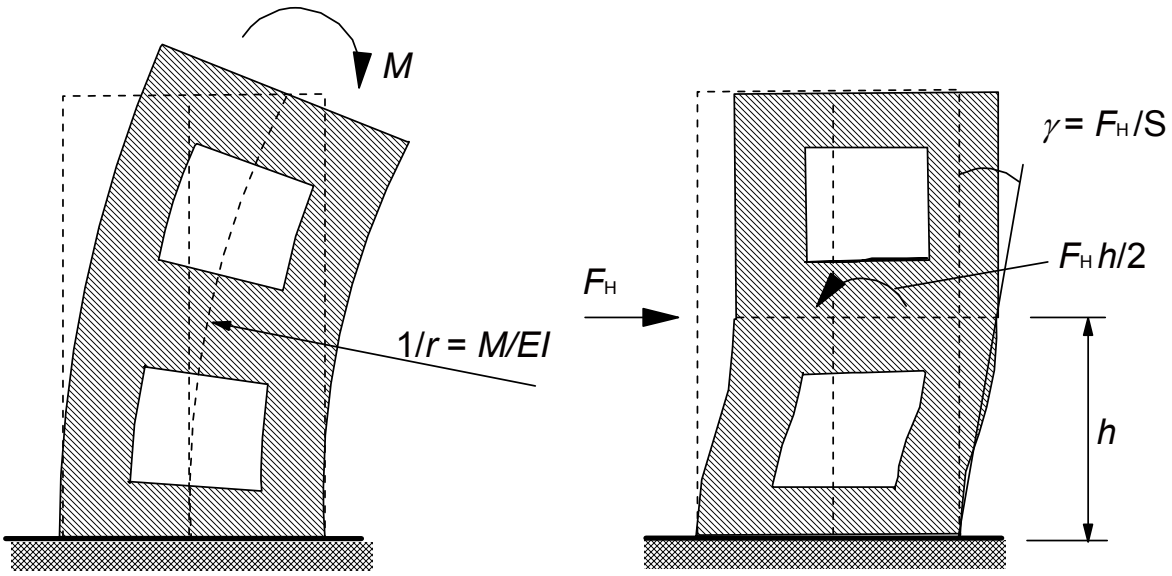

Figure H.1: **Definition of global bending and shear deformations (1/*r* and γ respectively) and the corresponding stiffnesses (*EI* and *S* respectively)**

H.1.2 Bracing system without significant shear deformations

(1) For a bracing system without significant shear deformations (e.g. shear walls without openings), global second order effects may be ignored if:

$$F_{V,Ed} \leq 0,1 \cdot F_{V,BB} \tag{H.1}$$

where:

$F_{V,Ed}$ is the total vertical load (on braced and bracing members)

$F_{V,BB}$ is the nominal global buckling load for global bending, see (2)

(2) The nominal global buckling load for global bending may be taken as

$$F_{V,BB} = \xi \cdot \Sigma EI / L^2 \tag{H.2}$$

where:

ξ is a coefficient depending on number of storeys, variation of stiffness, rigidity of base restraint and load distribution; see (4)

ΣEI is the sum of bending stiffnesses of bracing members in direction considered, including possible effects of cracking; see (3)

L is the total height of building above level of moment restraint.

(3) In the absence of a more accurate evaluation of the stiffness, the following may be used for a bracing member with *cracked* section:

$$EI \approx 0{,}4\, E_{cd} I_c \tag{H.3}$$

where:

E_{cd} = E_{cm}/γ_{cE}, design value of concrete modulus, see 5.8.6 (3)

I_c second moment of area of bracing member

If the cross-section is shown to be *uncracked* in the ultimate limit state, constant 0,4 in Expression (H.3) may be replaced by 0,8.

(4) If bracing members have constant stiffness along the height and the total vertical load increases with the same amount per storey, then ξ may be taken as

$$\xi = 7{,}8 \cdot \frac{n_s}{n_s + 1{,}6} \cdot \frac{1}{1 + 3{,}9k} \tag{H.4}$$

where:

n_s is the number of storeys

k is the relative flexibility of moment restraint; see (5).

(5) The relative flexibility of moment restraint at the base is defined as:

$$k = (\theta/M)\cdot(EI/L) \tag{H.5}$$

where:

θ is the rotation for bending moment M

EI is the stiffness according to (3)

L is the otal height of bracing unit

Note: For k = 0, i.e. rigid restraint, Expressions (H.1)-(H.4) can be combined into Expression (5.18), where the coefficient 0,31 follows from 0,1· 0,4 ·7,8 ≈ 0,31.

.

H.1.3 Bracing system with significant global shear deformations

(1) Global second order effects may be ignored if the following condition is fulfilled:

$$F_{V,Ed} \le 0{,}1 \cdot F_{V,B} = 0{,}1 \cdot \frac{F_{V,BB}}{1 + F_{V,BB} / F_{V,BS}} \tag{H.6}$$

where

$F_{V,B}$ is the global buckling load taking into account global bending *and* shear

$F_{V,BB}$ is the global buckling load for pure bending, see H.1.2 (2)

$F_{V,BS}$ is the global buckling load for pure shear, $F_{V,BS} = \Sigma S$

ΣS is the total shear stiffness (force per shear angle) of bracing units (see Figure H.1)

Licensed copy:University of Wales Trinity Saint David, 12/03/2020, Uncontrolled Copy, © BSI

Note: The global shear deformation of a bracing unit is normally governed mainly by local bending deformations (Figure H.1). Therefore, in the absence of a more refined analysis, cracking may be taken into account for S in the same way as for EI; see H.1.2 (3).

H.2 Methods for calculation of global second order effects

(1) This clause is based on linear second order analysis according to 5.8.7. Global second order effects may then be taken into account by analysing the structure for fictitious, magnified horizontal forces $F_{H,Ed}$:

$$F_{H,Ed} = \frac{F_{H,0Ed}}{1 - F_{V,Ed} / F_{V,B}} \tag{H.7}$$

where:

$F_{H,0Ed}$ is the first order horizontal force due to wind, imperfections etc.
$F_{V,Ed}$ is the total vertical load on bracing *and* braced members
$F_{V,B}$ is the nominal global buckling load, see (2).

(2) The buckling load $F_{V,B}$ may be determined according to H.1.3 (or H.1.2 if global shear deformations are negligible). However, in this case nominal stiffness values according to 5.8.7.2 should be used, including the effect of creep.

(3) In cases where the global buckling load $F_{V,B}$ is not defined, the following expression may be used instead:

$$F_{H,Ed} = \frac{F_{H,0Ed}}{1 - F_{H,1Ed} / F_{H,0Ed}} \tag{H.8}$$

where:

$F_{H,1Ed}$ fictitious horizontal force, giving the same bending moments as vertical load $N_{V,Ed}$ acting on the deformed structure, with deformation caused by $F_{H,0Ed}$ (first order deformation), and calculated with nominal stiffness values according to 5.8.7.2

Note: Expression (H.8) follows from a step-by-step numerical calculation, where the effect of vertical load and deformation increments, expressed as equivalent horizontal forces, are added in consecutive steps. The increments will form a geometric series after a few steps. Assuming that this occurs even at the first step, (which is analogous to assuming β =1 in 5.8.7.3 (3)), the sum can be expressed as in Expression (H.8). This assumption requires that the stiffness values representing the final stage of deformations are used in all steps (note that this is also the basic assumption behind the analysis based on nominal stiffness values).

In other cases, e.g. if uncracked sections are assumed in the first step and cracking is found to occur in later steps, or if the distribution of equivalent horizontal forces changes significantly between the first steps, then more steps have to be included in the analysis, until the assumption of a geometric series is met. Example with two more steps than in Expression (H.8):

$F_{H,Ed} = F_{H,0Ed} + F_{H,1Ed} + F_{H,2Ed} /(1- F_{H,3Ed} / F_{H,2Ed})$

Licensed copy:University of Wales Trinity Saint David, 12/03/2020, Uncontrolled Copy, © BSI

Licensed copy:University of Wales Trinity Saint David, 12/03/2020, Uncontrolled Copy, © BSI

Annex I (Informative)

Analysis of flat slabs and shear walls

I.1 Flat Slabs

I.1.1 General

(1) For the purpose of this section flat slabs may be of uniform thickness or they may incorporate drops (thickenings over columns).

(2) Flat slabs should be analysed using a proven method of analysis, such as grillage (in which the plate is idealised as a set of interconnected discrete members), finite element, yield line or equivalent frame. Appropriate geometric and material properties should be employed.

I.1.2 Equivalent frame analysis

(1) The structure should be divided longitudinally and transversely into frames consisting of columns and sections of slabs contained between the centre lines of adjacent panels (area bounded by four adjacent supports). The stiffness of members may be calculated from their gross cross-sections. For vertical loading the stiffness may be based on the full width of the panels. For horizontal loading 40% of this value should be used to reflect the increased flexibility of the column/slab joints in flat slab structures compared to that of column/beam joints. Total load on the panel should be used for the analysis in each direction.

(2) The total bending moments obtained from analysis should be distributed across the width of the slab. In elastic analysis negative moments tend to concentrate towards the centre lines of the columns.

(3) The panels should be assumed to be divided into column and middle strips (see Figure I.1) and the bending moments should be apportioned as given in Table I.1.

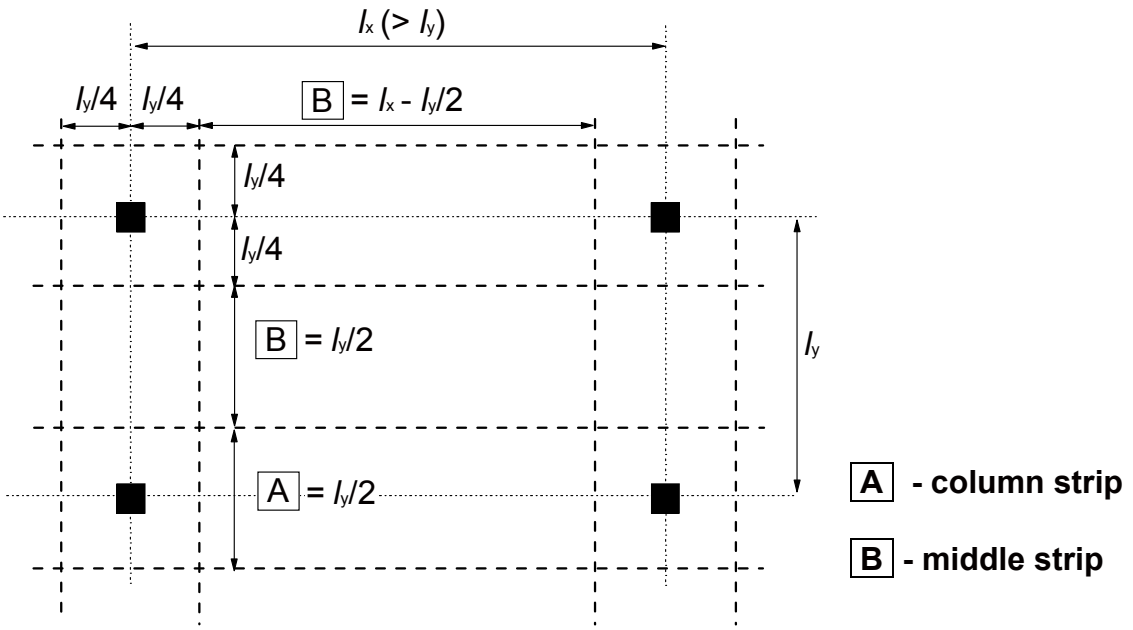

Figure I.1: Division of panels in flat slabs

Licensed copy:University of Wales Trinity Saint David, 12/03/2020, Uncontrolled Copy, © BSI

Note: When drops of width > (l_y/3) are used the column strips may be taken to be the width of drops. The width of middle strips should then be adjusted accordingly.

Table I.1 Simplified apportionment of bending moment for a flat slab

	Negative moments	Positive moments
Column Strip	60 - 80%	50 - 70%
Middle Strip	40 - 20%	50 - 30%
Note: Total negative and positive moments to be resisted by the column and middle strips together should always add up to 100%.		

(4) Where the width of the column strip is different from 0,5l_x as shown in Figure I.1 (e.g.) and made equal to width of drop the width of middle strip should be adjusted accordingly.

(5) Unless there are perimeter beams, which are adequately designed for torsion, moments transferred to edge or corner columns should be limited to the moment of resistance of a rectangular section equal to 0,17 $b_e d^2 f_{ck}$ (see Figure 9.9 for the definition of b_e). The positive moment in the end span should be adjusted accordingly.

I.1.3 Irregular column layout

(1) Where, due to the irregular layout of columns, a flat slab can not be sensibly analysed using the equivalent frame method, a grillage or other elastic method may be used. In such a case the following simplified approach will normally be sufficient:

i) analyse the slab with the full load, $\gamma_Q Q_k + \gamma_G G_k$, on all bays
ii) the midspan and column moments should then be increased to allow for the effects of pattern loads. This may be achieved by loading a critical bay (or bays) with $\gamma_Q Q_k + \gamma_G G_k$ and the rest of the slab with $\gamma_G G_k$. Where there may be significant variation in the permanent load between bays, γ_G should be taken as 1 for the unloaded bays.
iii) the effects of this particular loading may then be applied to other critical bays and supports in a similar way.

(2) The restrictions with regard to the transfer of moments to edge of columns given in ⟦AC1⟩ I.1.2 (5) ⟨AC1⟧ should be applied.

I.2 Shear Walls

(1) Shear walls are plain or reinforced concrete walls which contribute to the lateral stability of the structure.

(2) Lateral load resisted by each shear wall in a structure should be obtained from a global analysis of the structure, taking into account the applied loads, the eccentricities of the loads with respect to the shear centre of the structure and the interaction between the different structural walls.

(3) The effects of asymmetry of wind loading should be considered (see EN 1991-1-4).

(4) The combined effects of axial loading and shear should be taken into account.

(5) In addition to other serviceability criteria in this code, the effect of sway of shear walls on the occupants of the structure should also be considered, (see EN 1990).

(6) In the case of building structures not exceeding 25 storeys, where the plan layout of the walls is reasonably symmetrical, and the walls do not have openings causing significant global shear deformations, the lateral load resisted by a shear wall may be obtained as follows:

$$P_n = \frac{P(EI)_n}{\Sigma(EI)} \pm \frac{(Pe)y_n(EI)_n}{\Sigma(EI)y_n^2} \qquad \text{(I.1)}$$

where:

P_n is the lateral load on wall n

$(EI)_n$ is the stiffness of wall n

P is the applied load

e is the eccentricity of P with respect to the centroid of the stiffnesses (see Figure I.3)

y_n is the distance of wall n from the centroid of stiffnesses.

(7) If members with and without significant shear deformations are combined in the bracing system, the analysis should take into account both shear and flexural deformation.

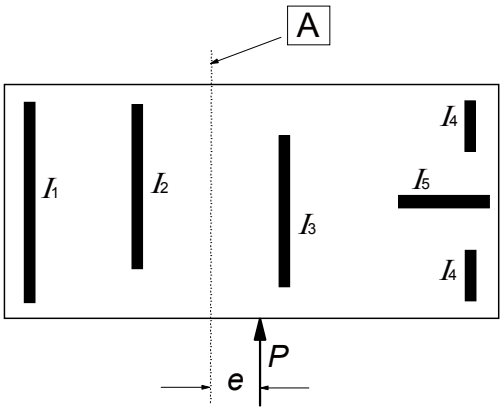

A - Centroid of shear wall group

Figure I.3: Eccentricity of load from centroid of shear walls

Licensed copy:University of Wales Trinity Saint David, 12/03/2020, Uncontrolled Copy, © BSI

Licensed copy:University of Wales Trinity Saint David, 12/03/2020, Uncontrolled Copy, © BSI

Annex J (Informative)

Detailing rules for particular situations

J.1 Surface reinforcement

(1) Surface reinforcement to resist spalling should be used where the main reinforcement is made up of:

- bars with diameter greater than 32 mm or
- bundled bars with equivalent diameter greater than 32 mm (see 8.8)

The surface reinforcement should consist of wire mesh or small diameter bars, and be placed outside the links as indicated in Figure J.1.

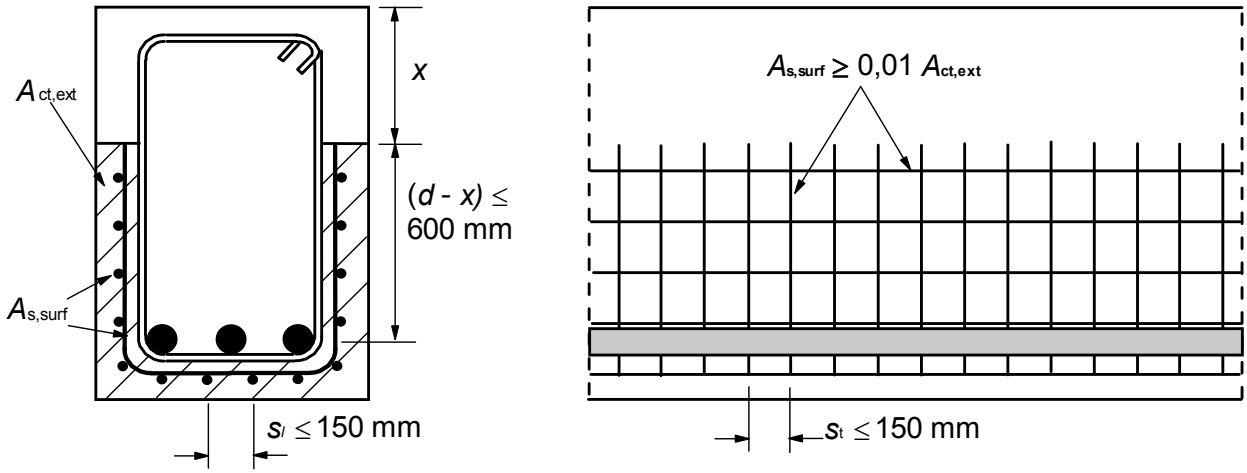

x is the depth of the neutral axis at ULS

Figure J.1: Example of surface reinforcement

(2) The area of surface reinforcement $A_{s,surf}$ should be not less than $A_{s,surfmin}$ in the two directions parallel and orthogonal to the tension reinforcement in the beam,

Note: The value of $A_{s,surfmin}$ for use in a Country may be found in its National Annex. The recommended value is 0,01 $A_{ct,ext}$, where $A_{ct,ext}$ is the area of the tensile concrete external to the links (see Figure ⟦AC1⟩J.1⟨AC1⟧).

(3) Where the cover to reinforcement is greater than 70 mm, for enhanced durability similar surface reinforcement should be used, with an area of 0,005 $A_{ct,ext}$ in each direction.

(4) The minimum cover needed for the surface reinforcement is given in 4.4.1.2.

(5) The longitudinal bars of the surface reinforcement may be taken into account as longitudinal bending reinforcement and the transverse bars as shear reinforcement provided that they meet the requirements for the arrangement and anchorage of these types of reinforcement.

Licensed copy:University of Wales Trinity Saint David, 12/03/2020, Uncontrolled Copy, © BSI

J.2 Frame corners

J.2.1 General

(1) The concrete strength $\sigma_{Rd,max}$ should be determined with respect to 6.5.2 (compression zones with or without transverse reinforcement).

J.2.2 Frame corners with closing moments

(1) For approximately equal depths of column and beam ($2/3 < h_2/h_1 < 3/2$) (see Figure J.2 (a)) no check of link reinforcement or anchorage lengths within the beam column joint is required, provided that all the tension reinforcement of the beam is bent around the corner.

(2) Figure J.2 (b) shows a strut and tie model for $h_2/h_1 < 2/3$ for a limited range of $\tan\theta$.

Note: The values of the limits of $\tan\theta$ for use in a Country may be found in its National Annex. The recommended value of the lower limit is 0,4 and the recommended value of the upper limit is 1.

(3) The anchorage length l_{bd} should be determined for the force $\Delta F_{td} = F_{td2} - F_{td1}$.

(4) Reinforcement should be provided for transverse tensile forces perpendicular to an in-plane node.

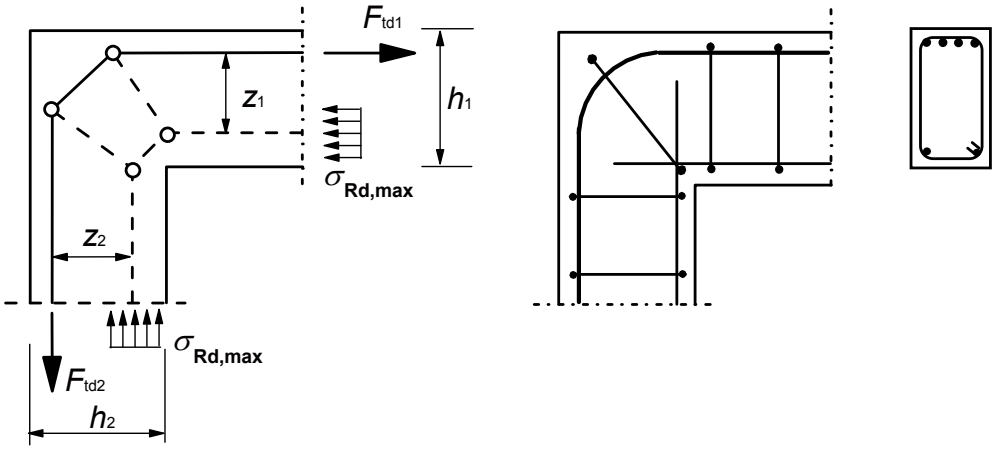

(a) almost equal depth of beam and column

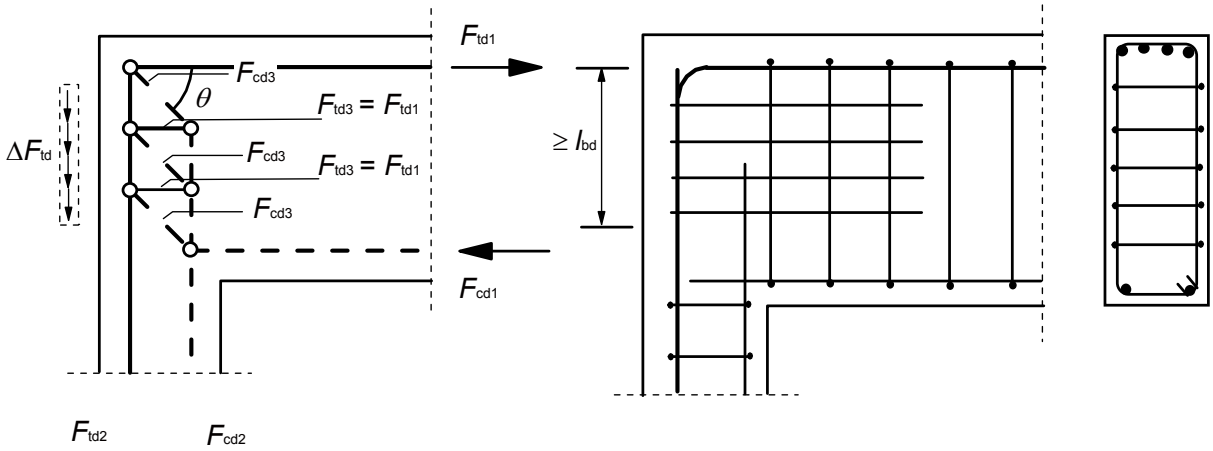

(b) very different depth of beam and column

Figure J.2: Frame Corner with closing moment. Model and reinforcement

J.2.3 Frame corners with opening moments

(1) For approximately equal depths of column and beam the strut and tie models given in Figures J.3 (a) and J.4 (a) may be used. Reinforcement should be provided as a loop in the corner region or as two overlapping U bars in combination with inclined links as shown in Figures J.3 (b) and (c) and Figures J.4 (b) and (c).

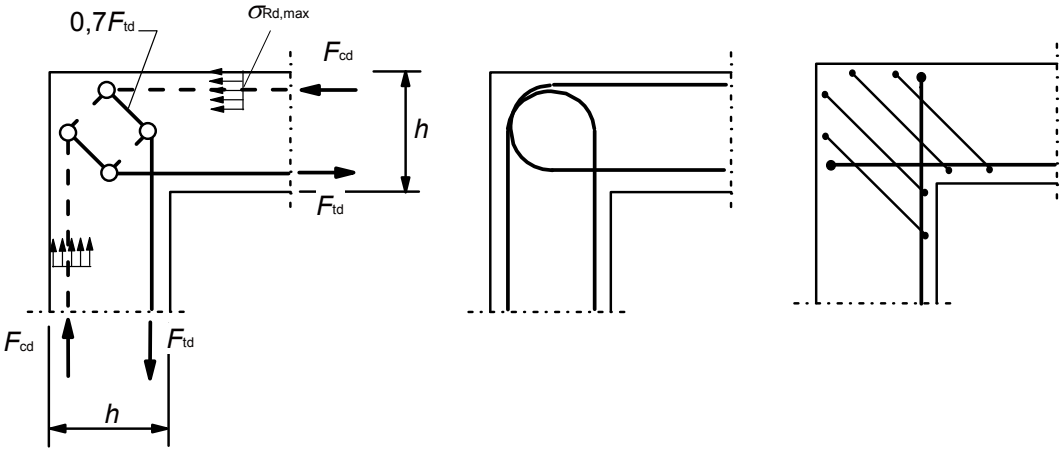

a) strut and tie model **(b) and (c) detailing of reinforcement**

Figure J.3: Frame corner with moderate opening moment (e.g. $A_S/bh \leq 2\%$)

(2) For large opening moments a diagonal bar and links to prevent splitting should be considered as shown in Figure J.4.

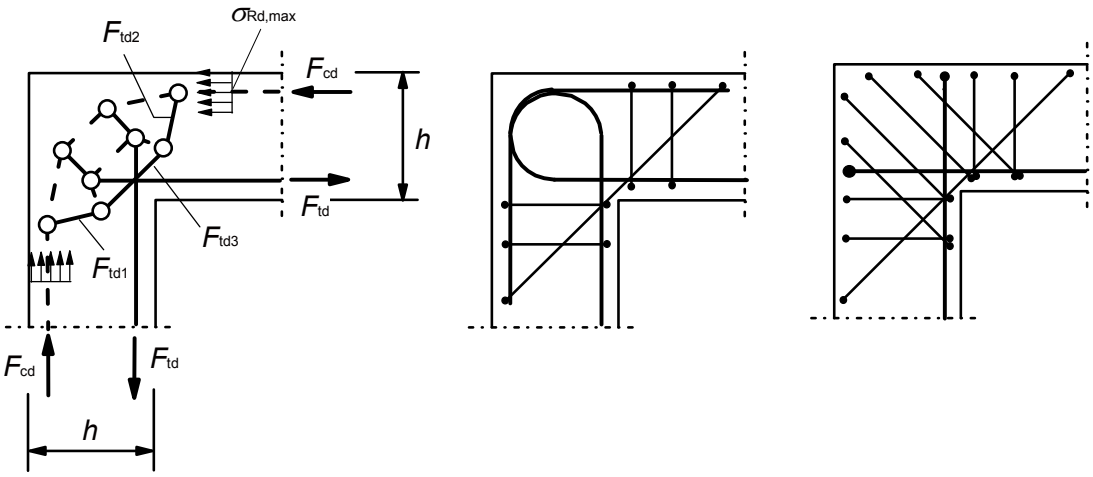

a) strut-and-tie model **(b) and (c) detailing of reinforcement**

Figure J.4: Frame corner with large opening moment (e.g. $A_S/bh > 2\%$)

Licensed copy:University of Wales Trinity Saint David, 12/03/2020, Uncontrolled Copy, © BSI

Licensed copy:University of Wales Trinity Saint David, 12/03/2020, Uncontrolled Copy, © BSI

J.3 Corbels

(1) Corbels ($a_c < z_0$) may be designed using strut-and-tie models as described in 6.5 (see Figure J.5). The inclination of the strut is limited by $1{,}0 \leq \tan\theta \leq 2{,}5$.

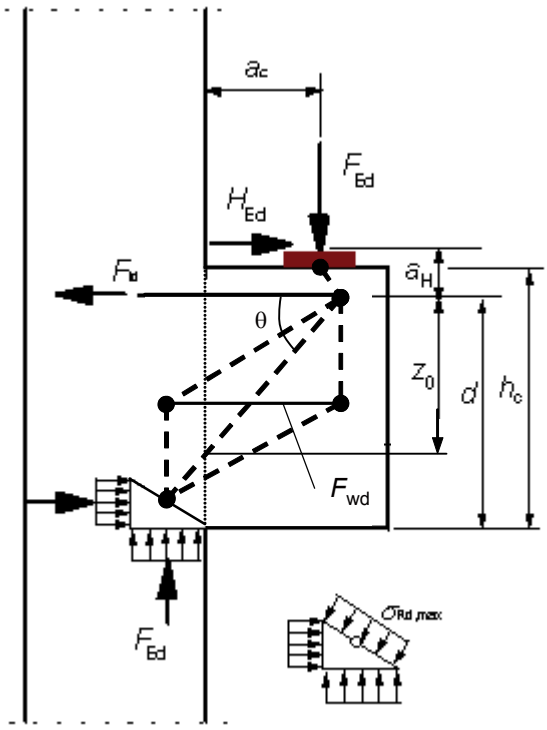

Figure J.5: Corbel strut-and-tie model

(2) If $a_c < 0{,}5\ h_c$ closed horizontal or inclined links with $A_{s,lnk} \geq k_1\ A_{s,main}$ should be provided in addition to the main tension reinforcement (see Figure J.6 (a)).

Note: The value of k_1 for use in a Country may be found in its National Annex. The recommended value is 0,25.

(3) If $a_c > 0{,}5\ h_c$ and $F_{Ed} > V_{Rd,c}$ (see 6.2.2), closed vertical links $A_{s,lnk} \geq k_2\ F_{Ed}/f_{yd}$ should be provided in addition to the main tension reinforcement (see Figure J.6 (b)).

Note: The value of k_2 for use in a Country may be found in its National Annex. The recommended value is 0,5.

(4) The main tension reinforcement should be anchored at both ends. It should be anchored in the supporting element on the far face and the anchorage length should be measured from the location of the vertical reinforcement in the near face. The reinforcement should be anchored in the corbel and the anchorage length should be measured from the inner face of the loading plate.

(5) If there are special requirements for crack limitation, inclined stirrups at the re-entrant opening will be effective.

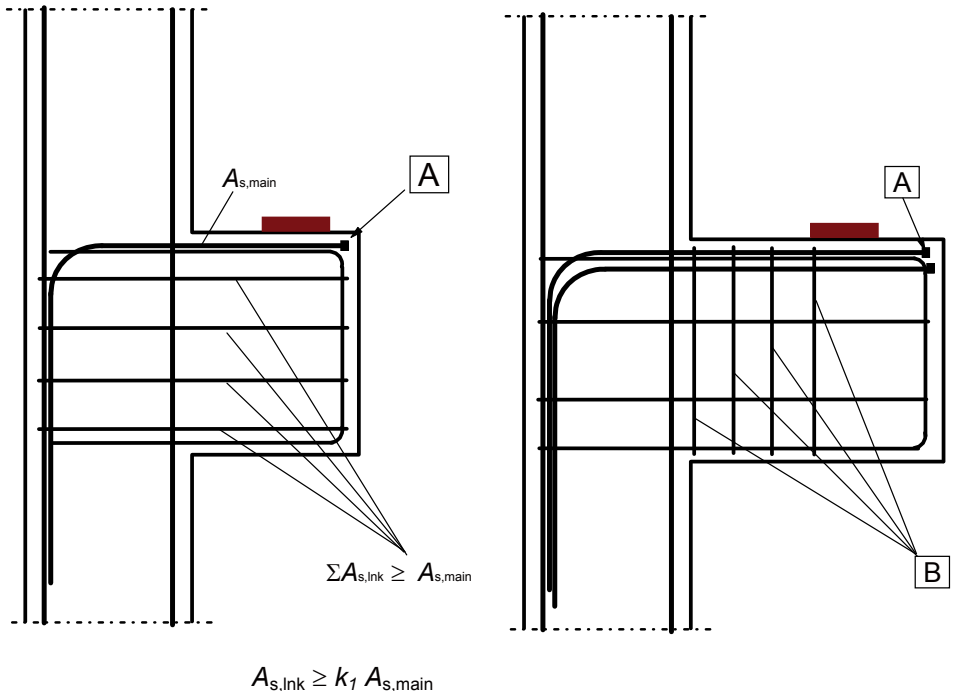

A - anchorage devices or loops B - Links

(a) reinforcement for $a_c \leq 0{,}5\ h_c$ (b) reinforcement for $a_c > 0{,}5\ h_c$

Figure J.6: Corbel detailing

Licensed copy:University of Wales Trinity Saint David, 12/03/2020, Uncontrolled Copy, © BSI

Licensed copy:University of Wales Trinity Saint David, 12/03/2020, Uncontrolled Copy, © BSI

blank

NO COPYING WITHOUT BSI PERMISSION EXCEPT AS PERMITTED BY COPYRIGHT LAW

British Standards Institution (BSI)

BSI is the national body responsible for preparing British Standards and other standards-related publications, information and services.

BSI is incorporated by Royal Charter. British Standards and other standardization products are published by BSI Standards Limited.

About us

We bring together business, industry, government, consumers, innovators and others to shape their combined experience and expertise into standards -based solutions.

The knowledge embodied in our standards has been carefully assembled in a dependable format and refined through our open consultation process. Organizations of all sizes and across all sectors choose standards to help them achieve their goals.

Information on standards

We can provide you with the knowledge that your organization needs to succeed. Find out more about British Standards by visiting our website at bsigroup.com/standards or contacting our Customer Services team or Knowledge Centre.

Buying standards

You can buy and download PDF versions of BSI publications, including British and adopted European and international standards, through our website at bsigroup.com/shop, where hard copies can also be purchased.

If you need international and foreign standards from other Standards Development Organizations, hard copies can be ordered from our Customer Services team.

Subscriptions

Our range of subscription services are designed to make using standards easier for you. For further information on our subscription products go to bsigroup.com/subscriptions.

With **British Standards Online (BSOL)** you'll have instant access to over 55,000 British and adopted European and international standards from your desktop. It's available 24/7 and is refreshed daily so you'll always be up to date.

You can keep in touch with standards developments and receive substantial discounts on the purchase price of standards, both in single copy and subscription format, by becoming a **BSI Subscribing Member**.

PLUS is an updating service exclusive to BSI Subscribing Members. You will automatically receive the latest hard copy of your standards when they're revised or replaced.

To find out more about becoming a BSI Subscribing Member and the benefits of membership, please visit bsigroup.com/shop.

With a **Multi-User Network Licence (MUNL)** you are able to host standards publications on your intranet. Licences can cover as few or as many users as you wish. With updates supplied as soon as they're available, you can be sure your documentation is current. For further information, email bsmusales@bsigroup.com.

Revisions

Our British Standards and other publications are updated by amendment or revision.

We continually improve the quality of our products and services to benefit your business. If you find an inaccuracy or ambiguity within a British Standard or other BSI publication please inform the Knowledge Centre.

Copyright

All the data, software and documentation set out in all British Standards and other BSI publications are the property of and copyrighted by BSI, or some person or entity that owns copyright in the information used (such as the international standardization bodies) and has formally licensed such information to BSI for commercial publication and use. Except as permitted under the Copyright, Designs and Patents Act 1988 no extract may be reproduced, stored in a retrieval system or transmitted in any form or by any means – electronic, photocopying, recording or otherwise – without prior written permission from BSI. Details and advice can be obtained from the Copyright & Licensing Department.

Useful Contacts:

Customer Services
Tel: +44 845 086 9001
Email (orders): orders@bsigroup.com
Email (enquiries): cservices@bsigroup.com

Subscriptions
Tel: +44 845 086 9001
Email: subscriptions@bsigroup.com

Knowledge Centre
Tel: +44 20 8996 7004
Email: knowledgecentre@bsigroup.com

Copyright & Licensing
Tel: +44 20 8996 7070
Email: copyright@bsigroup.com

BSI Group Headquarters

389 Chiswick High Road London W4 4AL UK

bsi.

...making excellence a habit.™

Licensed copy:University of Wales Trinity Saint David, 12/03/2020, Uncontrolled Copy, © BSI