Harvesting Sustainable Energy – Design and Implementation of a Hydro Turbine Battery Charging Circuit

Prifysgol Cymru
Y Drindod Dewi Sant
University of Wales
Trinity Saint David

By: Adam Cross (2106959) - BEng Electrical and Electronic Engineering
Email: 2106959@student.uwtsd.ac.uk

School of Applied Computing

1. Introduction

This project designs and implements a micro-hydro turbine circuit to convert water flow into electrical energy. The power generated is stored in 18650 Lithium-ion batteries to power small devices like LED lights. A microcontroller programmed in C enables user control and battery capacity indication.

2. Aim & Objectives

Aim:

To explore and design an independent micro-hydro turbine circuit capable of converting water flow into electrical energy. This harnessed energy will be stored and used to power small electrical devices, such as LED lights.

Objectives:

- Design and develop standalone circuit with USB compatible output of 4.75V-5.25V
- Maximum dimensions below 30 cm x 30 cm x 30 cm
- Achieve a total project cost of less than £100
- Design compliant with standards IEC 61010-1:2010, RoHS Directive (lead-free solder), USB Battery Charging Spec Rev 1.2 (dedicated charging port), and WEEE guidelines.
- Ensure the product interfaces with BSP ½" or ¾" household pipework
- Microcontroller providing communication between hardware and software

3. Research Overview

Comprehensive research was conducted on various aspects of the project to assist in the design process.

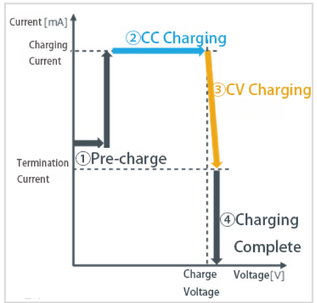

Figure 1: CC/CV Charging [1]

Dedicated charging modules were researched as they are required to safely charge Li-ion batteries.

These modules use the constant current-constant voltage charging technique (CC/CV).

Figure 2: Micro-Hydro Turbine [2]

Research was completed on the working principles, design, and applications of hydro turbines.

Switch-mode power supplies were researched, particularly buck and boost converters.

To regulate circuit input and battery voltage.

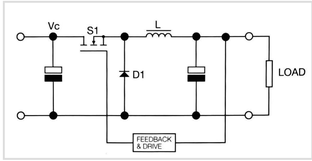

Figure 3: Buck Converter Circuit [3]

4. Design

The final prototype contains the microcontroller circuity mounted on a breadboard and all power components soldered to a copper stripboard for enhanced current capacity. A PIC16F877A performs two functions via C programming software, battery capacity indication via 5 LED lights and USB-A output port control via a sliding toggle switch.

The circuit underwent testing via Proteus simulation to verify its functionality before implementation.

Two 2600mAh 18650 Li-ion batteries connected in parallel provide a total capacity of 5200mAh at 3.7V nominal voltage.

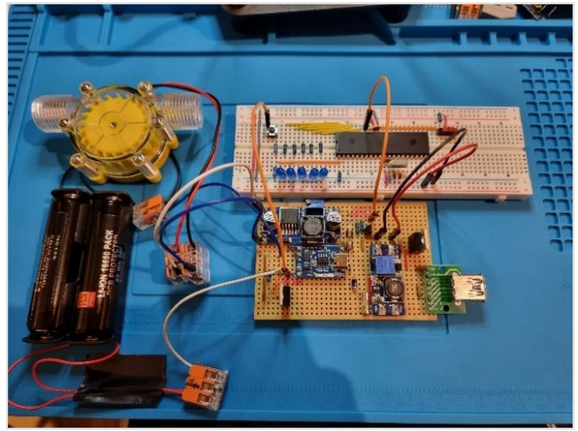

Figure 4: Final Prototype Implementation

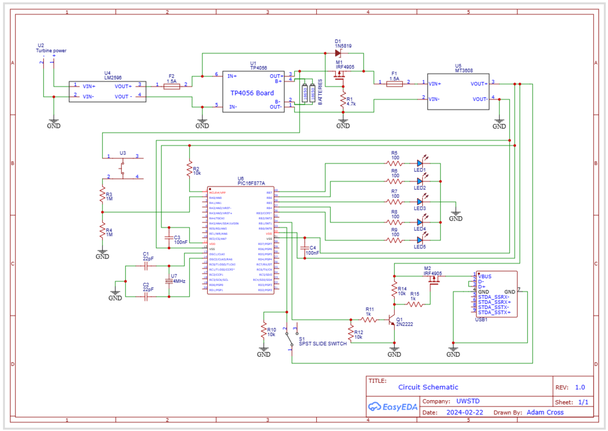

Figure 5: Circuit Design

5. Testing

Extensive testing was completed to validate system functionality, including:

- Software testing via Proteus simulation
- Hardware testing of voltage regulation and battery charging
- Circuit efficiency: 66% during charging
- USB-A port power output: 5.08V, 633mA

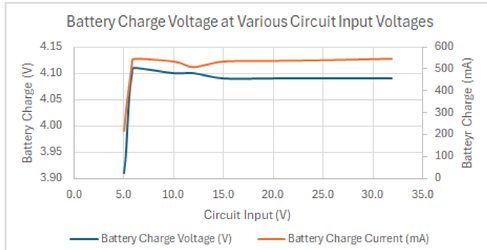

Figure 6: Battery Charging Test Results

6. Conclusion

All objectives and evaluation criteria have been successfully achieved, fulfilling the project's aim. However, certain exceptions occurred due to the turbine not meeting the manufacturer's specifications.

This conclusion is supported by the results of extensive testing and the working prototype.

Opportunities for improvement include, exploring alternative higher-quality turbines, transitioning to a printed circuit board, and integrating a dedicated charging controller to support additional charging schemas.

7. References

[1] "Charging Method | Charge Control ICs | Electronics Basics | ROHM." Accessed: Dec. 30, 2023. [Online]. Available: https://www.rohm.com/electronics-basics/battery-charge/charging-method

[2] "Micro Hydro Generator, F50 0-80V." Accessed: Dec. 29, 2023. [Online]. Available: https://www.amazon.co.uk/dp/B09958LLP4?ref=ppx_yo2ov_dt_b_product_details&th=1

[3] Gary Bocock, *The Essential Guide to Power Supplies*, Issue 1. XP Power, 2014.