Introduction to EV Powertrain Function and Performance - from a Battery Perspective

Neil Johnson

Associate Chief Engineer
Hybrid & Electric Vehicles

ARPA-E Range Kickoff Meeting

29 January 2014

© Ricardo plc 2014

Outline

- **Introduction**
- EV Powertrain Architecture – Component Overview
- Vehicle Energy and Power Demands
- Getting Energy Into the Battery
- Range Specific Comments

© Ricardo plc 2014

Our Business

2300 outstanding staff with an emphasis on transportation engineering plus related new energy and environmental sectors.

- Established in 1915 and independent
- £197.4 million revenue (FY 11/12)
- Additional £39.1 million revenue from AEA Europe (FY 11/12) acquired on 8th November 2012
- More than 2300 employees with over 2000 technical, scientific and engineering staff
- Global presence in 21 locations

Ricardo UK
Shoreham Technical Centre

Ricardo UK
Midlands Technical Centre

Ricardo UK
Cambridge Technical Centre

Ricardo - AEA
Glengarnock

Ricardo – AEA
Harwell

Ricardo - AEA
London

Ricardo – AEA
Cardiff

Ricardo US
Detroit Technical Centre

Ricardo US
Chicago Technical Centre

Ricardo Germany
Schwäbisch Gmünd

Ricardo Czech Republic
Prague

Ricardo in Italy
Turin

Ricardo China
Shanghai

Ricardo India
Delhi

Ricardo Japan
Yokohama

Ricardo in Korea
Seoul

Ricardo in Malaysia
Kuala Lumpur

Ricardo in Russia
Moscow

© Ricardo plc 2014

Outline

- Introduction
- **EV Powertrain Architecture – Component Overview**
- Vehicle Energy and Power Demands
- Getting Energy Into the Battery
- Range Specific Comments

© Ricardo plc 2014

A quick reminder of why:
6+ billion people globally; all want increased mobility.

Decrease Local Pollution

- Globally
  - 100+ urban areas with 3+ million people-9 US Seattle = 3.0 million
  - 20+ mega-cities with over 10 million people
- US
  - >100 million people live in counties with air quality below health based standard[1]

Limit Global CO_2

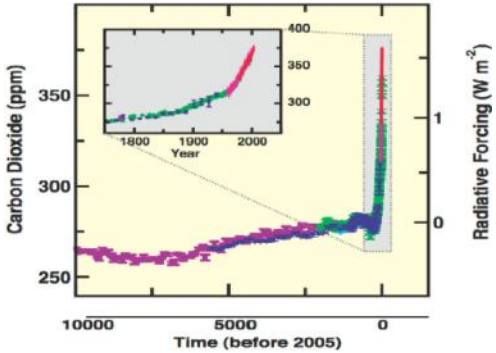

- Globally
  - Increasing pressure to reduce CO_2 levels via Kyoto or other means
- US
  - US EPA and NHTSA issued CO_2 legislation in May 2010 for model year 2012-2016 LD vehicles

Increase Energy Security

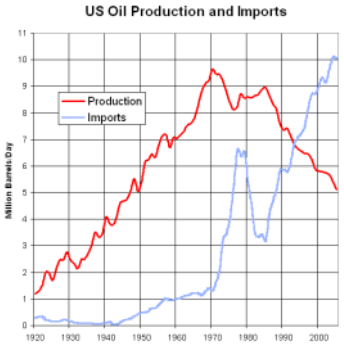

- Globally
  - China vehicle fleet to grow by the an amount equal to total US LD fleet[2] by 2030; yet domestic oil production is only ½ of US[3]
- US
  - US oil production peaked in 1970's
  - 2008 VMT ~3x 1970

Electric Vehicles Remove Transportation from The Above Debates

[1]Our Nation's Air - Status and Trends through 2008, US EPA
[2]Vehicle ownership and Income Growth Worldwide, Energy Journal, 2007, Vol. 28, No. 4
[3]CIA World Factbook

© Ricardo plc 2014

Transportation Highly Dependent on Petroleum Utilizing Electricity Diversifies the Energy Supply

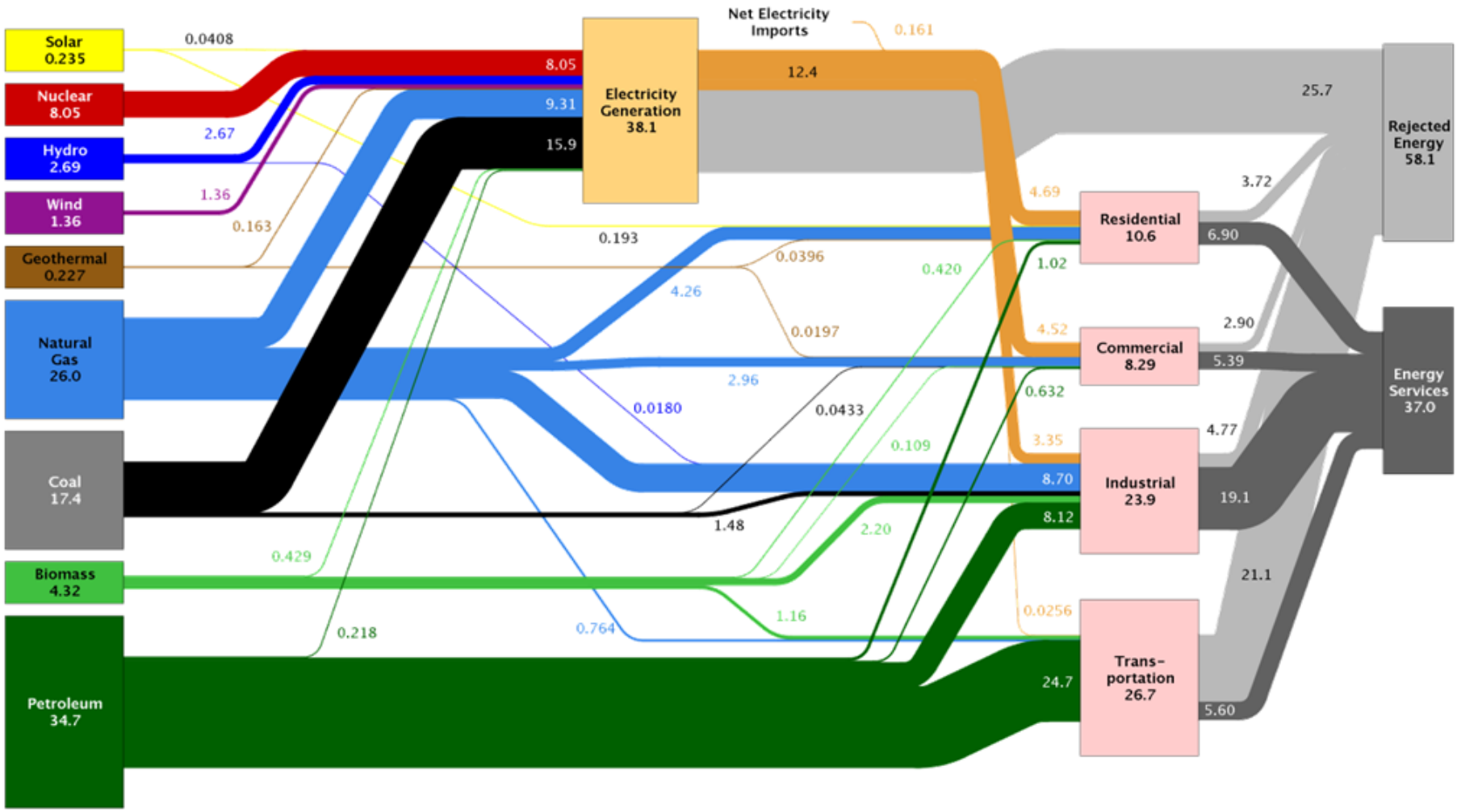

Source: LLNL 2013. Data is based on DOE/EIA-0035(2013-05), May, 2013. If this information or a reproduction of it is used, credit must be given to the Lawrence Livermore National Laboratory and the Department of Energy, under whose auspices the work was performed. Distributed electricity represents only retail electricity sales and does not include self-generation. EIA reports consumption of renewable resources (i.e., hydro, wind, geothermal and solar) for electricity in BTU-equivalent values by assuming a typical fossil fuel plant "heat rate." The efficiency of electricity production is calculated as the total retail electricity delivered divided by the primary energy input into electricity generation. End use efficiency is estimated as 65% for the residential and commercial sectors 80% for the industrial sector, and 21% for the transportation sector. Totals may not equal sum of components due to independent rounding. LLNL-MI-410527

All world regions and vehicle applications are embracing or investigating electrification – using a variety of architectures

Passenger Vehicles	Toyota Prius (Japan)	Chevy Volt (U.S.)	Think EV (Norway)	Joule EV (S. Africa)
Sport Vehicles	Tesla Roadster (U.S.)	Ferrari 599 (Italy)	Porsche 918 (Germany)	McLaren F1 (U.K.)
Commercial Vehicles	EfficientC (U.K.)	Eletra Bus (Brazil)	Smith EV (U.K.)	Odyne (U.S.)
Off-Highway & Military	Caterpillar (U.S.)	John Deere (U.S.)	Ricardo FTTS (U.S.)	Oshkosh HEMTT (U.S.)

But only some are commercially viable today

 © Ricardo plc 2014

High Voltage Component Overview

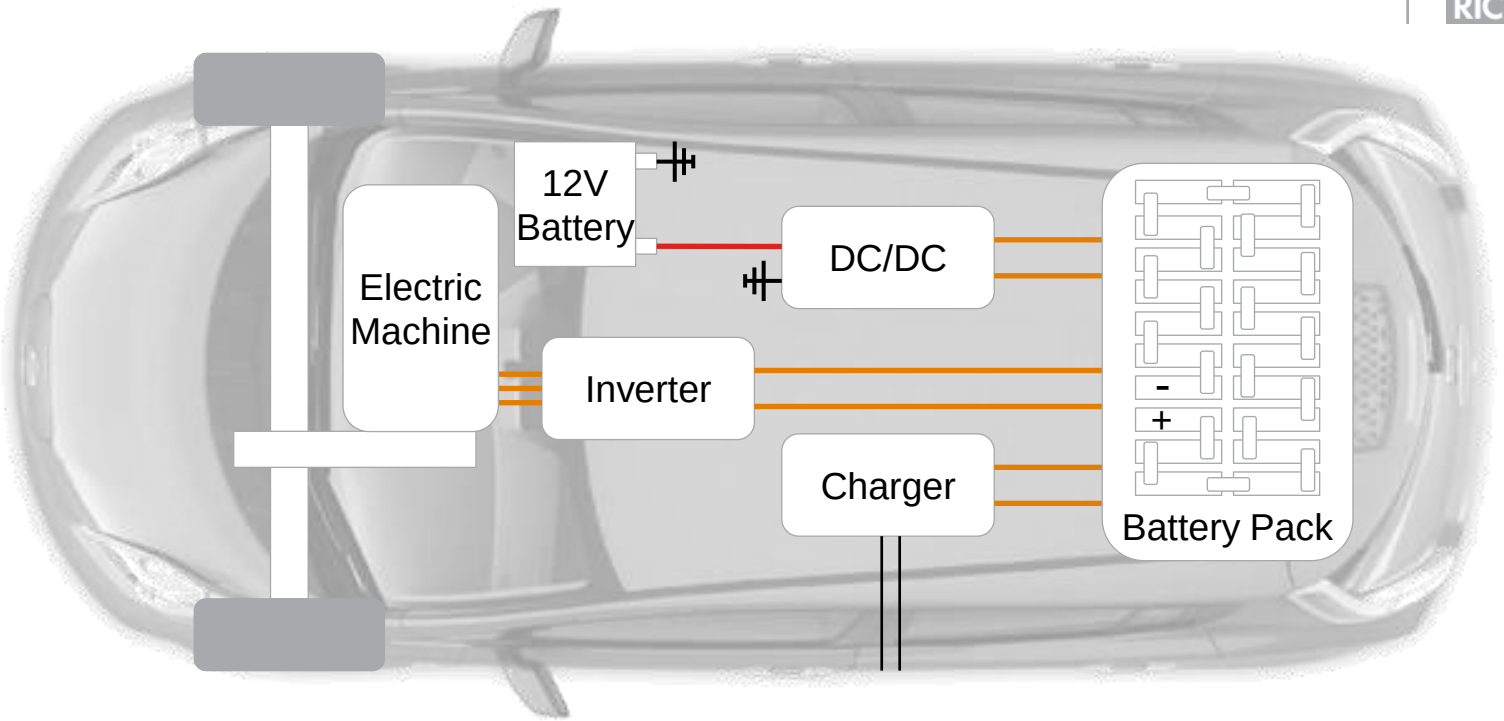

- In most EV's, there are 5 significant components that replace the powertrain of a traditional vehicle:
  - Electric machine
  - Battery Pack
  - Inverter
  - Charger
  - DC/DC Converter

 © Ricardo plc 2014

Component Overview – Electric Machine

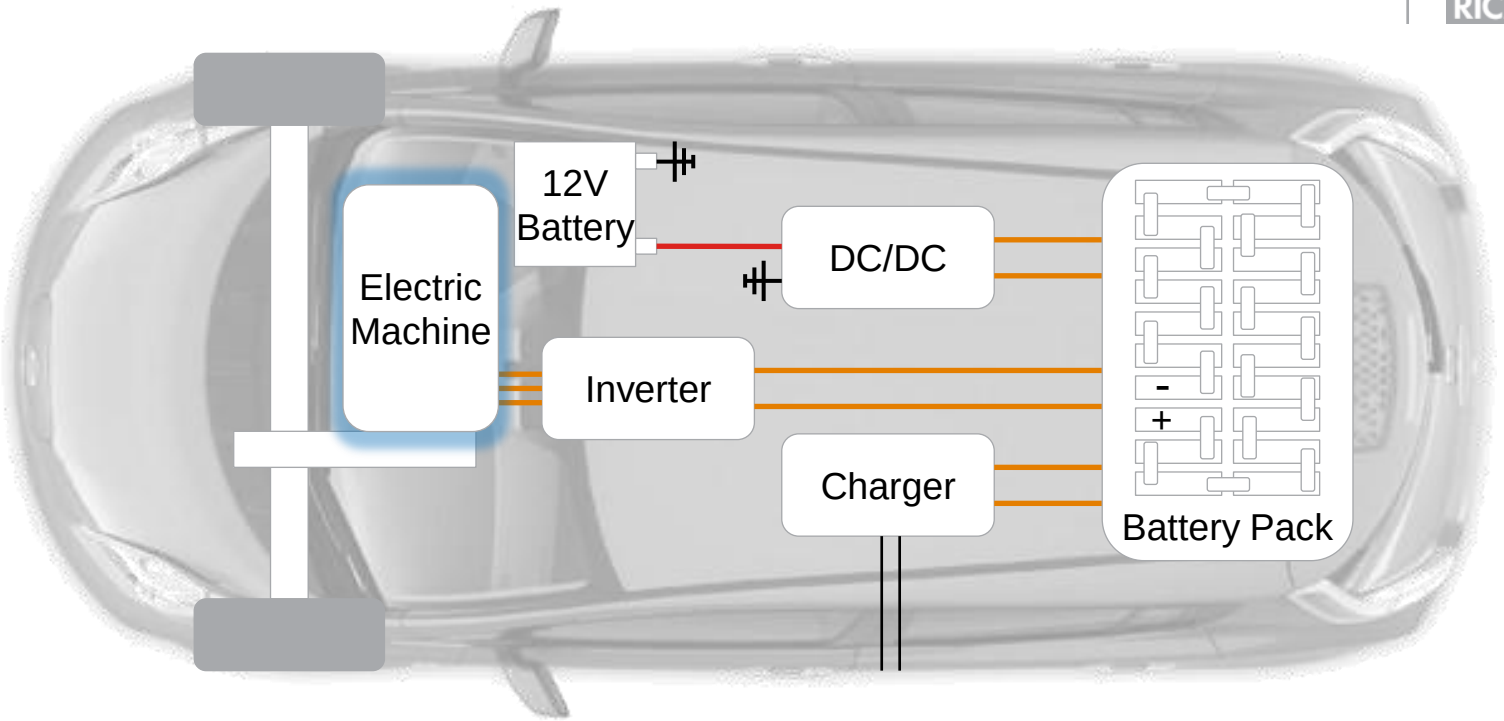

- The electric machine converts electricity to torque to move the vehicle.
- There are <u>many</u> different designs – but in very simple terms, they all utilize opposing electro-magnetic fields to create torque.
- At least one field is created by current through “wire” in the ‘stator’. The second field can be created by permanent magnets or a second “wire” pathway in the rotor.
- The torque is controlled by varying the current flow.

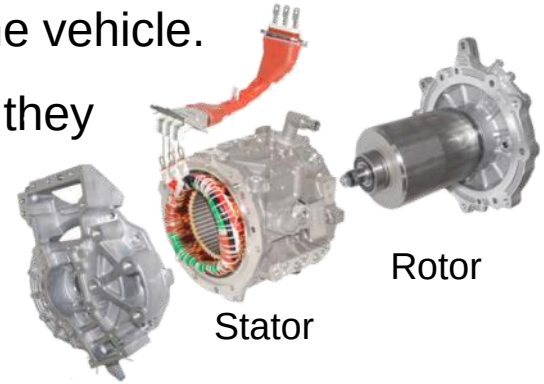

Permanent magnet electric motor from Nissan Leaf

Images courtesy of A2Mac1 & Ricardo ‘s EV /Hybrid Analysis. EVanalysis@ricardo.com

© Ricardo plc 2014

Component Overview – Electric Machine

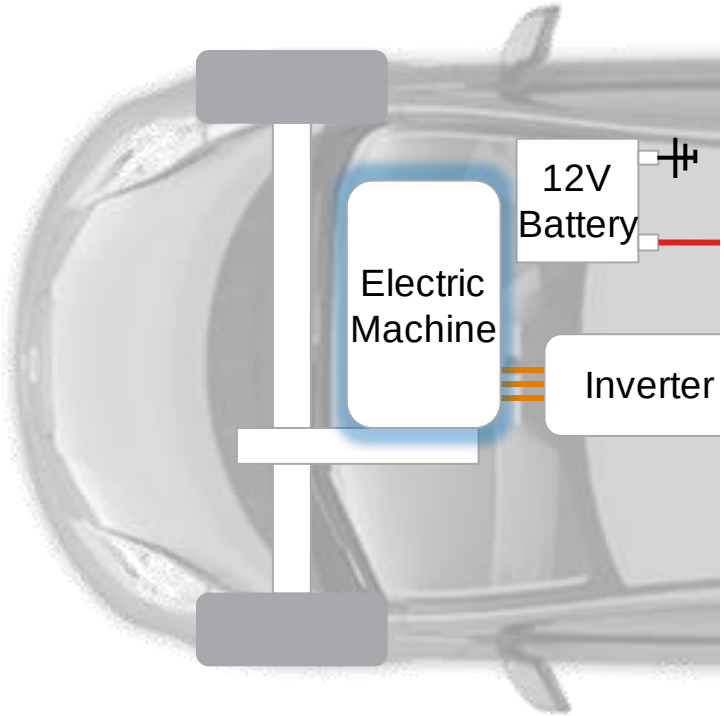

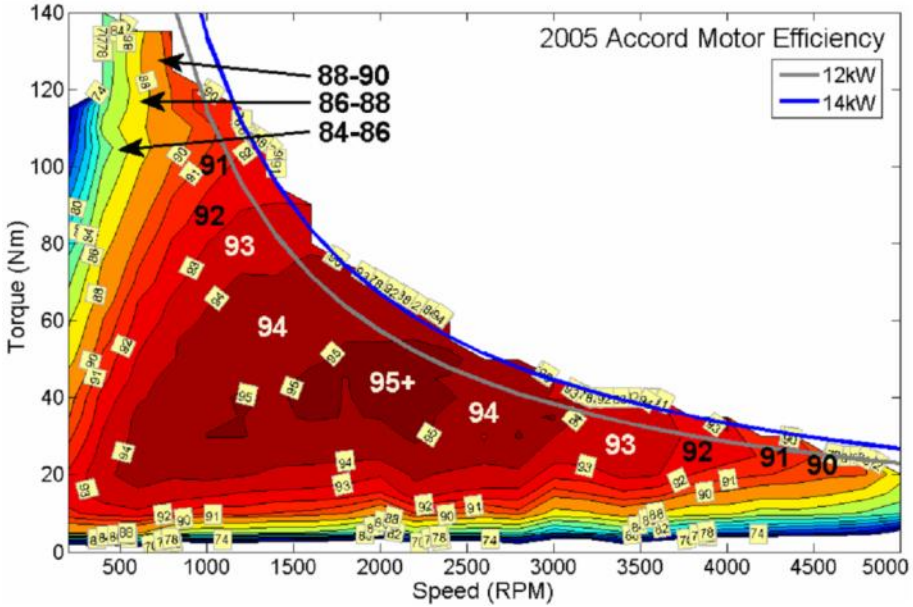

- Electric motor efficiencies are often well above 90% and are thus significantly more efficient than engines whose peak efficiency is down near 40%.
  - Of course that means no free heat for our cars in the winter.
- Electric motors also provide torque at 0 speed – which allows one to design a vehicle with a single gear ratio between the electric motor and the tire rather than a multi-speed transmission.

Source: "Evaluation of 2005 Honda Accord Hybrid Electric Drive System", Oak Ridge National Lab, 2006

 © Ricardo plc 2014

Component Overview – Battery Pack

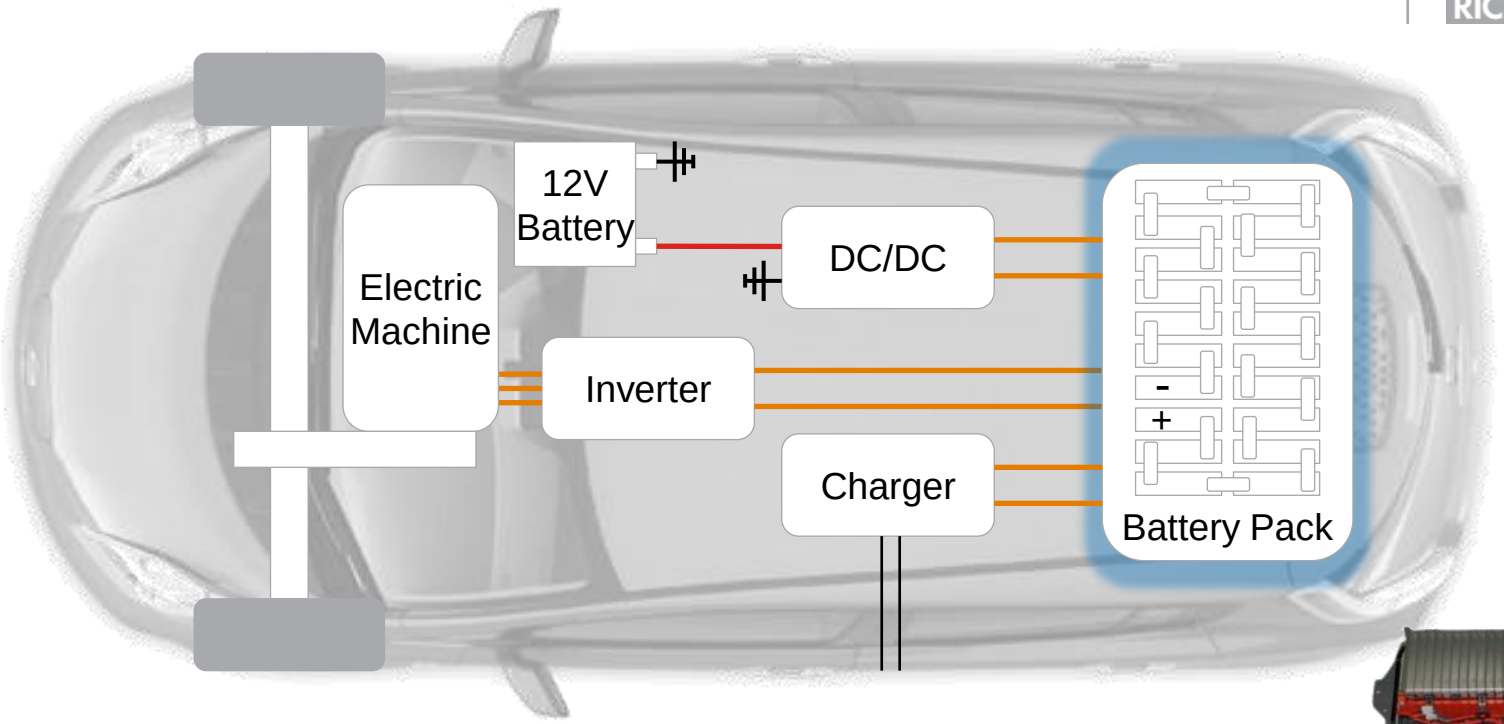

- The battery pack is the device for storing the energy that moves the vehicle.
- It must both accept and provide current to the electric machine as requested by the driver.
- <u>The battery pack in an EV is a slave to driver demands</u>.
  - Hybrid vehicles can use their engine to adjust battery use when conditions warrant.

Nissan Leaf
Battery Pack

Mitsubishi iMiEV
Battery Pack

Images courtesy of A2Mac1 & Ricardo 's EV /Hybrid Analysis. EVanalysis@ricardo.com

© Ricardo plc 2014

Component Overview – Motor Inverter

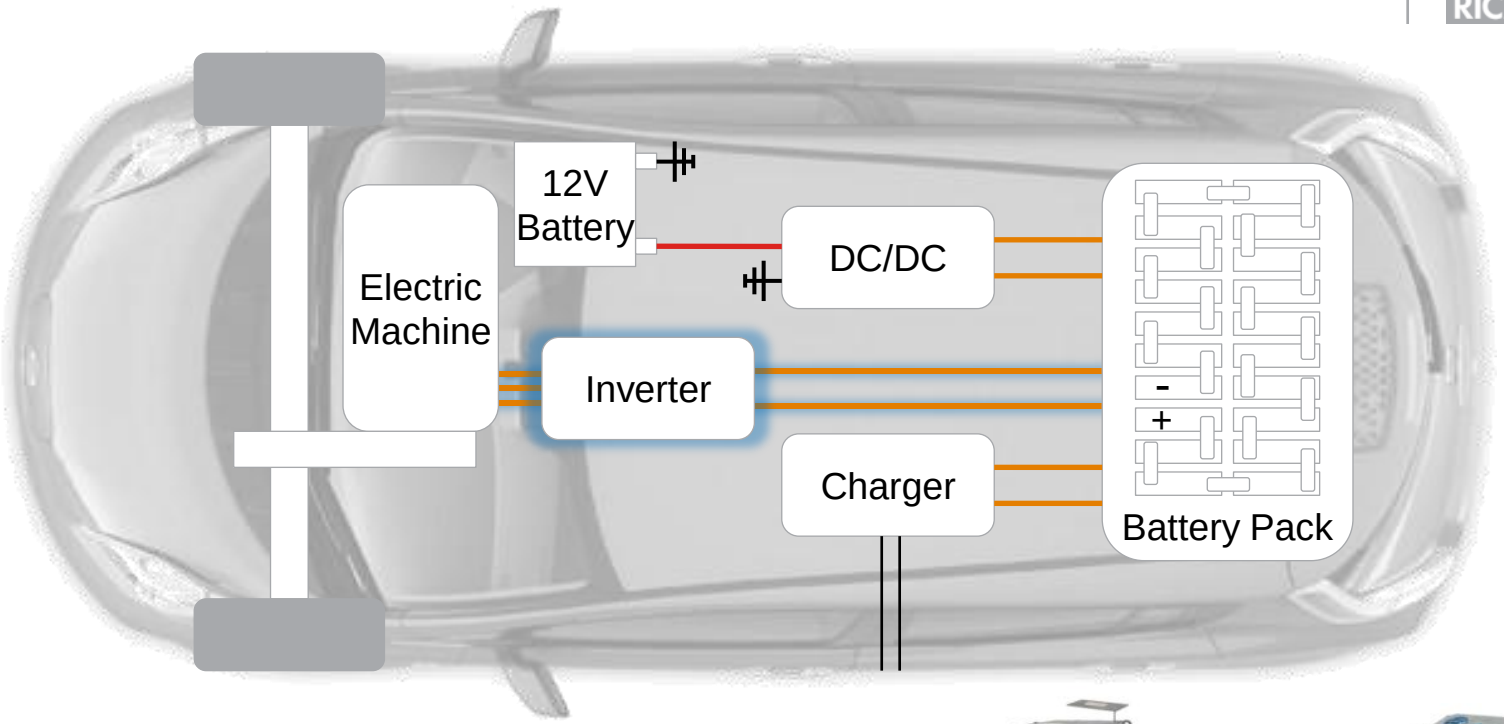

- Battery packs provide direct current (DC) at their output terminals.
- Electric machines are controlled by varying an alternating current (AC) waveform.
- The motor inverter provides this conversion between DC and AC and the torque control functionality.

Mitsubishi iMiEV Inverter

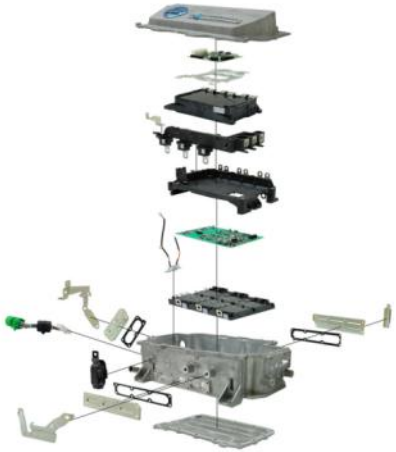

Nissan Leaf Inverter

Images courtesy of A2Mac1 & Ricardo 's EV /Hybrid Analysis. EVanalysis@ricardo.com

© Ricardo plc 2014

Component Overview – DC/DC converter

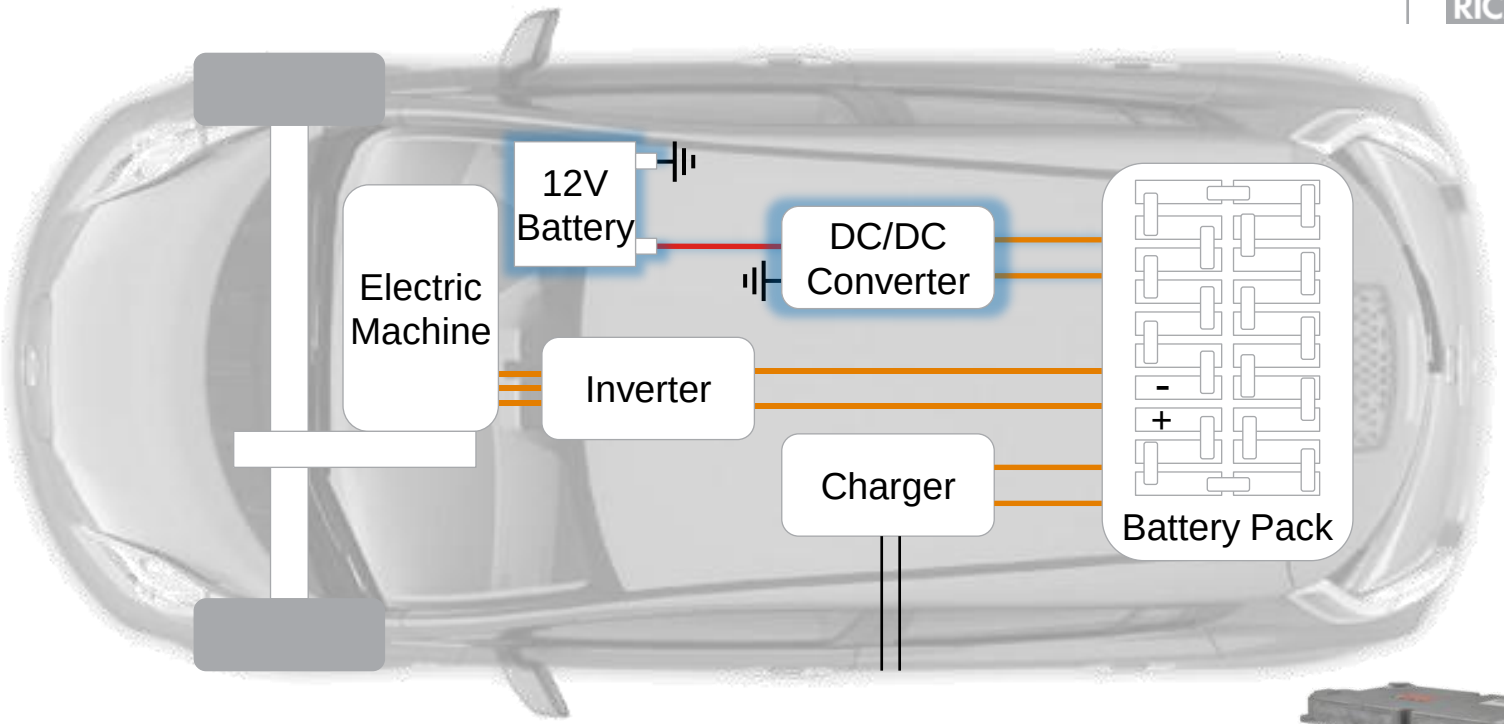

- EV's to date utilize the same 12 volt power system as traditional vehicles for low to moderate power electrical components.
- EV's don't have alternators like most vehicles with engines, so the 12 volt system power is supplied by the battery pack (with a 12V battery to supply transients).
- A DC/DC converter is used to convert power from battery pack voltage down to 12 volts.

Chevy Volt
DC/DC Converter

Images courtesy of A2Mac1 & Ricardo 's EV /Hybrid Analysis. EVanalysis@ricardo.com

© Ricardo plc 2014

Component Overview – Charger (AC Charging)

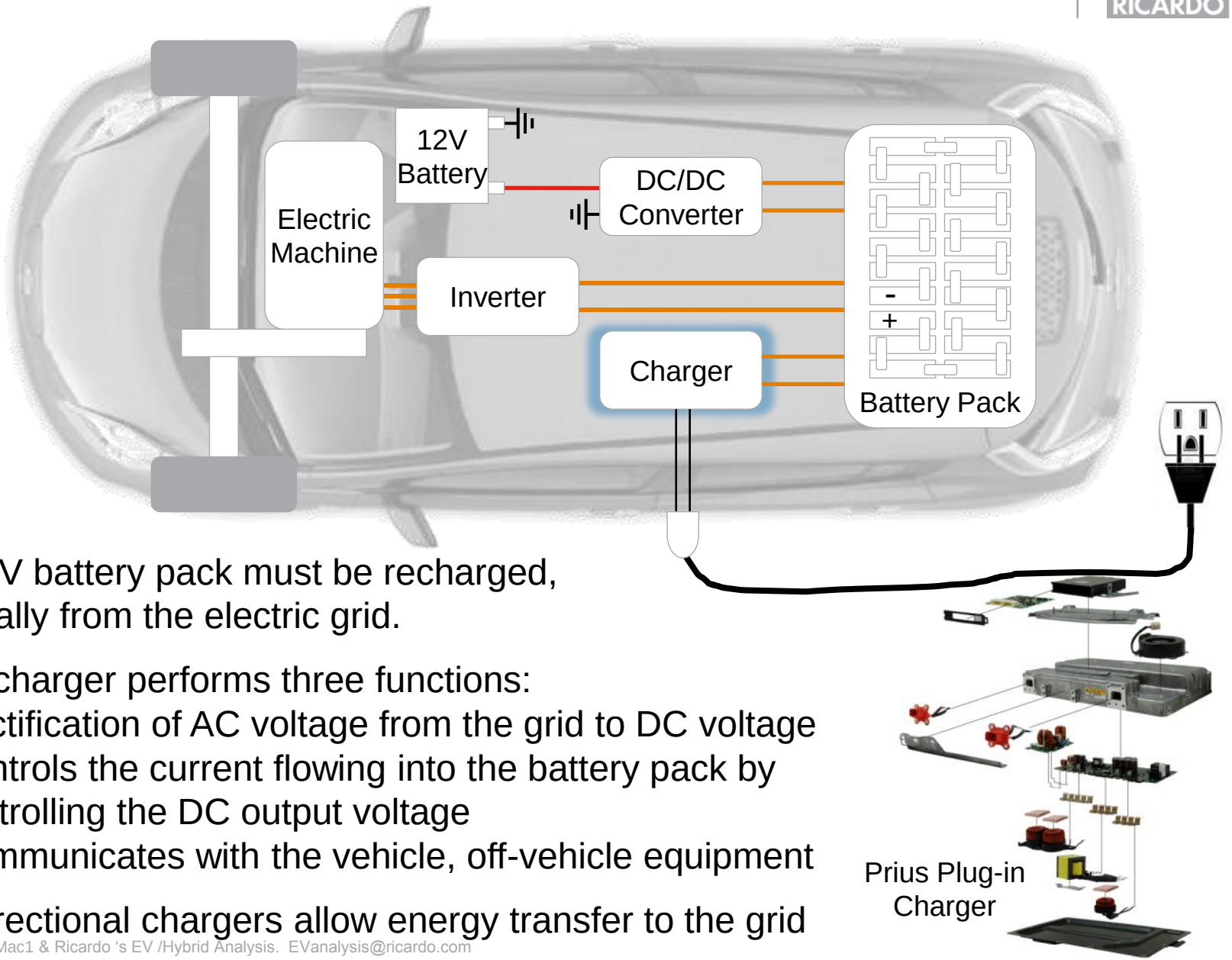

- An EV battery pack must be recharged, typically from the electric grid.
- The charger performs three functions:
  - Rectification of AC voltage from the grid to DC voltage
  - Controls the current flowing into the battery pack by controlling the DC output voltage
  - Communicates with the vehicle, off-vehicle equipment
- Bi-directional chargers allow energy transfer to the grid

Images courtesy of A2Mac1 & Ricardo 's EV /Hybrid Analysis. EVanalysis@ricardo.com

© Ricardo plc 2014

Component Overview – Charger (DC Charging)

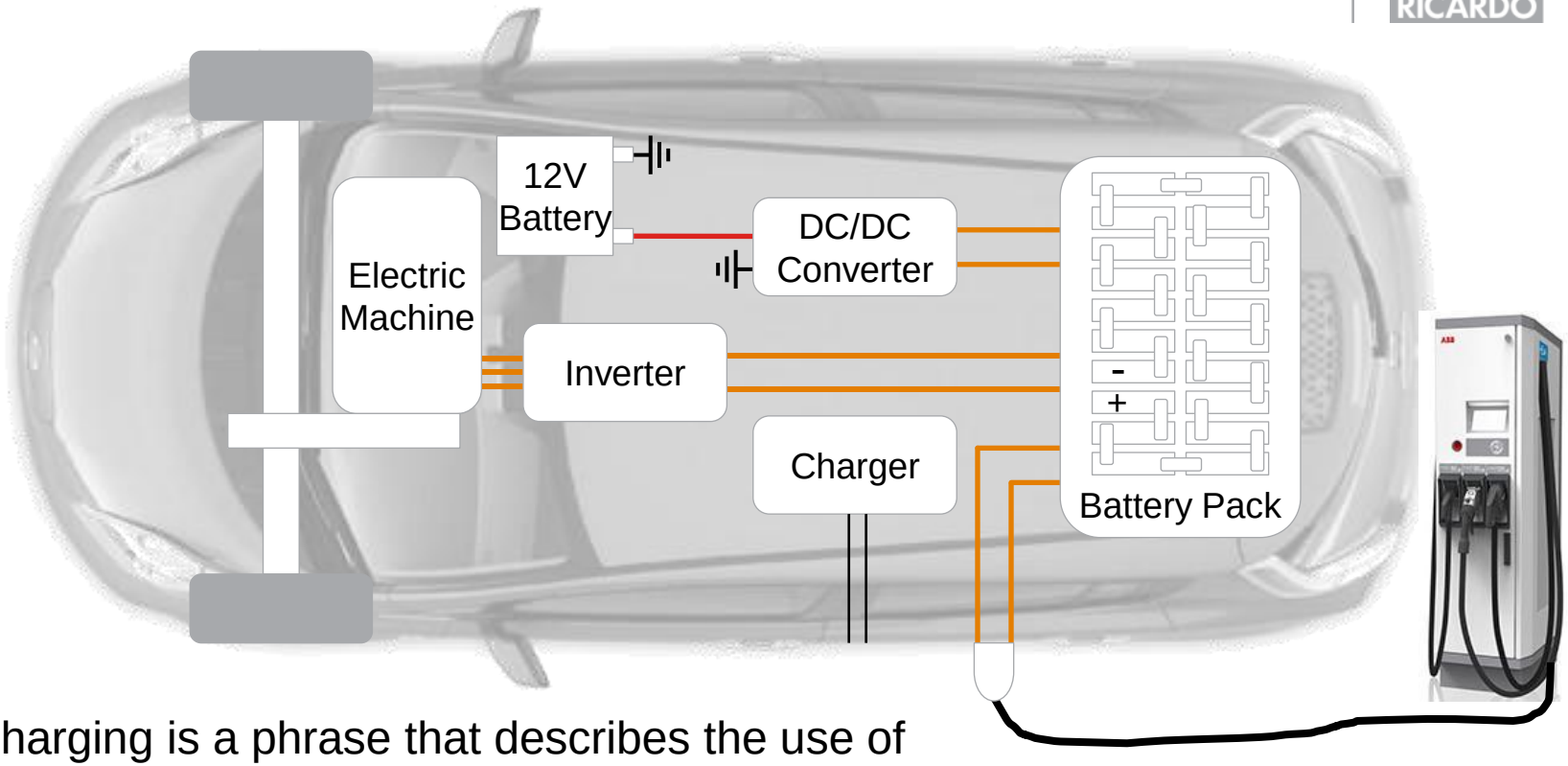

- DC charging is a phrase that describes the use of an off-vehicle charger.
- The off-vehicle charger connects directly to the battery, bypassing the on-board charger.
- Robust communication is required between the vehicle and off-board charger.
- An off-vehicle, high power charger is utilized because high power chargers are too heavy to justify installation in the vehicle and too costly to dedicate to one vehicle.

 © Ricardo plc 2014

Outline

- Introduction
- EV Powertrain Architecture – Component Overview
- **Vehicle Energy and Power Demands**
- Getting Energy Into the Battery
- Range Specific Comments

© Ricardo plc 2014

Power Flow During Portion of US Federal Test Procedure

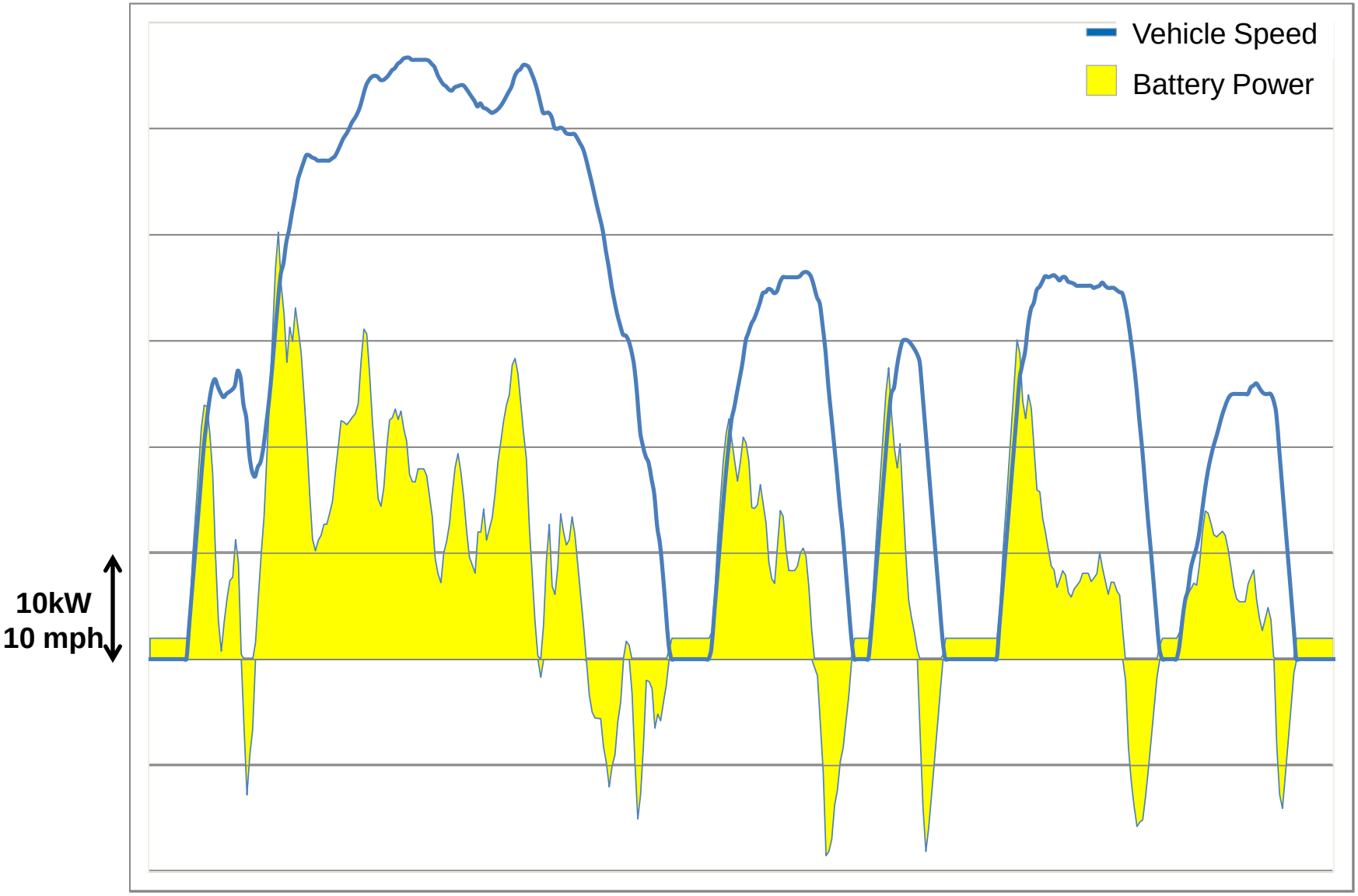

© Ricardo plc 2014

Power Requirements for International Driving Cycles

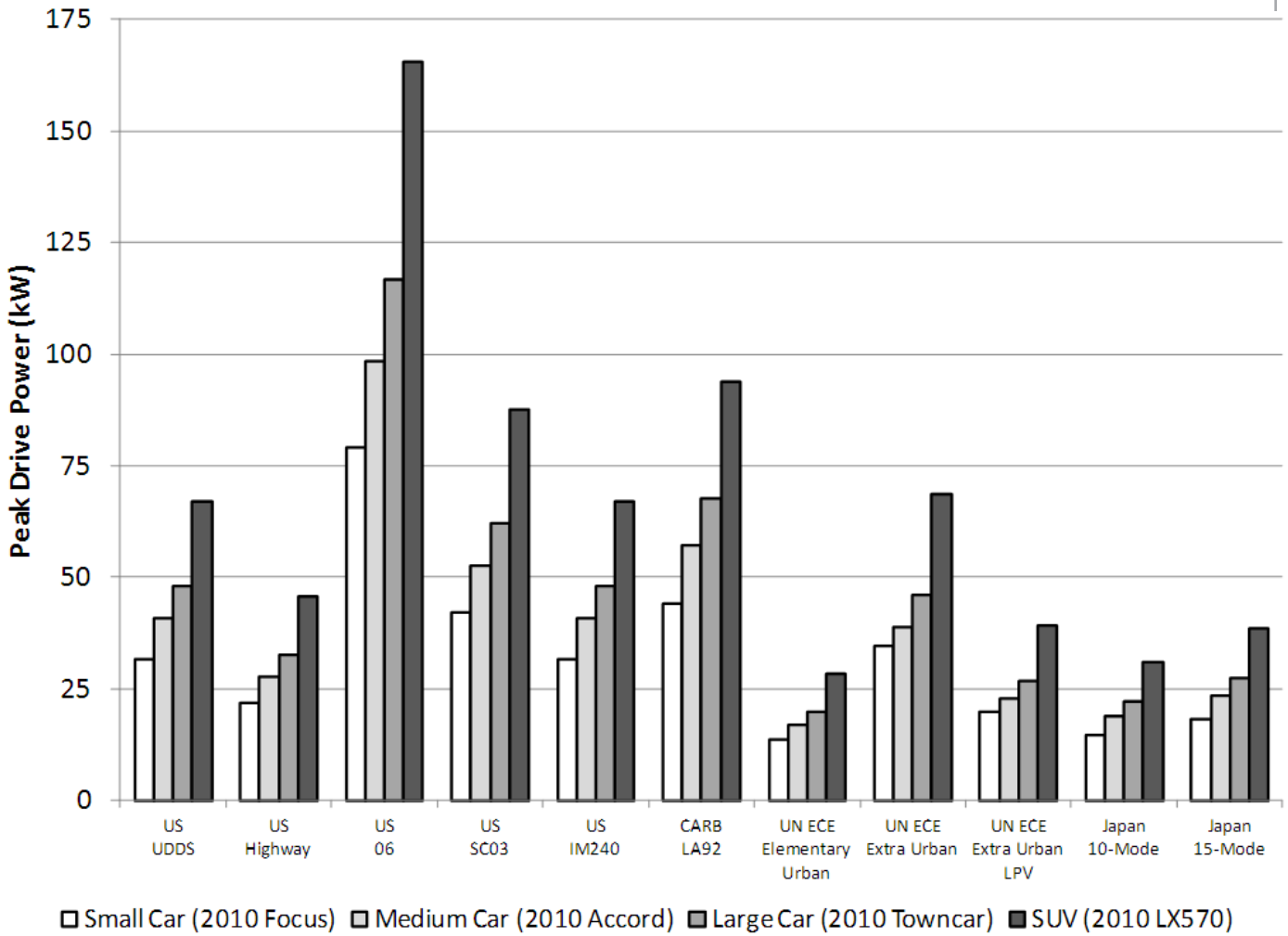

- The battery output must also accommodate efficiency losses, high voltage accessories such as A/C & power steering, and the DC/DC converter.
- These power levels are required across the entire temperature range.

© Ricardo plc 2014

Energy Requirements for International Driving Cycles

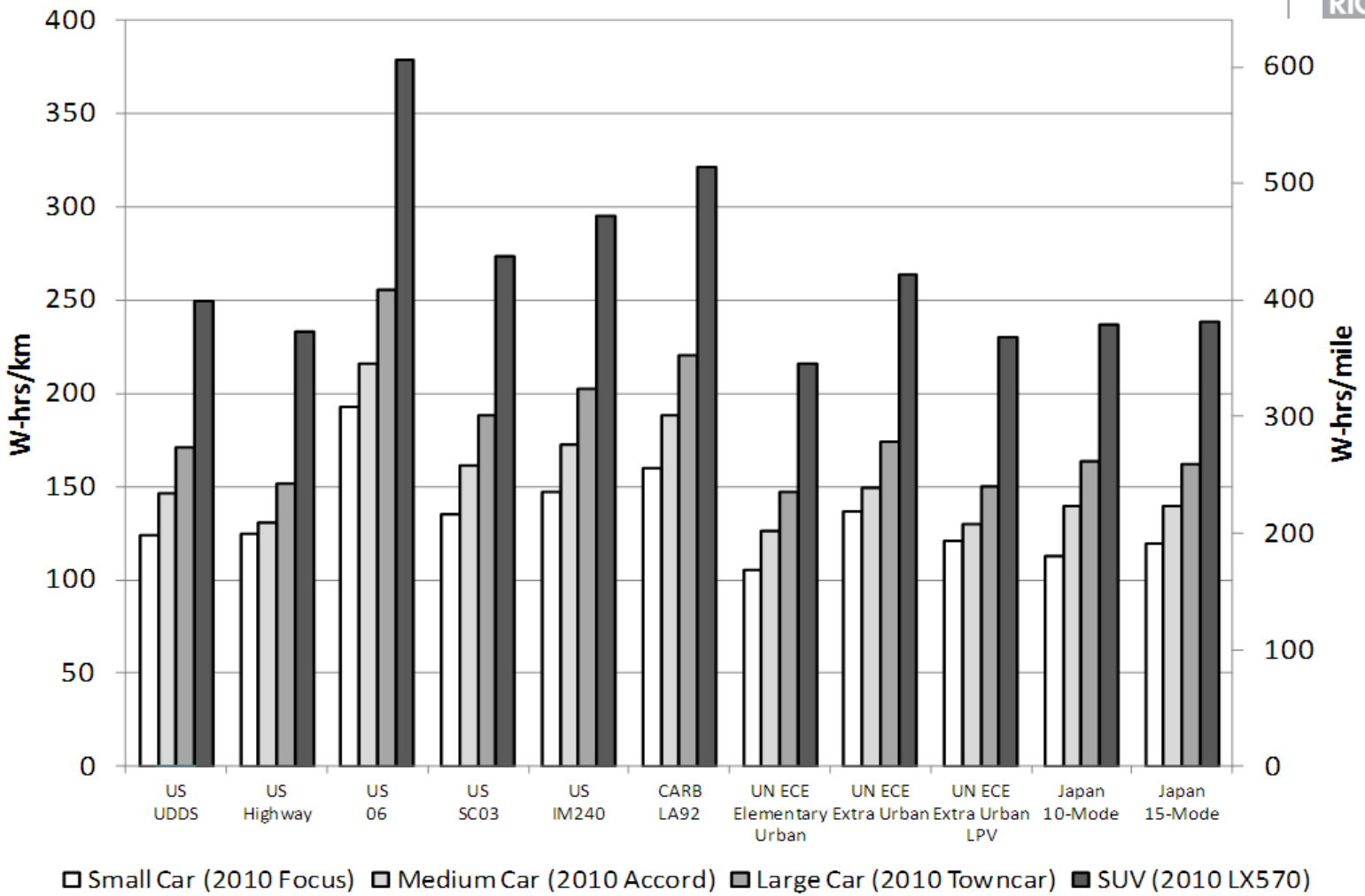

- Like the power values, efficiency losses and vehicle loads will increase these values.
- 400 mi interstate range requires ~150kW-hrs usable;1000+ kgs of today's battery

© Ricardo plc 2014

Outline

- Introduction
- EV Powertrain Architecture – Component Overview
- Vehicle Energy and Power Demands
- **Getting Energy Into the Battery**
- Range Specific Comments

© Ricardo plc 2014

Overview of three types of charging connectivity for on-vehicle and off-vehicle chargers[1]

Uses On-vehicle Charger

- Charging from a standard wall plug
  - Temporary installation

Wall Outlet

Charging Cable

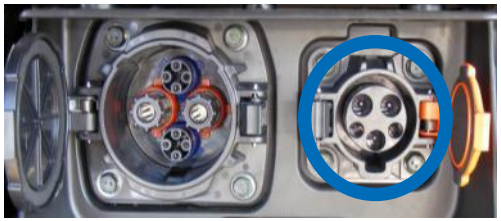

Vehicle AC Charging Inlet

- Charging from a permanently wired AC supply
  - Dedicated installation allows higher voltage & power than wall plug because a switch protects the outlet.

Wall Mounted

or

Pole Mounted

Off-vehicle Charger

- Charging from a permanently wired off-vehicle charger
  - Highest power levels
  - Not supported by all PIV's

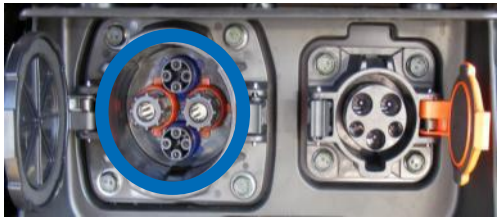

Vehicle DC Charging Inlet

[1] – Industry is developing wireless charging, but systems are still in the research phases and are not likely to be in a production vehicle for >5 years.

© Ricardo plc 2014

Comparison of charging power levels (and gasoline fueling)

(vehicle on-board charger &/or battery pack may limit actual power)

		Max. Voltage (Volts)	Max. Current (Amps)	Power (kW)	Range Gain (miles/hr)[a]	Fueling Time (% Drive Time)[b]
SAE J1772	AC Level I	120[c] (1ϕ)	16	1.9	5.5	1280%
	AC Level II	240[c] (1ϕ)	80	19	55	130%
	DC Level I	500 DC	80	40	80[d]	88%
	DC Level II	500 DC	200	100	200[d]	35%
IEC 62196-1	Mode 1	250 (1ϕ) or 480 (3ϕ)	16	7.7	22	320%
	Mode 2	250 (1ϕ) or 480 (3ϕ)	32	15	44	160%
	Mode 3	500 (3ϕ)	250	125	360[d]	20%
	Mode 4	600 DC	400	240	400[d]	18%
CHAdeMO		500 DC	100	50	100[d]	70%
Tesla Supercharger				120	340	20%
Gasoline at gas station		@10 gal/min & 30 mpg		20,000	18,000	0.4%

[a] – Assuming 350 W-hr/mile
[b] – Assuming 70 mph average highway driving speed
[c] – North American Limits
[d] – Assuming 350V battery pack

- **Today's fastest chargers still slow our driving down by 20% or more for long trips**

© Ricardo plc 2014

Outline

- Introduction
- EV Powertrain Architecture – Component Overview
- Getting Energy Into the Battery
- Using the Energy in the Battery
- **RANGE Specific Comments**

© Ricardo plc 2014

Nissan Leaf Battery Pack Assembly

Pack 24 kW-hr & ~300 kg = 80 W-hr/kg
Cell 125 W-hr & ~0.85kg = 147 W-hr/kg

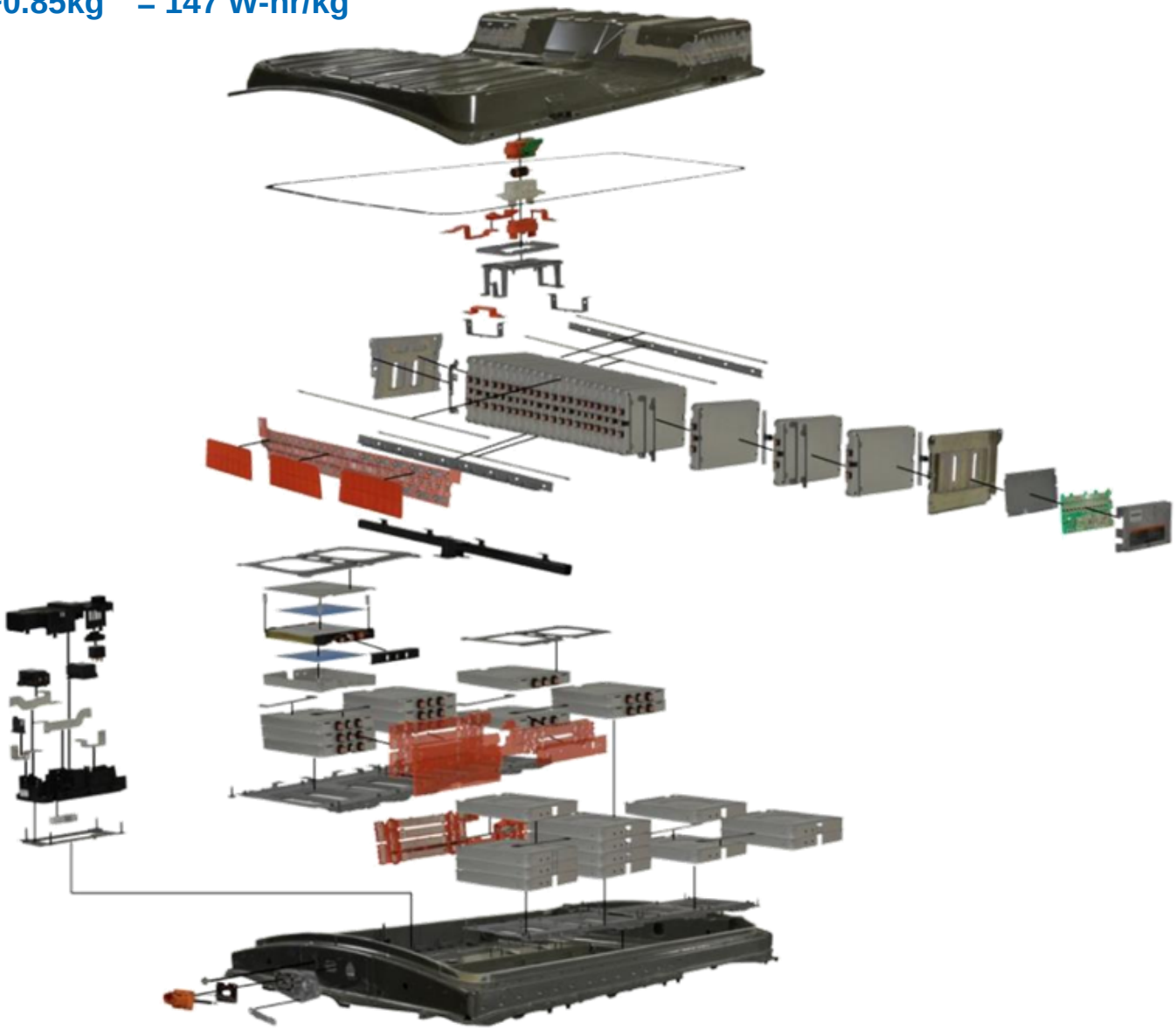

Images courtesy of A2Mac1 & Ricardo 's EV /Hybrid Analysis. EVanalysis@ricardo.com

© Ricardo plc 2014

Mitsubishi iMiEV Battery Pack Assembly

Pack 16 kW-hr & ~240kg = 67 W-hr/kg
Cell 185 W-hr & ~ 1.7kg = 109 W-hr/kg

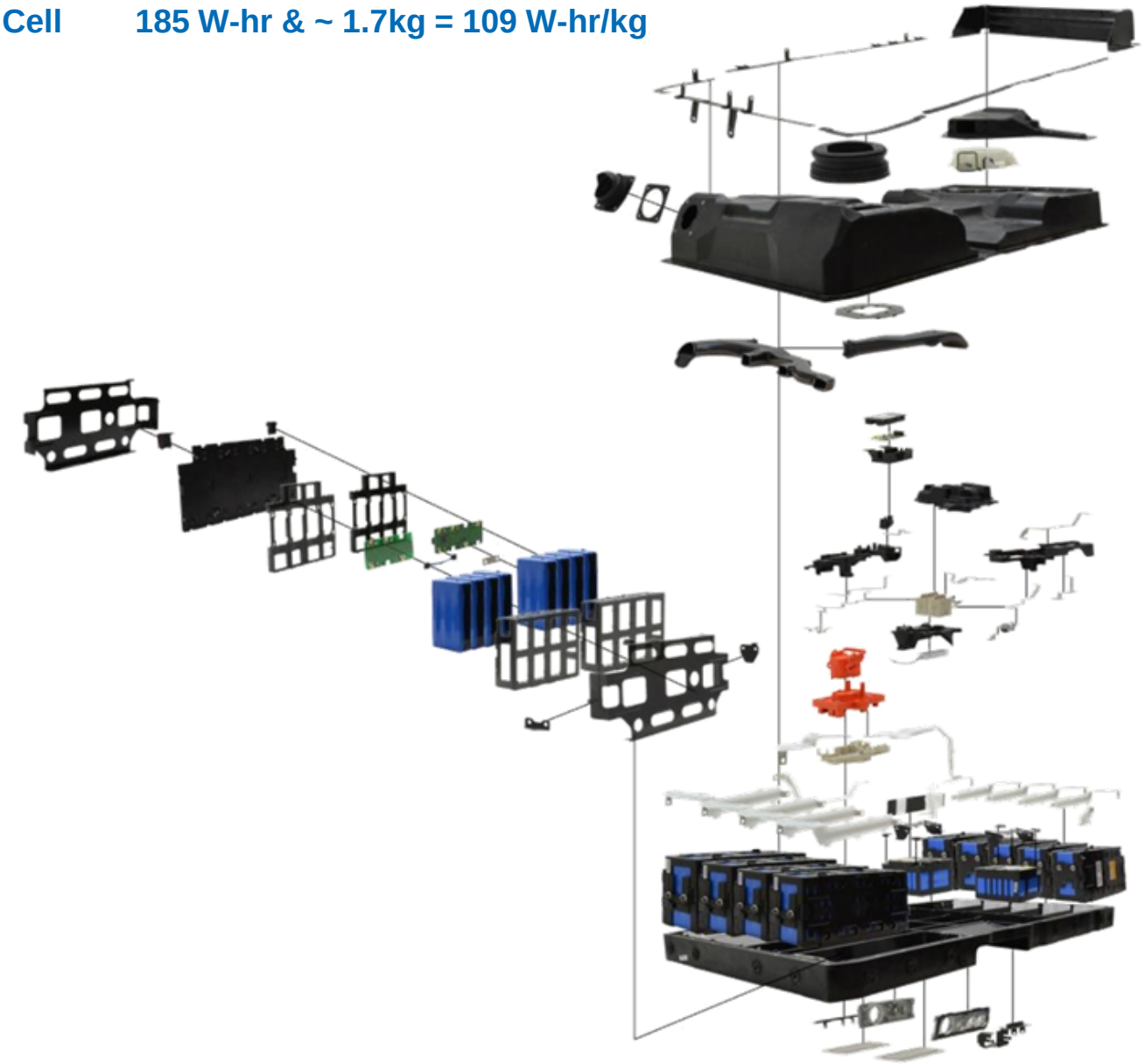

Images courtesy of A2Mac1 & Ricardo 's EV /Hybrid Analysis. EVanalysis@ricardo.com

© Ricardo plc 2014

iMiEV Weight Breakdown

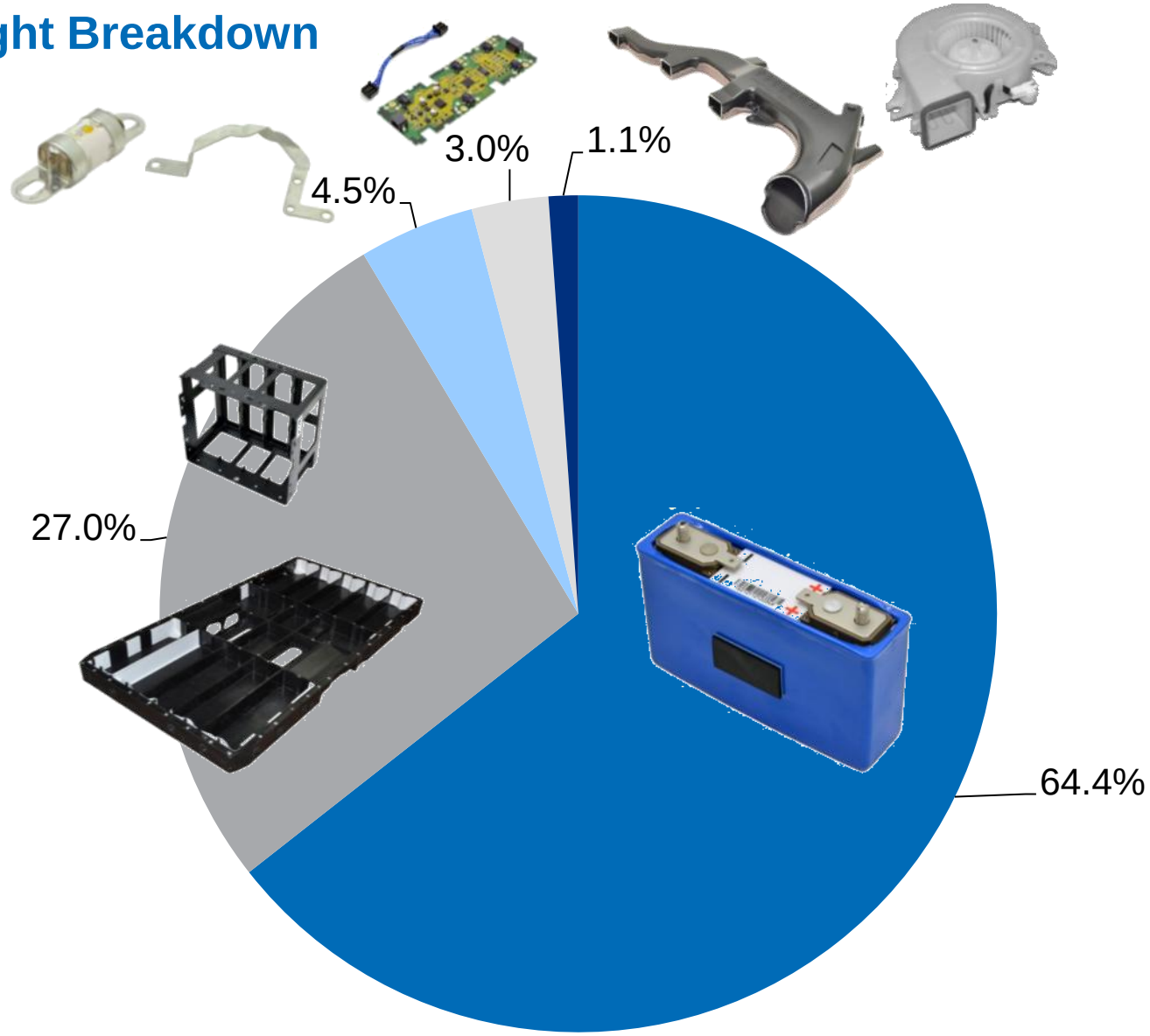

Energy | Structure/Mechanical | HV Electrical | Control/Safety | Thermal

© Ricardo plc 2014

Perspective on Battery Pack Size in 80 mile EV's

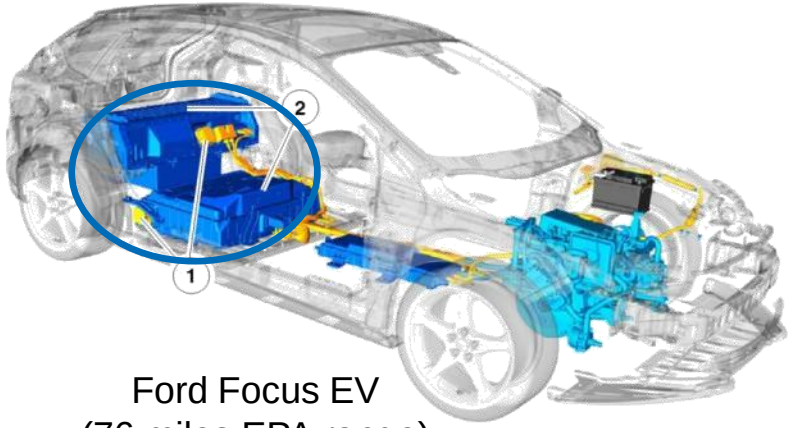

Ford Focus EV
(76 miles EPA range)

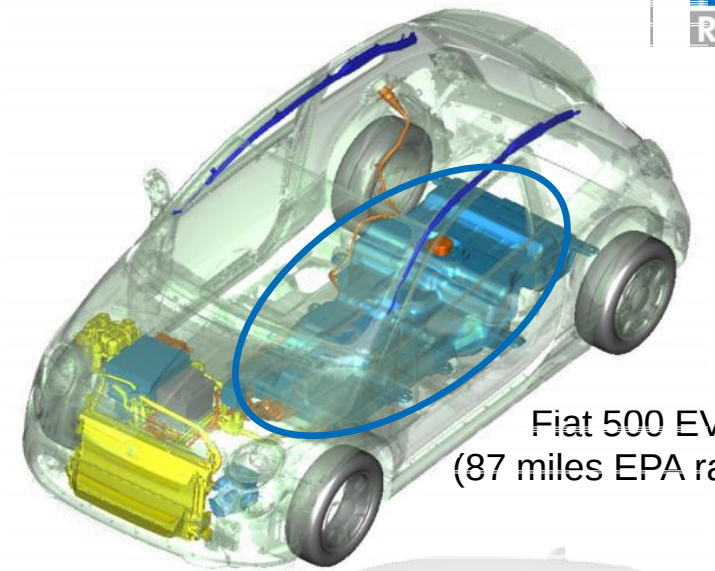

Fiat 500 EV
(87 miles EPA range)

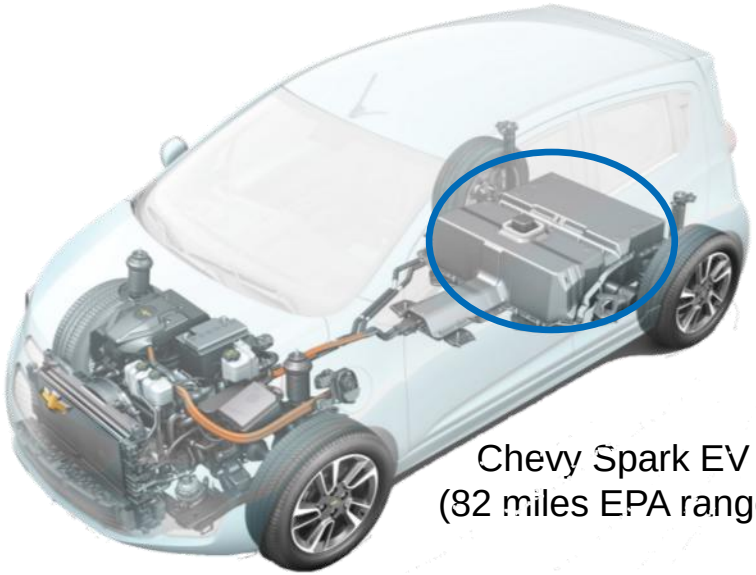

Chevy Spark EV
(82 miles EPA range)

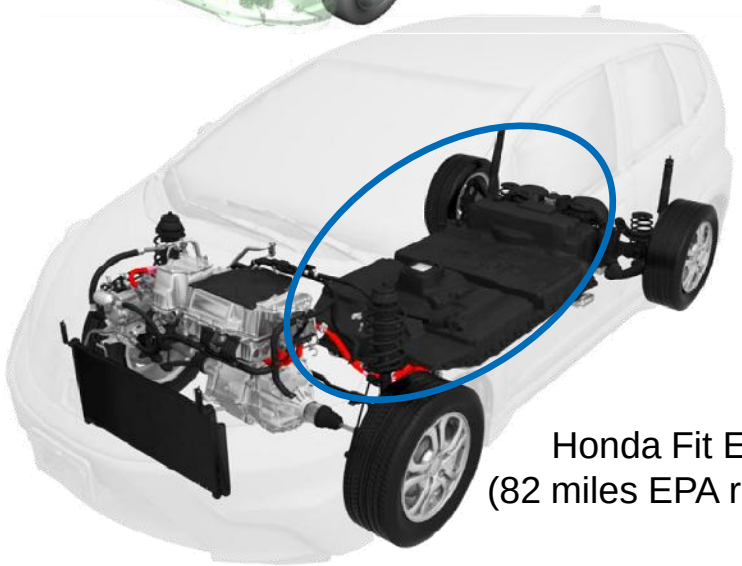

Honda Fit EV
(82 miles EPA range)

- A structural battery and/or a battery that is crash tolerant could significantly improve the packaging flexibility and help offset the weight penalty of these very significant structures.

Images from OEM's Emergency Response Guide, retrieved from EVSafetyTraining.org

© Ricardo plc 2014

Any Questions?

Ricardo Inc. – Detroit Technical Center,
40000 Ricardo Drive, Belleville, MI 48111

Neil Johnson
Associate Chief Engineer – Hybrids & Electric Systems

Direct Dial: **+1 (734) 394 4117**
Reception: **+1 (734) 397 6666**
Fax: **+1 (734) 397 6677**
Mobile: **+1 (734) 756-3281**
neil.johnson@ricardo.com

www.ricardo.com

 © Ricardo plc 2014