High flyers
Building a glider with everyday materials
Aeronautic Engineering
Forces
Unit for pupils from 9-12 years

This document is produced under the EC contract No 288989
This work is licensed under a Creative Commons Attribution - NonCommercial 4.0 International License

Index

Introduction **4**

Overview of the unit **5**

Resources **6**

Lesson 0 – Engineering an envelope **10**

0.1 Introduction - 10 minutes - small group and whole class discussion 11
0.2 Activity 1 What is an envelope? - 5 minutes, small groups 11
0.3 Activity 2 Matching envelopes to objects - 15 minutes - small groups and whole class discussion 12
0.4 Extension work - optional - 10-30 minutes - small groups 12
0.5 Conclusion – 10 minutes - whole class discussion 13
0.6 Learning outcomes - for optional assessment 14

Lesson 1 – What is the engineering problem? **15**

1.1 Introductory activity – How do engineers solve problems? – whole class/pair discussion – 10 minutes 16
1.2 What's your engineering challenge? – whole class/small group discussion – 10 minutes 16
1.3 What do we need to know? (ASK) – small group or pair discussion – 10 minutes 17
1.4 What is a glider and what are the different parts of a glider? (ASK) – Small group or pair discussion with pupil worksheet – 15 minutes 17
1.5 Conclusion – plenary - 5 minutes 18

Lesson 2 – What do we need to know? **19**

2.1 Introductory activity – A tug of war to understand forces – teacher/volunteer demonstration/ whole class discussion – 5 minutes 20
2.2 Forces on a glider – whole class discussion – 10 minutes 20
2.3 Learning from the past – whole class or pair discussion – 5 minutes 21
2.4 Changing stiffness by changing the shape – small group investigation – 10 minutes 21
2.5 Sorting materials – small group investigation – 15 minutes 21
2.6 Conclusion – plenary - 5 minutes 21

Lesson 3 – Let's build! **23**

3.1 Introductory activity – Checking the specifications – whole class discussion – 5 minutes 24
3.2 Demonstrating the launcher – teacher demonstration – 5 minutes 25
3.3 Making the fuselage – teacher demonstration/small group work – 10 minutes 25
3.4 Designing the glider wings – group discussion/focused recording – 10 minutes 25
3.5 Building and testing the gliders – practical group work – 50 minutes 26
3.6 Conclusion – 10 minutes 27

Lesson 4 – How did we do? **28**

4.1 Introductory activity – Do the gliders meet the specifications? - whole class glider testing –30 minutes 29
4.2 Reflecting on achievements – whole class discussion – 10 minutes 29
4.3 Engineering Design Process card sort activity – pupil pairs - 10 minutes 29
4.4 Communicating to others – group/pairs or individual work – 20 minutes 29

This document is produced under the EC contract No 288989
This work is licensed under a Creative Commons Attribution - NonCommercial 4.0 International License

4.5 Conclusion – plenary - 10 minutes 30

Appendices 31

Appendix 1: Engineering design cycle 31

Appendix 2: Story to set the context 32

Appendix 3: Aeroplanes and Gliders 33

Appendix 4: An old plane 34

Appendix 5: Making a launcher 35

Appendix 6: Launching the glider 36

Appendix 7: The importance of balance 37

Appendix 8: Aeronautical and Aerospace Engineers at Work 38

Appendix 9: Different types of Engineering 40

Worksheets and answer sheets 41

Worksheet 1 Lesson 0 – Engineering? 42
Worksheet 1 Lesson 0 - Engineering? – Teacher notes 43
Worksheet 1 Lesson 1- Glider parts 44
Answer sheet Worksheet 1 Lesson 1- Glider Parts 45
Worksheet 1 Lesson 2- Changing shape, changing stiffness 46
Worksheet 2 Lesson 2- Sorting Materials 47
Worksheet 1 – Lesson 3 - Planning our glider 48
Worksheet 2 Lesson 3 49
Worksheet 1 Lesson 4- EDP Card Sorting Activity 50
Answer Sheet Worksheet 1 Lesson 4- EDP Card Sorting Activity. 51
Worksheet 2 Lesson 4 – Reporting back to Michael and Mary 52

Science notes for teachers about aeronautical engineering 53

Some pupils' ideas about the science of forces and flight 56

Partners 58

This document is produced under the EC contract No 288989
This work is licensed under a Creative Commons Attribution - NonCommercial 4.0 International License

Introduction

This is one of ten ENGINEER primary school units developed to support science learning within the context of a wide range of engineering design challenges. Based on the successful Boston Museum of Science *Engineering is Elementary* model of inquiry-based learning, each unit features a different science area and engineering field and requires only inexpensive materials in order to support pupil-led science exploration and problem-solving design. The units have been developed to appeal to a wide range of pupils and to challenge stereotypes of engineering and engineers and so enhance both boys' *and* girls' participation in science, technology and engineering.

Our pedagogic approach

Central to each unit is the engineering design cycle: ask, imagine, plan, create, improve. Emphasising the cycle helps teachers to foster pupils' questioning and creativity, and gives space for pupils to develop their problem-solving skills including testing alternative options, interpreting results and evaluating their solutions. Tasks and challenges have been designed to be as open-ended as possible, and to avoid 'right answers'; in particular, the unit developers have aimed to avoid competition which may alienate some pupils, while retaining the motivation of wanting to solve a problem. An important goal of all of the units is to maximise opportunities for group work and to support pupils in learning to work together and communicate their ideas effectively. Students need to discuss their ideas as they explore a new problem, work out what they need to know and share their findings, design solutions, and then improvements.

How the units are organised

Each unit begins with Lesson 0, a general preparatory lesson which is common to all ten units. Teachers choosing to use more than one unit will want to start with this lesson the first time they use the units and begin at Lesson 1 in subsequent units. Lesson 1 introduces a story context or problem which drives what happens next: Lesson 2 focuses on exploring the science that the pupils need to solve the problem, while in Lesson 3 they design and build their design solution. Finally, Lesson 4 is an opportunity to evaluate, present, and discuss what they have done.
Each unit is, however, unique, and some units are more demanding in terms of science understanding and the length of time required for the unit varies. Likely timings and age targets are indicated in each unit overview. Units have been designed to be flexible, however – teachers can choose which activities they want to include, and there are options for differentiating activities to cater for a range of abilities.

Teacher support

Each unit guide has been written to provide appropriate science, technical and pedagogic support for teachers with a wide range of experience and expertise. Each lesson includes suggestions and tips for supporting inquiry-based learning, classroom organisation and preparation. Science and making activities are illustrated with photographs. Science pedagogy notes in the Appendix explain and discuss the science involved in the unit and how to support understanding of the central concepts for pupils in the age range. Worksheets which can be copied and answer keys are also provided.

This document is produced under the EC contract No 288989
This work is licensed under a Creative Commons Attribution - NonCommercial 4.0 International License

Overview of the unit

Duration: 4 hours 40 minutes, (280 minutes)

Target group: 9, 10 and 11 year old pupils

Description: This unit allows pupils to explore forces and flight through a practical hands-on challenge where they work in teams to investigate materials and then design, make and test their own gliders.

Science curriculum: this unit relates to the science curriculum for forces and materials.

Engineering field: this unit introduces the field of aeronautic engineering.

Objectives: in this unit the pupils will learn that:

- Engineers follow the five steps in the Engineering Design Process (ask, imagine, plan, create and improve). Engineers who work on things which fly are aeronautic engineers.
- Understanding forces is an important part of understanding how aircraft fly. When a glider is moving forwards its wings create an upwards force called lift. When lift overcomes the downwards force due to gravity, the glider will stay up.
- In order to build an effective glider out of everyday materials it's necessary to understand more about the properties of those materials.
- It is not a sign of failure if a first design does not work; testing, evaluating and improving a design is a normal part of the Engineering Design Process.
- They are able to demonstrate what they have learned during their investigations and practical design challenge by communicating to others.

The lessons in this unit:

A **Preparatory lesson** aims to raise awareness of how engineering contributes to our daily lives in ways that are not always obvious.

In Lesson 1, the engineering problem, its context and the Engineering Design Process is introduced.

In Lesson 2, the 'ask' element of the Engineering Design Process leads to an investigation of forces and materials.

In Lesson 3, pupils apply the Engineering Design Process to meet the challenge. The challenge is to design and build a glider using everyday materials that can travel for 3m in a straight line.

In Lesson 4, it's time to evaluate the process of creating the glider. This is also the moment for pupils to show if they were able to meet all the criteria and to talk about how they made improvements.

This document is produced under the EC contract No 288989
This work is licensed under a Creative Commons Attribution - NonCommercial 4.0 International License

Resources

List with all the materials and quantities needed for 30 pupils.

Note: you do not need all the materials listed below, just a reasonable selection of them. Please see *Additional Notes for lessons* in the appendix for more details.

Material	Total number	Lesson 0	Lesson 1	Lesson 2	Lesson 3	Lesson 4
Launcher made of thick card and elastic.	4				4	
Fuselage	8-16				8-16	
Thin Card	30			8-10	**30**	
A4 Paper	100			16-30	100	

This document is produced under the EC contract No 288989

This work is licensed under a Creative Commons Attribution - NonCommercial 4.0 International License

Masking Tape	8-10			8-10	8-10	
Plasticine	1kg			1Kg	1kg	
Plastic Bag	16-30			8-10	15-30	
Straws	100			10-20	100	
Tracing Paper	16-20			8-10	16-20	
Newspaper	1 paper or 16-20 sheets				16-20 sheets / 1 paper	

This document is produced under the EC contract No 288989
This work is licensed under a Creative Commons Attribution - NonCommercial 4.0 International License

Scrap Cloth	10			10	10	
Paperclips	1 box			8-10	1 box	
String	10m			8-10 x 10cm	10m	
Measuring Tape / Trundle Wheel	2				2	
Scissors	8-10				8-10	

This document is produced under the EC contract No 288989
This work is licensed under a Creative Commons Attribution - NonCommercial 4.0 International License

Glue	8-10			8-10	8-10	
Lolly Sticks / Skewers	32-40			8-10	32-40	
Rope	1		1			
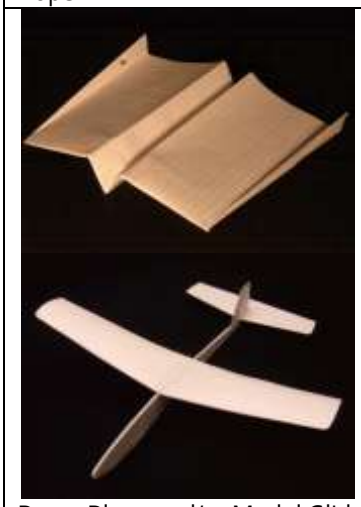 Paper Plane and/or Model Glider	1		1			

This document is produced under the EC contract No 288989
This work is licensed under a Creative Commons Attribution - NonCommercial 4.0 International License

Lesson 1 – What is the engineering problem?
Finding out about the challenge

Duration: 50 minutes

Objectives, in this lesson the pupils will learn that:

- engineers solve problems using the five steps of the Engineering Design Process – ask, imagine, plan, create and improve;
- engineers who work on things which fly through the air are called aeronautic engineers;
- gliders are aircraft *without* engines and so another force (e.g. being pulled by a winch) is needed to move them forwards so that they will lift into the air.

Resources (for 30 pupils)

- Copies of appendices.
- If internet access is available the class can see gliders being launched.
- Worksheet 1 – one per pupil

Preparation

- Prepare YouTube videos so that they can explain the launch methods to the pupils if necessary.
- Print a copy of Worksheet 1 for each pupil.

Working method

- Teacher presentation
- Whole class discussion
- Small group/pair discussion
- Focused recording (Worksheet 1)

Key ideas in this lesson

The five stages of the Engineering Design Process are ask, imagine, plan, create and improve. These stages can be applied to any kind of engineering challenge. The 'ask' stage is about finding out what you need to know to solve a challenge or problem.

Context and background

In this unit, the pupils receive a challenge from two children living in the UK who want to know how to design and build a glider using everyday materials. People in the UK often live very close together and the children want to fly their glider between their bedroom windows – so the glider has to be capable of travelling 3m in a straight line. The pupils need to follow the five stages of the Engineering Design Process in order to succeed at the challenge. The first step is the 'ask' stage where the pupils establish what they need to know more about in order to complete their challenge successfully.

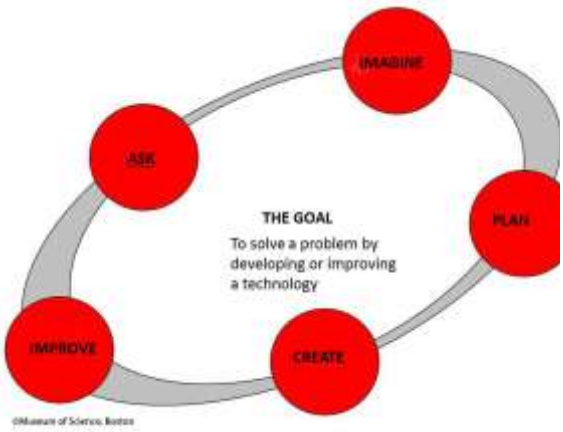

This document is produced under the EC contract No 288989
This work is licensed under a Creative Commons Attribution - NonCommercial 4.0 International License

1.1 Introductory activity – How do engineers solve problems? – whole class/pair discussion – 10 minutes

Facilitate a discussion about the Engineer Design Process (EDP) with the class, using the following scenario as a guide if you wish. Pupils can discuss their answers in pairs first. Record the pupils' answers and group them according to the five stages of the Engineer Design Process – ask, imagine, plan, create, improve.

Tip: Pupils usually find it easier to think of things that relate to the 'imagine', 'plan' and 'create' stages but don't automatically consider 'ask' and 'improve'.

General question
What do engineers do?

Example scenario
What would an engineer need to do in order to solve a problem like finding a way for cars to cross a river?

Questions to encourage pupils to think about the 'ask' stage:

- What would an engineer need to do *before* they build the bridge?
- What would an engineer need to do at the very beginning if they walked down to look at the river?

Questions to encourage pupils to think about the 'improve' stage:

- How would an engineer know that the bridge works successfully?
- If the bridge didn't work successfully what would an engineer need to do next?

Show pupils the EDP diagram (see Appendix 1) and ask them to choose the EDP step that matches each cluster of answers. Engineers work on all sorts of different problems and they do not always follow all of the EDP steps in order (and sometimes they loop back to an earlier step and start again in order to improve what they've done).

1.2 What's your engineering challenge? – whole class/small group discussion – 10 minutes

Read the e-mail from Mary and Michael to the pupils and show them the illustration of their houses and bedroom windows (see Appendices 2 &3).

Ask the pupils if they can think of any other fun ways that Mary or Michael could use to send each other messages (and gifts) between their bedroom windows (e.g. setting up a pulley system or signaling to each other in Morse code). They can discuss other ideas in pairs first.

At the end of the discussion, remind the pupils that Michael and Mary have asked them how to make a glider. In this challenge, pupils work as AERONAUTIC ENGINEERS. Aeronautic engineers work on challenges to do with things that fly (Appendix 8).

This document is produced under the EC contract No 288989
This work is licensed under a Creative Commons Attribution - NonCommercial 4.0 International License

Ask small groups to come up with a list of things that their glider needs to be able to do to meet the challenge set by Mary and Michael. These are called the 'specifications'. Record what they come up with so that they can refer to it again in Lesson 3.

Key specifications are:

- The glider must fly at least 3m (so it reaches the other house)
- The glider must fly in a straight line (so it goes through the other window)
- The glider must be made of everyday materials (so that Michael and Mary could make it)
- If possible, the glider should be able to carry an extra 10g (to represent small gifts)

1.3 What do we need to know? (ASK) – small group or pair discussion – 10 minutes

Ask small groups to come up with three things they think they would need to know before they could build a glider and record their answers. What stage of the EDP do they think they are doing?

Example questions (the answers to which are covered in Lessons 1-3) are:

- What is a glider?
- What are the parts of a glider and what does each part do?
- How and why do gliders fly?
- What makes a good/bad glider?
- Which materials are best for building with?

1.4 What is a glider and what are the different parts of a glider? (ASK) – Small group or pair discussion with pupil worksheet – 15 minutes

Show pupils different images of planes and gliders (**Appendix 3**). Ask pupils to discuss the following questions in pairs or small groups before sharing their answers with the whole class.

- What differences can the pupils notice between a plane and a glider?
- How do they think gliders gets up into the air?

There are several differences, but the most important is that gliders *don't have engines*. There are three types of launch methods for a glider - a winch launch, a tow launch, or a bungee launch. If possible, show videos of the different launch methods, or describe them to the pupils.

Tip: *Showing videos of glider launches works really well as part of this lesson, but does need some advance preparation. There are several videos of glider launches on YouTube and similar video sites. Using the keywords "Glider", "Launch" and "Tow" (bungee/winch) will usually give you several good options.*

Current YouTube videos (1/5/13)
Winch launch you tube video http://www.youtube.com/watch?v=BHms8MVHm5I
Tow launch http://www.youtube.com/watch?v=bpxgwSYUHfI
Bungee launch http://www.youtube.com/watch?v=KFFJx4pwHnU

This document is produced under the EC contract No 288989
This work is licensed under a Creative Commons Attribution - NonCommercial 4.0 International License

Worksheet 1 can be used to enable pupils to become familiar with the names and functions for the different parts of a glider. More able pupils can just be provided with the picture of the glider to label and asked to write their own descriptions for the glider parts.

Tip - You may find it useful to keep a list of all of the specialist vocabulary and leave it on display as you go through the unit.

1.5 Conclusion – plenary - 5 minutes

Check the pupils' understanding with respect to the learning outcomes for the lesson.

Questions to simulate discussion could include:

- Why do you think engineers use the Engineer Design Process (EDP)?
- What are the five stages of the EDP and what do they mean?
- Can you give some examples of what an aeronautic engineer does?
- Can you describe the differences between a glider and an aeroplane?

In the next lesson, pupils learn more about how gliders fly and what materials are good for building different parts of the glider.

This document is produced under the EC contract No 288989
This work is licensed under a Creative Commons Attribution - NonCommercial 4.0 International License

Lesson 2 – What do we need to know?
Finding out about forces in flight and suitable materials for gliders

Duration: 50 minutes

Objectives, in this lesson the pupils will learn that:

- where two forces act on an object (e.g. a glider) the object moves in the direction of the biggest force;
- there is a downwards force due to gravity known as WEIGHT and an upwards force generated by the wings of a moving glider known as LIFT;
- different materials are better for different parts of the glider, but that properties of materials (e.g. stiffness) can be changed by changing the shape of the material.

Resources (for 30 pupils)

- Copy of appendices
- Rope for tug of war
- Paper plane and model glider
- Worksheets 1 and 2 – 1 per small group
- 5 sheets of paper per small group
- Materials that will be available in Lesson 3 to build the glider (See *Additional Notes for lessons* in the appendix).

Preparation

- Source the materials needed for the investigations (see Resources p.5)
- Print the worksheets (1 per group)

Working method

- Teacher/volunteer demonstration
- Class discussion
- Small group investigations

Key ideas in this lesson

- The movement of a glider is a result of all the forces acting on it, especially WEIGHT and LIFT, and a careful balance of these two forces is needed to make a glider that flies in a straight line.
- Gliders need to be light (in order to reduce the downwards WEIGHT force), but also stiff enough to hold their shape.

Context and background

The 'ask' element of the Engineering Design Process leads to an exploration of the forces involved in glider flight and an investigation into the properties of some everyday materials that can be used to build a successful glider in Lesson 3.

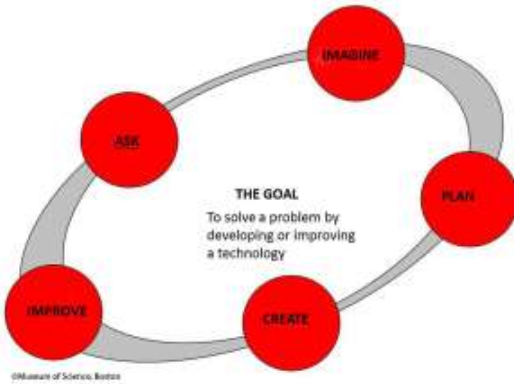

This document is produced under the EC contract No 288989
This work is licensed under a Creative Commons Attribution - NonCommercial 4.0 International License

2.1 Introductory activity – A tug of war to understand forces – teacher/volunteer demonstration/ whole class discussion – 5 minutes

Remind pupils about the 'ask' stage of the Engineering Design Process. How and why do gliders fly?

To answer this question we need to understand more about forces.

Choose a pupil to stage a mock tug-of-war with you at the front of the class, set up to answer the following questions:

- What happens if I pull harder than the pupil?
- What happens if the pupil pulls harder than me?
- What happens if we both pull equally hard?

Use this demonstration to ensure that the pupils understand that the rope moves in the direction of the greatest force and that forces which act in opposite directions to each other balance each other out.

2.2 Forces on a glider – whole class discussion – 10 minutes

Show the pupils a paper plane and ask the following questions:

- Why is this an example of a glider?
- What happens when you let go of the glider (*without* throwing it)*?*
- What force causes things to fall down when there is nothing there to hold them up?

Show the pupils a model glider (or the paper plane) and ask the following questions (and use the information below).

- What do we call the upwards force that helps a glider to fly? Which part of a glider is important for this?
- What do I need to do to the glider to make it fly through the air?

Use the information below to help pupils to understand the forces involved in glider flight:

Scientists and engineers call the downwards force that is produced by gravity, WEIGHT. How much weight 'force' there is on an object depends on GRAVITY and MASS. Mass is how much 'stuff' there is in an object and it is measured in grams/kilograms. In everyday life we usually use the word 'weight' when we are talking about 'mass'. If you want to make something fly, like a glider, you want to make it as light as possible so that the downwards WEIGHT 'force' can be kept as small as possible. This is an important principle for an aeronautic engineer. Scientists and engineers call any force that works upwards, LIFT. Wings only help to lift a glider into the air if the glider is moving forward fast enough, because it is the movement of air over an aircraft's wings that is essential to creating LIFT. If you want a glider to fly in a straight line, you need the forces of WEIGHT and LIFT to be carefully balanced, just like in the tug-of-war demonstration.

This document is produced under the EC contract No 288989
This work is licensed under a Creative Commons Attribution - NonCommercial 4.0 International License

2.3 Learning from the past – whole class or pair discussion – 5 minutes

Show the pupils an illustration of an old fashioned plane (**Appendix 4)** and ask them to look at the construction of the wings – a wooden frame/skeleton covered in cloth or oiled paper.

Ask the pupils the following questions and relate their answers to the forces of flight and the need for the glider to fly in a straight line:

- Why have they built the wings like that, using a mixture of wood and cloth/paper*?*
- Why is it good to have a lighter plane?
- Why do they need the covering for the wing as well as a frame*?*
- What properties does the frame material need to have?
- What properties does the covering material need to have?

The key points for pupils to understand when they choose materials for the wings of their glider are that both the frame and the covering material need to be as light as possible, but that the frame also needs to be stiff enough to support both itself and the covering.

2.4 Changing stiffness by changing the shape – small group investigation – 10 minutes

Pupils work in small groups to carry out an investigation to find out if changing the shape of a material changes its stiffness, using **Lesson 2 Worksheet 1** for instructions and to record their findings.

Discuss with the pupils what they have noticed.

- Which shapes are stiff enough to hold their shape and to stand up without falling over?
- How do they think they could use this knowledge to help them when they are building their gliders?

2.5 Sorting materials – small group investigation – 15 minutes

Pupils work in small groups to sort the materials they need to use to build the glider according to whether they think they are good for the wing frame, the wing covering or to connect different parts together (**Lesson 2 Worksheet 2).**

Tip: You may need to remind pupils that some materials can be made stronger just by changing their shape. In this way, for example, paper may be suitable for the wing frame as well as the wing covering.

2.6 Conclusion – plenary - 5 minutes

Ask pupils what they have learned about the forces that are acting on a flying glider.

- What direction would the glider move in if the downwards WEIGHT force was bigger than the upwards LIFT force (ask pupils to point).
- What direction would the glider move in if the upwards LIFT force was bigger than the downwards WEIGHT force (ask pupils to point).

This document is produced under the EC contract No 288989
This work is licensed under a Creative Commons Attribution - NonCommercial 4.0 International License

Ask pupils for feedback on what they have learned about the different materials and what they could use to make the wings of their glider, giving reasons for their choices.
In the next lesson they will build a glider using the materials they have tested. The glider needs to be able to travel for 3m in a straight line (and possibly carrying a 10g mass).

This document is produced under the EC contract No 288989
This work is licensed under a Creative Commons Attribution - NonCommercial 4.0 International License

Lesson 3 – Let's build!
Design and build your glider

Duration: 90 minutes

Objectives, in this lesson the pupils will learn that:

- they can apply their knowledge (from the 'ask' stage) to the next stages of the Engineering Design Process (imagine, plan and create) to design and build a glider;
- they can test their gliders and use the 'improve' stage of the EDP to produce a glider that is capable of consistently flying in a straight line for 3m;
- repeated testing is an important part of the EDP. Very few ideas work perfectly the first time and working out what to improve is how engineers learn.

Resources (for 30 pupils)

- Set of materials to build the gliders with
- Worksheet 1 - Planning
- Resource 1 Fuselage template per group plus some spares

Preparation

- Make at least 4 glider launchers (**Appendix 5**)
- Build an example glider
- Clear and prepare an area for glider testing
- Print copies of the fuselage template and Worksheet 1 - Planning
- Plan groups of 3-4 pupils

Working method

- Class discussion
- Teacher demonstration
- Small group work
- Focused recording (Worksheet 1)

Key ideas in this lesson

- The Engineering Design Process and how it works in practice.

Context and background

In this lesson the pupils go through the 'imagine', 'plan', create' and 'improve' stages of the Engineering Design Process. This lesson enables pupils to apply the knowledge gained in Lessons 1-2 (during the 'ask' stage of the Engineering Design Process) about the forces involved in flight and the properties of materials. The pupils use this knowledge to help them to construct a glider that is capable of consistently flying in a straight line for 3m. They learn that multiple tests and adjustments are often needed as part of the 'improve' stage.

This document is produced under the EC contract No 288989
This work is licensed under a Creative Commons Attribution - NonCommercial 4.0 International License

3.1 Introductory activity – Checking the specifications – whole class discussion – 5 minutes

Remind the pupils of the challenge set by Mary and Michael and the list of specifications they put forward for the glider during Lesson 1. These are:

- The glider must fly at least 3m (so it reaches the other house).
- The glider must fly in a straight line (so it goes through the other window).
- The glider must be made of everyday materials (so that Michael and Mary could make it).
- If possible, the glider should be able to carry an extra 10g (to represent small gifts).

Ask pupils how they could check that they had met the specifications with their glider and for their suggestions to help you to set up the testing zone in your classroom.

This lesson works best if there are one or more testing areas set up. These can be done in advance or you may wish to involve the pupils in their design. The easiest way to set up a test area is to mark out the floor with masking tape so that there is a launch line and a 3m line.

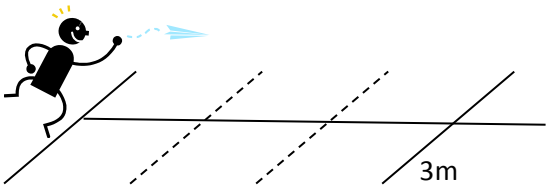

It may be useful to put additional lines in showing each metre and a centre line to help you judge how straight the flight of the glider was. If you are feeling more ambitious you could set up two 1mx1m frames to throw through.

In order to prevent long queues for testing it is worth having space for two or more teams to test their gliders at the same time. In a large classroom it may be possible to set out test areas down the edges of the room. Alternatively it may be worth booking a bigger room to test the gliders. However, it is important that the room is set up so that pupils can easily move back to their tables to make adjustments to their gliders throughout the session, rather than just testing them at the end.

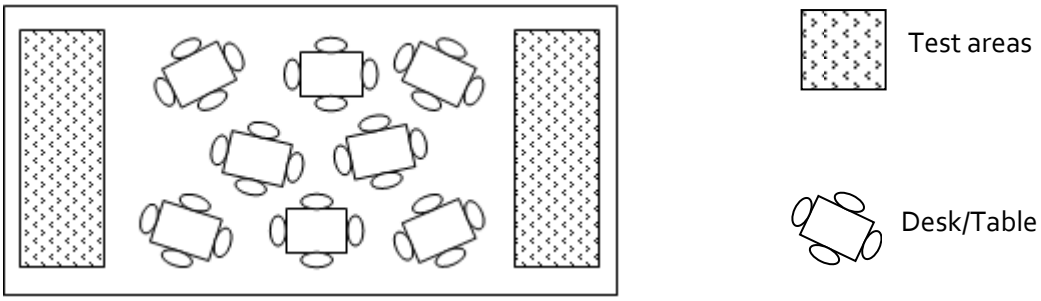

This document is produced under the EC contract No 288989
This work is licensed under a Creative Commons Attribution - NonCommercial 4.0 International License

For lesson 3, you also need to make 4 launchers for the gliders. This allows two teams to be testing while two prepare their gliders for launch. This means that queues are kept to a minimum.

3.2 Demonstrating the launcher – teacher demonstration – 5 minutes

Use a cardboard launcher and an example glider (both prepared in advance) to demonstrate the launching process. Ask the pupils why it is a good idea to use a launcher to test and compare the gliders. All gliders must be capable of being launched using the launcher.

*Tip: The launcher is a useful way to ensure that the pupils don't just solve the problem by throwing things very hard across the gap, but instead have to really think about their glider design. Look carefully at the diagram (**Appendix 6)** and practice using the launcher in advance of the lesson. The launcher allows the launching to be more consistent and introduces the concept of using a 'fair test' to compare different gliders.*

3.3 Making the fuselage – teacher demonstration/small group work – 10 minutes

Split the class into the groups that they will be working in and give each group a fuselage template (**lesson 3 worksheet 2**). Demonstrate how to make the fuselage and allow each group to make their own.

The pupils now create a design for the wings of the glider. More able groups can be asked to develop their own fuselage design too (making sure that it works with the launcher). Other options for more able groups can include flying in a straight line for more than 3m and seeing if the glider can carry packages of more than 10g.

3.4 Designing the glider wings – group discussion/focused recording – 10 minutes

Show the pupils the available materials and emphasise that they do NOT have to use all of them in their design. Ask the pupils to recall what they learned in Lesson 2 about which materials are useful for the wing frame, which are useful for the wing covering and which are useful for attaching the covering to the frame. Encourage them to give reasons for these choices.

Each group works together to plan their glider wing design, using Worksheets 1 to record their ideas. These are the 'imagine' and 'plan' stages of the Engineering Design Process.

Tip: There is a tendency for pupils to want to use both cloth AND plastic for the wing covering, or both straws AND lolly sticks for the frame. Ask them if they need both and to decide which they think is 'better' (e.g lighter).

This document is produced under the EC contract No 288989
This work is licensed under a Creative Commons Attribution - NonCommercial 4.0 International License

3.5 Building and testing the gliders – practical group work – 50 minutes

Allow teams to select their materials and to start to build once they have shown you their completed Worksheet 1. Encourage pupils to stick with their original design, at least until they have tested it. This is the 'create' stage of the Engineering Design Process.

Once each team has built their first design, they need to TEST their model. This is part of the 'improve' stage of the Engineering Design Process. Encourage the pupils to start testing as soon as possible – they don't need to make sure that everything is *perfect* before they do this.

Tip: If necessary stop the class here to encourage pupils to reflect on what they have been doing. It is likely that they are beginning to run into problems because their glider is not balanced properly. Show them the 'see-saw' pictures to help them understand why this matters.

Balancing the glider

Gliders fly best when they are balanced so that their wings (and fuselage) are level .When you launch a glider the wings create LIFT. As the wings are usually at the front of the glider this creates an upwards force near the front which will tend to cause the nose to point upwards .This can be counterbalanced by adding more mass, such as a lump of plasticine, to the nose.

Other common problems and solutions

The glider is too heavy – this is **the** most common problem when building gliders. Not least, because often when things don't work properly pupils will keep adding things on to the glider in the hope that they will make things better.

Glider mass is not well balanced (nose to tail) – the glider either goes straight up then crashes or dives straight into the ground. If the glider goes up first it usually needs more mass at the nose. *Try adding/taking away balls of plasticine from the glider. In the first instance pupils usually need to add quite a bit of plasticine to the nose of the glider. Be careful not to add any more mass than is required.*

Wings are not balanced (wing tip to wing tip) – the glider might twist and fall wing first to the ground or steer round in a circle.
This is usually because the glider wing is heavier on one side. Ideally this is solved by making the glider totally symmetric from the start, but small differences can be corrected by trimming the bigger wing or adding extra mass to the smaller wing. If it is early on in the CREATE stage encourage the team to build and attach a new, more symmetrical set of wings.

Wings are 'floppy'
The fuselage needs to be built of an appropriate material. Some materials, such as cardboard can be made stronger by changing their shape.

It is usually best to build one long wing with a central section that is attached to the fuselage rather than joining two separate wings at the fuselage, as this increases the stiffness of the

This document is produced under the EC contract No 288989
This work is licensed under a Creative Commons Attribution - NonCommercial 4.0 International License

wing (see diagram below). It may also be that the wings are too long, so making them shorter might help.

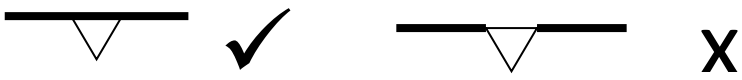

Tip: Encourage the pupils to look carefully at how their glider behaves in the air when they test it. It may be useful to assign a specific member of the team to do this It helps them work out what they need to change in order to improve the design.

3.6 Conclusion – 10 minutes

The class will have carried out preliminary testing. Ask each group to share something that they noticed during testing which led them to change something about their glider design. Use this to emphasise the importance of testing repeatedly as part of the improve stage of the EDP.

Ensure that the gliders are stored safely for 'public' testing in lesson 4

This document is produced under the EC contract No 288989
This work is licensed under a Creative Commons Attribution - NonCommercial 4.0 International License

Lesson 4 – How did we do?
Is the challenge met?

Duration: 90 minutes (or longer depending on the nature of the communication activity)

Objectives, in this lesson the pupils will learn that:

- evaluating their gliders and applying their learning from previous lessons is necessary to understand why their glider did or did not meet the specifications of the challenge;
- they need to consider what they have learned about building a successful glider and how best to communicate that to others.

Resources (for 30 pupils)

- Gliders from previous lesson
- EDP card sort activity (**Lesson 4 Worksheet 1**)
- General class materials for communication activity including **Lesson 4 worksheet 2**

Preparation

- Set up the testing area for whole class glider testing (if not done at the end of Lesson 3)
- Prepare the EDP card sort activity – 1 per pair
- Look out e-mail from Michael and Mary
- Prepare any materials you require for communication activity (4.3)

Working method

- Whole class discussion
- Pair work
- Group work - communication

Key ideas in this lesson

- Anyone who follows the stages of the EDP to meet a challenge or to solve a problem is being an engineer.
- Everything made by humans has involved an engineer at some point and that there are many different types of engineers.
- Engineers who work on things that fly are aeronautic engineers. Aeronautic Engineering is a sub-part of a larger area called Aerospace Engineering, which also includes anything which travels into space (Astronautic Engineering).

Context and background

In this lesson, pupils evaluate how they used the Engineering Design Process to meet the aeronautic engineering challenge of building a glider. The pupils reflect on their work and communicate their discoveries to Michael and Mary. They also find out more about Aeronautic, Aerospace and Astronautic Engineering.

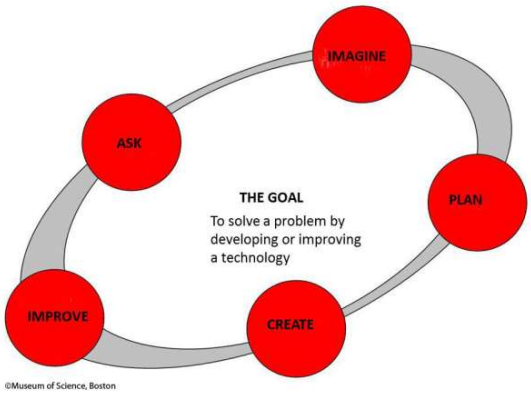

This document is produced under the EC contract No 288989
This work is licensed under a Creative Commons Attribution - NonCommercial 4.0 International License

4.1 Introductory activity – Do the gliders meet the specifications? - whole class glider testing – 30 minutes

Bring the whole class together to test the gliders, one at a time and record whether each glider has met the main specifications of the challenge.

Ask the pupils to identify good features in each other's designs. For example:

- Glider being light
- Quality of build
- Flying very straight
- Aesthetics

Ask each team to suggest what they would change about their design if they were to improve it further, giving reasons for their suggestions.

4.2 Reflecting on achievements – whole class discussion – 10 minutes

Ask pupils the following questions and ask them to explain the reasons for their answers. Pupils can first discuss the questions in pairs or small groups.

- Which was their favourite part of the glider challenge and why?
- What problems did they encounter when making their gliders and how did they overcome them?

4.3 Engineering Design Process card sort activity – pupil pairs - 10 minutes

Use the Engineering Design Process card sorting activity with the class (**Lesson 4 worksheet 1**) to reinforce that they have been working as aeronautic engineers, following the Engineering Design Process to meet the glider challenge set by Michael and Mary.

In this activity pupils work in pairs to sort a set of cards, matching activity descriptions to the five stages of the EDP – ask, imagine, plan, create and improve.

4.4 Communicating to others – group/pairs or individual work – 20 minutes

Read out the email from Mary and Michael (A**ppendix 2)** to remind the pupils that Mary had asked them to send her information about how she and Michael could build their own glider. A vital part of any engineer's job is to be able to communicate to others about how to solve a problem, or to meet a challenge.

Pupils need to work as individuals or in pairs or small groups to create an email that explains to Michael and Mary how to create a glider that they can use in the way they want. **Lesson 4 worksheet 2** will guide them through the process.

- What materials should they use for the different parts of the glider?
- What pictures or photos should they send them to illustrate what a successful glider looks like?
- How should they launch their glider?
- What instructions would they need?

This document is produced under the EC contract No 288989
This work is licensed under a Creative Commons Attribution - NonCommercial 4.0 International License

– What would be their 'top tips' for the construction of the glider?

Tip: If you have more time there is plenty of scope for being creative with this part of the project. For instance the pupils can work together to:

- *Make a poster*
- *Draw a labelled diagram or drawing*
- *Write a set of instructions or 'top tips'*
- *Write a report as if they were working for an engineering company*
- *Create a video/audio recording*
- *Create a strip cartoon*
- *Act out a scenario – e.g an advert or a news report*
- *Create a classroom display*

4.5 Conclusion – plenary - 10 minutes

Ask pupils (or choose individuals to answer):
In which area of engineering have they been engaged as they worked on this challenge?
Would they be interested in working as aeronautic engineers in the future? Why?
What other things might aeronautic engineers work on?

Aeronautic Engineering is part of Aerospace Engineering, which also includes Astronautic Engineering (covers anything which travels into space – see images of more engineers at work in A**ppendix 8**).

Remind the pupils that Engineers solve problems using technology. Almost any object that has been made has had an engineer working on it at some point. Use **appendix 9** as a prompt to discuss other types of engineering.

What type of engineering do they think each of the pictures may represent?
Do any of the pictures surprise them?

Tip: Appendix 9 represents the engineering topics used in the other Engineer project units. If you plan to run other units from the project, you may wish to use this as a link.

This document is produced under the EC contract No 288989
This work is licensed under a Creative Commons Attribution - NonCommercial 4.0 International License

Appendices

Appendix 1: Engineering design cycle

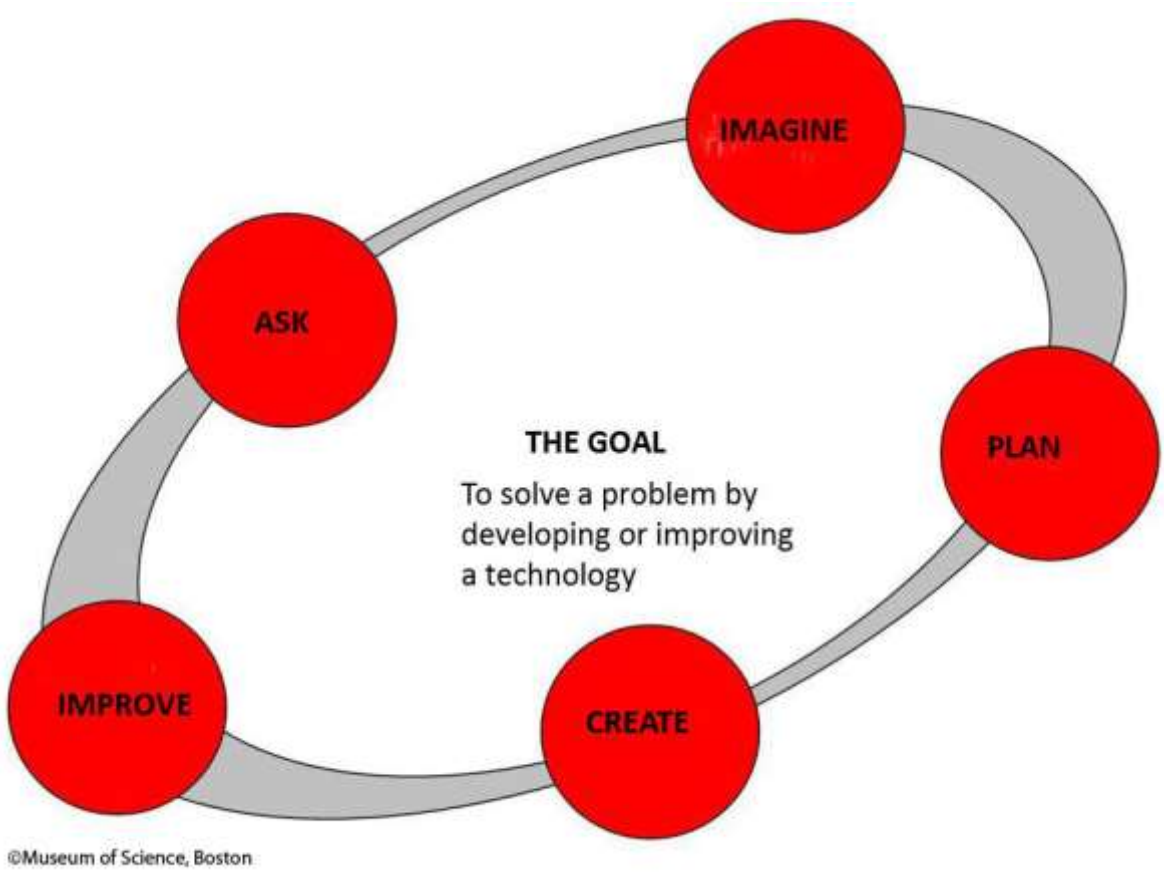

This document is produced under the EC contract No 288989
This work is licensed under a Creative Commons Attribution - NonCommercial 4.0 International License

Appendix 2: Story to set the context

From: **michaelandmary@monotreme.co.uk**
To: **Pegasusyr5**
Subject: Please help us!
Attached: Picture of our street.jpg

Dear Year 5,
Please help us!

Your **head teacher, Mrs Hudson,** suggested that you would be the best people to help us with a problem that we need to solve.

My name is Mary and my bedroom window is opposite my best friend Michael's window. We think it would be fun to build a model glider that can be launched from my window across the path to Michael's bedroom (and for him to be able to send it back to me). That way we can send each other messages and, if we can build the glider well enough, perhaps small gifts.

Can you help us by finding out about gliders and sending us some information for how to build a glider that works? I've attached a picture showing you our houses which might help.
Thanks for all your help,

Mary

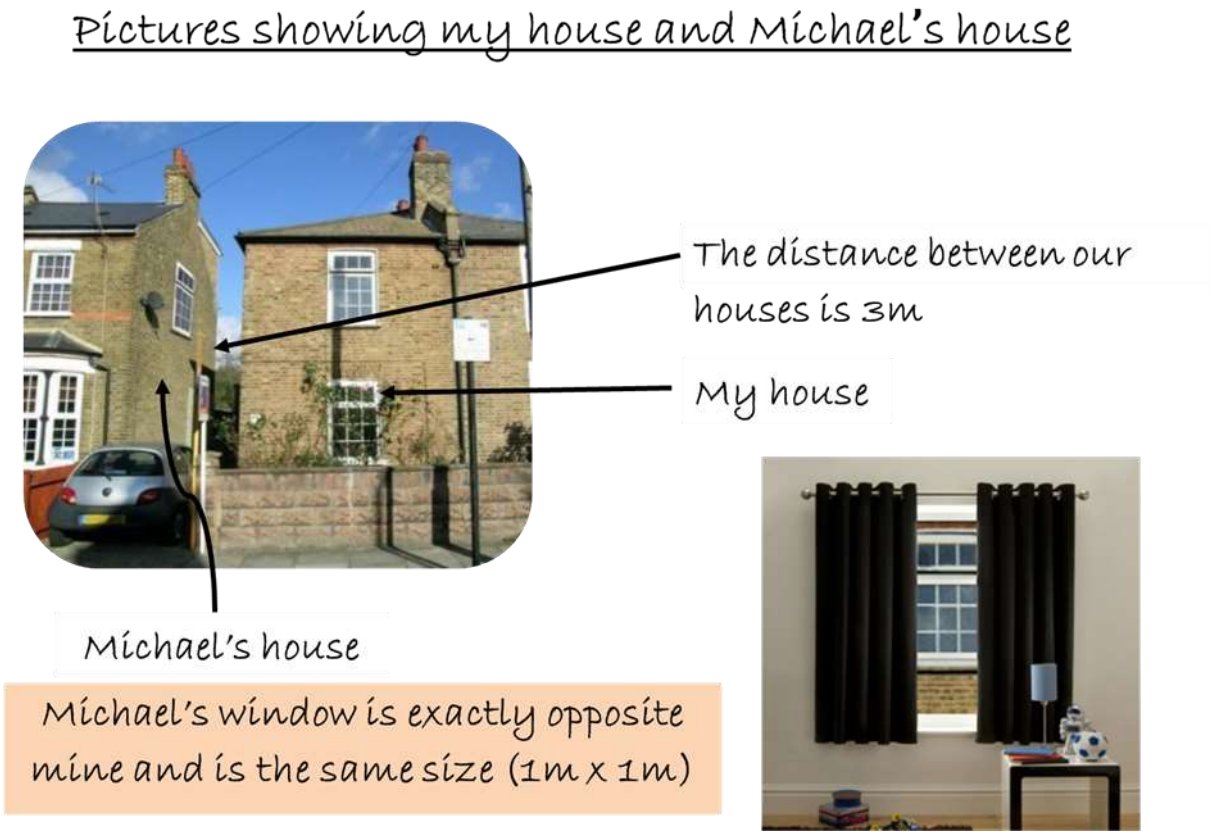

This document is produced under the EC contract No 288989
This work is licensed under a Creative Commons Attribution - NonCommercial 4.0 International License

Appendix 3: Aeroplanes and Gliders

Gliders

Aeroplanes

This document is produced under the EC contract No 288989
This work is licensed under a Creative Commons Attribution - NonCommercial 4.0 International License

Appendix 4: An old plane

This document is produced under the EC contract No 288989
This work is licensed under a Creative Commons Attribution - NonCommercial 4.0 International License

Appendix 5: Making a launcher

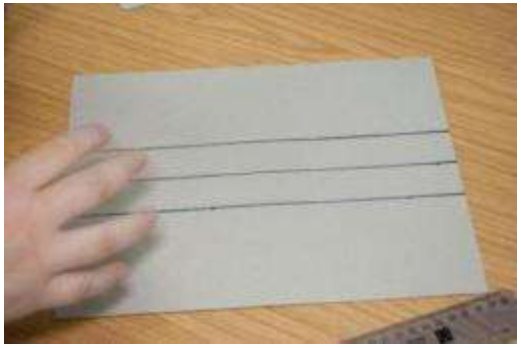

Take a piece of thick card (the ones off the back of A4 pads are good for this) and mark three lines as shown. One down the middle and one approx 3-4cm either side of the central line. Fold the card as shown in the picture. You may find it easier to fold if you score down the lines first with a blade

Make two holes near one end and thread the elastic through the holes. The elastic can be secured at the back of the launcher by using a knot or tying it to something bigger. Reinforce the folds with tape to strengthen them. The finished launcher should look like the final picture.

This document is produced under the EC contract No 288989
This work is licensed under a Creative Commons Attribution - NonCommercial 4.0 International License

Appendix 6: Launching the glider

Using the launcher

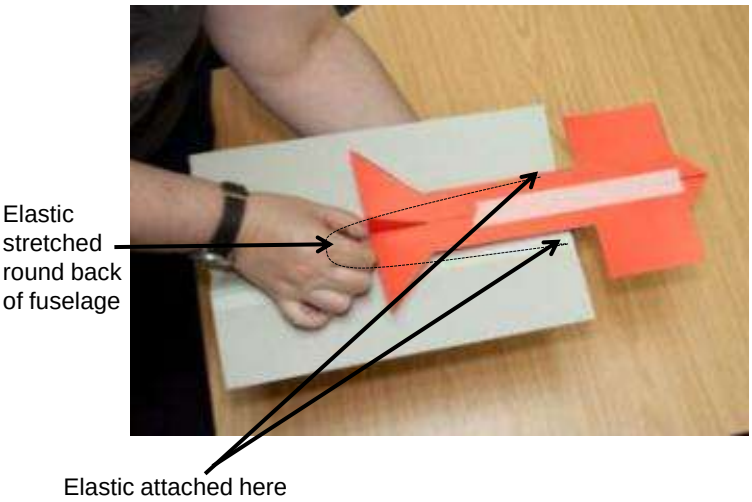

This document is produced under the EC contract No 288989
This work is licensed under a Creative Commons Attribution - NonCommercial 4.0 International License

Appendix 7: The importance of balance

Keeping your balance

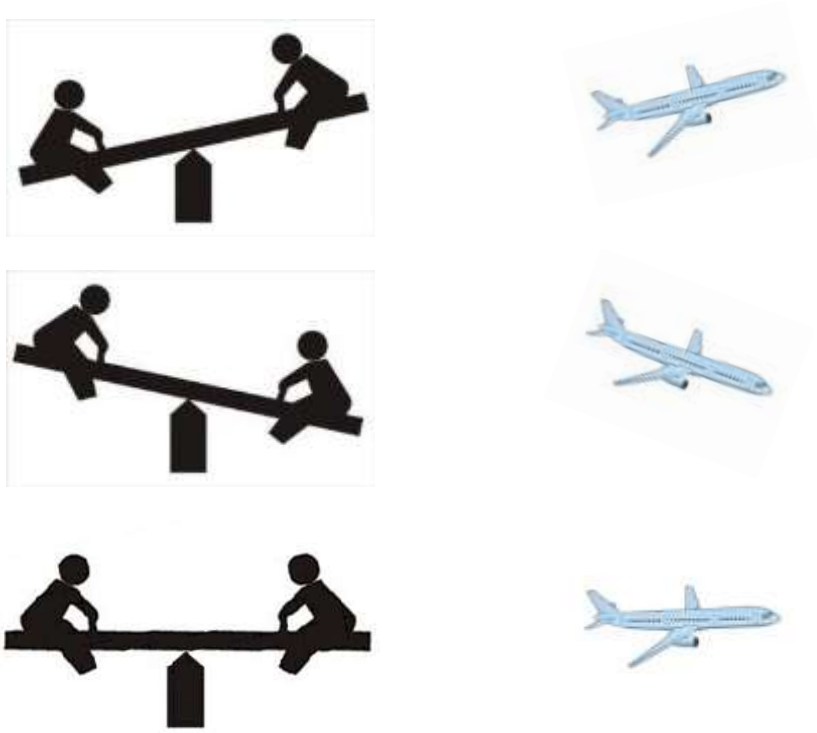

This document is produced under the EC contract No 288989
This work is licensed under a Creative Commons Attribution - NonCommercial 4.0 International License

Appendix 8: Aeronautical and Aerospace Engineers at Work

Charlotte Joyce. UK Aeronautical Engineer. Image used with permission from MOD and WISE

Image used with permission from MOD and WISE

UK Aerospace Engineer working on an instrument (SLSTR) that will be put on a satellite orbiting the Earth and will be used to measure sea and land surface temperatures. SLSTR stands for the Sea and Land Surface Temperature Radiometer.

This document is produced under the EC contract No 288989
This work is licensed under a Creative Commons Attribution - NonCommercial 4.0 International License

NASA Aerospace Engineer inspecting the Hover Test Vehicle after a test (pictured is Chris Boshuizen of NASA Ames Research Center/Logyx)

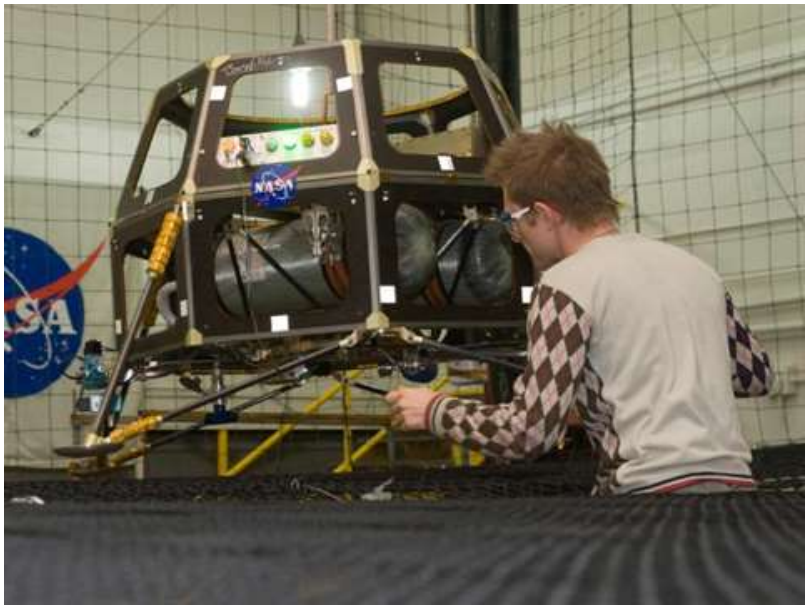

This document is produced under the EC contract No 288989
This work is licensed under a Creative Commons Attribution - NonCommercial 4.0 International License

Appendix 9: Different types of Engineering

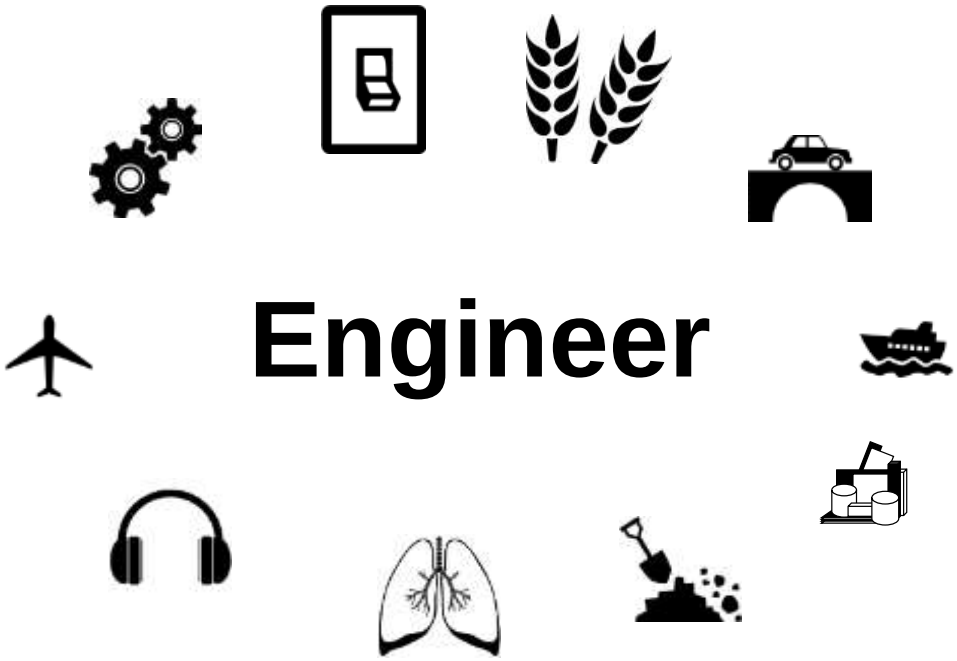

This document is produced under the EC contract No 288989
This work is licensed under a Creative Commons Attribution - NonCommercial 4.0 International License

Worksheets and answer sheets

This document is produced under the EC contract No 288989
This work is licensed under a Creative Commons Attribution - NonCommercial 4.0 International License

Worksheet 1 Lesson 0 – Engineering?

This document is produced under the EC contract No 288989
This work is licensed under a Creative Commons Attribution - NonCommercial 4.0 International License

Worksheet 1 Lesson 0 - Engineering? – Teacher notes

The pictures on the worksheet are intended to promote pupils' discussion about what engineering is, what engineers do and who could be involved in different types of engineering.

The pictures of the spider and snail present some interesting challenges. The pupils could for example, decide that the spider is 'engineering' a web and this could be related to other animal 'engineering' examples (such as a beaver building a dam). An interesting point to make is that it is more common to think of engineering in terms of the made world. We can however, learn from studying nature and the environment. For example, the material that spiders use for making a web has been copied to make a very strong material (Kevlar) that has many useful properties. Similarly, the snail has developed a useful strategy for travelling over rough surfaces to protect its soft body from being damaged. An interesting question is whether this would be useful to solve a problem in the human world (a good example is Velcro which was developed from the burrs of burdock plant).

The toys could be considered engineering since they demonstrate the application of cams but it is interesting to ask what materials they could be made from and who actually makes them. This is likely to lead to some gender issues (many of the class may think that toys are made for children by toy designers who are male).

A similar issue might arise when pupils discuss the knitted garment and the prepared meal - pupils may think that these are only made by women, and that they are not the product of engineering.

Some of the other pictures of sculptures and works of art might be perceived as not engineering and without any real practical purpose. This will raise a question about the links between engineering and art and whether or not a made object needs to have a practical purpose for it to count as being engineering.

The pictures are meant to stimulate engagement and dialogue about engineering. This could lead to a discussion about what is involved in engineering, in which you might choose to introduce the Engineering Design Cycle.

This document is produced under the EC contract No 288989
This work is licensed under a Creative Commons Attribution - NonCommercial 4.0 International License

Worksheet 1 Lesson 1- Glider parts

Name of Engineer:

Date:

Match the parts of a glider to the correct descriptions.

Descriptions	Glider parts
An area where a pilot can sit with a clear cover that allows them to see outside the glider.	Wing
The central part of the glider.	Tail
Helps the glider to fly straight and level, with a rudder that helps the glider to steer.	Cockpit
Creates a force called lift that keeps the plane in the air.	Fuselage

Label the different parts of the glider below

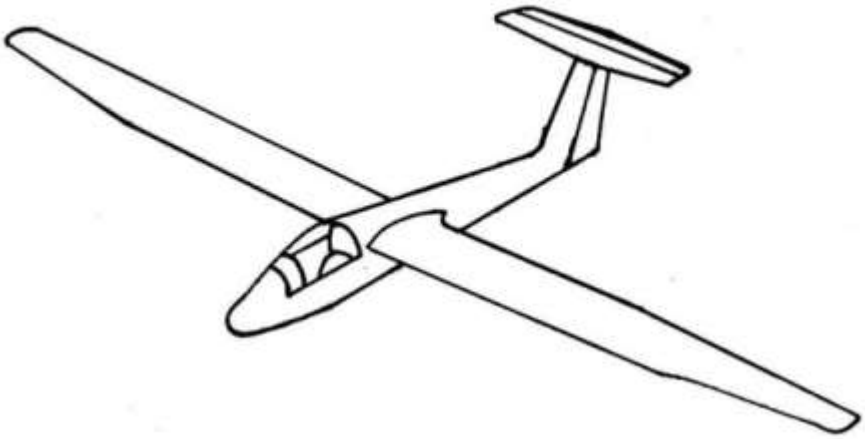

This document is produced under the EC contract No 288989
This work is licensed under a Creative Commons Attribution - NonCommercial 4.0 International License

Answer sheet Worksheet 1 Lesson 1- Glider Parts

Match the parts of a glider to the correct descriptions.

Part of glider	Description
Wing	Creates a force called lift that keeps the plane in the air.
Tail	Helps the glider to fly straight and level, with a rudder that helps the glider to steer.
Cockpit	An area where a pilot can sit with a clear cover that allows them to see outside the glider.
Fuselage	The central part of the glider

Label the different parts of the glider below

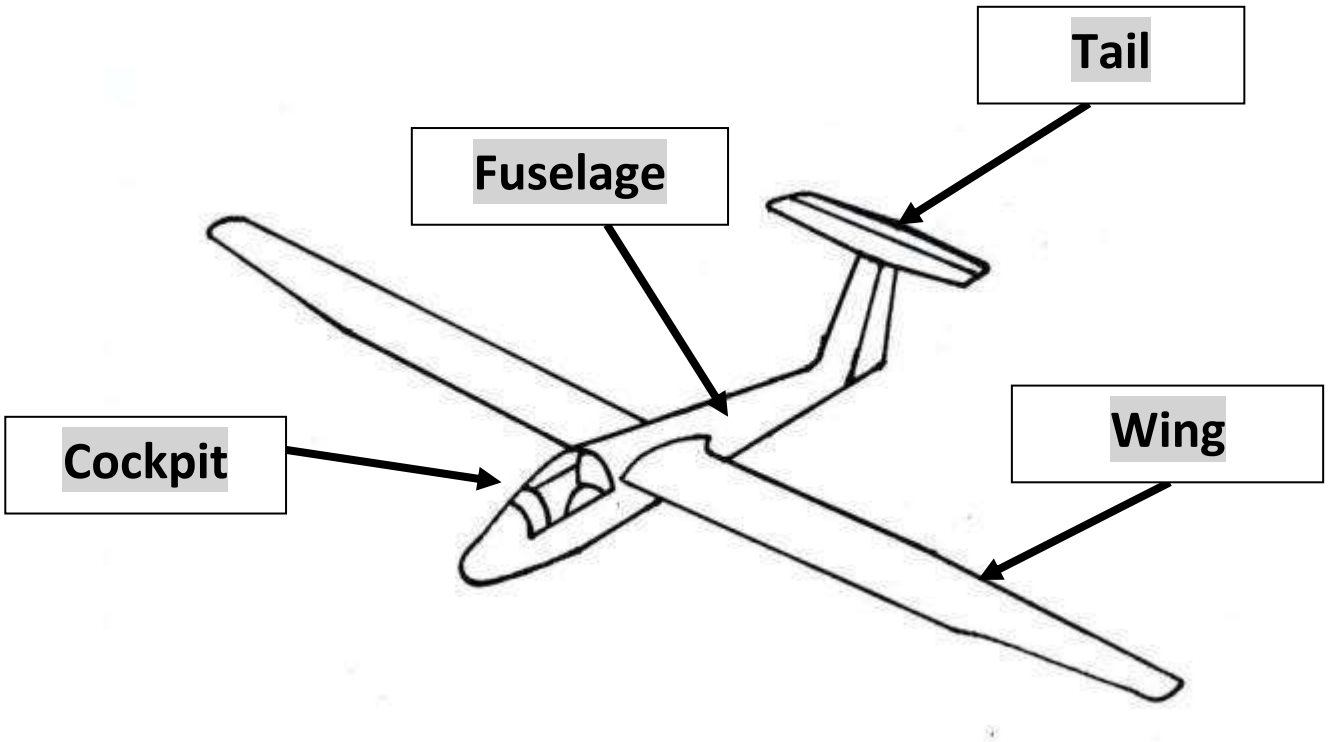

This document is produced under the EC contract No 288989
This work is licensed under a Creative Commons Attribution - NonCommercial 4.0 International License

Worksheet 1 Lesson 2- Changing shape, changing stiffness

Name of Engineer:

Date:

Does changing the shape of a material make it stiffer?

Use 5 sheets of paper and some tape to make the shapes in this picture.

Use the fifth sheet to create your own shape.

Experiment 1

Slowly push each shape so that more than half of it sticks out over the edge of the table. *You may need to hold the other end to stop it falling.*

Stiff materials keep their shape without bending.

Experiment 2

Stand all the pieces of paper up on the table. Do they stand up on their own? What happens if you push down gently on them?

Shape	**Experiment 1** Does the paper hold its shape or does it bend?	**Experiment 2** Does the shape stand up on its own?
 Flat		
 Triangular prism		
 Cylinder		
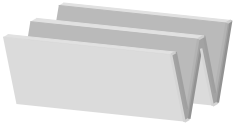 W- shape		
Own shape		

This document is produced under the EC contract No 288989

This work is licensed under a Creative Commons Attribution - NonCommercial 4.0 International License

Worksheet 2 Lesson 2- Sorting Materials

Name of Engineer:

Date:

Explore the materials provided. Which part of the glider wing would they be good for? Use the table below.

Good for the wing frame	Good for wing covering	Good for joining thing together

This document is produced under the EC contract No 288989
This work is licensed under a Creative Commons Attribution - NonCommercial 4.0 International License

Worksheet 1 – Lesson 3 - Planning our glider

Name of Engineer:

Date:

Draw a rough sketch of your glider below and label it

We will build the frame of the wing out of

_____

We will build the wing covering out of

_____

Other things we will do

_____

_____

Material list – we need:

This document is produced under the EC contract No 288989

This work is licensed under a Creative Commons Attribution - NonCommercial 4.0 International License

Worksheet 2 Lesson 3

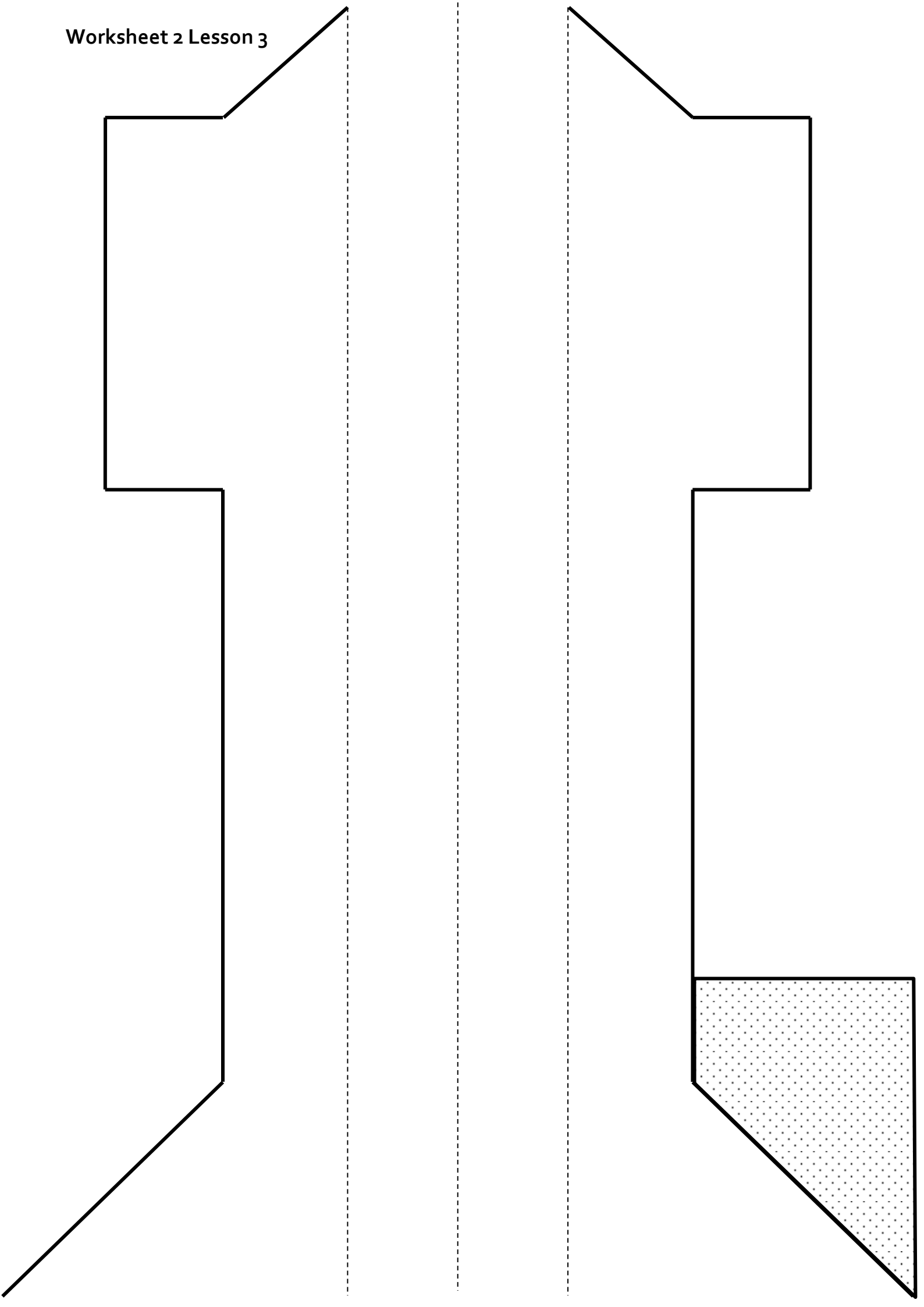

Worksheet 1 Lesson 4- EDP Card Sorting Activity.

Name of Engineer:

Date:

Cut out the descriptions in the table below and sort them into the different stages of the Engineering Design Process

Building a glider	Specifying materials needed to build the glider
Finding out more about how gliders work	Finding out more about different materials
Testing the glider	Discussing ideas
Drawing a plan	Finding out about Mary and Michael's problem
Deciding which ideas was best or combining different ideas	***Can you think of something else you did? Write your own description here***
Looking at the glider tests and using that information to make the glider better	***Can you think of something else you did? Write your own description here***

This document is produced under the EC contract No 288989
This work is licensed under a Creative Commons Attribution - NonCommercial 4.0 International License

Answer Sheet Worksheet 1 Lesson 4- EDP Card Sorting Activity.

Name of Engineer:

Date:

Cut out the descriptions in the table below and sort them into the different stages of the Engineering Design Process

Building a glider **CREATE**	Specifying materials needed to build the glider **PLAN**
Finding out more about how gliders work **ASK**	Finding out more about different materials **ASK**
Testing the glider **IMPROVE/CREATE**	Discussing ideas **IMAGINE**
Drawing a plan **PLAN**	Finding out about Mary and Michael's problem **ASK**
Deciding which ideas was best or combining different ideas **IMAGINE/ PLAN**	
Looking at the glider tests and using that information to make the glider better **IMPROVE**	

This document is produced under the EC contract No 288989
This work is licensed under a Creative Commons Attribution - NonCommercial 4.0 International License

Worksheet 2 Lesson 4 – Reporting back to Michael and Mary

Name of Engineer:

Date:

Photograph or sketch of glider

We used the Engineer Design Process to help us make the glider. The five stages of the Engineer Design Process are:

We found out that in order to fly well gliders should be

_____

The wings of our glider were made of

_____

We chose those materials for the wing because

_____

_____

Our top tips for making a good glider are:

1) _____

2) _____

3) _____

We think the best bit of making the glider was:

This document is produced under the EC contract No 288989
This work is licensed under a Creative Commons Attribution - NonCommercial 4.0 International License

Science notes for teachers about aeronautical engineering

Some key science concepts involved in Lesson 2
• weight is a downwards force that is caused by gravitational attraction between the mass of an object and the mass of the Earth • weight is measured in Newtons • mass is how much 'stuff' (matter) there is in an object and it is measured in grams/kilograms • where 2 forces act on an object, the object will move in the direction of the biggest force • where 2 forces acting on an object are equal and act in opposite directions, the object will either be stationary or moving at constant velocity In considering the forces of lift and weight acting on a glider: • the lift is an upwards force that is generated by generated air movement over wings of a *moving* glider • the weight of the glider is a downward force • if the forces of weight and lift acting on the glider are equal, the glider will move horizontally in a straight line (neither climbing nor falling) • if the downward force is greater than the upwards force, the glider will fall as it moves • if the upwards force is greater than the downwards force, the glider will climb as it moves • wings only help to lift a glider into the air if the glider is moving forward fast enough, because it is the movement of air over an aircraft's wings that is essential to creating lift • gliders must be light in order to reduce the downward force (weight) • gliders must be stiff enough to hold their shape (in order to maintain lift)

This document is produced under the EC contract No 288989
This work is licensed under a Creative Commons Attribution - NonCommercial 4.0 International License

Combining forces

When considering how aircraft fly it is useful to understand what happens when more than one force acts upon an object at the same time. If there is only one force acting on an object, it moves* in the direction of the force. If there are two (or more) forces acting on an object, it moves in a direction that is a combination of the forces (See diagram below).

Object and Forces	Combining Forces	Resultant force	Description
		red arrow = combined force	When only one force acts on an object it moves* in the direction of the force.
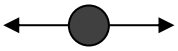		no resultant force	When two forces of the same size act on a stationary object, but are in opposite directions, the forces cancel each other out and there is no resultant force. The object doesn't move.
			When two unequal forces act on an object in opposite directions the direction of the combined, or resultant, force is in the direction of the larger force.
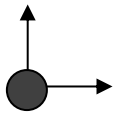			When two forces act in two different non-opposite directions the resultant force and direction is a combination of the two forces.

*Strictly speaking the object ***accelerates*** in the direction of the net force.

Forces involved with flight

Aeronautic engineers are concerned with four main forces when thinking about flight. They are *weight, lift, thrust* and *drag.*

Weight

Weight is a term used by scientists and aeronautic engineers to refer to a *force* that acts towards the centre of the Earth as a consequence of the gravitational attraction between the mass of the object and the mass of the Earth.

Lift

This is any force that acts in an upwards direction on the aircraft and is created by the wings and requires the aircraft to be moving forwards. The forward movement of the plane creates *relative* movement between the air and the wings so there is a constant stream of air passing over and under the plane wings. There are two main factors in the way wings produce lift. One is related to the angle of the wings relative to the airflow (the ***angle of attack***), and the other is related to the aerofoil shape of the wings. The overall effect of the wings is to deflect oncoming air downwards which in turn creates an upwards force on the wings.

This document is produced under the EC contract No 288989
This work is licensed under a Creative Commons Attribution - NonCommercial 4.0 International License

Thrust

This is any force that makes the aircraft move forwards and is responsible for producing the flow of air over the wings that is required for lift. In planes this is usually created by jet engines or propellers. Jet engines work by taking in air surrounding the plane, compressing it, giving it lots of energy via a controlled explosion and then expelling it very fast out of the back of the engine. This sends the plane in the opposite direction. This is similar to the way a balloon moves when it is expelling air from the neck of the balloon. The angles on the blades of propellers are such that they push backwards on the air. This is similar to a swimmer pushing backwards on the water in order to go forwards. In a glider, the thrust is created by the initial launch, usually by use of powered aircraft and winches.

DRAG

This is any force that slows the plane down. Drag is an air resistance force. There are three main causes of drag in planes.

- *The shape of the plane*
  Planes are generally long, thin, and pointed at the end; a bit like a javelin. This shape disturbs the air around it the least. The less the air is disturbed, the less it slows down the plane. Plane shapes are said to be *aerodynamic*. If aeroplanes were much blockier then the air would not be able to move past the shape as easily and the plane would slow down.

- *The roughness of the surface of the plane*
  Air moving past the rough surfaces of a plane causes friction similar to that between two solid surfaces. Modern planes have a smooth surface in order to reduce this force. This also helps reduce the build up of ice.

- *The angle of attack of the wings*
  In order to provide lift, the wings of a plane are usually angled into the direction of the airflow. However, this produces more drag than if the wings were flat. The larger the angle is, the larger the drag.

This document is produced under the EC contract No 288989
This work is licensed under a Creative Commons Attribution - NonCommercial 4.0 International License

Some pupils' ideas about the science of forces and flight

Children's thinking about the natural world comes from their everyday experiences. They may not represent the established current scientific view but they usually contain sensible reasoning based on observation and interaction. Offering opportunities for children to challenge their thinking through activity is more likely to shift their perceptions than telling them facts. However, this presents a significant pedagogical task. It is extremely demanding for learners at all levels and ages to accommodate new ideas about a particular phenomenon, especially when these seem to contradict common sense reasoning. Although through research we have some insight into the ideas pupils are likely to have in particular conceptual domains in science, often, pupils have difficulty in articulating their thinking so there is a need to exercise some caution in making assumptions about their reasoning. This highlights the importance of providing opportunity for children to discuss their thinking.

Mass vs weight

Weight in science refers to a force (the gravitational attraction between an object and the earth) which is measured in Newtons. In conversation however, people using the word weight often actually mean mass. ***Mass*** is a measure of how much 'stuff' there is in an object and is measured in Kilograms. When Astronauts went to the Moon, for instance, their mass stayed the same as the amount of stuff in them was the same. However, their weight decreased. This is because gravity is weaker on the Moon and so the astronauts would have felt a smaller force pulling them towards the Moon surface. As a result they would have found it easier to jump up into the air.

The difficulty of this concept must not be underestimated in teaching and it may be that pupils do not develop a full appreciation of it until later in their education. The teacher will need to use their professional judgement in deciding the appropriateness of this distinction for the pupils they are working with. It has been shown, for instance, that pupils often refer to 'gravity' as the reason why objects travelling in the air fall but they can hold different ideas about gravity itself (1). They often view gravity as a 'pulling down' or 'attractive' force. Others may think of gravity as pushing down on things. They may link gravity with the air and may not associate gravity with weight (or heaviness/mass) of an object. The Nuffield Primary Science Teachers' Guide on Forces (1) provides an interesting example of a pupil's ideas about the forces acting on a glider that shows a sophisticated idea of how:

'The downwards pull of gravity (which stops it going up) is opposed by the upwards push of air under the wings (which stops it coming down)'.

However, the pupil also mentions that 'push that wears off' demonstrating that he/she believes that the initial force that started the movement through the air runs out (that is, the force gets *used up* by the motion of the object as opposed to *acts on* the object). This intuitive view is not scientifically correct.

As forces are an abstract concept and pupils frequently believe that forces *belong to* objects , as opposed to *acting on* them, Lesson 2.1 is an important activity that allows pupils to *feel* the forces acting. They change the size of the forces acting and observe the outcome in a physical way. This experience underpins thinking about forces acting on the glider.

Density vs mass

Pupils are often confused by the difference between density and mass. ***Density*** refers to mass per unit volume. If students are asked to identify something light as a wing covering, they may be inclined to choose a paperclip over a plastic bag because the paperclip is lighter. Generally speaking it may be worth encouraging them to think about things as being 'light for their size' or 'heavy for their size'. In teaching it's important to focus on making the distinction between the material an object is made of and the object itself (in other words, the *plastic* making the plastic bag and the *metal* making the paperclip). So in constructing their glider it's useful to

This document is produced under the EC contract No 288989
This work is licensed under a Creative Commons Attribution - NonCommercial 4.0 International License

choose a material to cover the wing that is 'light for its size' but use something 'heavy for its size' to add mass to the nose of the plane to balance it.

Wind

Pupils may think that planes need to be flying into 'wind' in order for them to fly as wings need air moving over their surface in order to create lift. However, this relative movement between the air and the plane wing is created by the plane moving forward whether it is windy or not. Some pupils give air as a cause for things falling while others see it as keeping things up. Similar comments have been made about wind (1)

The glider

The main focus of Lesson 2 is to create a glider with maximum lift that can travel in a straight line in order to cover a specified distance. This will engage pupils in considering the forces of weight and lift through practical exploration of materials for making the wings of the glider.

References

(1) Nuffield Primary Science Teachers' Guide: Forces and Movement. Ages 7-12. (1995) HarperCollins Publishers: London.

This document is produced under the EC contract No 288989
This work is licensed under a Creative Commons Attribution - NonCommercial 4.0 International License

Partners

Bloomfield science Museum Jerusalem
The National Museum of Science and Technology "Leonardo da Vinci"
Science Centre NEMO
Teknikens hus
Techmania Science Center
Experimentarium
The Eugenides foundation
Condervatoire National des Art et Métiers- muse des arts et métiers
Science Oxford
The Deutsches Museum Bonn
Boston's Museum of Science

Netiv Zvulun – School
Istituto Comprensivo Copernico
Daltonschool Neptunus
Gränsskolan School
The 21st Elementary School
Maglegårdsskolen
The Moraitis school
EE. PU. CHAPTAL
Pegasus Primary School
KGS Donatusschule

ECSITE – European Network of Science Centres and Museums
ICASE – International Council of Associations for Science Education
ARTTIC
Manchester Metropolitan University
University of the West of England

Er zijn 10 lessenseries beschikbaar in deze talen:

The units are available on www.engineer-project.eu until 2015 and on www.scientix.eu

This document is produced under the EC contract No 288989
This work is licensed under a Creative Commons Attribution - NonCommercial 4.0 International License