AD-A096 248

RIA-81-U17

~~AD-E400 496~~
AD-A096 248
Have m/f

CONTRACTOR REPORT ARLCD-CR-80047

A COMPILATION OF HAZARD AND TEST DATA FOR PYROTECHNIC COMPOSITIONS

By
Fred L. McIntyre
Computer Sciences Corporation
NSTL Station, MS 39529

TECHNICAL
LIBRARY

PROJECT LEADER
Richard M. Rindner
ARRADCOM

October 1980

US ARMY ARMAMENT RESEARCH AND DEVELOPMENT COMMAND
LARGE CALIBER WEAPON SYSTEMS LABORATORY
DOVER, NEW JERSEY

1/14/80

Approved for public release, distribution unlimited.

The views, opinions, and/or findings contained in this report are those of the author(s) and should not be construed as an official Department of the Army position, policy, or decision, unless so designated by other documentation.

Destroy this report when no longer needed. Do not return to the originator.

UNCLASSIFIED

SECURITY CLASSIFICATION OF THIS PAGE (When Data Entered)

REPORT DOCUMENTATION PAGE		READ INSTRUCTIONS BEFORE COMPLETING FORM
1. REPORT NUMBER ARLCD-CR-80047	2. GOVT ACCESSION NO.	3. RECIPIENT'S CATALOG NUMBER
4. TITLE (and Subtitle) A Compilation of Hazard Test Data for Pyrotechnic Compositions		5. TYPE OF REPORT & PERIOD COVERED Final January 1969-March 1979 6. PERFORMING ORG. REPORT NUMBER
7. AUTHOR(s) F. L. McIntyre, Computer Sciences Corp. R. M. Rindner, Project Leader, ARRADCOM		8. CONTRACT OR GRANT NUMBER(s) MIPR 83110100
9. PERFORMING ORGANIZATION NAME AND ADDRESS Technical Services Laboratory, Computer Sci. Corp. NASA National Space Technology Laboratories NSTL Station, MS 39529		10. PROGRAM ELEMENT, PROJECT, TASK AREA & WORK UNIT NUMBERS ARRADCOM Project 5784289
11. CONTROLLING OFFICE NAME AND ADDRESS ARRADCOM, TSD STINFO Division (DRDAR-TSS) Dover, NJ 07801		12. REPORT DATE 13. NUMBER OF PAGES 390
14. MONITORING AGENCY NAME & ADDRESS(if different from Controlling Office) ARRADCOM, LCWSL Energetic Systems Processing Div. (DRDAR-LCM-SP) Dover, NJ 07801		15. SECURITY CLASS. (of this report) Unclassified 15a. DECLASSIFICATION/DOWNGRADING SCHEDULE

16. DISTRIBUTION STATEMENT (of this Report)

Approved for public release, distribution unlimited

17. DISTRIBUTION STATEMENT (of the abstract entered in Block 20, if different from Report)

18. SUPPLEMENTARY NOTES

19. KEY WORDS (Continue on reverse side if necessary and identify by block number)

Initiators	Sound	Mass Effects	Classification
Illuminants	Heat Producers	Mixing Blending	
Smokes	Delay	Incident/Accident Anal.	
Gas Producers	End Item Tests	Dust Sensitivity	

20. ABSTRACT (Continue on reverse side if necessary and identify by block number)

This report is a compilation of parametric, stability, sensitivity, and output data on selected pyrotechnic compositions derived from hazards evaluation and classification testing. Additional results of manufacturing processes and process equipment were studied, and the results of an incident/accident survey are included in this report. This report provides a readily accessible source of data for some 180 pyrotechnic compositions.

DD FORM 1 JAN 73 1473 EDITION OF 1 NOV 65 IS OBSOLETE

UNCLASSIFIED

SECURITY CLASSIFICATION OF THIS PAGE (When Data Entered)

FOREWORD

The ARRADCOM Resident Operation Office at NSTL Station, MS, compiled all of the pyrotechnic test data that have been performed by this test agency and others covering a period from 1969 to 1976. The report was written for the Energetic Systems Process Division, ARRADCOM, Dover, New Jersey, under the overall program entitled "Safety Engineering in Support of Ammunition Plants."

ACKNOWLEDGEMENTS

The author wishes to acknowledge the technical assistance of D. M. Koger and Dr. G. L. McKown of the ARRADCOM Resident Operations Office at NSTL for their assistance, Mr. W. P. Henderson of the Chemical Systems Laboratory, Aberdeen Proving Grounds, for his technical guidance during the many phases of the test and evaluation programs, and D. Satrianni and R. Rindner of the Energetic Systems Process Division for their encouragement and technical guidance.

SUMMARY

This report is a compilation of parametric, stability, sensitivity and output data on selected pyrotechnic mixtures derived from hazards evaluation studies and classification tests. In addition to these tests, certain manufacturing processes and process equipment were studied and are reported in this document. This report also includes the results of an incident/accident survey that was conducted on the life cycles of pyrotechnic compositions. This report provides a readily accessible source of available data on some 180 pyrotechnic mixtures which may be utilized by cognizant engineering and safety organizations. A summary of the compiled data by group is shown in the table below.

		Initiators	Illuminants	Smokes	Gas	Sound	Heat	Time
Autoignition temperature	°C	255 ± 96	497 ± 123	180 ± 66	162 ± 16	506 ± 169	447 ± 199	448 ± 159
Decomposition temperature	°C	277 ± 102	561 ± 135	205 ± 75	182 ± 24	550 ± 168	505 ± 224	517 ± 153
Density (bulk)	g/m^3	-	0.98 ± 0.31	0.85 ± 0.23	1.39 ± 0.42	0.98 ± 0.42	1.31 ± 0.49	2.02 ± 0.45
Density (loading)	g/m^3	1.71 ± 0.55	2.21 ± 0.59	1.61 ± 0.27	1.48 ± 0.27	-	-	3.62 ± 0.82
Fuel/oxidizer ratio	x:1	1.16 ± 1.8	0.68 ± 0.47	0.65 ± 0.6	0.66 ± 0.24	0.83 ± 0.46	0.81 ± 0.5	0.76 ± 1.33
Gas Volume	ml/g	30 ± 59	52 ± 21	23 ± 5	-	85 ± 67	27 ± 17	8.2 ± 6.8
Heat of combustion	cal/g	2619 ± 623	2728 ± 1514	2794 ± 887	2261 ± 1104	2666 ± 789	1746 ± 1198	682 ± 222
Heat of reaction	cal/g	-	1475 ± 287	983 ± 319	-	933 ± 112	830 ± 495	299 ± 101
Hygroscopicity	95%	Poor	Poor to good	Good	Good	Good	Good	Poor
Vacuum stability	ml/gas/40 hr	0.21 ± 0.11	0.27 ± 0.13	0.06 ± 0.16	-	0.2 ± 0.07	0.11 ± 0.07	0.11 ± 0.05
Thermal stability	75° C	Good	Good	Good	Good	Good	Good	Good
Card gap test results		-	N.D.	N.D.	N.D.	N.D.	N.D.	N.D.
Detonation test results		-	Mush	N.D.	N.D.	Mush	Burning	Burning
Electrical spark	Joules	0.038 ± 0.02	33 ± 23	10.5 ± 19.8	13 ± 25	0.6 ± 0.4	1.72 ± 2.55	0.80 ± 1.04
Friction (steel shoe)		Sens	Sens	Insens	Insens	Sens	Insens	Sens
Ignition & unconfined burning		No Expl.	No Expl.	No Expl.	No Expl.	No Expl.	No Expl.	No Expl.
Impact sensitivity	cm (in)	3.75	12 ± 5	14 ± 4	11 ± 6	7 ± 3	12 ± 4	18 ± 6
Burn time	sec/cm	-	1.75 ± 1.49	4.79 ± 2.41	2.84 ± 2.8	0.39 ± 0.35	2.13 ± 2.19	1.58 ± 2.14
TNT equivalency	%	-	25 ± 19	6 ± 2	16 ± 16	63 ± 25	18 ± 10	1

TABLE OF CONTENTS

TITLE	PAGE
INTRODUCTION	15
Background	15
Objective	15
TEST METHODS	17
Philosophy of Testing	17
Parametric Tests	17
Stability Tests	22
Sensitivity Tests	26
Output Tests	38
Performance Tests	42
CLASSIFICATION AND COMPATIBILITY	45
Background	45
Classification of a Bulk Material	45
End Item Classification	46
Compatibility	47
PYROTECHNIC SYSTEMS	49
INITIATORS - PRIMERS/DETONATORS	55
Background	55
Stab Primers	56
Percussion Primers	57
Friction Primers	57
Non-Electric Detonators	58
Electrical Detonators	58
Data Discussion	59
Summary	65
ILLUMINANTS	67
Background	67
Data Discussion	72
Summary	84

TABLE OF CONTENTS (CONT'D.)

TITLE	PAGE
SMOKES	87
Data Discussion	88
Summary	98
GAS	101
Data Discussion	103
Summary	105
SOUND	107
Data Discussion	108
Summary	111
HEAT	113
Data Discussion	116
Summary	123
TIME	127
Data Discussion	129
Summary	136
SUMMARY OF BULK TESTING	139
END ITEM TESTS	145
Background	145
Data Discussion	150
Summary	157
MASS EFFECTS	159
Background	159
Test Set Up	159
Summary	165
MIXING/BLENDING	167
Background	167
Data Discussion	175
Summary	184
DUST EXPLOSIONS	187
Background	187
Data Discussion	191

TABLE OF CONTENTS (CONT'D.)

TITLE	PAGE
Summary	195
INCIDENT/ACCIDENT ANALYSIS	197
Background	197
Results	198
Summary	201
REFERENCES	205
APPENDIX A - DATA SHEETS	209

LIST OF TABLES

TABLE NO.	TITLE	PAGE
1	A Comparison of Some of the Characteristics of Pyrotechnics, Propellants, and Explosives	49
2	Functional Grouping of Pyrotechnic Mixtures	53
3	Typical Stab Primer Formulations	60
4	Summary of Parametric, Stability and Sensitivity Data for Stab Primers	61
5	Typical Percussion Primer Formulations	62
6	Summary of Barometric, Stability, and Sensitivity Data for Percussion Primers	63
7	Typical Electrical Primer Formulations	63
8	Summary of Parametric, Stability, and Sensitivity Data for Electric Primers	64
9	Typical Friction Primer Formulations	64
10	Summary of Parametric, Stability, and Sensitivity Data for Friction Primers	65
11	Comparison of Summary of Results for Initiating Devices	66
12	Typical Green Flare/Star Formulations	73
13	Summary of Parametric, Stability and Sensitivity of Green Flares/Stars	74
14	Typical Red Flare/Star Formulations	75
15	Summary of Parametric, Stability and Sensitivity Data for Red Flares/Stars	76
16	Typical Yellow Flare/Star Formulations	76

TABLE OF CONTENTS (CONT'D.)

LIST OF TABLES (CONT'D.)

TABLE NO.	TITLE	PAGE
17	Summary of Parametric, Stability and Sensitivity Data for Yellow Flare/Star	77
18	Typical White Flare/Star Formulations	78
19	Summary of Parametric, Stability and Sensitivity Data for White Flare/Star	79
20	Typical Photoflash Mixture Formulations	80
21	Summary of Parametric, Stability and Sensitivity Data for Photoflash Mixtures	81
22	Typical Tracer, Tracer Igniter and Dim Igniter Formulations	82
23	Summary of Parametric, Stability and Sensitivity Data for Tracer and Tracer Igniter Mixtures	83
24	Comparison of Summary of Results for Illuminants	84
25	Typical Screening Smoke Formulations	89
26	Summary of Parametric, Stability and Sensitivity Data for Screening Smokes	90
27	Typical Green Smoke Formulations	91
28	Summary of Parametric, Stability and Sensitivity Data for Green Smokes	92
29	Typical Red Smoke Formulations	93
30	Summary of Parametric, Stability and Sensitivity Data for Red Smoke	94
31	Typical Yellow Smoke Formulations	94
32	Summary of Parametric, Stability and Sensitivity Data for Yellow Smoke	95
33	Typical Violet Smoke Formulations	96
34	Summary of Parametric, Stability and Sensitivity Data for Violet Smoke	97
35	Comparison of Summary of Results for Smoke Mixtures	99
36	Typical Gas Producing Formulations	103
37	Summary of Parametric, Stability and Sensitivity Data for Gas Producers	104
38	Summary of Gas Producing Mixtures	105
39	Typical Sound Producing Formulations	109

TABLE OF CONTENTS (CONT'D.)

LIST OF TABLES (CONT'D.)

TABLE NO.	TITLE	PAGE
40	Summary of Parametric, Stability and Sensitivity Data for Sound Producers	110
41	Summary of Sound Producers	111
42	Typical First Fire Mixture Formulations	116
43	Summary of Parametric, Stability and Sensitivity Data for First Fire Mixtures	117
44	Typical Fuel Mixture Formulations	118
45	Summary of Parametric, Stability and Sensitivity Data for Typical Fuel Mixtures	119
46	Typical Ignition Mixture Formulations	120
47	Summary of Parametric, Stability and Sensitivity Data for Ignition Mixtures	121
48	Typical Starter Mixture Formulation	122
49	Summary of Parametric, Stability and Sensitivity Data for Starter Mixtures	123
50	Comparison of Results for Heat Producers	124
51	Typical Red Lead/Silicon Delay Mixture Formulations	129
52	Summary of Parametric, Stability Sensitivity and Output Data for Red Lead/Silicon Delay Mixtures	130
53	Typical Boron/Barium Chromate Delay Mixture Formulations	131
54	Summary of Parametric, Stability and Sensitivity Data for Boron/Barium Chromate Mixtures	131
55	Typical Tungsten Delay Mixture Formulations	132
56	Summary of Parametric, Sensitivity and Stability of Various Tungsten Delay Mixtures	133
57	Typical Manganese/Barium Chromate Delay Mixture Formulations	133
58	Summary of Parametric, Stability, Sensitivity and Output Data for Manganese/Barium Chromate Delay Mixtures	134
59	Typical Zirconium-Nickel Alloy/Barium Chromate Delay Mixture Formulations	135
60	Summary of Parametric, Stability and Sensitivity of Zirconium-Nickel/Barium Chromate Delay Mixtures	135
61	Summary of Results for Delay Mixtures	136
62	Summary of Test Results by Groups	140

TABLE OF CONTENTS (CONT'D.)

LIST OF TABLES (CONT'D.)

TABLE NO.	TITLE	PAGE
63	Summary of Detonation Test A	151
64	Summary of Detonation Test B	152
65	Modified Detonation Test B Results	153
66	External Heat Test C Results	154
67	Rail Car Simulation Test Summary of Results	155
68	Bullet Impact Test Summary	156
69	Data Summary of 22.6 kg (50 lb) of Illuminant and Violet Smoke Mixtures	161
70	Blast Overpressure of 22.6 kg (50 lb) of Illuminant and Violet Smoke Mixtures Boosted by .226 kg (0.5 lb) Composition C-4	161
71	Results of Thermal Ignition Tests	163
72	Mass Effects Test Results	164
73	Effects of Induced Frictional Stimuli on Pyrotechnic Mixtures During Tumble-Blending in a Ball Mill	176
74	Effects of Metal-to-Metal Contact on Pyrotechnic Mixtures During Blending in a Planetary Blender	176
75	Electrostatic Measurements of Constituents and Complete HC Mixture in a 1-Liter Airmix Mixer	177
76	Full-Scale Blending Test Energy Levels	178
77	Electrostatic Measurements of Constituents and Complete Violet Smoke Mixture	179
78	Full-Scale Blending Electrostatic Charge Generation	180
79	Electrostatic Energy Generated During Blending of Violet Smoke IV Drawing No. B143-5-1 in the Double Cone Mixer	180
80	Pilot Model WSG15 Blending Electrostatic Charge Generation	181
81	Full-Scale Model WSG300 Blending Electrostatic Charge Generation (Average Charge Generated for Two Blending Cycles)	181
82	Results of Full-Scale Burn Tests	182
83	Results of Full-Scale Suppression Tests	184
84	Hartmann Test Results	192

TABLE OF CONTENTS (CONT'D.)

LIST OF TABLES (CONT'D.)

TABLE NO.	TITLE	PAGE
85	Extended Hartmann Results Reaction Propagation Velocities	193
86	Summary of Fire Suppression Test Data	194
87	Vertical Dust Gallery Tests	195
88	Summary of Type Incidents	197
89	Summary of Severity of Incidents/Accidents	197
90	Summary of Injuries and Fatalities of Pyrotechnic Incidents/Accidents from 1970 to 1976	198
91	Summary of Source of Initiation	199
92	Summary of Types of Pyrotechnic Mixtures	201
93	Operation Versus Type Incident, Severity, Stimulus for Pyrotechnic Incident/Accident from 1950 to 1976	202
94	Summary of Contributory Factors	203

LIST OF ILLUSTRATIONS

FIGURE NO.	TITLE	PAGE
1	A Typical Differential Thermal Analyzer Apparatus	19
2	A Typical Gas Volume Measurement	20
3	Parr Bomb Calorimeter Apparatus	21
4	Typical Thermal Stability Test Set Up	24
5	Vacuum Stability Test Set Up	25
6	Weight Loss Test Set Up	26
7	TB 700-2 Card Gap Test Configuration	27
8	Detonation Test Configuration	28
9	Electrical Spark Sensitivity Test Set Up	29
10	Hartmann Apparatus Schematic	31
11	Friction Pendulum Test Apparatus	32
12	Rotary Friction Apparatus	33
13	Test Configuration (Single Cube)	34
14	Test Configuration (Multiple Cube)	34
15	Bureau of Explosives Impact Apparatus	35

TABLE OF CONTENTS (CONT'D.)

LIST OF ILLUSTRATIONS (CONT'D.)

FIGURE NO.	TITLE	PAGE
16	Bureau of Mines Impact Apparatus	36
17	Picatinny Impact Apparatus	37
18	Critical Diameter Test Set Up	39
19	Critical Height to Explosion Test Set Up	40
20	Pipe Bomb Configuration TNT Equivalency	41
21	Typical Charge Placement for Equivalency Tests	42
22	Instrumentation Placement for TNT Equivalency	43
23	Interpretation of Results per TB 700-2	45
24	Interpretation of End Item Test Results per TB 700-2	47
25	Profile of Reaction Process for Pyrotechnic Reactions	50
26	Typical Pyrotechnic Mixture (not shown in proportion of any specific mixture)	51
27	M55 Stab Detonator	56
28	M42 Percussion Primer	57
29	Typical Non-Electric Detonator	58
30	Typical Electrical Initiating Devices	59
31	Typical Electrical Squib	59
32	A Typical Parchute Flare	69
33	A M48A1 Trip Flare	69
34	A Signal, Distress, Two Star, Red AN-M75	69
35	Typical Photoflash Cartridge	70
36	NATO 7.62 mm Tracer Ball	71
37	A Typical Spotting Tracer Cal. 50 M48A1	72
38	Armor-Piercing Tracer	72
39	HC Smoke Pot, Mk 3 Mod 0	87
40	WP Smoke Grenade	88
41	HC Smoke Hand Grenade, AN-M8	88
42	M-18 Colored Smoke Grenade	89
43	Gas Generator	101
44	Gas Operated Initiation MK 10 Mod 0	101

TABLE OF CONTENTS (CONT'D.)

LIST OF ILLUSTRATIONS (CONT'D.)

FIGURE NO.	TITLE	PAGE
45	Rocket Expulsion Charge	102
46	CN Riot Hand Grenade, M25A1	102
47	Projectile Airburst Simulator, M74A1	107
48	M80 Firecracker	108
49	Whistling Booby Trap Simulator, M119	108
50	Projectile Ground Burst Simulator, M115	108
51	Typical Pyrotechnic Fuze Train	114
52	Typical Cal 0.50 Incendiary Bullet	115
53	Typical Incendiary Grenade	115
54	Relationship of Delay Element in a Simple Fuze Train	127
55	A Vented Delay Column	128
56	Delay Element, Obturated, M9	128
57	DTA Results for Colored Smoke Based Upon Applied Heat Rate	140
58	Interpretation of End Item Test Results in Accordance with TB700-2	145
59	Typical Detonation Test A Setup	146
60	Typical Detonation Test B Configuration	147
61	Modified Detonation Test B	147
62	Typical External Heat Test C	148
63	Typical Bullet Impact Test Set Up	149
64	Test Setup of Self-Confinement Test Showing Placement of Internal Velocity Measurement Devices and Placement of the Booster Charge	160
65	Typical Test Configuration for Thermal Ignition of 226.7 kg (500 pound), 454 kg (1000 pound) and 984 kg (2170 pound) Quantities of Violet Smoke and HC White Smoke	162
66	Reaction Rate of Violet Smoke as a Function of Charge Weight	164
67	Typical Set Up for Detonation Susceptibility Tests	164
68	Simple Flow Diagram of Prepreparation for Dry Blending	168

TABLE OF CONTENTS (CONT'D.)

LIST OF ILLUSTRATIONS (CONT'D.)

FIGURE NO.	TITLE	PAGE
69	A Typical Hobart Planetary Dough Mixer	169
70	Tumble Mill Blender Test Configuration	170
71	Model N-50-G Hobart Mixer	170
72	Ball Mill Container Configuration	171
73	Typical Foreign Objects Used in Blending Experiments	172
74	One-Liter Airmix Blender Set Up	172
75	Test Set Up for Electrostatic Measurements and Full-Scale Thermal Initiation Test	173
76	Electrostatic Measurement of Double Cone Blender	174
77	Fluid Bed Spray Granulation Electrostatic Measurements Set Up	174
78	Experimental Test Set Up for a Thermal Ignition in Modified Mixer with Suppression System	175
79	Nomograph of Electrostatic Charge Generation During Mixing, Granulating and Drying in Pilot and Full-Scale Fluid Bed Spray Granulation Process	183
80	Initiation-Communication-Transition Phenomenon of a Typical Dust Explosion	187
81	Schematic of a Typical Hartmann Chamber	188
82	Extended Tube Hartmann Apparatus	189
83	Plan Layout of Horizontal Dust Gallery	190
84	Plan Views of Vertical Dust Gallery	191
85	Test No. 47-5-01 Halon Suppressant	194
86	Test No. 48-5-01 Water Suppressant	194
87	Typical Reaming Operation	199
88	Typical Pressing Operations	200

INTRODUCTION

BACKGROUND

The continually increasing sophistication of ordnance items of all types, specifically pyrotechnics, coupled with a need to accommodate expanding production requirements with maximum safety with minimum costs, posed a severe challenge to pyrotechnic manufacturing. It was recognized that the safety criteria that had been applied to pyrotechnics needed reevaluation and that existing concepts relating to pyrotechnic hazards, as compared to the procedures and controls for propellants and explosives, were not totally satisfactory. It was also recognized that the state-of-the-art developments in pyrotechnics were making great strides that were not matched by similar progress in safety criteria and procedures.

Since these problems were recognized, the Edgewood Arsenal Chemical Process Laboratory and Picatinny Arsenal Pyrotechnics Laboratory, under the auspices of the Army Arsenal Modernization Project PEMA # 5744099, began a joint effort in 1969 to investigate problems as they relate to pyrotechnics. Edgewood Arsenal Chemical Process Laboratory was primarily responsible for colored smokes, gas and heat producing compositions; and Picatinny Arsenal was responsible for illuminants, sound, heat, and delay compositions. Initially, tests were conducted to provide hazards classification test data for bulk pyrotechnic mixtures and end items. Once this was accomplished, the test procedures used in classification and hazards evaluation were evaluated as to their applicability to pyrotechnics in order to make recommendations for changes to the existing classification documents and safety procedures. The final phase of this joint venture, which concluded in 1976, was to investigate specific problems associated with manufacturing processes.

This joint effort generated large amounts of data on sensitivity and the hazards classification data of bulk mixtures and end items. Other determinations, such as parametric, stability, and output data were also generated as part of this program. Some data were published sporadically in various reports, but the majority of the data remained uncompiled.

ARRADCOM Engineering System Process Division under Project 5784289 funded the work required to compile, analyze, and publish this material. In addition to the compilation of data, a series of dust hazards tests were to be conducted to evaluate the dust hazards during pyrotechnic material handling, investigate the effect of dust control additives to reduce these hazards, and conduct tests to evaluate propagation of a deflagration through dust suspension in simulated processing scenarios.

OBJECTIVE

The objective of this report, therefore, is to compile all readily available parametric, stability, sensitivity, and output data for pyrotechnic mixtures, and report them in a consistent format which is easily accessible and provides a comprehensive and ready reference for engineers, safety analysts, project leaders, and manufacturing personnel.

TEST METHODS

PHILOSOPHY OF TESTING

Within the explosives, propellant, and pyrotechnic industry, it has been recognized that the end product, when consumed, has a high energy yield over a short duration, or when misused, represents a hazard. To facilitate safe consumption of the end product or the prevention of potential hazards during the life cycle require stringent safety measures. These safety measures are the culmination of empirical data, intuitive judgement, and common sense derived from usage, laboratory studies, testing, and accident/incident investigations. The input from each of these sources strengthens our knowledge of hazardous materials. For obvious reasons the most desirable methods of obtaining knowledge are from testing.

Baker[1] contends that each test method establishes parameters, and the relationship of the parameters, in turn, provide scalability, classification, and correlation between various test methods to provide predictable results for a given set of conditions. Therefore, all tests of the safety of a hazardous material are relative. The particular test employed is a matter of convenience and economics. Emphasis must be placed upon the desired results rather than just gaining additional data. It may also be noted that no test is a failure, for knowledge is gained even though the desired results may not have been obtained.

Usually, test methods are devised to evaluate test specimens for classification, stability, compatibility, hazards evaluation, and risk analysis. For this publication they are subdivided into the following categories: (1) Parametric, (2) Stability, (3) Sensitivity, (4) Output, and (5) Application and Acceptance. The combined test results establish the explosive, physical, and chemical characteristics of a given material.

PARAMETRIC TESTS

Parametric tests determine the physical, chemical and mechanical properties of a given material. Parametric tests are usually associated with the development phase of the life cycle of the material and may include some sensitivity, output, and stability tests. Parametric studies are generally considered laboratory type tests. The results of such tests are of primary importance to the developer who determines if the results warrant further consideration for development. The results may or may not be used in the ultimate determination of compatibility or classification.

The following tests are included in the parametric tests:

1. Autoignition Temperature
2. Decomposition Temperature
3. Density (Apparent Bulk Density) and Loading Density
4. Gas Volume
5. Heat of Combustion
6. Heat of Reaction

Additionally, the fuel oxidizer ratio is reported under the parametric data to indicate variance from stoichiometric. In some instances the fuel/oxidizer ratios indicate drastic changes in various formulations that generally produce the same expected end results. Although not generally reported in detail, the fuel/oxidizer ratio has been useful in the correlation of some sensitivity data and output data with other similar pyrotechnic mixtures. As reported here under parametric data, there is no significance placed upon the value and it is used as a reference value only.

Each test method cited above is described and interpretations of results are given.

Autoignition Temperature

The Autoignition Test is the determination of the temperature at which a material will react when the specimen begins to liberate heat due to self-heating. This is accomplished by placing a sample in an automatically controlled oven with a thermocouple imbedded in the sample. The oven temperature is increased at a controlled rate until the sample material begins to liberate heat. At this point, the oven temperature is maintained at a constant temperature until the specimen reacts rapidly at its own autoignition temperature. The key to this test procedure is that when self-heating occurs no additional oven temperature is allowed to enter the sample. The reported value is usually less than the value reported for decomposition temperature as determined by a DTA apparatus. The autoignition temperature is the more critical value when comparison of various mixtures are made. Above the reported value, spontaneous ignition may occur; below this value, spontaneous ignition is unlikely even when cooled.

It should be pointed out that the values reported vary as a function of the type of oven used or control method of the oven. The key here is that the rate of heat applied by the apparatus is less than 0.1°C at the point where self-heating begins.

Autoignition temperature may also be calculated from results obtained in the determination of decomposition temperature by DSC or DTA. Harris[2] has reported on such a method that has proven reliable with explosives.

Decomposition Temperature

Decomposition temperature is the determination of the ignition temperature and other physical and chemical reactions which may occur in a pyrotechnic mixture when the mixture is heated. The test measures the temperature difference between the pyrotechnic mixture and a thermally inert reference material as both are heated at a constant rate of increase in temperature.

This test detects exothermic or endothermic changes that occur in the specimen while it is being heated. These changes may be related to dehydration, decomposition, crystalline transition, melting, boiling, vaporization, polymerization, oxidation or reduction. The temperature value at which the maximum differential between the sample and the reference temperature occurs is the reported decomposition temperature value.

A typical device is shown in figure 1. Values obtained vary as a function of the heating rate. In this publication, unless otherwise specified, the heating rate is 5°C/min.

As the heating rate increases, the decomposition temperature also increases. Additional variances (as much as 50°C) in the reported values may also be due to the type of apparatus in which the tests were conducted.

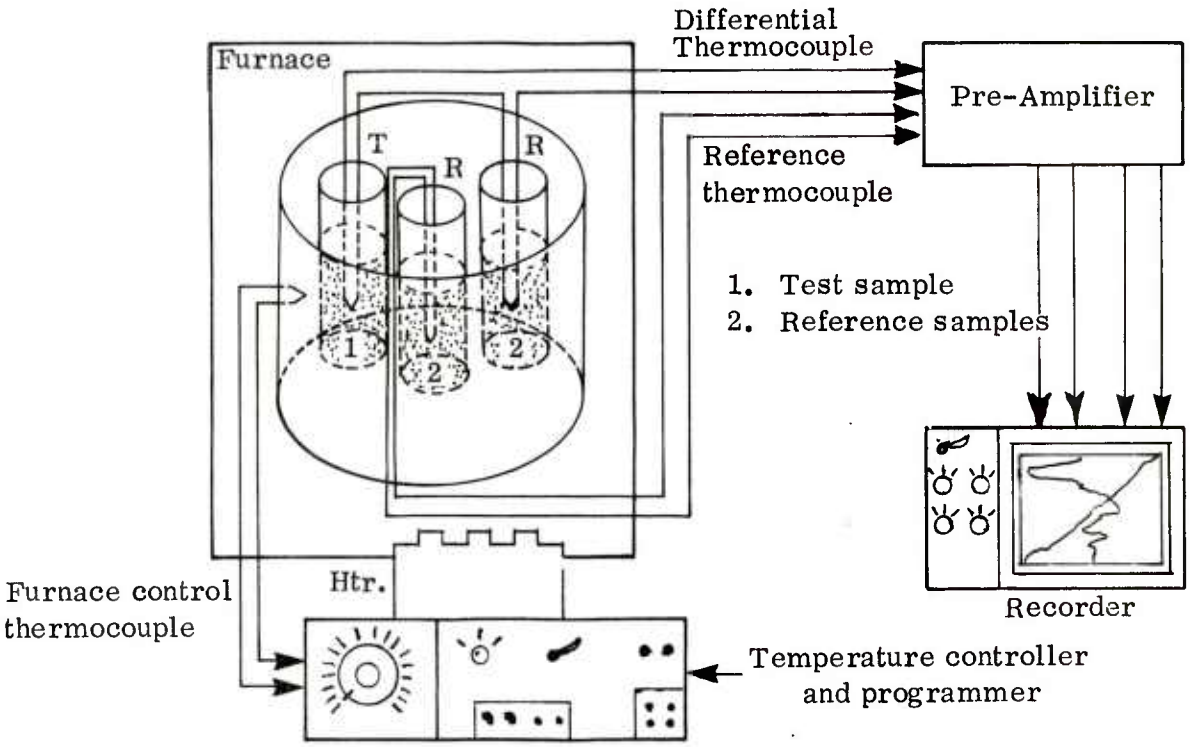

Figure 1. A Typical Differential Thermal Analyzer Apparatus

Density

The bulk density test determines the bulk or apparent density of pyrotechnic mixtures. Bulk density is the weight per unit of outside volume, which may include voids.

A sample specimen consists of sufficient pyrotechnic mixture to fill a 100 milliliter (ml) graduated cylinder. The cylinder is filled with the specimen sample by gravity feed to the 100 ml level. The filled cylinder is then allowed to stand undisturbed for 10 minutes. The fill volume is read to the nearest milliliter graduation. The cylinder and the specimen are then weighed on a balance to the nearest 0.01 gram.

The (apparent) bulk density in grams per cubic centimeter is calculated as follows:

$$\text{Bulk Density} = \frac{(A-B)}{C}$$

Where A is the weight of the cylinder and the specimen in grams, B is the weight of the empty cylinder in grams and C is the volume of the specimen in the cylinder in milliliters.

This value is useful in determining burn rate of the bulk material during certain manufacturing processes. The burn rate varies in direct proportion to density for most pyrotechnic mixtures. That is, as the density increases, the burning rate also increases. Density values also affect sensitivity of a given mixture, which is more sensitive in the unconsolidated state. Values are generally reported for the bulk mixtures as well as the

loaded density. The loaded density value is relative to the performance of the loaded end item or store.

Loaded density is usually calculated on the item after loading into the end item assembly and after consolidation where there are no voids.

Gas Volume

Gas volume of a specimen sample is obtained in a manner similar to heat of combustion, except that the reaction takes place in one atmosphere of air in the standard calorimeter bomb rather than in oxygen or an inert atmosphere. The sample is ignited and temperature and pressure measurements are obtained; the gas volume of the noncompressible gases is calculated by standard means, and the results are given in milliliter per gram (ml/g). A typical device is shown in figure 2.

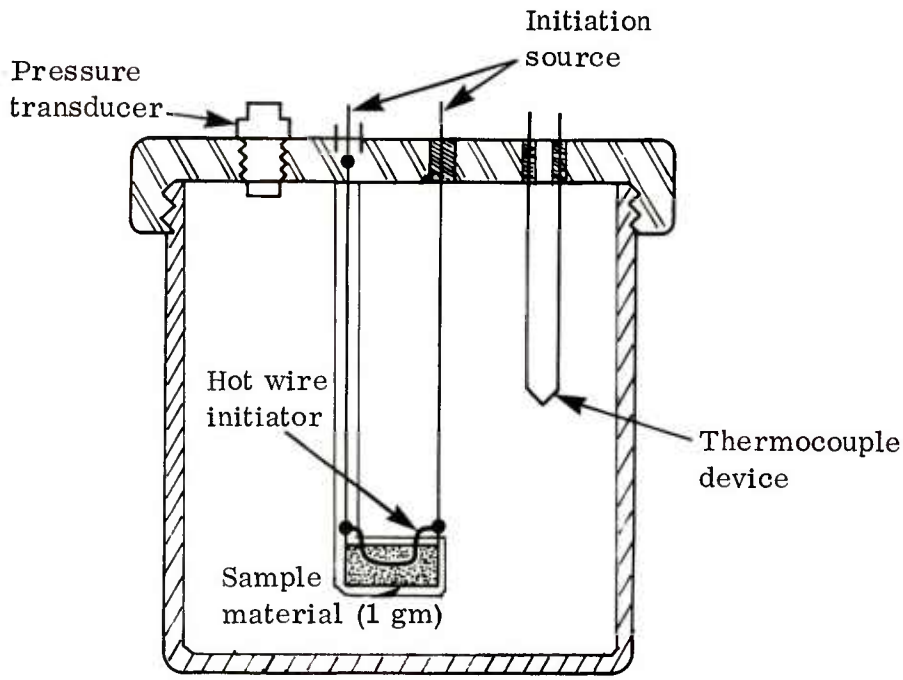

Figure 2. A Typical Gas Volume Measurement

The transducer will also provide a rate of change from which specific pressure time values are obtained. These results, such as peak pressure and pressure rate of rise, are reported as output characteristics on a given data sheet as shown in Appendix A.

The amount of gas liberated (gas volume) is significant in determining other characteristics of a given pyromix. It can generally be considered that pyrotechnic mixtures are not as gaseous as propellants or explosives. However, those mixtures which have liberated quantities of gas greater than 50 ml/g have a tendency to have a TNT equivalency of greater than 10%. Data to substantuate this hypothesis are limited in that there has only been a limited amount of testing in this area of pyrotechnics. Gas volume determination is quite useful in the development of many pyrotechnic compositions, particularly delay

mixes where the determination for design of columns must be taken into consideration when opting between an obturated versus a non-obturated column.

Gas volume data are considered a must for interim qualification of a given pyrotechnic mixture by this country and many of the NATO countries as a standarized test procedure. It may also be noted that similar gas volume measurements are used as an effective tool for quality assurance between batch and batch processes at various manufacturing facilities. Dillehay[3] reports on one such method used at his facility.

Heat of Combustion

The heat of combustion is the determination of the gross heat in terms of calories per gram of the pyrotechnic mixture. The gross heat of combustion is measured by burning 1 to 2 g samples of pyrotechnic mixture in an oxygen-filled (5 atmospheres) standard calorimeter bomb submerged in water and recording the rise in water temperature. Figure 3 shows a type of oxygen bomb calorimeter apparatus.

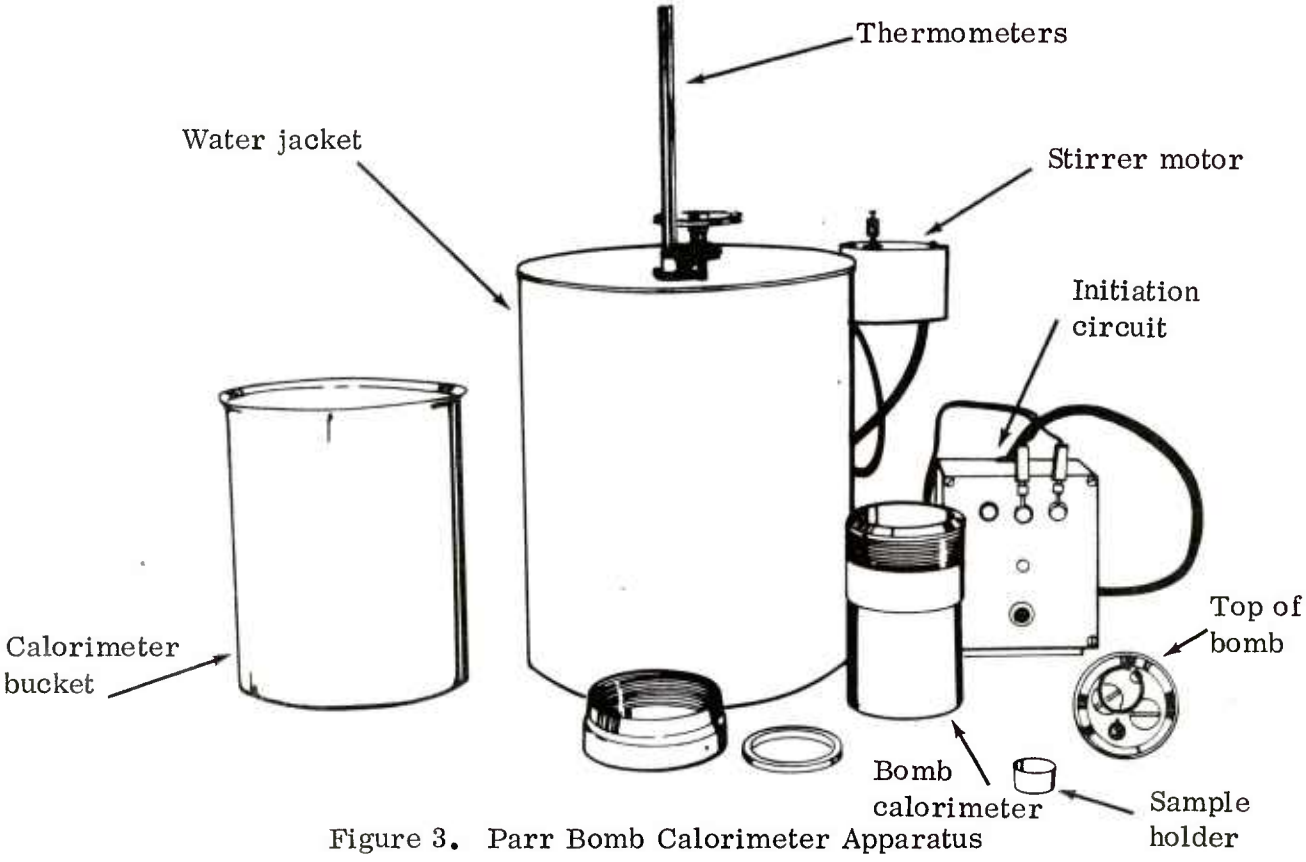

Figure 3. Parr Bomb Calorimeter Apparatus

The heat of combustion of a pyrotechnic mixture gives an indication of heat liberation potential and explosive power potential. These potentials are directly related to pyrotechnic mixtures hazard potential.

This test procedure is described in detail in ASTM D 240-64. Generally, the values obtained for pyrotechnic mixtures are higher than those obtained for either propellants or explosives. This does not mean that the material is more highly reactive than the

energetic materials. By definition, a pyrotechnic would seem to have a relatively higher heat of combustion than an explosive. It should be also noted that when following the standard instruction, the amount of oxygen in the formula is not taken into account when pressurizing the bomb to either 5 or 40 atmospheres with oxygen. This alone could account for a higher value for a pyrotechnic sample. There is no pretense on the significance of the values reported herein other than that they are the values obtained by experimental means. Correlation with specific output or performance characteristic has not been determined.

Heat of Reaction

The gross heat of reaction in terms of calories per gram is determined in a similar manner as the gross heat of combustion, except that the 1 to 2 g sample of pyrotechnic mixture is burned in an inert atmosphere (nitrogen) in the same standard bomb calorimeter.

Heat of reaction may be calculated using enthalpy data when the reaction products are known or assumed. Calculated values, when cited in this publication, are shown in parentheses.

STABILITY TESTS

Stability tests determine if a hazardous material should remain safe and retain its properties during some specified period of storage. Stability tests may be distinguished from other tests by: (1) the manner in which the stimulus is applied, (2) the rate it is applied, (3) non-destructive nature of the test, and (4) the objective of the expected results. Usually, in stability testing the stimulus is applied for a longer duration and when heat is applied, the temperatures are below ignition levels of the suspect materials. In some cases there are no stimuli applied; instead long term storage is observed under a certain set of conditions. The expected results are not initiation, but rather changes in weight, volume of gases liberated, discolorization, evolution of oxides, and its ability to function properly after prolonged storage conditions.

Stability tests, in general, are designed to be applicable to one type of material (either explosives, propellants, or pyrotechnics) and are not always suitable for each class. Hence, other type tests will be substituted.

Because stability testing is time-consuming, it is often desirable to subject the material to conditions which are more severe than those normally encountered during prolonged periods of storage. Specifically, two environmental factors can influence the stability of a given explosive: (1) humidity and (2) temperature. The latter receives the most attention in determining the stability of a material. In practice, the specimen material is subjected to a higher temperature than those normally encountered, and ultimately the material functions as intended at the completion of the elevated temperature study.

The following tests are included in the stability tests:

1. Hygroscopicity
2. Thermal Stability
3. Vacuum Stability
4. Weight Loss.

Hygroscopicity

Hygroscopicity is the determination of the amount of moisture that a given sample material will absorb in a given period under varying conditions. A 5 to 10 g sample is exposed for hygroscopicity under stated conditions and time until equilibrium is attained, or in cases where either rate is extremely low, or very large amounts of water are picked up. The sample, if solid, is prepared by sieving through a 50 mesh screen and onto a 100 mesh screen.

The values obtained under this test method are usually reported at 95% and 50% values. The ability of a sample to absorb moisture does not necessarily negate its use in an end item. The addition of binder and waterproofing agents may be used to improve performance in this area. Scaling of the end item for storage will also reduce the amount of moisture that a given pyrotechnic mixture can absorb. It should be pointed out that the values obtained in the hygroscopicity tests are usually performed on bulk mixtures. This value would be highly significant for manufacturing processes where temperature and humidity conditions can be maintained during blending and filling operations. A high value (greater than 10%) would not necessarily have any effect on a sealed end item if proper environmental conditioning occurred during manufacturing. However, it does point out what, if any, geometric parameters might need be considered when loading into an end item for long-term storage and ultimate use.

Values of less than 2% at 50% humidity are considered relatively good, whereas any value greater than 2% would be fair to poor. Values in excess of 10% at 90% humidity are generally considered to be fair to poor.

Thermal Stability

Samples are subjected to elevated temperatures to permit the observance of characteristic tendencies to detonate, ignite, decompose, or to undergo a change in configuration under adverse storage conditions. The sample is placed in an explosion-proof oven in which the temperature is maintained at 75°C (167°F) for a period of 48 hours. Oven temperature is continuously monitored throughout the test period. Observations recorded include whether the test specimen exploded, ignited, and/or underwent a change in configuration, such as a weight loss or change in color.

A typical oven test is shown in figure 4. This test is quite similar to various heat tests such as the International Heat Test 75°C. However, a significant difference is the quantity of material involved. Other test methods usually require a 1 to 5 g sample size. This test, as described in TB 700-2 [4], uses a larger mass (60 to 250 g) with a constant sample volume of 5.03 cm^3 (2 in^3). This size of sample is much more realistic since common end items have similar quantities.

The results from this test aid in the determination of the overall classification of a bulk material. A 1% to 2% moisture loss is not considered as a significant change in weight or configuration.

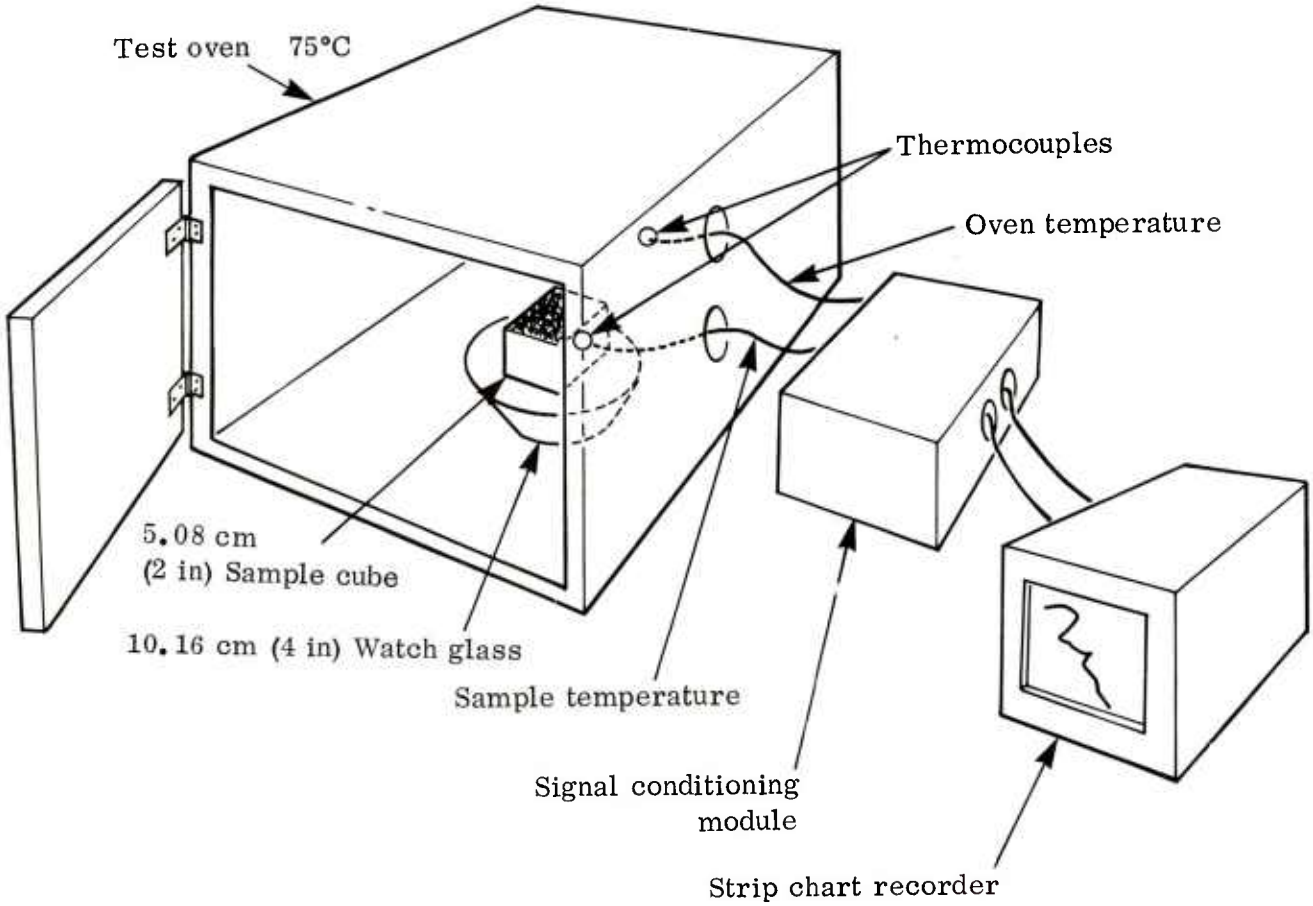

Figure 4. Typical Thermal Stability Test Set Up

Vacuum Stability

The vacuum thermal stability test is a standard test for determination of the stability of a pyrotechnic composition in storage conditions. This test is generally run at 100 to 120°C. The pyrotechnics are classed according to stability depending upon the quantity of gas evolved.

Stability Classes:

Vacuum thermal stability at 100°C	Vol gas/g/40 hr
ml gas	Class
0-0.2	I
0.2-0.6	II
0.6-1.8	III
1.8+	IV

Class I pyrotechnics are considered generally suitable for military use. A typical vacuum stability set up is shown in figure 5.

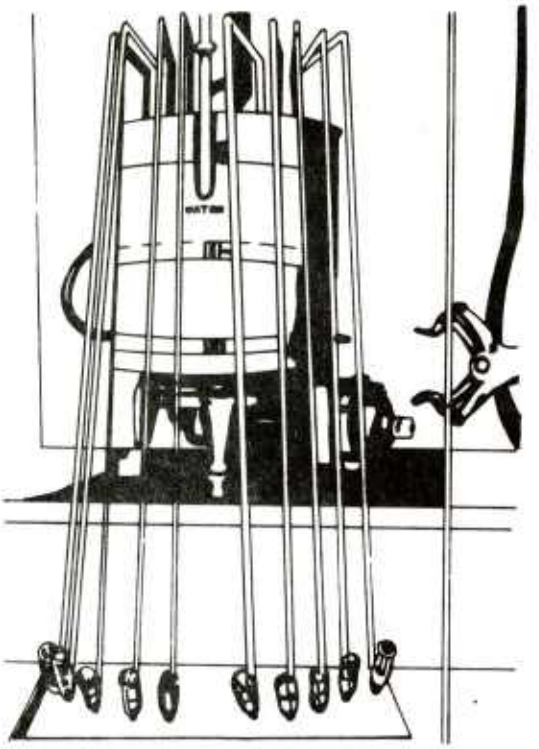

Figure 5. Vacuum Stability Test Set Up

Criticism of this test as a requirement for interim qualification for a pyrotechnic is warranted in that some types of pyrotechnic mixtures have an autoignition below the 120° C value, and the gas volume is not necessarily a good indication of the stability of a mixture once it has been loaded into an end item. However, many experimentalists still use this test and interpretation to determine the stability of a pyrotechnic mixture.

Weight Loss

The weight loss test determines the moisture and volatile matter content of pyrotechnic mixtures. The determination is based on the loss of weight of a sample specimen in an oven under vacuum. A predetermined amount of specimen material is weighed to the nearest 0.001 gram then placed in a vacuum oven at 760 mm Hg (28 in Hg) at a temperature of 50+5°C for a minimum of 4 hours to a maximum of 48 hours. The sample is removed from the oven and reweighed. The difference is recorded as the weight loss value.

Of the stability tests, weight loss determination by the vacuum oven method is the most versatile and the least time-consuming. It is versatile in that the geometry or the mass of the sample material does not have to be as constant. It may be performed for a desired period of time from 4 to 48 hours and the oven temperature is usually 50°C versus 75° to 120°C for other types of stability tests. The amount of gas or type of gas is not as important in determining the stability of a given material. The results of this test as it pertains to pyrotechnic mixtures show a very good correlation with the results of the hygroscopicity tests. To date, the determination of stability by this method has been limited, but a sample material which has a weight loss due to moisture and/or volatiles of less than 2 to 5% is considered stable. Some form of weight loss test is currently being considered as a standardized qualification test for pyrotechnic mixtures. A typical test setup is shown in figure 6.

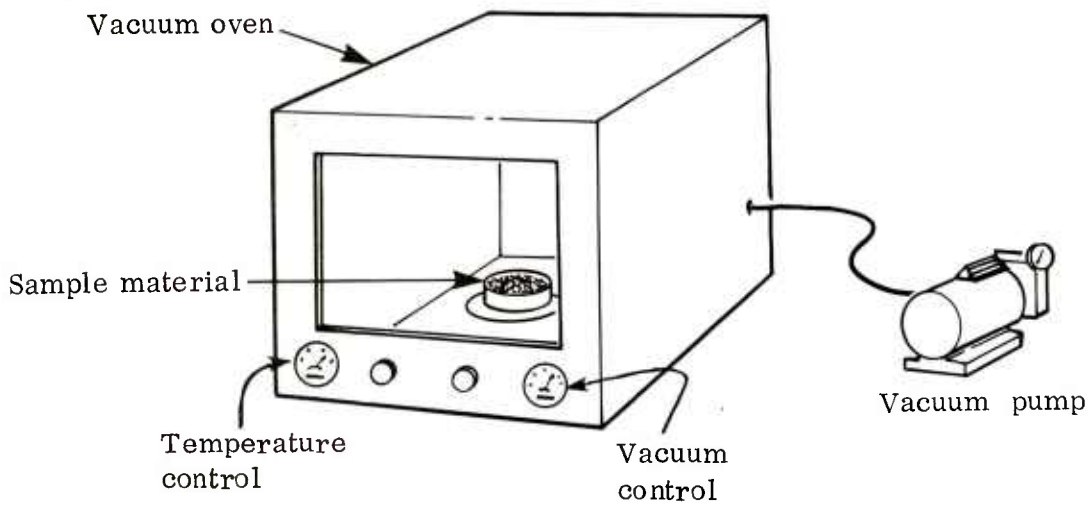

Figure 6. Weight Loss Test Set Up

SENSITIVITY TESTS

Sensitivity tests determine the minimum susceptibility of a given material to react to an externally applied energy. Sensitivity tests are abstract in view of the fact that they do not necessarily apply to output energies or application. In each case, the test is designed for a given set of externally applied energy sources to the system. The reaction may be a rapid output and the analysis may be qualitative or quantitative. Sensitivity tests do not stand alone in establishing safety criteria and parameters; rather, they determine at what energy levels a given material will react.

The following tests are included in the sensitivity tests:

1. Card gap
2. Detonation
3. Electrical spark
4. Electrostatic
5. Friction
6. Ignition and unconfined burning
7. Impact sensitivity.

Card Gap Test

The card gap test as it applies to pyrotechnic mixtures determines the sensitivity of a given material to a severe stimulus under conditions of strong confinement.

The sample material is placed in a 13.97 cm (5.5 in) long cold-drawn seamless steel tube, composition 1015, having an outside diameter of 4.76 cm (1.875 in) and a wall thickness of 0.556 cm (0.219 in). The assembly is placed on a 15.24 by 15.24 by 0.953 cm (6 by 6 by 3/8 in) steel witness plate in such a manner as to have a 0.159 cm (1/16 in) air gap between the tube and the witness plate. Two pentolite pellets, 5.08 cm in diameter by 2.54 cm height (2 by 1 in) are placed directly on top of the assembly and in contact with

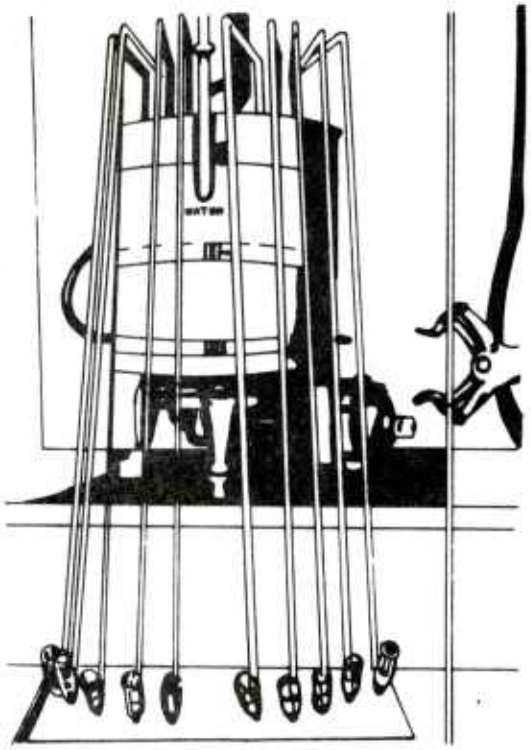

Figure 5. Vacuum Stability Test Set Up

Criticism of this test as a requirement for interim qualification for a pyrotechnic is warranted in that some types of pyrotechnic mixtures have an autoignition below the 120° C value, and the gas volume is not necessarily a good indication of the stability of a mixture once it has been loaded into an end item. However, many experimentalists still use this test and interpretation to determine the stability of a pyrotechnic mixture.

Weight Loss

The weight loss test determines the moisture and volatile matter content of pyrotechnic mixtures. The determination is based on the loss of weight of a sample specimen in an oven under vacuum. A predetermined amount of specimen material is weighed to the nearest 0.001 gram then placed in a vacuum oven at 760 mm Hg (28 in Hg) at a temperature of 50+5°C for a minimum of 4 hours to a maximum of 48 hours. The sample is removed from the oven and reweighed. The difference is recorded as the weight loss value.

Of the stability tests, weight loss determination by the vacuum oven method is the most versatile and the least time-consuming. It is versatile in that the geometry or the mass of the sample material does not have to be as constant. It may be performed for a desired period of time from 4 to 48 hours and the oven temperature is usually 50°C versus 75° to 120°C for other types of stability tests. The amount of gas or type of gas is not as important in determining the stability of a given material. The results of this test as it pertains to pyrotechnic mixtures show a very good correlation with the results of the hygroscopicity tests. To date, the determination of stability by this method has been limited, but a sample material which has a weight loss due to moisture and/or volatiles of less than 2 to 5% is considered stable. Some form of weight loss test is currently being considered as a standardized qualification test for pyrotechnic mixtures. A typical test setup is shown in figure 6.

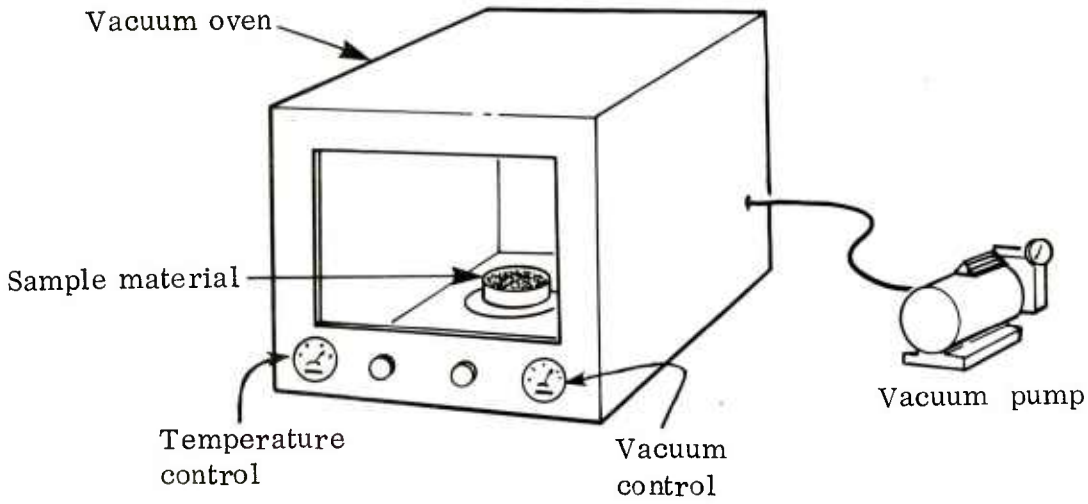

Figure 6. Weight Loss Test Set Up

SENSITIVITY TESTS

Sensitivity tests determine the minimum susceptibility of a given material to react to an externally applied energy. Sensitivity tests are abstract in view of the fact that they do not necessarily apply to output energies or application. In each case, the test is designed for a given set of externally applied energy sources to the system. The reaction may be a rapid output and the analysis may be qualitative or quantitative. Sensitivity tests do not stand alone in establishing safety criteria and parameters; rather, they determine at what energy levels a given material will react.

The following tests are included in the sensitivity tests:

1. Card gap
2. Detonation
3. Electrical spark
4. Electrostatic
5. Friction
6. Ignition and unconfined burning
7. Impact sensitivity.

Card Gap Test

The card gap test as it applies to pyrotechnic mixtures determines the sensitivity of a given material to a severe stimulus under conditions of strong confinement.

The sample material is placed in a 13.97 cm (5.5 in) long cold-drawn seamless steel tube, composition 1015, having an outside diameter of 4.76 cm (1.875 in) and a wall thickness of 0.556 cm (0.219 in). The assembly is placed on a 15.24 by 15.24 by 0.953 cm (6 by 6 by 3/8 in) steel witness plate in such a manner as to have a 0.159 cm (1/16 in) air gap between the tube and the witness plate. Two pentolite pellets, 5.08 cm in diameter by 2.54 cm height (2 by 1 in) are placed directly on top of the assembly and in contact with

the sample material; i.e., without the intervention of any acetate cards between the sample and the pellets. (Acetate cards are only used when evidence of a detonation occurs on the first trial.) A J-2 engineers' special blasting cap is positioned on top of the pentolite, and the complete card gap test assembly is supported by a wooden stand approximately 15.24 cm (6 in) above the ground surface. The blasting cap is initiated remotely. Detonation is indicated when a clean hole is cut in the witness plate. The measure of charge sensitivity is the length of attenuation (gap length) at which there is a 50% probability of detonation. The charge sensitivity will be expressed in terms of 0.025 cm (0.01 in) cards necessary for the 50% value between detonation and no detonation. Figure 7 shows the required test set up as outlined in TB 700-2, and all test results reported in this publication were performed in this manner.

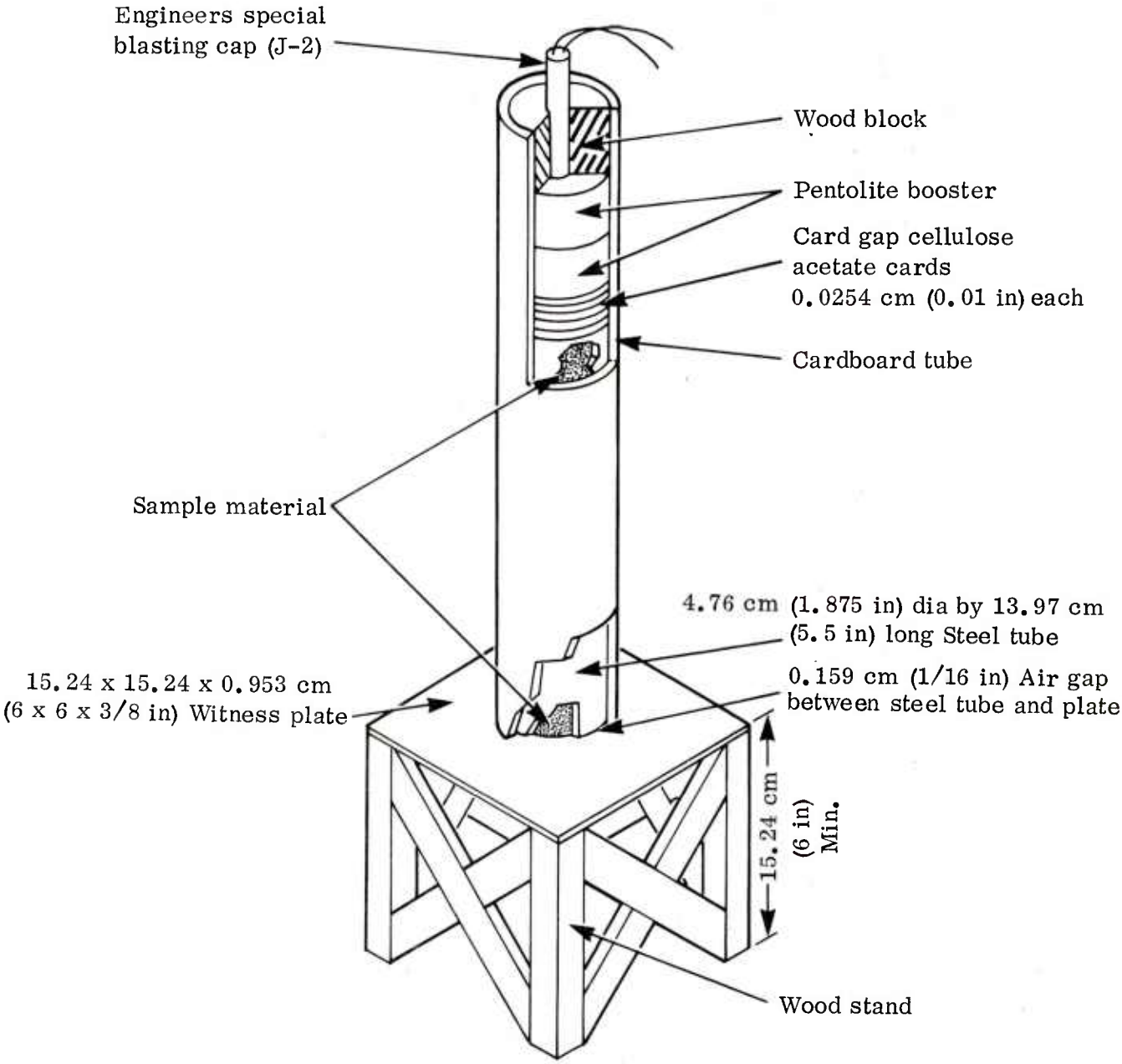

Figure 7. TB 700-2 Card Gap Test Configuration

Validity of this test as a measure of degree of hazards associated with a pyrotechnic is still questionable. This is because not many so-called pyrotechnic mixtures have ever produced a "clean hole," by definition, when tested in this manner. However, those pyrotechnic mixtures that have a TNT equivalency of greater than 50% will cause a puncture of the witness plate. Additionally, some experimentalists have measured the indentation or bend in the plate to determine the degree of hazards associated with a pyrotechnic. There seems to be no real correlation of the indentation value to TNT equivalency results. This type work has been reported by King and Koger [5]. In any event, this test method has not been replaced by another type of test that does provide a measure of hazards potential for a pyrotechnic mixture.

Detonation Test

Detonation tests are performed to measure the sensitivity of a sample material to the reaction of a number 8 blasting cap. A 5.08 cm (2 in) cube sample is placed on top of a perpendicular 3.81 cm (1.55 in) diameter by 10.16 cm (4 in) high lead cylinder. The blasting cap is placed perpendicular to, and in contact with, the top surface of the sample. A 5.08 cm (2 in) wood cylinder with a hole drilled through its center is used to position and support the blasting cap. The blasting cap is then initiated remotely. This test is conducted a minimum of five times, or until detonation is evidenced, whichever is less. Observations are made to determine whether the sample exploded, burned, and/or fragmented. A typical test set up is shown in figure 8.

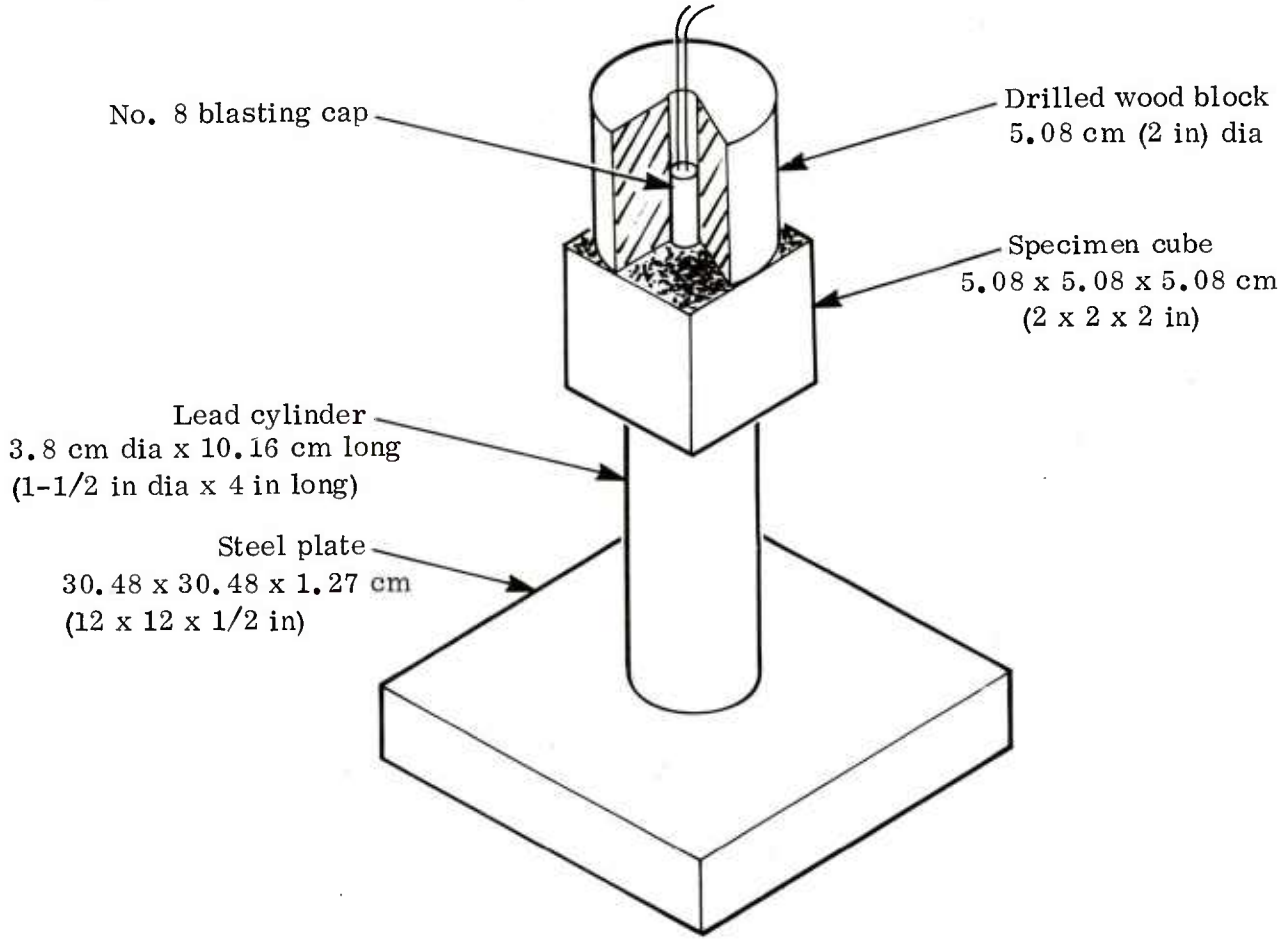

Figure 8. Detonation Test Configuration

Test results for pyrotechnic mixtures have varied as greatly as the formulations tested. Initiators and some illuminants have caused some mushrooming. The ambiguity of this test lies in the definition of mushrooming, but good judgement on the part of the experimentalist has generally led to good interpretations. There seems to be some correlation between positive results (mushrooming) and higher TNT equivalency values for these same sample materials.

Electrical Spark Sensitivity Test

The electrical spark test determines the sensitivity of a pyrotechnic mixture by the minimum amount of energy in an electrical spark discharge that will ignite the test specimen. This energy value is expressed in joules. A small amount of sample material is placed on a grounded anode and the electrode (which is charged with high voltage through a series capacitor) is lowered to the anode until an electrical spark occurs. The energy level is increased or decreased depending upon the reaction until the minimum energy level that produces ignition is obtained. The test is repeated a minimum of three times at this level and this value is recorded. A typical test set up is shown in figure 9.

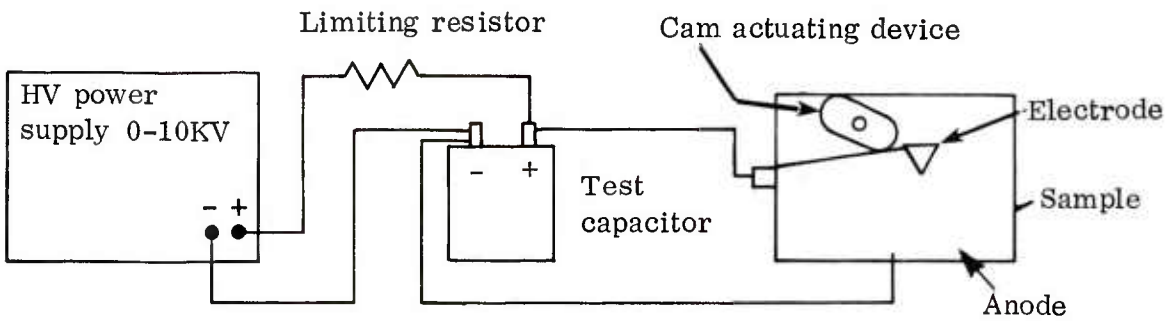

Figure 9. Electrical Spark Sensitivity Test Set Up

This test has proven to be a very valid test for pyrotechnic mixtures. However, extreme care should be exercised in interpretation of test results. It should be noted that at very high energy levels (above 20 joules) the arc can cause the pyrotechnic sample to disperse and, in some instances, this will ignite a dust cloud rather than a layer of sample material. Interpretation of results should not be analgous with dust explosion energies, as there may be several orders of magnitude of difference of energy between ignition of a layer versus a dust cloud. The former usually requires less energy.

Additional care should be exercised to standardize this procedure with a known base line composition, and the environmental conditions of the test area should be controlled as closely as possible between test series. Although specific test apparatus used by several different test agencies may vary somewhat, the electrode to anode energy transfer and sample size seems to be somewhat constant. Although data obtained between various testing agencies may not be the exact same value, they do in fact indicate the same order of magnitude of energy required for initiation. This is a somewhat gross approximation, but there is a good correlation of test results.

Minimum Dust Concentration

Electrostatic tests are performed in a Hartmann Apparatus and determine: (1) the minimum concentration for pyrotechnic dust dispersed pneumatically in air, and (2) minimum electrostatic discharge energy required to ignite a pyrotechnic dust.

Minimum concentration is determined by varying the amounts of finely divided pyrotechnic materials in a constant volume of air and exposing them to a glowing hot wire. The dust/air mixture is that quantity of dust required to generate sufficient pressure upon initiation within the chamber to rupture a filter-paper diaphragm. The minimum explosive dust/air concentration is recorded in grams of dust dispersed in m^3 (ft^3) of air.

Minimum Energy

The minimum energy in a dust/air mixture is determined by exposing the sample specimen to varying capacitor discharge spark initiation energies. The minimum electrostatic discharge energy is defined as the lowest possible energy which will ignite the dust/air mixture and result in a flash extending a minimum of 10.16 cm (4 in) above the ignition point. The minimum initiation energy is recorded in joules. A schematic of the apparatus is shown in figure 10.

There are some questions as to the validity of this test method. Particular concern has been expressed over the possibility of obtaining a good even distribution of the sample material throughout the chamber. Others point out that results obtained do not scale when tested in larger chambers. Because of these questions, other techniques devised in Switzerland and the Netherlands seem to offer a more valid approximation of a dust explosion.

To date, data obtained in the Hartmann Apparatus has scaled by at least the same order of magnitude for dust concentration and energy levels required for initiation. It has been found that when various agencies go to different sizes of dust galleries to collect the data, they do not necessarily hold the same mechanical and chemical parameters that were held constant in the Hartmann Apparatus. Under these conditions, it can then be said with some validity that the results do not scale.

It should be understood from the outset that good dispersion can be obtained if care is exercised in the adjustment of the air deflector. Also, the Hartmann device can be controlled precisely as to the amount of air required for dispersion. This may not be the case in larger galleries. Initiation energy again varies between the Hartmann device and other types of experiments. Such differences are not subtle ones and would affect the outcome of the results. Again, experiments conducted by this agency seem to indicate that Hartmann results are scalable to within the same order of magnitude when tested in larger dust galleries. The use of the Hartmann device is still recommended until a better apparatus can be devised.

Friction Sensitivity

The friction pendulum test determines whether or not a given material is susceptible to initiation by a specified frictional force.

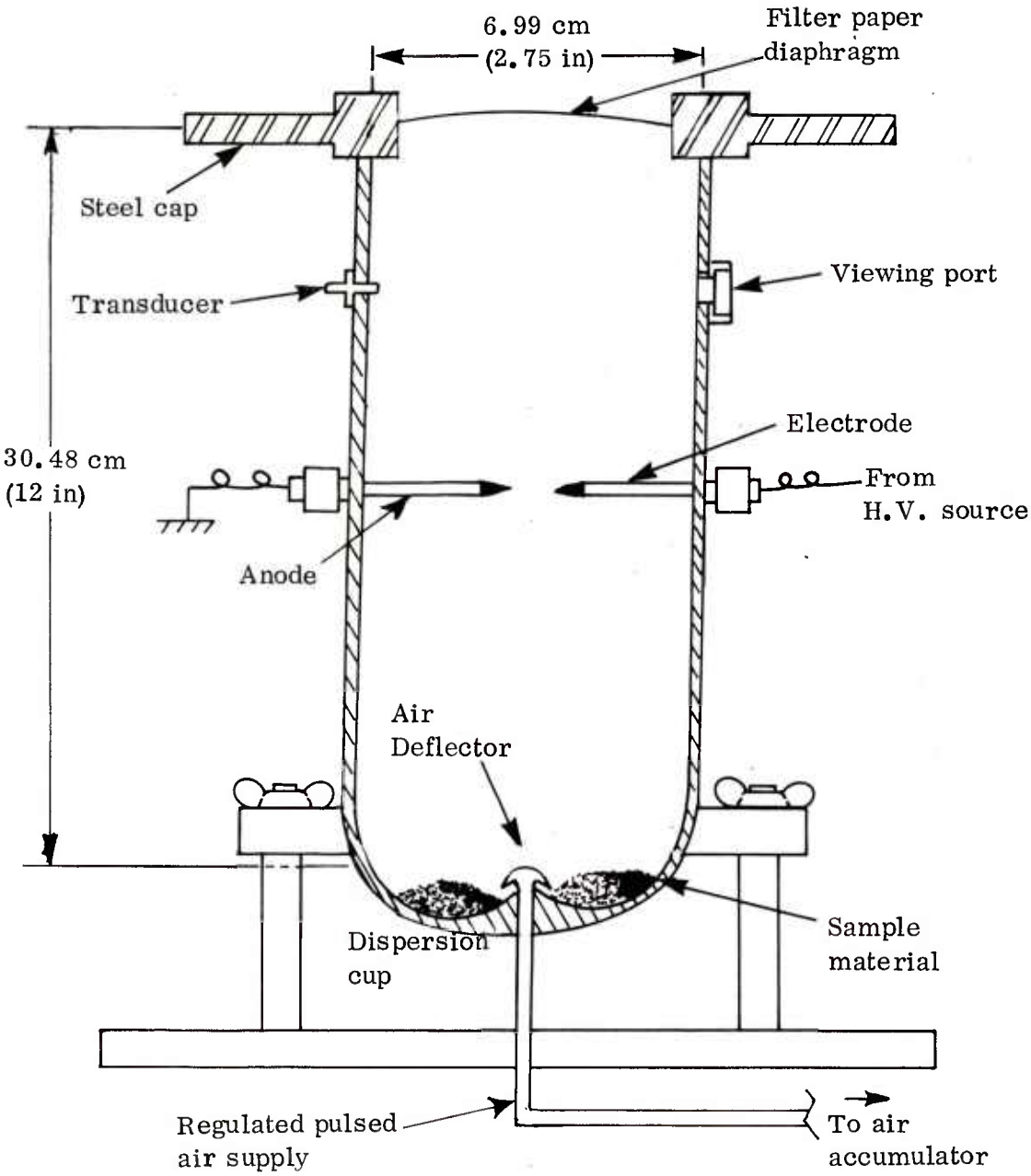

Figure 10. Hartmann Apparatus Schematic

A test consists of ten trials with the steel shoe, except when complete explosion or burning occurs in any trial. If explosion or burning occurs, the trials with the steel shoe are discontinued. Ten trials are made with the fiber-faced shoe only when complete explosion or burning occurs with the steel shoe, or as prescribed in the test directive. If the pyrotechnic passes the test with the steel shoe, no further trials are conducted. A pyrotechnic is regarded as passing the friction pendulum test if, in ten trials with the hard-fiber-faced shoe, there is no more than an almost inaudible local crackling, regardless of its behavior when subjected to the action of the steel shoe. The Picatinny friction pendulum device is shown in figure 11.

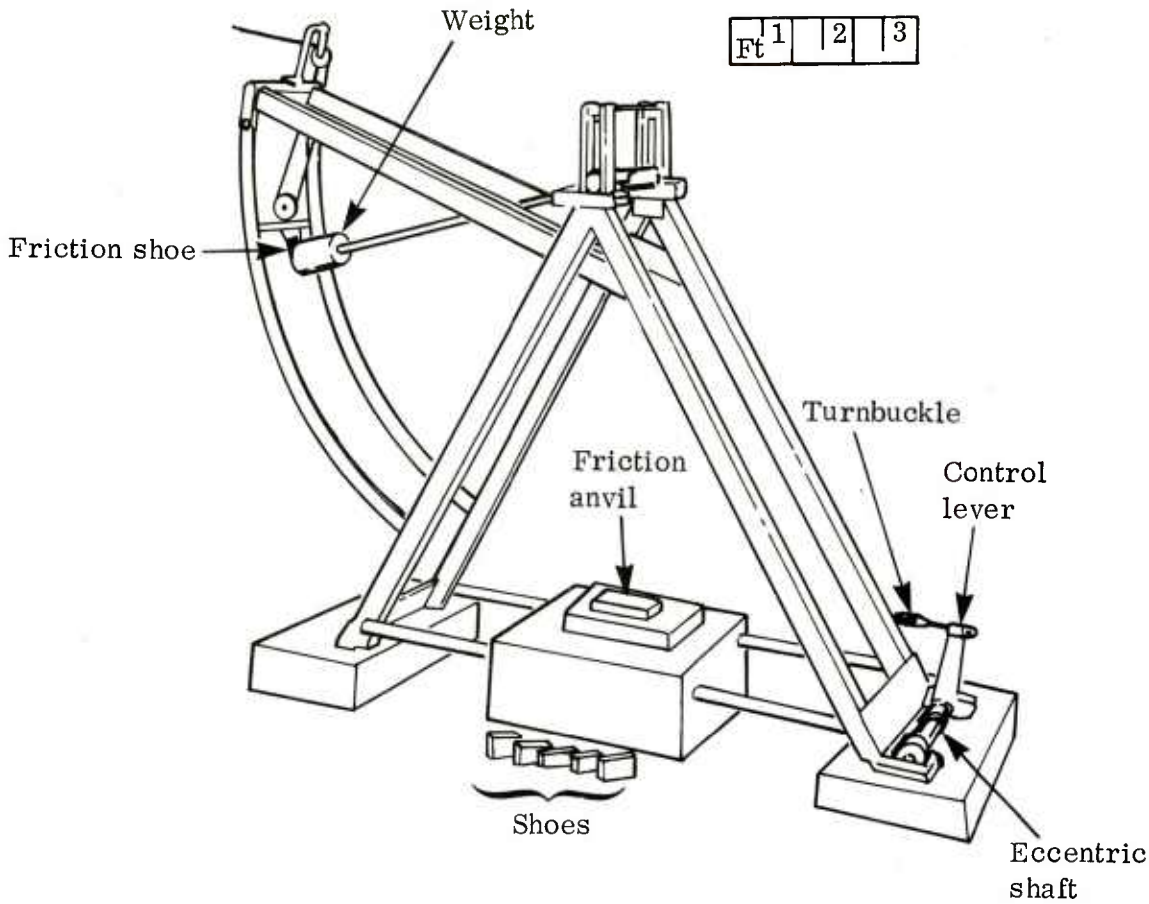

Figure 11. Friction Pendulum Test Apparatus

This test is a "go-no-go" type test whereby a gross value is obtained. For this reason, the results are not usually equitable to a specific set of conditions. Although the test method and the steel and fiber shoes are standardized, this is not a mandatory test for classification. Because of this, minimum amounts of data for the majority of pyrotechnic mixtures have not been obtained. This is an area for concern in that, as discussed later, a majority of the accidental initiation associated with pyrotechnic accidents were the result of friction-type stimulus.

Rotary friction is another type of device that determines the maximum frictional energy which will not ignite pyrotechnic mixtures. The specimen being tested is exposed to the friction generated between a stationary wheel and a sliding anvil surface. The pressure of the wheel upon the anvil, the speed of the anvil, and the wheel and anvil materials of fabrication are varied to simulate in-process frictional forces being assessed. In this data compilation, the wheel and anvil materials of fabrication are steel. The friction generated is expressed as newtons per square meter of contact area between the wheel and anvil at the anvil speed used for the test.

This test method is used extensively as a quality control check on various mixtures. This method offers a quantitative value that may be comparable with other mixtures. However, data obtained by the rotary friction method may not necessarily compare with the results of the friction pendulum device. Still, this method is a definite improvement if a quantitative value is desired.

Countries such as the United Kingdom and Germany have offered similar rotary friction devices. This seems to be the trend in replacing a qualitative test with an acceptable quantitative test. It should be stressed that some standardization is necessary in light of cause/effect relationships of many accidents associated with pyrotechnics. A schematic of the rotary friction device currently used by the U.S. Navy is shown in figure 12.

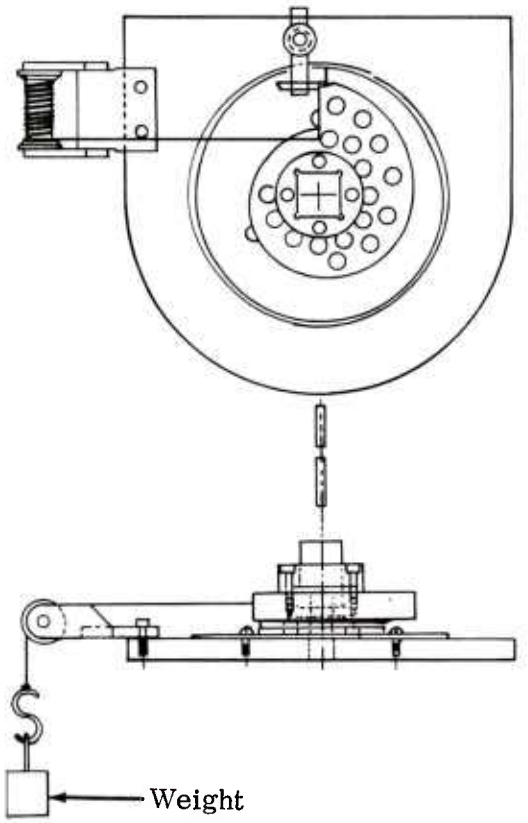

Figure 12. Rotary Friction Apparatus

Ignition and Unconfined Burning

The ignition and unconfined burning test determines if a sample material is susceptible to detonation due to an open flame.

These tests are conducted on single and multiple (four) 5.08 cm (2 in) cube samples. For test number 1 (single sample test) a 5.08 cm (2 in) cube sample is placed on a kerosene-soaked sawdust bed which is ignited remotely. This test is conducted a minimum of two times. Figure 13 shows the single cube configuration. For test number 2 (multiple cube test) four 5.08 cm (2 in) cube samples are placed end-to-end in a single row in contact with each other on a single bed of kerosene-soaked sawdust and ignited remotely. This is conducted a single time. The data include a report of occurrence of detonation or burning time of samples. Figure 14 shows the multiple cube configuration.

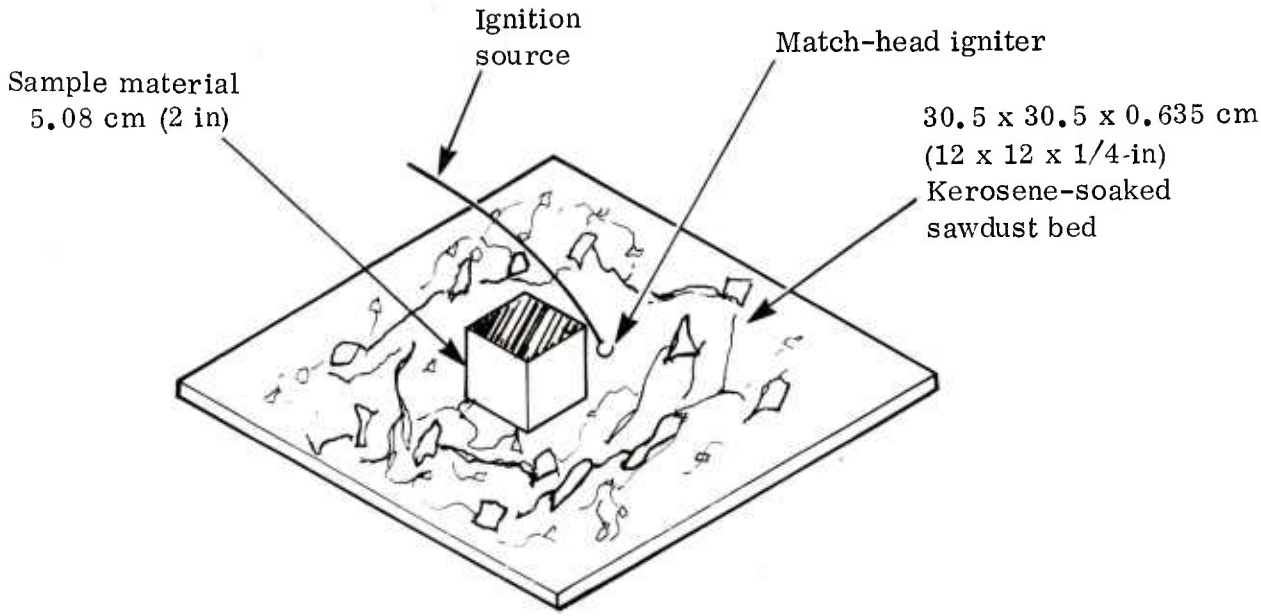

Figure 13. Test Configuration (Single Cube)

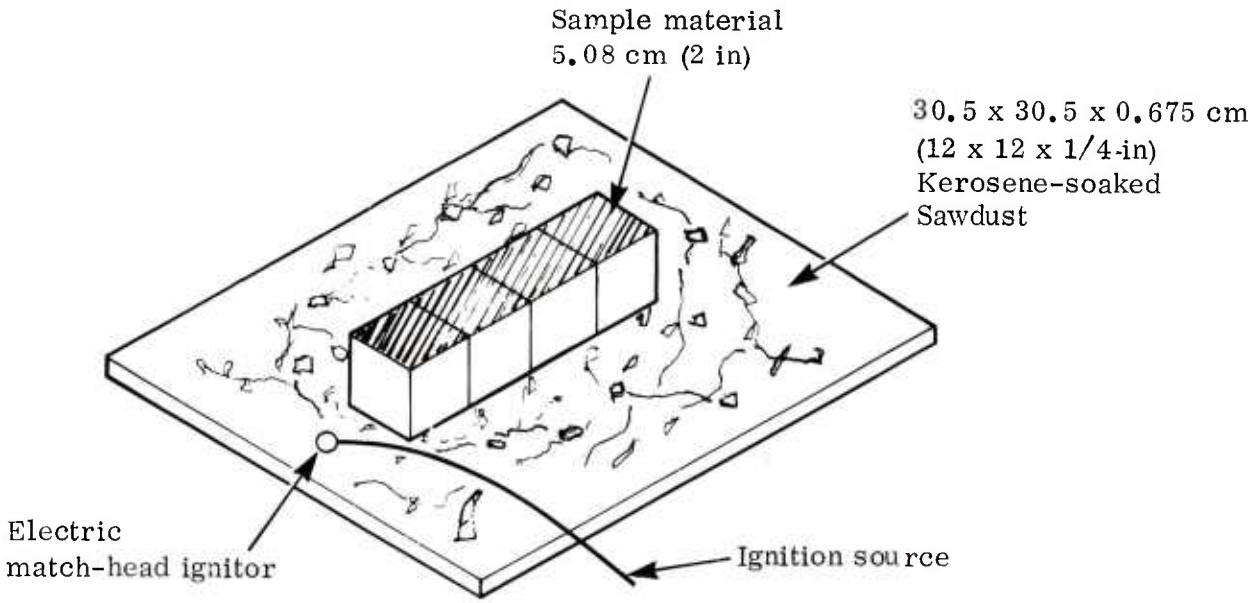

Figure 14. Test Configuration (Multiple Cube)

This test method is generally considered to be invalid for pyrotechnic mixtures and it has been suggested that a different type of burn test be conducted that could determine critical diameter and/or mass for a given pyrotechnic mixture. In this test configuration a given pyrotechnic functions as intended and burns. It gives no valid answer to its behavioral characteristic during any bulk process handling or end item configuration.

Impact Sensitivity

Impact sensitivity determines the minimum energy at which a falling weight will cause a sample material under total confinement to ignite and/or explode. There are three devices used to measure impact sensitivity: (1) Bureau of Explosive Apparatus (BoE), (2) Bureau of Mines Apparatus (BoM), and (3) the Picatinny Impact Apparatus (PA).

Impact Sensitivity (BoE)

A series of twenty tests are performed to determine the sensitivity of the sample material to mechanical shock (impact). A 10 mg sample is place in the test cup. The 2 kg test weight is dropped from a predetermined height, striking the sample.

The results of the 20 tests per sample, 10 at 9.5 cm (3 3/4 in) drop height and 10 at 25.4 cm (10 in) drop height, are reported as the number of trials exhibiting explosion, decomposition, and no reaction.

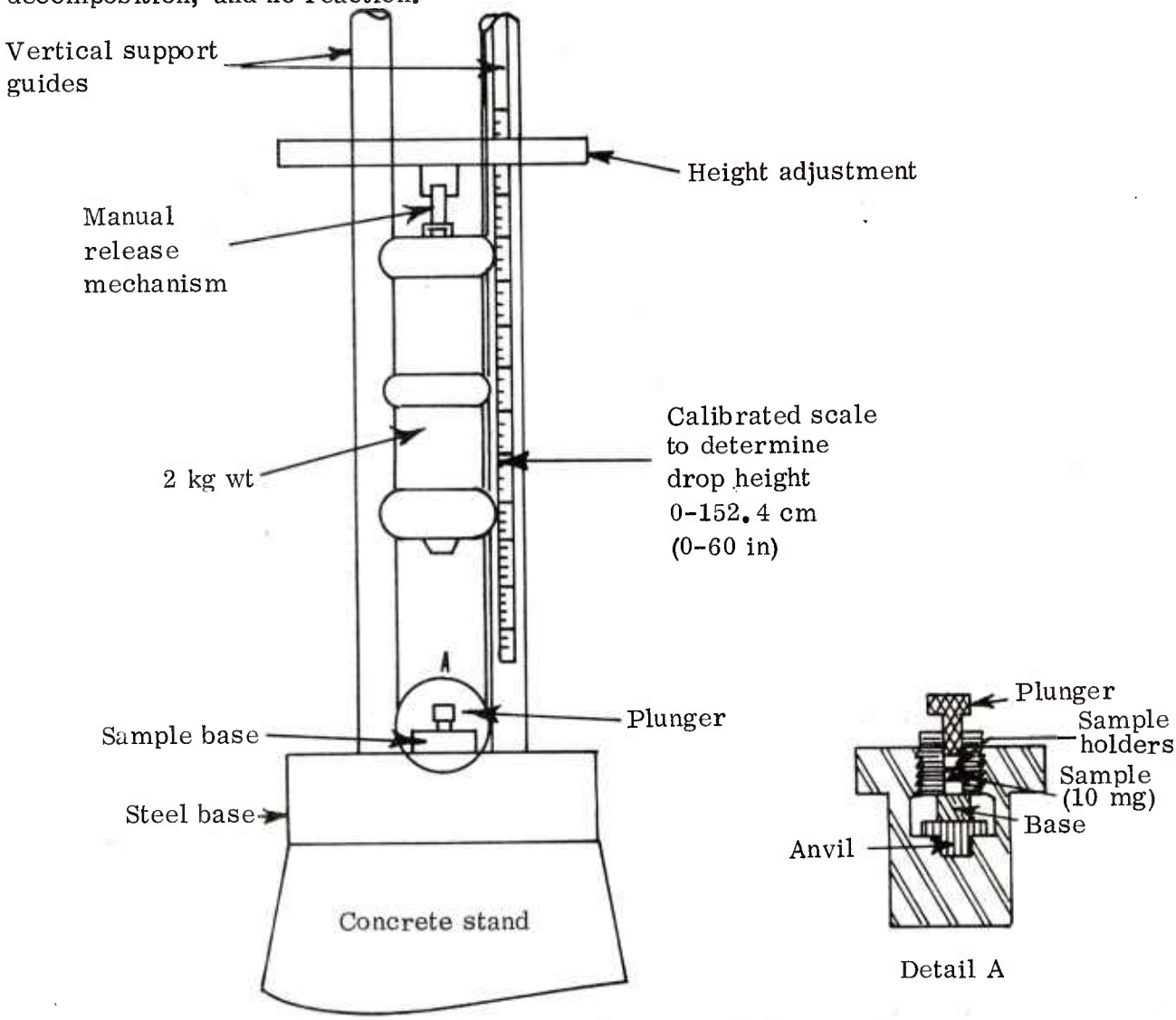

Figure 15. Bureau of Explosives Impact Apparatus

Impact Sensitivity (BoM)

A 20 mg sample is placed between two flat, parallel hardened (C63 $\pm$ 2) steel surfaces. The 2 kg weight is raised to the desired height and allowed to fall upon the sample. The impact value is the minimum height at which at least one of 10 trials results in an explosion.

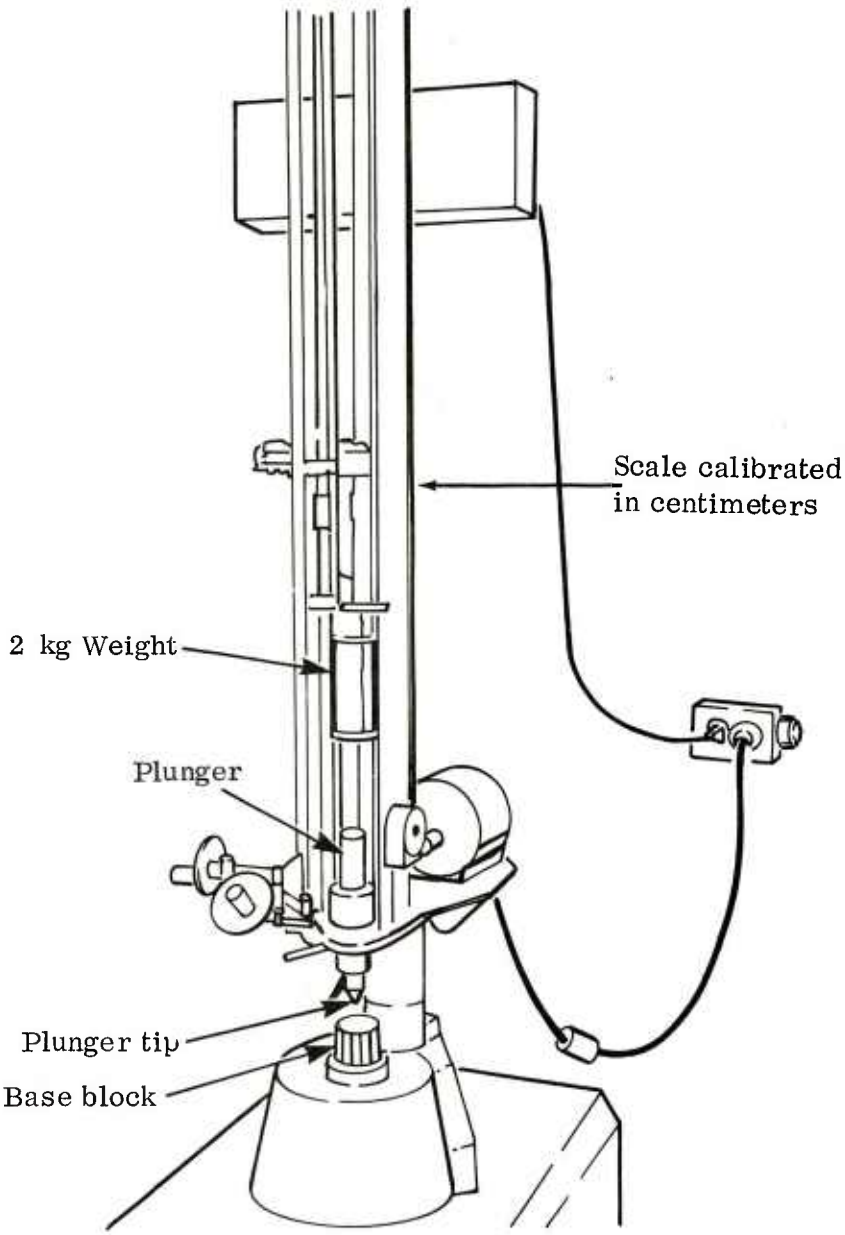

Figure 16. Bureau of Mines Impact Apparatus

Impact Sensitivity (Picatinny Apparatus)

A sample material is passed through a no. 50 U.S. standard sieve and retained on a no. 100 sieve. Ten previously weighed die cups are filled with the sample specimen and the excess is stricken off by means of a wooden or plastic spatula. The die cup and sample material are then reweighed and the average weight of the material in each cup recorded. A brass cover is placed over each loaded die cup and pressed down by means of a small arbor press so that the cover is in contact with the top rim of the die cup. The loaded die cup is placed in the anvil. A vented plug is placed on top in the exact center of the brass cover. The 1 or 2 kg hammer is allowed to fall upon the sample. The up-down staircase

method is used to determine the minimum height at which impact of the falling weight causes the sample material to explode in one of 10 trials.

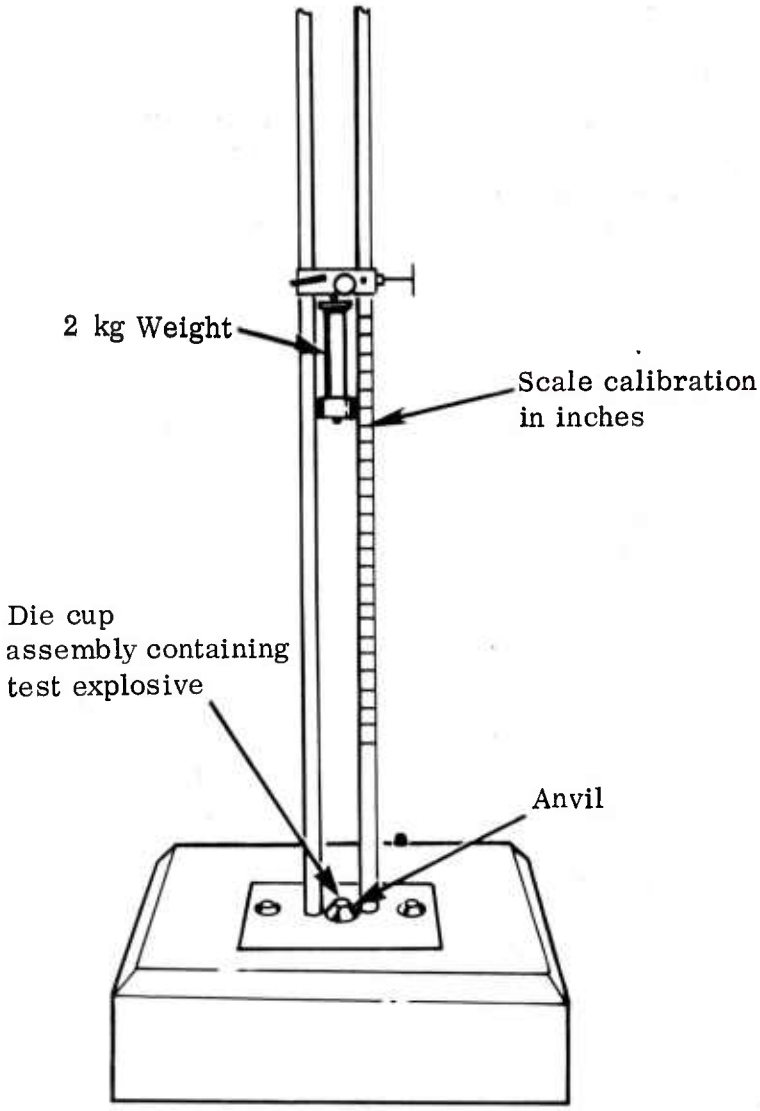

Figure 17. Picatinny Impact Apparatus

It should be noted that there are varied results between the three apparatus. This is primarily due to the major differences in the way that the experiments are conducted and reported. In the BoM and BoE apparatus, 10 mg samples are used, and the sample is placed between these parallel flat plates. The value reported in the BoM apparatus is the minimum drop height at which a reaction occurred; whereas, in the BoE device, the results at two specified drop heights are reported. In the Picatinny apparatus the sample material varies as a function of density, and the amount of material required to fill the vented or unvented cup (which can vary from 8 to 20 mg) is used and the reported value is a 50% value for a given reaction. When these factors are taken into consideration, then the results are somewhat similar.

It should also be pointed out that there are almost as many different types of impact apparatus as there are test agencies, and the results from such devices may be significantly different. However, the BoE, BoM, and the Picatinny apparatus have been utilized the most by a majority of test agencies. Data obtained from other devices were not included in this publication.

OUTPUT TESTS

Output tests determine the potential yield of a given material and are usually measured in force, magnitude, and time once an external energy source has been applied. The measured results, quantitative or qualitative, are separate from the applied energy and assess such potentials as brisance, yield, damaging effects of fire, radiation, blast overpressure, fragmentation, and rates of reaction. Output tests are generally destruct type tests.

The following tests were included in output tests:

1. Burn time
2. Critical diameter
3. Critical height
4. Pressure time
5. High explosive equivalency

Burn Time

The burn test determines the linear regression of the reaction zone measured in seconds per centimeter or in other units. Burning time values are measured in the ignition and unconfined burning tests, end item tests, and in special apparatus such as a "vee" block or a vented column. Burn time information on bulk mixtures is not a valid measure of end item performance, but when measured as a function of bulk density it will indicate certain behavioral characteristics during manufacturing processes. The values reported herein are for reference only and should not be construed as the output performance characteristics of a given pyrotechnic mixture.

Critical Diameter

In the critical diameter tests the sample material is subjected to pressures of a detonating high-energy donor to determine the minimum dimension required to induce a sustaining explosive reaction in the acceptor material. Testing is conducted using various diameters of samples and confinement. The acceptor test sample length is maintained to a minimum of four times its daimeter. The diameter of the explosive donor, composition C4, is equal to that of the test specimen and has a minimum length equal to three times its diameter plus one inch for the initiating cap. The reaction velocity is measured using a resistance wire probe inserted inside and along the length of the container. Propagation of the explosive reaction is determined by examination of container damage or interpretation of the reaction velocity profile. Critical data are reported as the largest sample dimension which showed no evidence of propagating an explosive reaction through the sample material. A typical test set up is shown in figure 18.

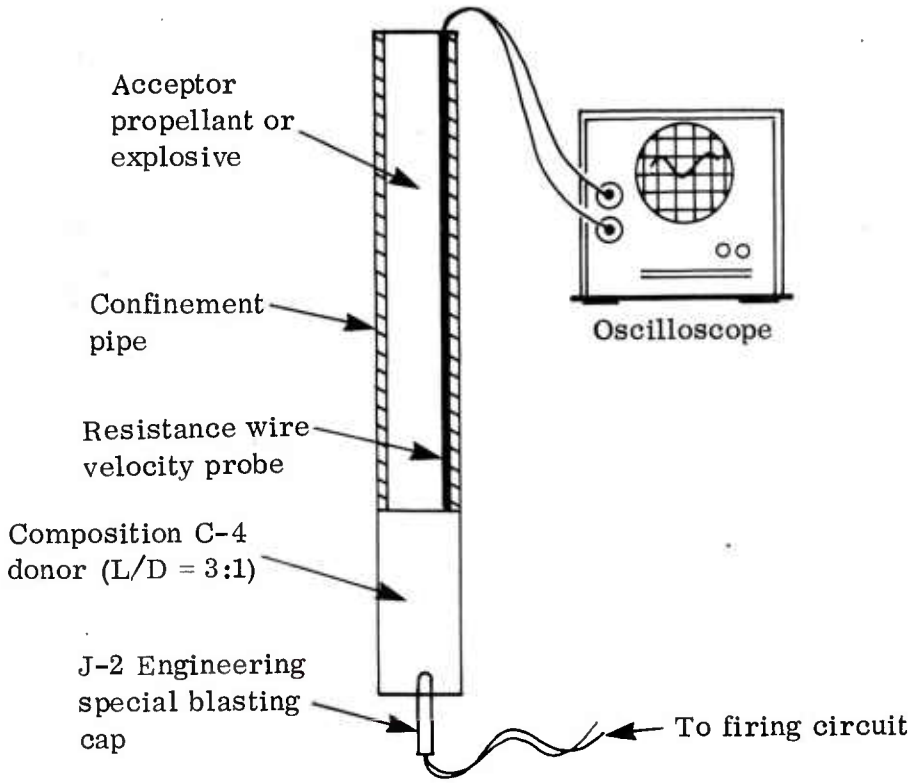

Figure 18. Critical Diameter Test Set Up

Critical Height

In the critical height test, the sample material is subjected to submerged flame initiation to determine if the material reacts explosively in varying degrees of confinement. Testing is generally conducted using schedule 40 black seamless steel pipe open at one end. Test variables include the pipe length and diameter and material height within the pipe. Flame initiation is provided by a 12 g bag igniter consisting of FFFG black powder and an Atlas Match. The reaction velocity is measured using a resistance wire probe inserted inside and along the length of the container. Determination of an explosive reaction occurrence is based upon visual assessment of the container damage or interpretation of the reaction velocity profile.

Critical height to explosion data are reported as the greatest material height tested in a given container diameter which did not result in transition from burning to an explosive reaction during any of three or more trials at that level. A typical test set up is shown in figure 19.

TNT Equivalency (High Explosive Equivalency)

High explosive equivalency determines the ratio of the amount of energy released in a detonation reaction of a sample material to the amount of energy released by a high explosive under the same conditions.

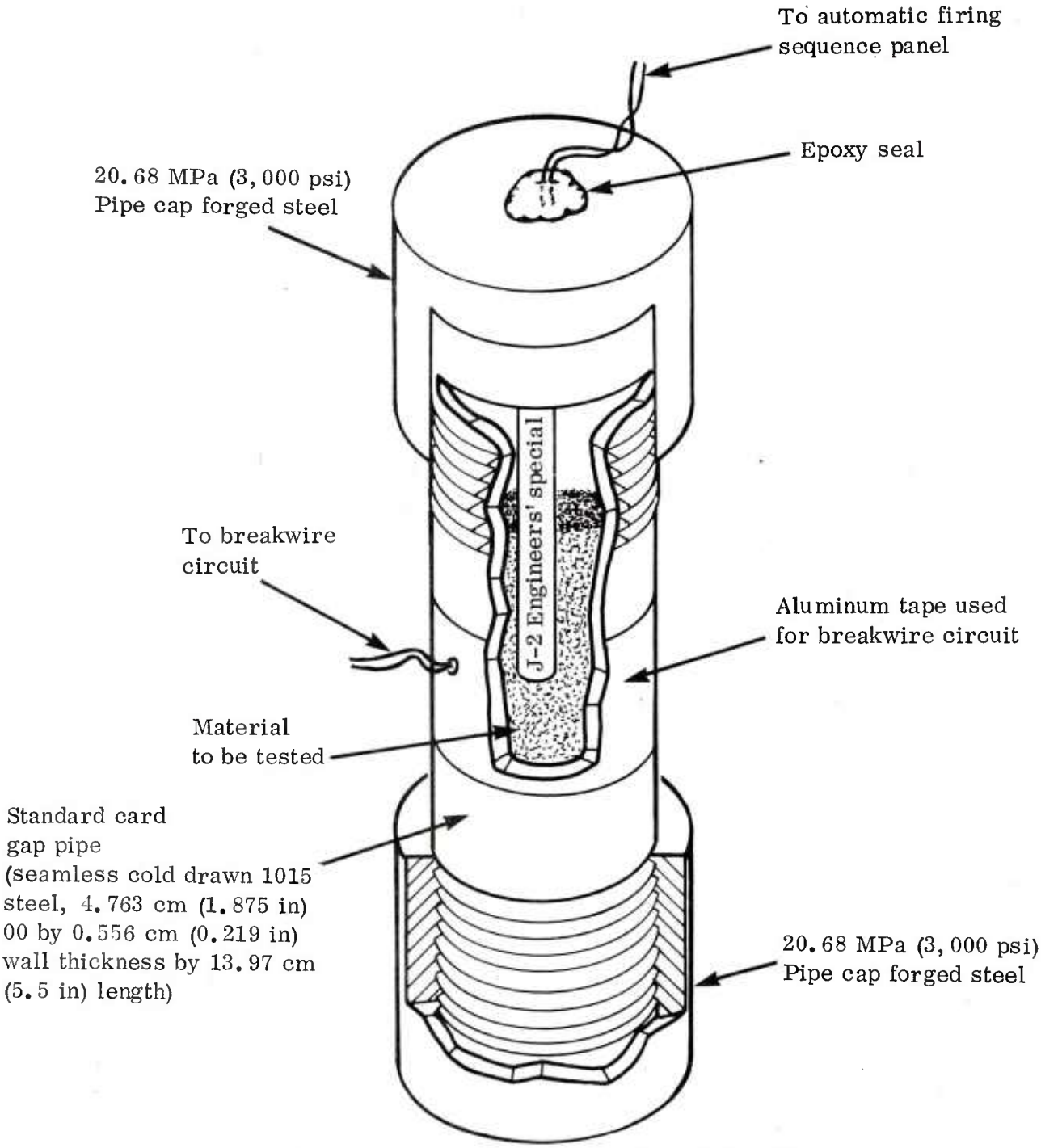

Figure 20. Pipe Bomb Configuration TNT Equivalency

Hemispherical Surface Burst Method

In this method the sample material in various charge weights and configurations is tested in a hemispherical surface burst configuration. Twelve pressure transducers (6 on the even and 6 on the odd gage line) are placed in two 90° arrays. The material is initiated by a number J2 engineers' special blasting cap and a one to two percent booster charge. A minimum of three tests are performed for each charge weight and configuration.

Tests are usually conducted in various manufacturing and transportation configurations. The maximum output from detonation in terms of airblast overpressure and positive impulse are compared to known characteristics of a hemispherical surface blast of TNT. The charge placement is shown in figure 21 and the transducer placement is shown in figure 22.

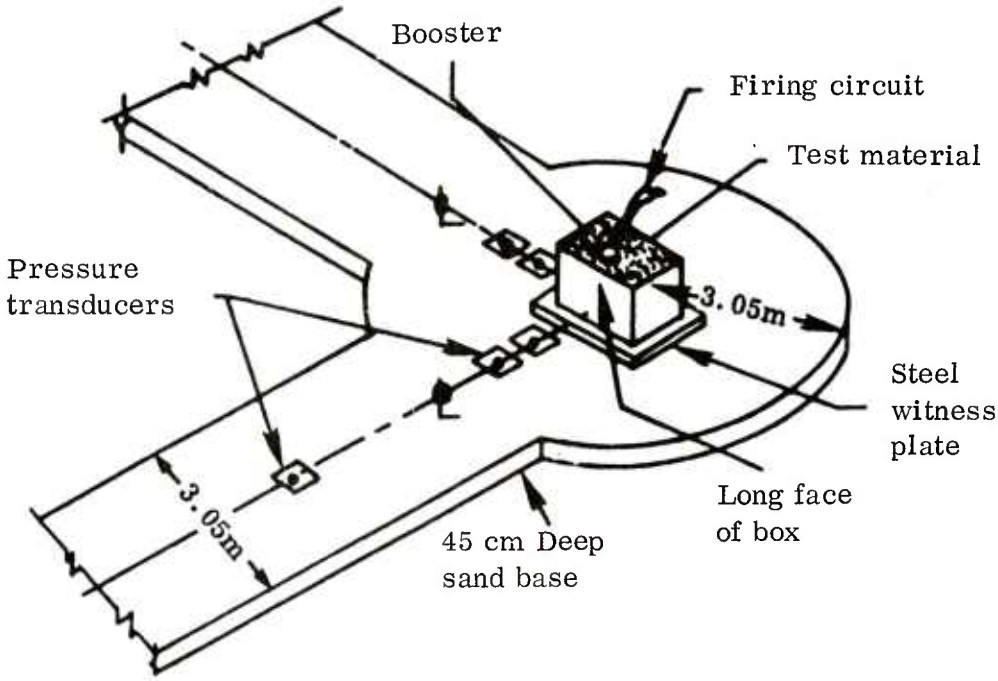

Figure 21. Typical Charge Placement for Equivalency Tests

The sample material is placed in the appropriate container to simulate the given process or shipping scenario. The charge weight is recorded and scaled distances of 1.19, 1.59, 2.14, 3.57, 7.14 and 15.87 m/kg$^{1/3}$ (3, 4, 5.4, 9, 18 and 40 ft/lb$^{1/3}$) are held constant during the test series. The test charge is placed on a steel witness plate whose dimensions are at least 10.16 cm (4 in) greater than the container and at least 1.27 cm (0.5 in) thick. A conically shaped booster charge weighing 1% and 2% of the charge weight of composition C4 is placed atop the sample material and initiated by a J2 engineers' special blasting cap. Peak pressure, positive impulse, time of arrival, and fireball diameter and duration data are compared to standard reference data in the same configuration. Scaling as a function of the cube root of the charge weight is also determined.

PERFORMANCE TESTS

Performance tests are the broadest category of tests that cover specific application of the intended use of the material. Generally, these tests cover those situations which may or may not be encountered by other forms of testing. Primarily, they are distinguishable by the fact that they verify the intended performance of a given material.

An attempt at identification of discrete test methods and categorization for the sake of convenience and economy, while desirable, is not always practical because test methods

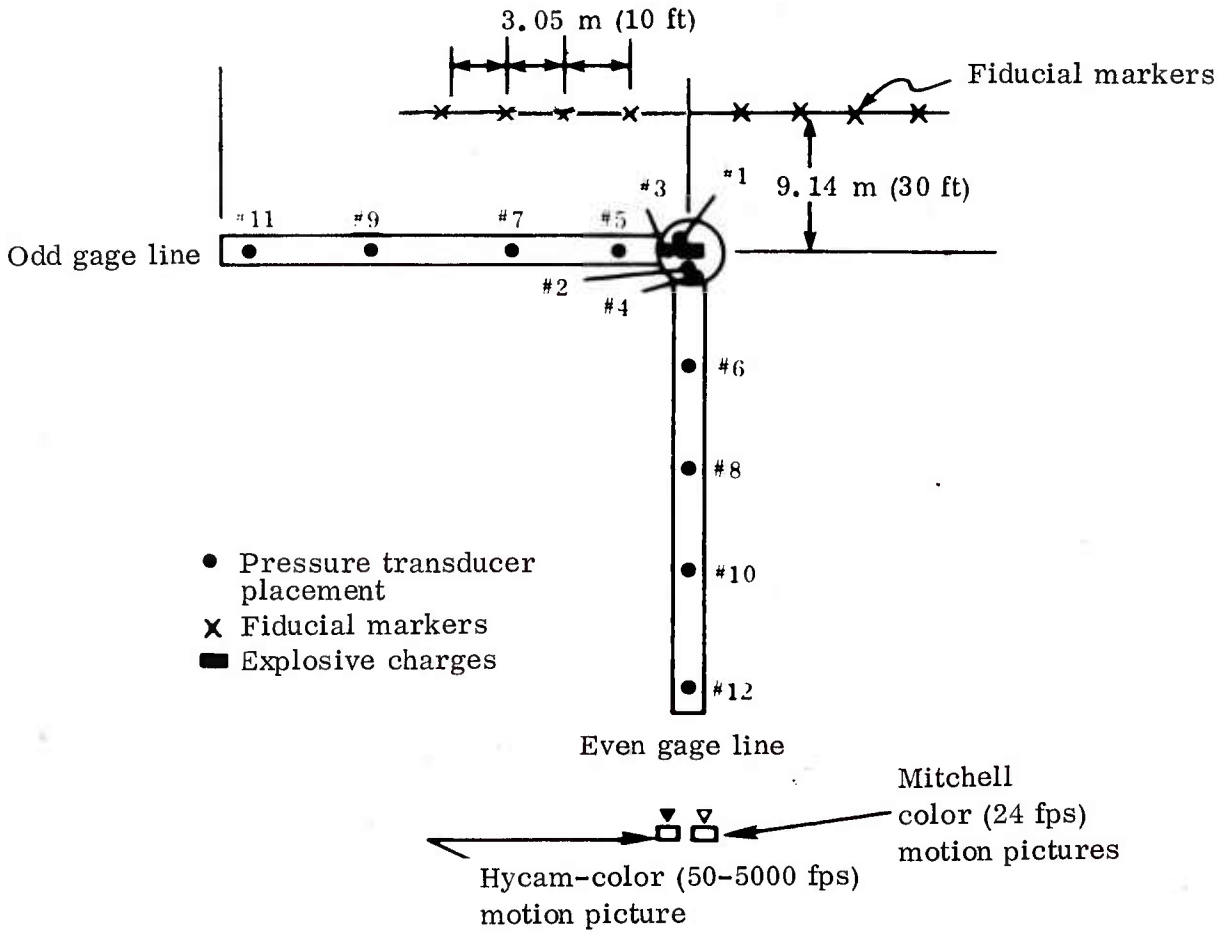

Figure 22. Instrumentation Placement for TNT Equivalency

do, in fact, overlap into another category. Although one might prefer to run every known test before safety parameters are established, it becomes too costly; thus, the ultimate goal is to classify a suspect material with a minimum number of tests that provide the desired empirical evidence, so that the hazardous characteristics of a given material can be postulated with a high degree of moral certitude.

The tests outlined in this publication are by no means all of the tests that have been conducted on pyrotechnic mixtures. Each testing agency has its own set of special tests it prefers to perform. To differentiate between these test methods is not the purpose of this document. Rather, the most data concerning pyrotechnics were available on the test methods described here.

CLASSIFICATION AND COMPATIBILITY

BACKGROUND

Classification of a hazardous material is based upon its reaction to standardized externally applied energy sources. The output reactions (mass detonation, fragmentation hazard, en masse fire hazards, and those components which present no significant hazards) are used to establish quantity distance criteria for safe handling, storage, and transportation. This systematic arrangement into groups or categories emphasizes the safety criteria for each distinct type of hazardous material.

Currently, the criteria for classification of a hazardous material is accomplished in accordance with TB 700-2, Change 1, 1968[4]. This document describes the test methods for both bulk and end item munitions. The prescribed initiating influences are limited by discrete test methods that include card gap, detonation test, ignition and unconfined burning, impact sensitivity for bulk mixtures, detonation tests A and B, and external heat test C for end item munitions.

CLASSIFICATION OF A BULK MATERIAL

Primarily, classification of a bulk material falls into one to two categories, either mass detonating or mass fire hazards. This is shown diagrammatically in figure 23.

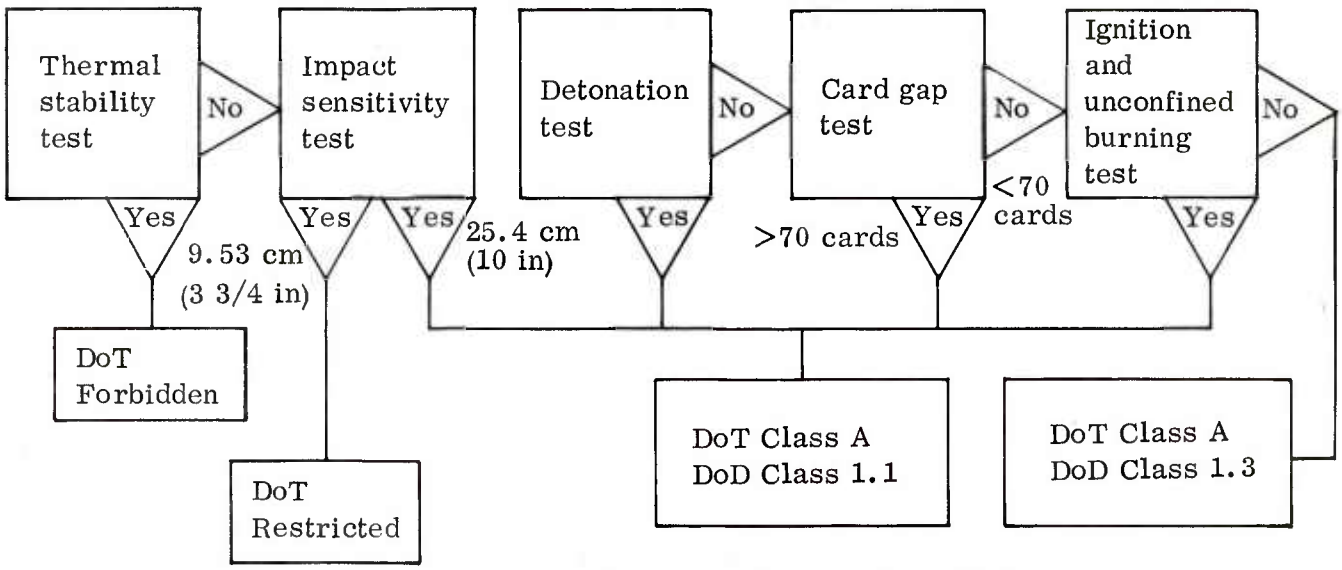

Figure 23. Interpretation of Results per TB 700-2

As shown on the diagram, a failure such as decomposition, discoloration, a significant loss in weight, or an explosion results in prohibiting the shipping of this sample material by commercial carriers.

An explosion where the sample material is impacted by a 2 kg (4.41 lb) weight at a 9.53 cm (3.75 in) drop height constitutes a DoT restricted material and can only be shipped or transferred interplant with special permission.

An explosion at 25.4 cm (10 in) drop height on the impact apparatus, evidence of detonation in the card gap with greater than 70 cards, an explosion from the detonation test, and explosion as a result of the ignition and unconfined burning test constitutes a military class 7, DoT Class A, or a UN classification of 1.1. Thermal stability results have no significant bearing on the outcome of a material being placed in this category.

Negative results must be obtained from thermal stability tests, detonation tests, and ignition and unconfined burning tests in order for a material to fall into the DoD Class 1.1 or DoT Class C. A positive reaction or detonation with a card gap value of less than 70 cards will still allow for a material to remain in this category. Impact sensitivity results have no significant bearing on the classification of a given material.

Classification of intraplant processes is usually exempted from this form of classification testing and falls under an interim qualification usually dictated by the processing or handling technique. Usually, a bulk pyrotechnic mixture is considered as a DoD class 1.1 during mixing, screening, sieving, and filling operations, but is usually considered as a DoD class 1.1 once it has been consolidated. In any event, interim qualification is handled separately from the standard classification procedure.

TB 700-2 as the standardized document for classification of hazardous material has been criticized greatly and deemed inadequate by many simply because it provides qualitative information versus quantitative data. Misunderstanding of the purpose of this document and misinterpretation of the results would provide some validity to those critics; however, if used correctly, precise interpretation of results in these tests does in fact provide the distinction between mass detonation and fire hazards only. Not only is this objective achieved, but it is done very economically and in a rather short time frame. The tests, as they are outlined in this document, lend themselves to easily deducible conclusions, easily recognizable by all to provide definitive results.

Experience in performing these tests as outlined in TB 700-2, as well as performing a series of tests that provide quantitative values, have not altered the fact that the classification assigned by TB 700-2 has changed as the result of some other test method.

If there are valid criticisms of the current classification procedure, they could lie in the fact that current test methods do not include additional forms of stimuli, nor do they allow for the measure of degree of hazard such as TNT equivalency. Both of these criticisms are being corrected in the latest revision to this document.

END ITEM CLASSIFICATION

End item classification is predicated upon results of items in their shipping containers and is performed on single and multiple shipping containers. The detonation test A is performed on a single end item or a single shipping container, and damage to an adjacent round or damage external to the shipping container constitutes a failure and requires that the detonation test B be performed. Detonation test A is primarily concerned with intrapropagation within the single shipping container.

Detonation test B is performed when intrapropagation within a single container and/or damage to the outside of the single packaging container occurs. The objective of this test series is to determine if interpropagation between containers occurs.

The external heat test C is conducted on all end items utilizing a multiple stack of munitions that afford confinement. Emphasis is placed upon whether the munition explodes causing fragmentation or whether the reaction remains contained within the pyre. Interpretation of results is shown in the diagram in figure 24.

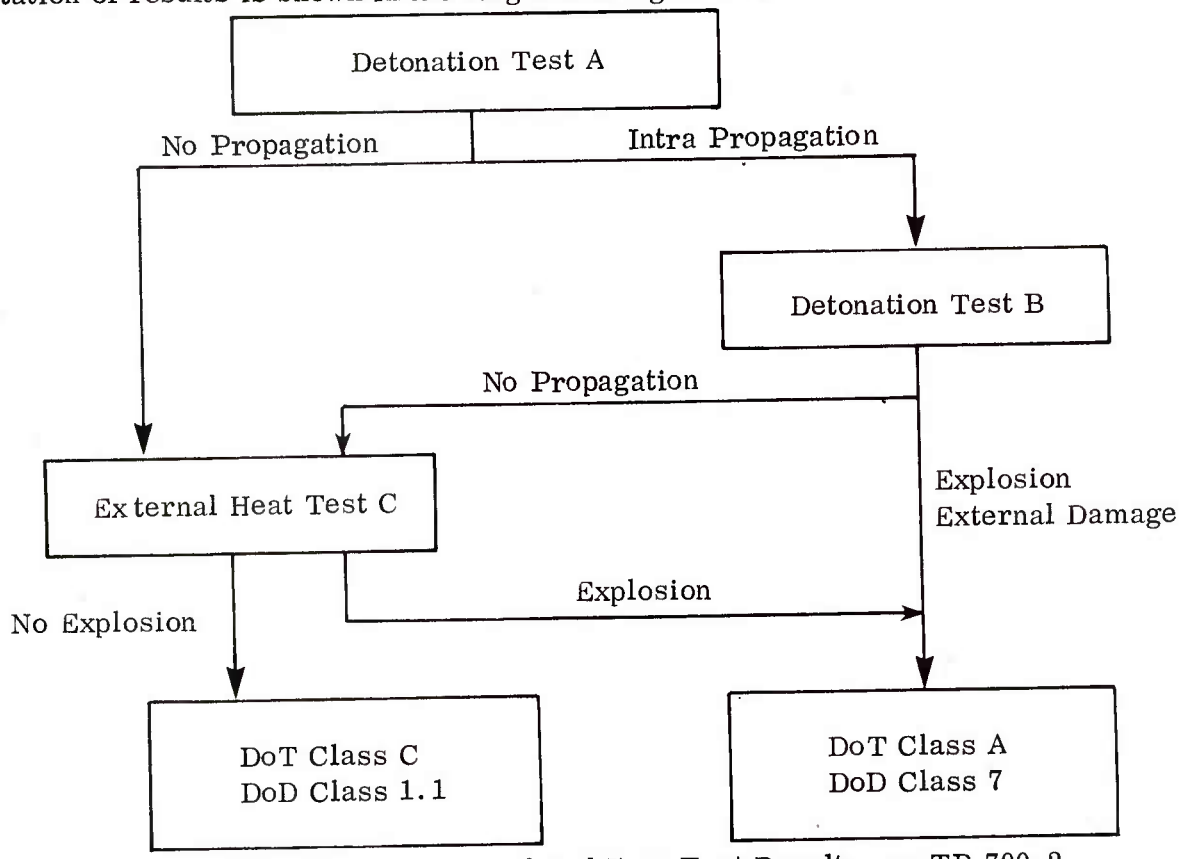

Figure 24. Interpretation of End Item Test Results per TB 700-2

COMPATIBILITY

Classification tests determine the quantity distance relationship for specific types of ammunitions. This is established by the level of risk considered acceptable for stipulated exposures. However, these tests or results do not determine the compatibility of storing groups of munitions that may be stored together. This function of assigning an alpha term for storage compatibility is set forth in other documents.

The factors that determine compatibility grouping are as follows:

1. Effects of the explosive item - mass detonating versus fire hazards only and/or fragmentation
2. Rate of deterioration
3. Sensitivity to initiation
4. Type of packing
5. Effects of fire involving the end item
6. Quantity of explosive per unit

PYROTECHNIC SYSTEMS

The science of pyrotechnics consists of those technologies closely related to explosives and propellants which, when functioning, become mixtures that react ordinarily at observable rates with the formation of solid residues. Pyrotechnics are usually solid mixtures consisting of a fuel-oxidizer with additives such as binders, intensifiers and/or retardants that are capable of reacting in the absence of air. Pyrotechnic mixtures are considered to be progressive burning devices with relatively slow rates of reaction (when compared to propellants or explosives) with the terminal effect of light, heat, smoke, gas production, or sound resulting from an exothermic oxidation-reduced chemical reaction. Pyrotechnic mixtures are considered low explosive devices that have little or no explosive value because of their low rate of combustion and the liberation of relatively small amounts of gas per unit weight. The susceptibility to initiation or the ease at which a pyrotechnic reacts to an externally applied energy is usually less than that required by explosives or propellants.

A more precise definition of pyrotechnics is offered by Ellern[6].

> "Pyrotechnics is the art and science of creating and utilizing the heat effects and products from exothermically reacting, predominantly solid mixtures or compounds when the reaction is, with some exceptions non-explosive, and relatively slow, self-sustaining, and self-contained."

Exceptions to the above definition are citable but in such cases the purpose of the reaction classifies the item into one or more of the other related sciences. Table 1 depicts some of the characteristics of propellants, explosives and pyrotechnics.

TABLE 1. A COMPARISON OF SOME OF THE CHARACTERISTICS OF PYROTECHNICS, PROPELLANTS, AND EXPLOSIVES.

System	Type of reaction	Type of ingredients	Reacted byproducts	Ease of initiation	Requires oxygen	Output	Rate of reaction	Brisance
Pyrotechnics	Progressive burning	Solid	Solid residue some gas	Minimum to moderate	No	Flame/glow, Gas pressure, sound flash	Slow	Minimum
Propellants	Propagative burning	Liquid and/or solid	Gas some residue	Moderate	Yes	Gas pressure	Rapid	Moderate
Explosives	Adibatic compression	Liquid and/or solid	Gas	Maximum	Yes	Extreme heat and pressure	Extremely rapid	Maximum

The combustion of a pyrotechnic mixture is the sum total of many exothermic and endothermic reaction processes with their accompanying physical properties of heat transfer. The heat liberated per gram from the reaction of a balanced system is the sum of the heats of formation of the reacted products minus the sum of the heats of formation of the

initial components divided by the total weight of the reacting materials. A division of the actual overall combustion process is made by separating the reaction into a condensed phase and a flame phase. The condensed phase includes the solid solid/liquid phase, while the flame phase is comprised of the gaseous phase and the final action zone with the solid residue. In the condensed phase, the reactions are endothermic or weakly exothermic and are greatly affected by outside forces and composition effects. In the gaseous phase, the reaction is highly exothermic and is less affected by outside forces. A profile of the reaction process is shown in figure 25.

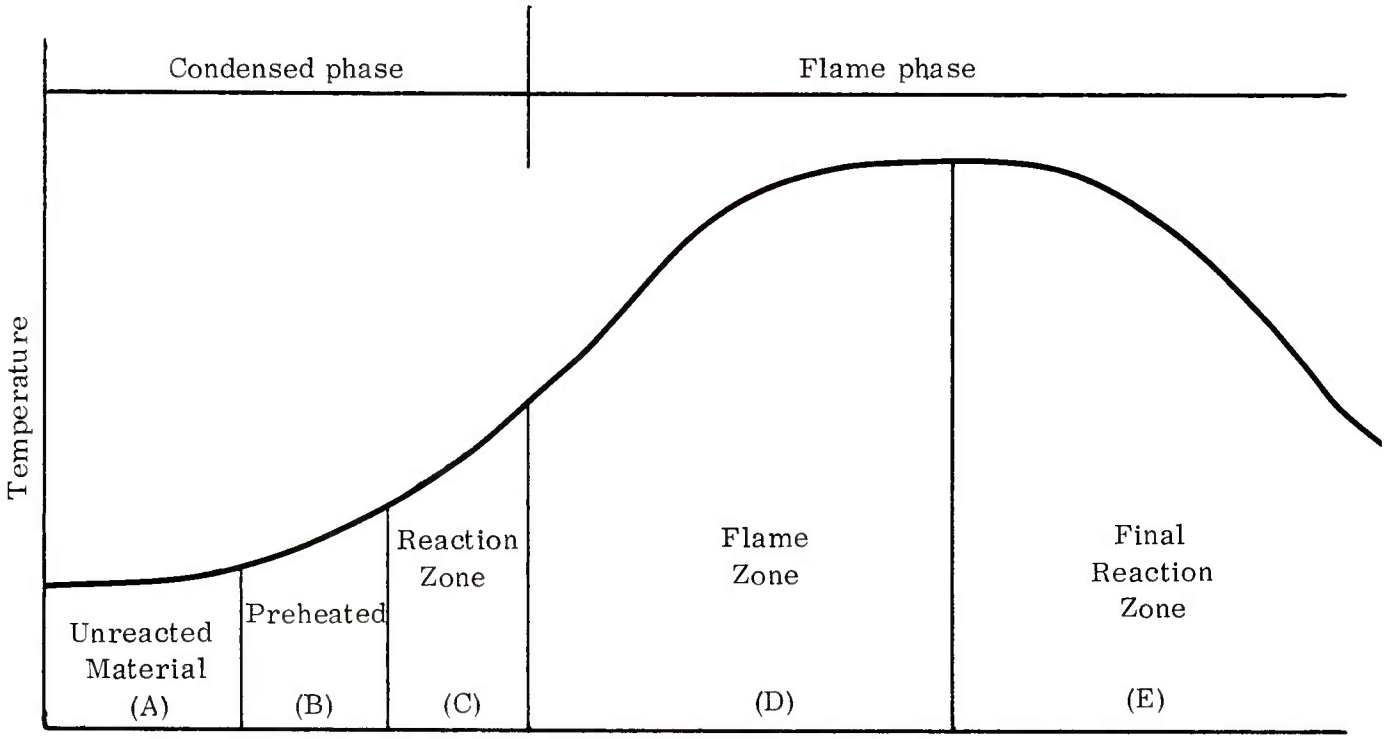

Figure 25. Profile of Reaction Process for Pyrotechnic Reactions

In a static condition (stoichiometric system), the reaction proceeds at a linear burning rate unaffected by certain mechanical variables or by any excess ingredient variables. The reaction profile consists of unreacted material zone, preheated zone, reaction zone, gaseous flame zone, and final reaction zone. The unreacted material zone is a solid-solid phase which is unaffected by outside parameters. The preheated zone is a solid-solid phase whereby heat transfer is noted and results in elevation of the composition temperature. The reaction zone of the condensed phase represents the solid-liquid phase where melting and thermal decomposition of the oxidizer and the high absorption of the flame phase occur. The flame phase is where the highest temperatures occur and the reaction is primarily gaseous. In this last stage of combustion, atmospheric conditions aid in oxidation. With this addition, the total caloric output is enhanced. The final phase of reaction is the final reaction zone where the flame phase species combine to form stable oxides which lower the temperature of the final reaction products.

Physically, pyrotechnic mixtures are homogeneous mixtures of finely powdered elements and compounds which have been consolidated for ultimate use. The most

important ingredients of a pyrotechnic are the fuel and oxidizer. To these are added other materials to produce the color, intensify the color, and act as retardants, binders and waterproofing agents. Various types of pyrotechnic mixtures are shown in figure 26.

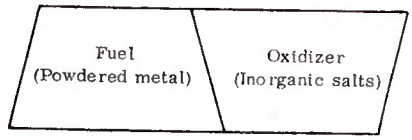

26a. A basic pyrotechnic mixture

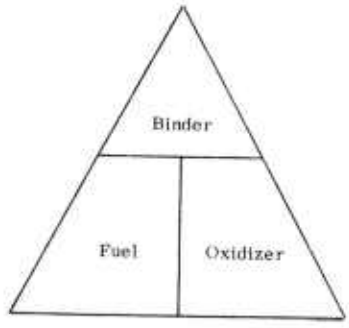

26b. A simple pyrotechnic mixture

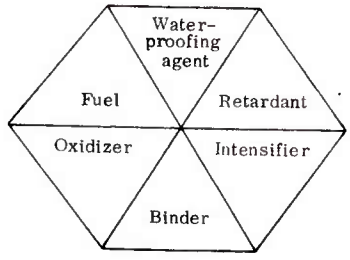

26c. A complex pyrotechnic mixture

Figure 26. Typical Pyrotechnic Mixture (not shown in proportion of any specific mixture)

The fuels most commonly used are powdered magnesium, aluminum (and alloys thereof), boron, charcoal, sulfur, lactose silicon, zirconium, titanium, and metallic hydrides. When these substances are finely powdered, they readily undergo an exothermal oxidation with the formation of corresponding oxides and the evolution of heat and radiant energy. Additives such as intensifiers, binders, or waterproofing agents may also act as a fuel if they are combustible.

Oxidizing agents are substances in which oxygen is available at high temperatures, and include the salts of nitrate, perchlorates, oxides, peroxides, chromates, and chlorates. The major oxidizing agent is usually selected for terminal effect such as the desired color of light, luminous intensity, and burning rate. The oxidizers must supply sufficient oxygen for combustion of most of the fuel in the composition.

Intensifiers are utilized to produce specific spectral emission in pyrotechnic flames. Generally, they are chlorinated organic compounds that are not hygroscopic or incompatible with the metal fuels. Common intensifiers include hexachloroethane, hexachlorobenzene,

polyvinyl chloride, dechlorane, chlorinated waxes, rubbers, and plastics. They readily decompose during combustion and form metallic chlorides which emit specific color bands in the flame spectrum. The portion of the intensifier, other than the chlorine, acts as part of the fuel. Certain intensifiers may also act as binding agents and/or as retardants.

Retardants are materials used to reduce the burning rate of the fuel-oxidizer mixture with a minimal effect on the desired output or terminal effect. They may be an inert diluent or contribute to the reaction, usually at a much slower rate than the fuel. They are inorganic salts, plastics, resins, waxes, or oils. They may be multipurpose to the system by also acting as the binding agents, by waterproofing, and in some cases serving as intensifiers.

Binding agents are used to prevent separation of the fuels and oxidizers and to obtain a more homogeneous mixture. They also serve as adhesives when the pyrotechnic mixture is consolidated. Binders have an effect upon the output of the mixture and must be selected with care. They can serve a dual purpose as an intensifier or as a retardant. Typical binders are epoxies, resins, oils, waxes and ethyl or nitrocellulose. They can also be used to desensitize a mixture that would otherwise be extremely sensitive to friction or shock.

Pyrotechnic materials are generally considered to be hygroscopic. Therefore, certain metals used as fuels may produce undesirable effects upon becoming moist. Hence, waterproofing agents are employed as coatings on the metallic fuels. Waxes, resinates of metal, and natural and synthetic resins are widely used. Many waterproofing agents are also used as binders.

The burning rate and products of combustion of a pyrotechnic mixture are affected by physical, chemical, and mechanical parameters. The physical elements are environmental, such as temperature, pressure, and humidity. The chemical elements are variations in individual components of the system. Mechanical elements include the degrees of confinement, case and loading densities. Various studies have shown the most important factors to be the burning surface area, density, and granulation or particle size of the components, as well as purity and packaging. All of these factors will contribute significantly to the terminal effect of the device.

A change in the area of the burning surface has a significant effect on the characteristics of a pyrotechnic mixture. An increase in area causes the material to be sensitive, increases the rate of reaction, and, in the case of light, increases the total candlepower.

Density (degree of consolidation) changes the characteristics of a pyrotechnic mixture. An increase in density is directly proportional to the burning time and inversely proportional to the degree of sensitivity and performance characteristics.

Granulation or particle size inversely affects the sensitivity, burn rate, and color intensity, and is directly proportional to the luminous intensity. Particle shape (flaked, spherical, or atomized) generally gives the same effect as granulation or particle size.

Impurities usually affect the output characteristics such as color or intensity of light rather than the burn rate or sensitivity. Still, pyrotechnic ingredients should be maintained within well-defined limits for reproducibility of results.

The type of case into which a pyrotechnic mixture is loaded does effect the burning time. A metal case versus a cardboard case results in an increase in candlepower. Other types of cases such as plastic, bakelite, or cellulose acetate produce varying effects that may or may not increase or decrease the candlepower.

Confinement affects the performance characteristics of pyrotechnic mixtures because of gas pressure that can be generated due to heavy confinement versus no confinement. Additionally, a pyrotechnic mixture has been known to explode when confined too heavily. Confinement increases the burning rate and decreases the the candlepower.

Other effects in performance characteristics include spinning effects, voids, slag formation, venting, and broken or cracked mix once the item is consolidated and dependent upon the pyrotechnic under consideration. In every case, the effects cited above are not invariable or equally pronounced for all mixtures.

Pyrotechnics are divided into functional groups and are classified by their reactions, effects, or products they produce. Table 2 shows the different groups, functions, and types. By placing pyrotechnics into functional groups, the phenomena associated with each grouping can be more clearly understood.

Each pyrotechnic group will be discussed separately.

TABLE 2. FUNCTIONAL GROUPING OF PYROTECHNIC MIXTURES

Groups	Function	Types
Initiators	Electrical	Detonators Squibs
	Mechanical	STAB primer
		Percussion primers
		Friction primers
		Nonelectric detonators
Illuminants	Flares	Parachute
		Trip
	Signals	Colored
		White
	Photoflash	Spotting
		Tracking
		Aerial photography
	Tracers	Spotting
		Tracking
		Smoke
		Armor piercing & incendiary
Smoke	Screening Signal Tracking & acquisition	White/black
		Colored
Gas		Pure
		High pressure
Sound	Simulators	Single report
		Whister
Heat		First fires
		Igniter mixtures Starter mixtures Incendiaries
Time	Gasless Black powder	Unvented Vented

INITIATORS - PRIMERS/DETONATORS

Noun	Types	Use
Electrical	Detonators	Used for the detonation of explosives
	Squibs	Electric primers used for the initiation of pyrotechnics and propellants
Mechanical	Stab primers	Primarily used for initiating detonation where the available energy is small
	Percussion primers	Initiation of explosives, propellants and pyrotechnics
	Friction primers	Initiation of pyrotechnics and other combustible materials
	Non-electric detonators	Used for the detonation of explosives

BACKGROUND

Initiators are devices used as the primary stimulus component in all explosive, propellant or pyrotechnic mixtures such as primers, detonators or squibs. Initiators are energy transducers that convert mechanical or electrical energy into explosive (chemical) energy. Initiators usually contain a small amount of sensitive primary explosive or non-initiating explosive which readily progresses from a deflagration to a detonation based upon the percentage and type of explosive used. The percentage of explosives used varies with the type of initiator. Basically there are two types of initiators, primers and detonators.

Primers serve as the first element in an explosive train. They contain a small amount of sensitive primary explosive which produces a relatively small explosive output. The percentage of primary explosive varies depending upon the type of primer. Primers can be both electrically or mechanically initiated. A squib is an example of an electrically actuated primer. Mechanically actuated devices include: stab, friction, and percussion primers. Primers differ from detonators in that the output, in terms of an explosion, are small, or a deflagration occurs so that such devices will not reliably initiate a secondary high explosive charge.

Detonators are small sensitive explosive components which are capable of reliably initiating high order detonations in the next higher explosive element in an explosive train. They can be initiated by either mechanical or electrical energy, or by the output of a primer. Detonators usually contain three basic charge elements; initiating mixture, priming charge, and base charge. The initiating mixture is heat sensitive, may be an electrical conductive mixture, and/or an impact sensitive mixture. It is the primary energy conversion source from the initial stimuli. The output is heat which is transferred to the intermediate

charge. The intermediate charge is usually a primary explosive, such as lead styphnate, lead azidide, or a mixture of the two, and transfers its energy to the base charge. The base charge is usually a secondary explosive which produces a detonation as its output. This energy is transmitted to the next element in the explosive train.

Initiators are classed according to the nature of the input stimuli, either mechanical or electrical, and according to their output characteristics as primers or detonators.

Mechanical devices are categorized primarily by their external initiation mechanism: stab, friction and percussion primers, and non-electric detonators. Stab primers are actuated by a sharp pointed firing pin which punctures the cup and are used primarily for initiating detonations. Percussion primers use a blunt firing pin which does not puncture the cup. This makes them useful for many applications such as initiation of explosives, propellant igniters, pyrotechnic delay trains, and ejection cartridges. Friction primers are devices that produce flash or flame by the friction of sliding one part of the unit against a primer mixture. Non-electric detonators are similar to electric detonators except that they may be initiated by stab or percussion primers, delay element, pyrofuse, or primacord.

STAB PRIMERS

Stab initiators are small, thin-walled cups filled with a small amount of a highly sensitive mixture and covered with a very thin closure disk to prevent moisture or contamination from entering the device. The closure disk is crimped into place. A typical device is shown in figure 27. The mixture consists of an oxidant, a fuel, and/or a primary explosive. It may or may not contain additional additives. The amount of primary explosive varies from 5% to 70% depending upon the device's intended use. The primary explosive also controls the sensitivity of the mixture. Generally, the sensitivity of the device is such that only a minimum energy is required for initiation. The amount of energy that is transferred by the firing pin is several hundred millijoules, but that transfer is a highly concentrated heat which causes ignition of the mixture. The output of the device is flame, pressure, hot gasses, and slag. Since the firing pin punctures the cup, gases escape at both ends of the cup making it impractical for use in a closed system. Stab devices are used primarily where mechanical energy is small.

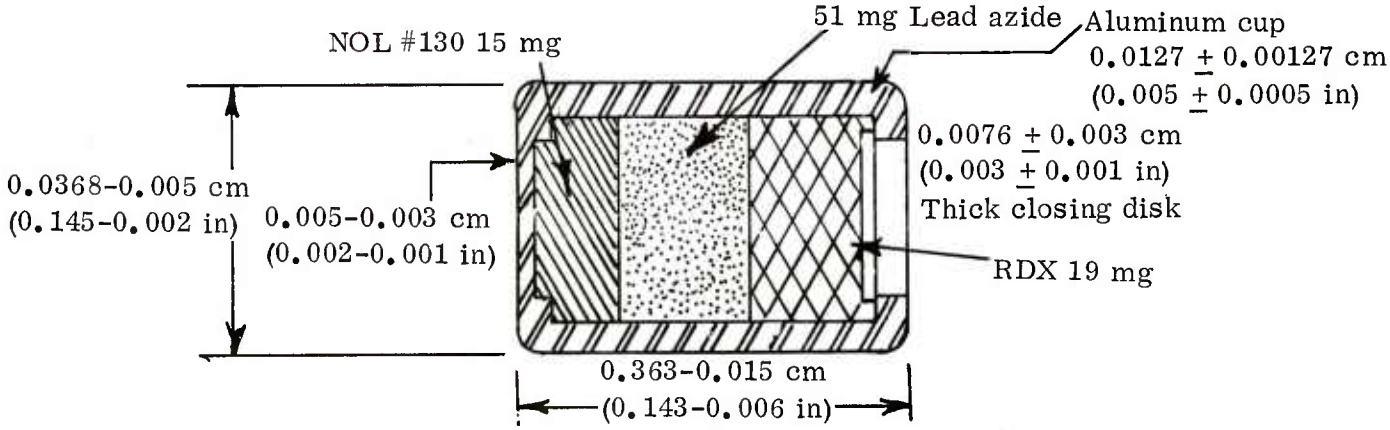

Figure 27. M55 Stab Detonator

PERCUSSION PRIMERS

The cup of the percussion primer is constructed from materials similar to those of a stab device except that two additional elements are used. The cup is filled with the desired amount of mixture and a paper disk is inserted for sealing. A curved metal insert, called an anvil, is placed atop the paper disk. This promotes the exertion of the crushing force between the cup and anvil when the cup is dented by the firing pin. The primer cup is required to be leakproof in such a way that no gas can escape except through the opening in the cup, even under severe pressure. This allows the gases formed by the reaction to be confined and in turn increases the efficiency of the fire transfer. A typical device is shown in figure 28. The mixture is composed of an oxidant, a fuel, and/or a primary explosive. The inorganic fuels and oxidizers are used for increased output. Some formulas contain a secondary high explosive such as TNT. The formulas may or may not contain additional additives. The amount of primary explosive varies from 5% to 65%. The amount of secondary explosives is approximately 5%. The output of the device is flame, hot gases, and pressure. Percussion primers used to ignite pyrotechnic mixtures have a low brisance so as to not break up the pressed mixture. Percussion primers are more versatile than stab devices and are used where a more efficient fire transfer is desirable and a low or high brisance output is required in a closed system. Percussion primers require more mechanical energy for initiation than do stab devices.

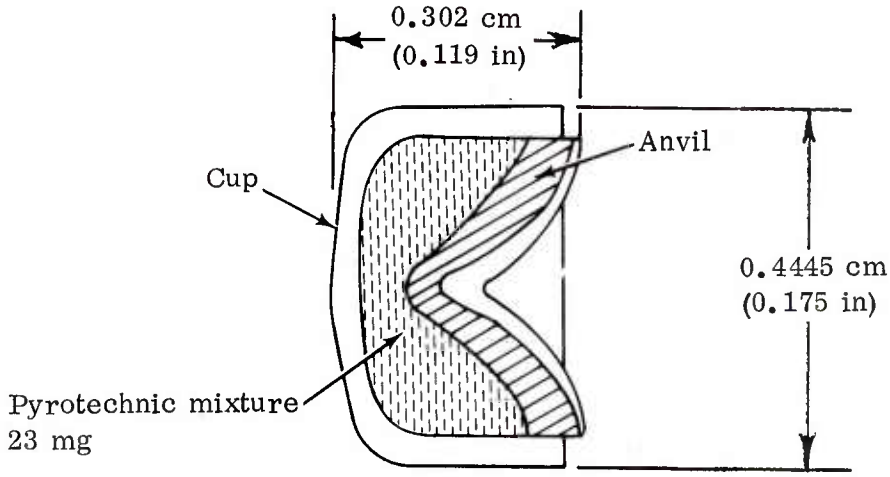

Figure 28. M42 Percussion Primer

FRICTION PRIMERS

Friction primers differ from both the stab and percussion primers in that: (1) they are almost always composed solely of pyrotechnic ingredients; (2) they are generally made up of two parts - the flame-producing component (primer mixture) and the friction or striker component; (3) they have no brisance, as the output is primarily flame and glow; and (4) the stimulus is caused by friction, not impact. The primer mixture contains an inorganic oxidant, fuel, and additive to produce the desired output and a binder to hold the ingredients together. Friction primers are considered to be hygroscopic and will not function when they become damp. The output from a friction primer is flame and gases, although some devices can be made to provide only a glow or a spit of flame.

NON-ELECTRIC DETONATORS

Non-electric detonators are constructed from similar materials as an electric detonator and, for all practical purposes, they are internally the same as an electrical detonator, except for the method of initiation. They are used to initiate secondary high explosives when an electric current source is not readily available or practical (figure 29).

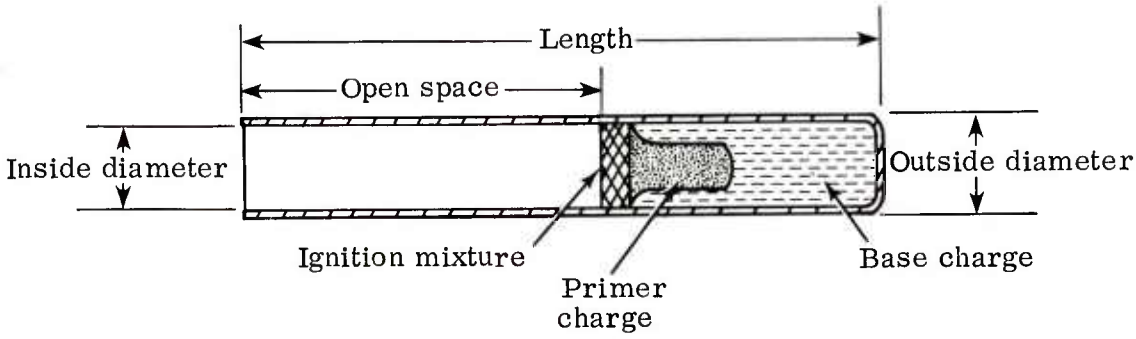

Figure 29. Typical Non-electric Detonator

ELECTRICAL DETONATORS

Electrical devices are categorized primarily by their initiation mechanism: hot wire bridge, film bridge, exploding bridge wire, conductive mixture, and spark. They differ from other initiators in that the initiation mechanism is an integral part of the system. Because of this fact, the input sensitivity required for initiation varies with the type of device, but it can be controlled precisely over a wide range from values of less than one erg to values greater than several hundred thousand ergs. Input sensitivity varies sharply with the type of device and it must be considered separately in each case. Figure 30 shows the various types of electrical initiator devices.

Squibs are electrical primers which are constructed identically to electrical detonators. That is, they contain a flash charge and a secondary charge which ignites the next element in a fuze train. The secondary charge may contain black powder or a similar material. Squibs are generally bridgewire devices designed similarly to hot bridgewire initiators. The output from a squib includes hot gases, hot particles (slag), a pressure pulse, and thermal radiation. A typical squib is shown in figure 31. The output from a squib may not generally be used to induce a detonation in the next element of a fuze train.

Output from electrical detonators is intended to induce a detonation in the next element in a fuze train. Its output is a shock wave and high velocity fragment from its case. The nature of detonators is beyond the scope of this study; except when data are available on the flash charge and/or primary charge, it is reported. Most useful data on detonators can be obtained from references 7 and 8.

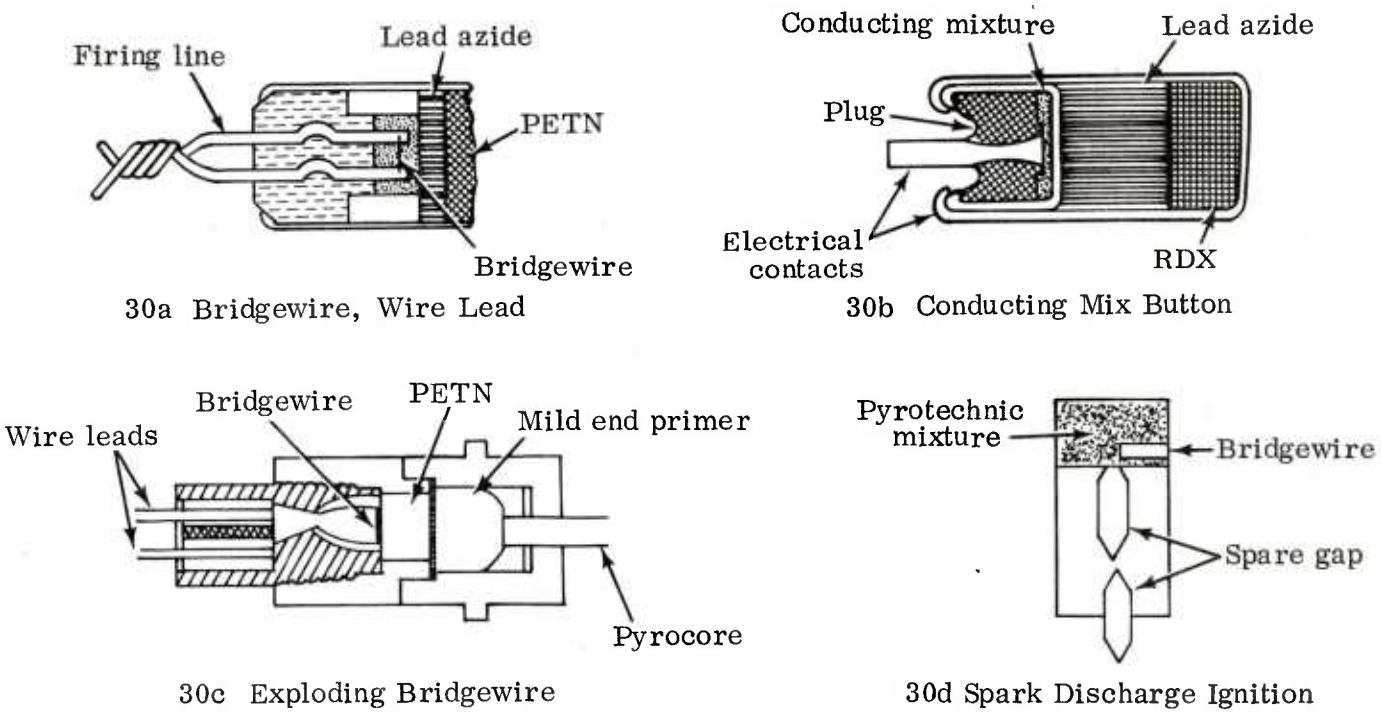

Figure 30. Typical Electrical Initiating Devices

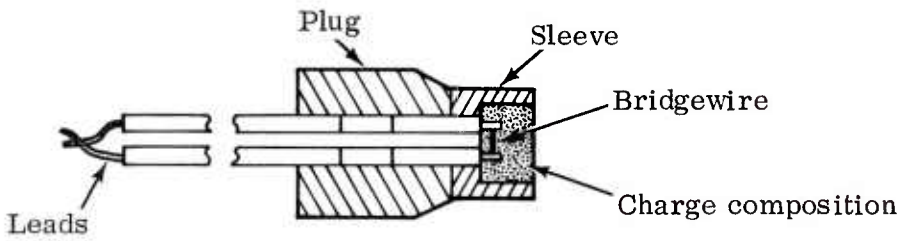

Figure 31. Typical Electrical Squib

DATA DISCUSSION

Stab Primers

The formulas of typical stab primer mixtures are shown in table 3. The common ingredients include: oxidizers (potassium chlorate, barium nitrate, and lead oxide); fuels (lead thiocynate, antimony sulfide, calcium silicide, and carborundum); and primary explosives (lead azide, lead styphnate, and tetreacene). The amount of primary explosive varies from 0 to 65%. Usually, in those formulas containing lead azide or lead styphnate, the percentage of primary explosives varies from 30 to 40%. Tetracene, when found in the mixture, is used to control the sensitivity. The amount of oxidizing agent varies from 20 to 53%. The amount of fuel varies from 15 to 55%. The fuel/oxidizer ratio varies from a low of 0.37:1 to a high of 1.22:1. The fuel/oxidizer ratio varies inversely proportional

to the amount of explosives in the formulation. Stab primer mixtures are not stoichiometrically balanced, being primarily oxygen deficient.

TABLE 3. TYPICAL STAB PRIMER FORMULATIONS

	1	2	3	4	5
Antimony sulfide	22	17	33	15	5
Potassium chlorate	45	53	33		
Lead thiocynate	33	25			
Lead azide		5	29	20	
Carborundum			5		
Barium nitrate				20	39
Basic lead styphnate				40	
Tetrocene				5	2
Lead styphnate (normal)					38
Lead dioxide					5
Calcium silicide					11

The autoignition and decomposition temperature varies from a low of 230°C to a high of 400°C. Stab mixtures are the most dense of all of the primer compositions, making them more sensitive. Generally, the greater the density the more sensitive is the mixture. This is because the determining magnitude for stab initiation is kinetic energy. Therefore, the more dense the material, the stronger is the resistance offered to the penetration of the firing pin, causing the kinetic energy of the moving mass of the firing pin to be dissipated over a shorter distance so that a smaller quantity of explosive is heated to ignition temperature. Gas volume varies from 10 to 25 ml/g. The stability of stab mixtures are considered poor as they are hygroscopic; therefore, care in coating and sealing is required to reduce the susceptibility to moisture. Vacuum stability tests indicate that an average of 0.3 ml/gas/40 hr is liberated at 100°C. This also indicates that these mixtures are unstable. However, when all compositions were heated to 75°C for 48 hours they failed to exhibit characteristics of an explosion, or have a marked loss in weight, or show a change in configuration. Parametric, stability, and sensitivity data for stab mixtures are shown in table 4.

Stab primer mixtures are the most sensitive of all of the primer mixtures. They will readily undergo detonation in large quantitites. Stab mixtures are sensitive to electrical spark initiation ranging from 0.0002 to 0.005 joules. These values are less than what is normally considered safe (0.01 joules as established by the Bureau of Mines as the safe limit for explosives handling by personnel). Extreme care is required to reduce electrostatic hazards. Formula O is highly susceptible to initiation in a dust cloud with a reported minimum energy of 0.0028 joules required for initiation. Stab mixtures are sensitive to both impact and friction. All stab mixtures failed the friction pendulum tests, both steel and fiber

shoe. The impact values are reported in oz-in from a 56 gram weight, and the amount of energy required for initiation is approximately 80 to 100 millijoules.

TABLE 4. SUMMARY OF PARAMETRIC, STABILITY AND SENSITIVITY DATA FOR STAB PRIMERS

		1	2	3	4
Autoignition temp	°C	340	288	301	274
Decomposition temp	°C	376	310	327	280
Density	g/cm^3	1.3-2.0	1.3-2.0	1.3-2.0	1.85
Gas volume	ml/g	10-25	10-25	10-25	10-25
Fuel/oxidizer ratio	x:1	1.22:1	0.79:1	1.15:1	0.75:1
Hygroscopicity	90%	Poor	Poor	Poor	Poor
Vacuum stability ml/gas/40 hr		0.3	0.3	0.3	0.3
Thermal stability	75°C	Good	Good	Good	Good
Electrical spark	joules	<0.005	0.005	0.005	0.0022
Friction (steel shoe)		CD*	CD	CD	CD
Impact	oz-in	2.04	2.36	5.04	5

*CD means complete detonation and refers primarily to reaction from steel shoe tests.

Percussion Primers

Percussion primer formulas are shown in table 5. The common ingredients include: oxidizers (potassium chlorate, barium nitrate, lead oxide, lead peroxide, and lead dioxide); fuels (antimony sulfide, lead thyocynate, powdered aluminum, calcium silicide, zirconium, boron, and ground glass); primary explosives (basic and normal lead styphnate, and tetracene) and high explosives (TNT and PETN). The amount of high explosives varies from 3 to 6% for those formulas which contain high explosives. The amount of primary explosives in each formula varies from 5 to 65%. The amount of oxidizer varies from a low of 22% to a high of 85%. The amount of oxidizer varies inversely proportional to the amount of primary explosives in the formulation. The amount of fuel found in the formulas varies from 9.5% to a high of 50%. The fuel/oxidizer ratio for percussion primer mixture ranges from 0.1:1 to 1.77:1.

The autoignition and decomposition for percussion primers range from 205 to 320°C. Loaded density ranges from 1:1 to 1.8 g/cm^3 and is usually less than those found in stab mixtures. Gas volume ranges from 5 to 10 milliliters per gram. Stability of percussion mixtures is similar to stab mixtures in that they too are hygroscopic, but proper coating and sealing can prevent a buildup in moisture. Percussion mixtures pass the 75°C heat test without an appreciable loss in weight. However, mixtures FA982 and FA956 show a high weight loss when subjected to a vacuum. This may indicate a loss in volatiles as well as moisture.

TABLE 5. TYPICAL PERCUSSION PRIMER FORMULATIONS

	1	2	3	4	5	6	7	8	9	10	11
Potassium chlorate	50				53			35			50
Antimony sulfide	20	10	10	37.05	17		10.3	30	7	15	
Lead peroxide	25										
TNT	5			5.69	5			3			
Basic leas styphnate		53	60								
Tetracene		5	5			5	3.1		12	4	
Barium nitrate		20	25	8.68			31		22	32	
Aluminum		10								7	
Lead thiocynate				38.18	25			17			
Ground glass				10.45							
Lead oxide						85.5					
Boron						9.5					
Lead styphnate (normal)							35		36	37	
Zirconium							10.3		9		50
Lead Dioxide							10.3		9		
Calcium silicide								15			
Petn									5	5	

The sensitivity of percussion mixtures is less than the stab mixtures but is on the same order of magnitude. They are sensitive to impact and friction. The mixtures react to the steel and fiber shoes of the friction impact test. All mixtures explode due to impact of a 2 kilogram weight at a drop height of less than 9.525 cm (3.75 in). They are sensitive to electrical spark ignition on the same order of magnitude as the stab mixtures. They generally require extreme care in handling so as to avoid electrostatic initiation. Table 6 shows a summary of some of the parametric, stability, and sensitivity data.

Electrical Primers

The formulas for typical electrical primer mixtures are shown in table 7. The common ingredients include: oxidizers (potassium chlorate and perchlorate); fuels (titanium, lead thiocynate, charcoal, and lead mononitro resorcinate); primary explosives (diazodinitrophenol [DDNP]), and high explosive (nitrostarch).

The decomposition temperatures are generally higher than either stab or percussion mixtures. They are loaded less densely than other mixtures and are more gaseous than other types of primer mixtures. Stability of the mixture is fair to good. Generally, they are

TABLE 6. SUMMARY OF BAROMETRIC, STABILITY, AND SENSITIVITY DATA FOR PERCUSSION PRIMERS

		1	2	3	4	5	6	7	8	9	10	11
Autoignition temp	°C	188	196	210	216	201	227	199	204	240	184	462
Decomposition temp	°C	216	215	227	231	216	235	209	224	262	193	411
Density (loading)	g/cm^3	1.56	1.3-2	1.3-2.5	1.3-2.2	1.3-2.4	1.56	1.3-2.3	1.4-2.4	1.4-2.4	1.3-2.4	2.2-3.0
Gas volume	ml/g	5-10	5-10	5-10	5-10	5-10	0.1-0.2	5-10	5-10	5-10	5-10	-
Fuel/oxidizer ratio	x:1	0.27:1	0.91:1	0.4:1	1.06:1	0.79:1	0.17:1	0.5:1	1.34:1	0.52:1	0.69:1	1
Thermal stability	75°C	Good	Good	Good	Good	Good	Good	Good	Good	Good	Good	Good
Electrical spark	joules	<0.05	<0.05	0.0022	<0.05	<0.05	<0.05	<0.05	<0.05	<0.05	<0.05	<0.05
Friction (steel shoe)		CD	CD	CD	CD	CD	CD	CD	CD	CD	CD	CD
Impact	inches	<3.75	<3.75	<3.75	<3.75	<3.75	<3.75	<3.75	<3.75	<3.75	<3.75	<3.75

TABLE 7. TYPICAL ELECTRICAL PRIMER FORMULATIONS

	1	2	3	4	5	6
Potassium chlorate	8.5	55	25	60		
Lead mononitro resorcinate	76.5					
Nitrocellulose	15					
Lead thiocynate		45				
Diazodnitrophenol			75	20		
Charcoal				15		
Nitrostarch				5		
Potassium perchlorate					66.6	66.6
Titanium					33.3	
*Aluminum						33.3

* The amount of oxidizing agent varies from 8 to 66%. The fuel varies from 15 to 76%.

less sensitive than other mixes, but threshhold initiation levels are controlled more precisely. Impact energy is greater than that required for either stab or percussion primer mixes. Table 8 shows the summary of parametric, stability, and sensitivity data.

TABLE 8. SUMMARY OF PARAMETRIC, STABILITY, AND SENSITIVITY DATA FOR ELECTRIC PRIMERS

		1	2	3	4	5	6
Autoignition temp	°C	244	203	396	396	475	446
Decomposition temp	°C	296	240	451	442	486	465
Loading Density	g/cm^3	1.9-2.6	1.6-2.2	1.6-2.2	1.6-2.4	2.16-2.36	2.2-2.6
Fuel oxidizer ratio	x:1	9	0.82	3	0.25	0.5	0.5
Gas volume	ml/g	-	25	148	96	286	150
Heat of combustion	cal/g	-	-	2960	2996	1900	-
Hygroscopicity	90%	Poor	Poor	Fair	Poor	Good	Good
Thermal stability	75°C	Good	Good	Good	Good	Good	Good
Vacuum stability ml/gas/	40 hr	0.22	0.3	0.26	0.18	0.013	0.01
Electrical spark	joules	<0.05	<0.05	<0.05	<0.05	0.005	0.0625
Friction (steel shoe)		Sens	Sens	Sens	Sens	Sens	Sens
Impact sensitivity	inches	<3.75	<3.75	<3.75	<3.75	10	12

Friction Primers

Friction primer mixtures are shown in table 9. By definition they are sensitive to friction and impact. They generally have poor stability and are susceptible to moisture. They are gaseous and, primarily, produce a flame as their intended output. Table 10 shows the summary of data.

TABLE 9. TYPICAL FRICTION PRIMER FORMULATIONS

	1	2	3
Potassium chlorate	63	53	42
Antimony sulfide	32	22	42
Gum arabic	5	5	5
Sulfur		9	3
Calcium carbonate		1	2
Ground glass		10	3
Meal powder			3

TABLE 10. SUMMARY OF PARAMETRIC, STABILITY, AND SENSITIVITY DATA FOR FRICTION PRIMERS

		1	2	3
Autoignition temp	°C	152	137	139
Decomposition temp	°C	165	152	152
Loading density temp	g/cm^3	0.9-1.3	0.85-1.3	0.8-1.3
Fuel oxidizer ratio	x:1	0.51	0.58	1.02
Hygroscopicity	90%	Poor	Poor	Poor
Thermal stability	75°C	Fair	Fair	Fair
Vacuum stability	ml/gas/40 hr	0.14	-	-
Weight loss	%	4.3	1.1	1.02
Electrical spark	joules	<0.05	<0.05	<0.05
Friction (steel shoe)		Sens	Sens	Sens
Impact sensitivity	inches	<3.75	<3.75	<3.75

SUMMARY

Initiating mixtures, in general, have relatively low decomposition temperatures; they vary in gas volume and density depending upon the type of mixture. They have a tendency to be hygroscopic; are unstable as the results of the hygroscopicity and vacuum stability tests, but not necessarily unstable as the results of thermal stability test. These mixtures require waterproofing agents and good sealing when inserted into the end item. By definition, these mixtures are sensitive to the various stimuli with which they were tested. The greatest concern is their sensitivity to electrical spark, which indicates the need for additional care during handling. Table 11 shows some of the characteristics of initiating mixtures.

Stab mixtures contain a fuel, an oxidizer, an additive, and sometimes a primary explosive. Percussion primers contain similar fuels and oxidizers and, additionally, a primary explosive as well as a non-initiating explosive as part of the formula. Electrical mixtures are similar to stab mixtures in that they do not generally contain high explosives. However, they are generally used in conjunction with a high explosive base charge. Friction mixtures contain no primary or high explosives. These variations in formulations do not make all initiation mixtures compatible with one another; therefore, they should not all be stored together without some type of separation. Because of their susceptibility to initiation by impact, electrostatic, and friction, these mixtures normally would be considered a military class 1.1, but because of the quantity of mixture per item, they are generally considered as a military class 1.3. This applies for stab, percussion, and friction primers. However, electrical detonators are generally classed as a military class 1.2. Since a primer is usually an integral part of an end item which contains a much larger charge, the actual classification is based upon the end item rather than the primer.

TABLE 11. COMPARISON OF SUMMARY OF RESULTS FOR INITIATING DEVICES

		Stab	Percussion	Friction	Electrical
Autoignition temp	°C	300±28	224 ± 61	142±8	343±112
Decomposition temp	°C	323±40	240 ± 59	156±7.5	397±102
Density (loading)	g/cm^3	1.3-2.0	1.8 ± 0.55	0.9-1.3	1.6-2.6
Fuel oxidizer ratio	x:1	0.98±0.24	0.7 ± 0.36	0.7±0.78	2.71±3.68
Gas volume	ml/g	10.25	6.8 ± 3.3	——	141±96
Heat of combustion	cal/g	——	——	——	2619±623
Hygroscopicity	90%	Poor	Poor	Poor	Poor
Thermal stability	75°C	Fair	Fair	Good	Good
Vacuum stability	ml/gas/40 hr	0.3	——	0.13±0.02	0.16±0.12
Electrical spark	joules	0.0043± 0.0014	0.0457 ± 0.014	0.029± 0.02	<0.05
Friction (steel shoe)		Sens	Sens	Sens	Sens
Impact sensitivity	inches	3.6 oz-in	<3.75	<3.75	3.75

ILLUMINANTS

Noun	Type	Use
Flares	Parachute	Released from aircraft, rockets or gunshell for purposes of observation
	Trip Flares	Long-burning ground flares used for night lighting of airfield and warning
Signals (stars)	Colored	Tracking, signaling
	White	Tracking flares, long-burning flares attached to missiles to follow flight
Photoflash	Tracking	Small flashes for tracking missiles
	Aerial Photography	Night aerial photography
Tracers	Tracking	Follow the flight of the projectile to determine range and direction
	Spotting	Target acquisition and aiming
	Armor piercing incendiary tracer	Fire starters

BACKGROUND

Illuminants are pyrotechnic mixtures that provide artifical light in devices such as flares, signals, tracers, and photoflash. The production of light is efficient in that a large quantity of potential energy may be stored in a small volume. The production of light may be of short duration, reaching maximum intensity in milliseconds and having a duration of several hundred milliseconds to long durations of five to ten minutes. Illuminants vary in size, shape, and color and their intended use determines the characteristics of the given device.

Flares

Flares are pyrotechnic devices designed to provide high intensity (40,000-5,000,000 candles) artificial light for relatively long durations (2-10 min). They are used primarily for night illumination of targets, airfield and enemy infiltration warning devices. There are basically two types: parachute and trip flares. Parachute flares may be released from aircraft, rockets, or ground shells and are suspended in flight by a parachute once they have reached their functioning altitude. The candela (candlepower) varies as a function of the type of flare and the amount of target illumination required. Aircraft released devices require the most candela followed by artillery shells, rockets, and hand-held devices which require the least amount of luminosity. The burn time and candlepower decreases

proportionally to the function altitude and target illumination. Because of this, most illumination flares are filled with more than one increment, sometimes with different formulations for each increment to provide the maximum value as required for the full duration of the desired burn time. Surface trip flares may be either parachute suspended or stationary. Trip flares are triggered by a lanyard pull device which ignites an expelling charge (parachute suspended only) which propels the candle to its function altitude (generally several hundred feet) and then ignites the flare. Stationary trip flares are triggered in the same manner, but a delay charge is ignited by the lanyard device and the illumination charge remains stationary. Both types of trip flares are used for emergency airfield landing and enemy infiltration.

Flares may provide white or colored light. The white flare is usually composed of magnesium as the fuel, sodium nitrate (oxidizer), and a binder. This produces a yellow-white light that is attributable to the sodium salt in the formulation. Colored flares are generally similar to white flares in that they utilize the same fuel (magnesium) and same binder but the oxidizer is barium nitrate for the green color, strontium nitrate for red color, and either strontium or barium nitrate with an oxalate of strontium or sodium for yellow. The colored flares also use an intensifier such as polyvinyl chloride, dechlorane in the newer formulas, and hexachlorobenzene in some of the older formulations. Additional fuels such as aluminum, copper, and sulfur are sometimes added to the formulation for additional coloring or, in some cases, as a substitute for magnesium. Taylor and Jackson [9] have offered several formulations in which aluminum is substituted for the more costly mangesium; these formulations have proven acceptable in the end item. Chlorates are generally considered too sensitive to be used in flare formulation. Sodium, barium, and strontium nitrates, as well as most perchlorates, are less sensitive, and these salts are used quite extensively in the majority of the formulas. However, recent studies by Webster and Gilliam[10] have investigated other oxidizers such as sodium iodate with some success. It produces a whiter (almost blue-white) light with no increase in candela. Binders commonly used in the older formulation included: laminac, VAAR, and other gums and resins. The newer formulations are using polysulfide-epoxy binders. The function of a binder is to aid in the compressibility of the pyrotechnic mixture, but it may alter the characteristics of the fuel/oxidizer by acting as a desensitizer and/or a burning-rate modifier. It has also been shown[11, 12] that the type of binder used can have a profound effect by increasing or decreasing the luminous output. Figure 32 shows a typical parachute flare and figure 33 shows a typical trip flare.

Stars

Stars are similar to flares except for the duration of light (0.1-2 minutes), and the candela requirement is less. Additionally, they are colors used primarily for day/night signaling. Stars also differ in that they may contain a single star or be in a cluster of 2 or more. An end-item may contain more than a single color. A typical star is shown in figure 34.

Photoflash

Photoflash charges provide high intensity (1-5 million candela) for a short duration (0.001-0.5 sec). They are primarily used for night aerial photography, although they may be used as high altitude tracking and simulation devices. Flashes are generally

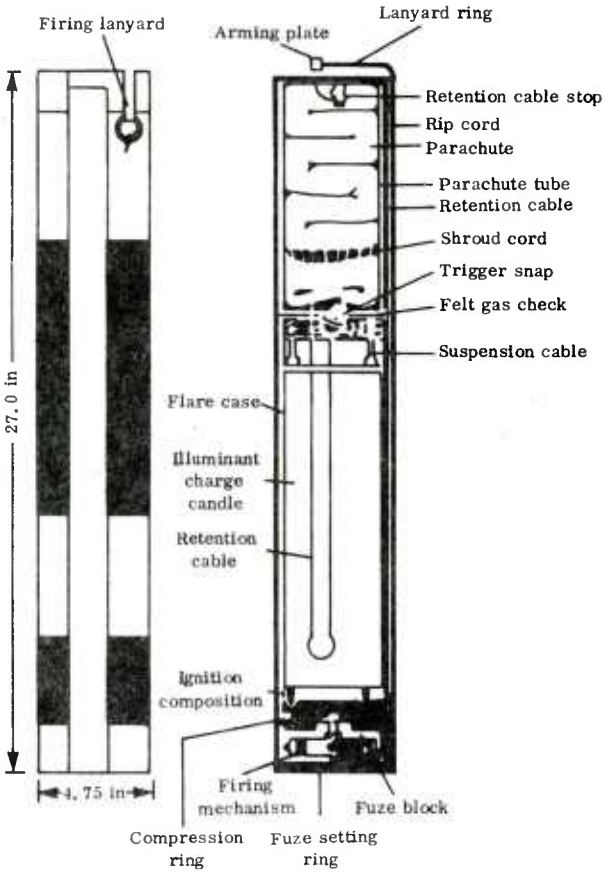

Figure 32. A Typical Parachute Flare

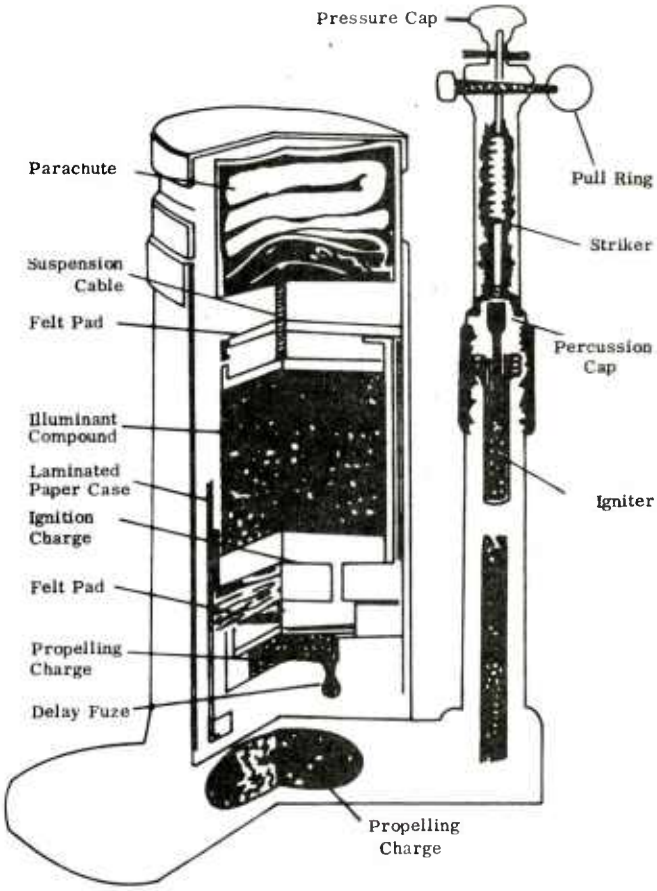

Figure 33. A M48A1 Trip Flare

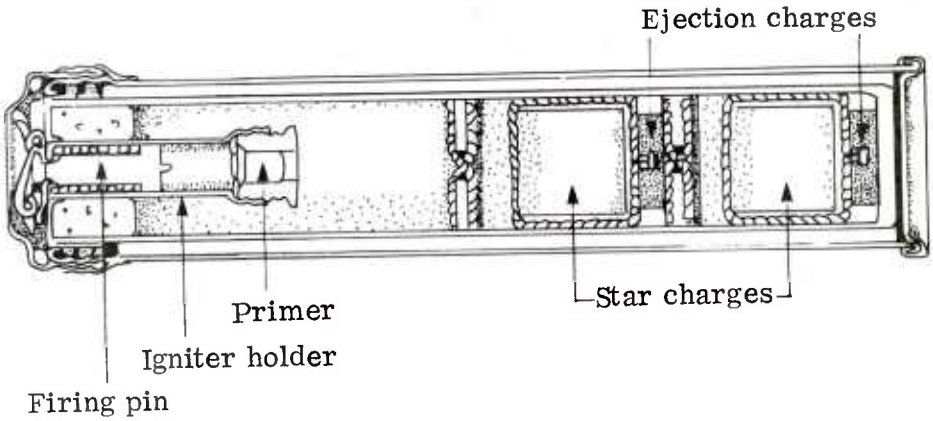

Figure 34. A Signal, Distress, Two Star, Red AN-M75

produced one of two ways: 1) dispersion of finely divided metal powders in air and then ignited by a pyrotechnic or explosive charge (dust bomb); 2) unconsolidated mixture of pyrotechnic ingredients that, when ignited, produces high temperature, high gas pressures, and a rapidly expanding flash-cloud. The candela for most photoflash charges is high but the efficiency (candela sec/g) is inferior to flares. This is primarily due to the fact that a significant portion of the reaction is radiant emission in the infrared region which is desirable for photographic purposes. Flash charges as used in simulation devices will be discussed in more detail in later chapters.

Photoflash charges are generally binary systems containing a fuel and an oxidizer. They are loaded into end items in an unconsolidated state and are usually considered to be very sensitive. The fuels are finely divided metal powders (usually magnesium, magnesium/aluminum alloy, or aluminum). Most modern formulas contain aluminum, although it is generally more sensitive to impact and electrostatic initiation than magnesium or the alloy flash charge. The oxidants are usually potassium perchlorate and barium nitrates. Figure 35 shows a typical photoflash cartridge.

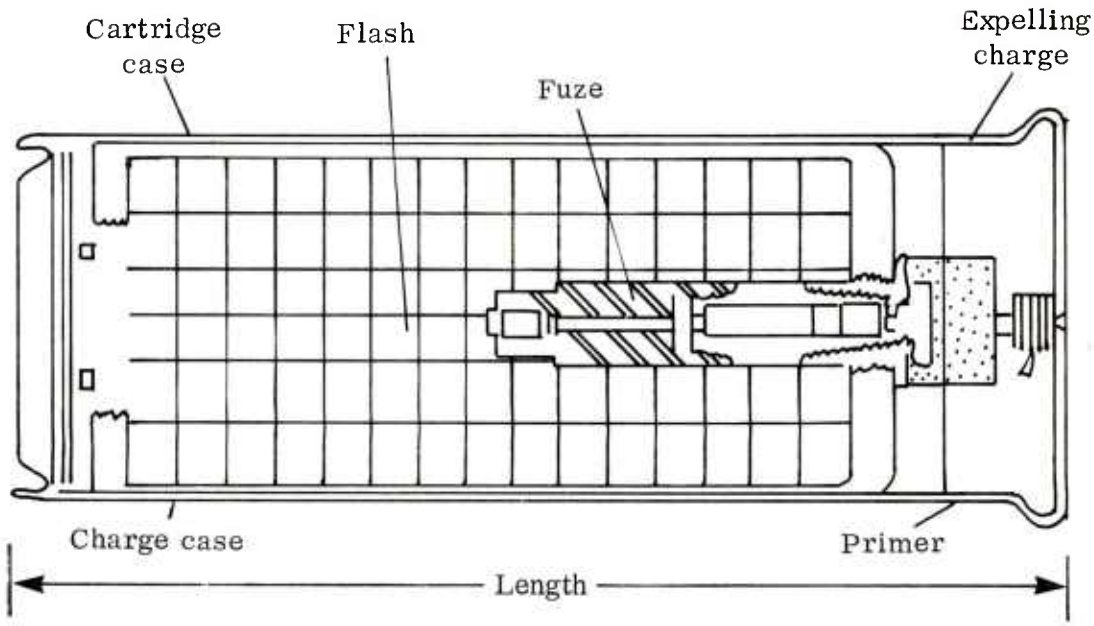

Figure 35. Typical Photoflash Cartridge

Tracers

Tracers are small flares that burn from 3 to 20 seconds with a relatively low candela (200-2000). They are used to follow the flight of a projectile to determine range and direction of fire. The mixtures are pressed into the cavity at the base of the small arm, artillery projectile, or into a separate assembly fitted into the base of the munition at extremely high loading pressure, 586-862 MPa (85,000-125,000 psi). They are generally composed of a fuel (magnesium, magnesium-aluminum alloy), an oxidizer (strontium nitrate, strontium peroxide, barium peroxide), and a binder. There are also smoke composition tracers used for spotting and tracer/incendiary mixtures used for starting fire.

Tracer mixtures are pressed into the projectile cavity at high loading pressures to off set "set back" of the ammunition being fired. The general rule of thumb being that loading pressure should be 25% greater than "set back" pressure. Because of the high loading pressures and the fuels and oxidizers used, tracer mixtures are difficult to overcome this. An igniter mixture is used which is more easily ignitable and provides good fire transfer to the tracer mixture. The important attributes of the igniter mixture are relative sensitivity to initiation, proper fire transfer to the tracer mixture, minimal amounts of gas, nonhygroscopicity, and some illumination (usually 200-1000 candela). The latter can be a drawback to the gunner by blinding him or betraying his position. To overcome this, a dim igniter mixture is utilized which is non-gaseous, has practically no luminosity, and is readily ignitable. A typical tracer train is shown in figure 36.

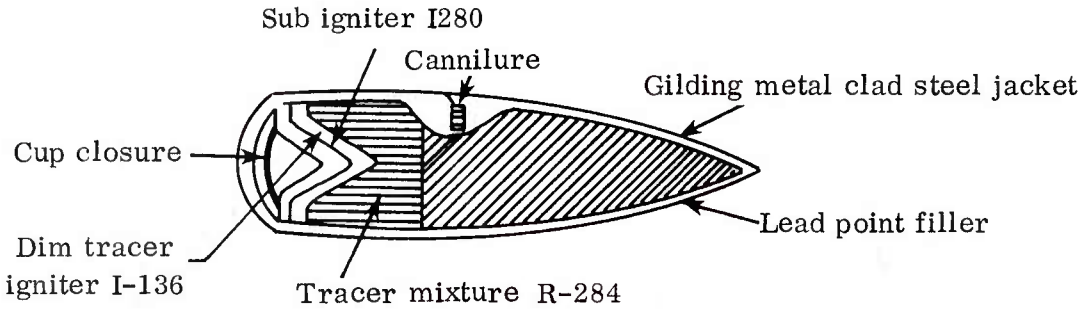

Figure 36. NATO 7.62 mm Tracer Ball

The effectiveness of a tracer mixture is based upon its linear burning rate and luminosity over a desired range. The burning rate and luminosity are directly proportional to the magnesium content and the rotational speed. Spinning rate has a pronounced effect upon the candela and burning time due to the lack of slag retention. The effects of burn time are inversely proportional to the spin rate, which varies with the type of projectile.

Spotting tracers provide visual observation during flight and impact of the target area by providing a flash of light and a puff of smoke. This allows for adjustment of air from a sub-caliber weapon simultaneously with a larger caliber main gun. Spotting tracers are sub-caliber and are attached to a large caliber weapon to provide a method of aiming the

larger caliber weapon. The gunner must be able to see both the flash and smoke puff upon impact. The flash lasting from 40 to 200 milliseconds is used as the primary source for target retention with the smoke puff (usually white) secondary. A typical spotting tracer is shown in figure 37.

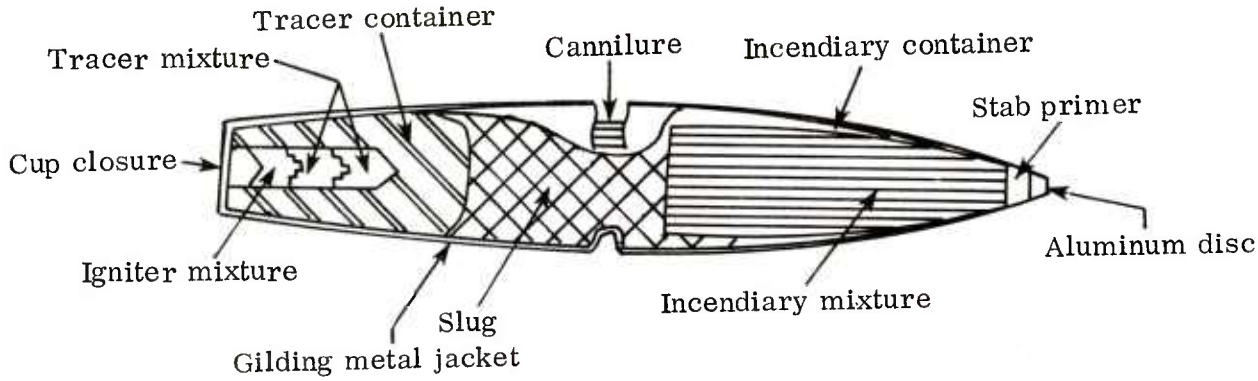

Figure 37. A Typical Spotting Tracer Cal. 50 M48A1

Armor-piercing tracers are used to start fires. They are used primarily in air-to-air warfare but not excluded from air-to-ground, ground-to-air, or ground-to-ground. They are particularly useful in igniting aircraft or ground equipment fuels. They may also be effective against armored personnel vehicles. An armor-piercing device is shown in figure 38. Most small arms incendiary compositions are mixtures of metals (or metal alloys) and an oxidizing compound in some type of an explosive. These mixtures are usually initiated by impact or friction and burn rapidly. In some cases they burn with explosive violence. The output must be greater than the target initiation temperature, and the duration of the flash must be sufficient to cause initiation of the target.

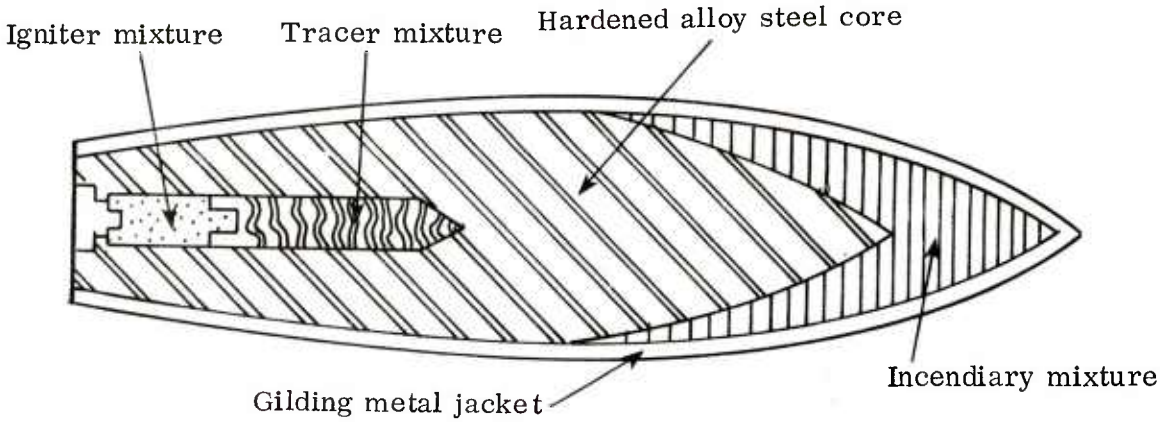

Figure 38. Armor-Piercing Tracer

DATA DISCUSSION

Data sheets for all of the illuminant mixtures are included in Appendix A. Formulas for individual types of illuminants are given in tables 12, 14, 16, 18, 20, and 22. Summaries of data are given in tables 13, 15, 17, 19, 21, and 23. Table 24 is a comparison of results for all illuminants.

Colored Light (Green Flares/Stars)

Green flares are shown in table 12. The common ingredients include: fuel (magnesium and copper); oxidizers (barium nitrate, potassium perchlorate and cupric oxide) which provide the basic color; intensifiers (polyvinyl chloride, dechlorane and hexachlorobenzene) which add to the basic color and aid in achieving the desired luminosity; and binders (epoxy resin and varnishes).

TABLE 12. TYPICAL GREEN FLARE/STAR FORMULATIONS

	1	2	3	4	5	6	7	8	9
Magnesium 30/50	16.8	21	16	26	35	20	23	33	15
Magnesium 50/100	16.8								
Barium Nitrate	40.1	22.5	59	45	22.5	50	53	46	66
Potassium perchlorate	9.5	32.5		16	22.5	10			
Polyvinyl chloride		12			13	16		16	
Copper		7	2				2		2
Hexachlorobenzene			21	7			20		15
Oil (linseed)			2	2					2
Dechlorane	12.6								
VAAR	4.2								
Binder		5*						5**	
Asphaltum						4	2		
Cupric oxide				2					
Gilsonite				2					
Laminac					5				

*Binder: CX7069.7 - 80% and CX 3842.1 - 20%

**Binder: Laminac 4116 - 97.9%; lupersol DDM 1.5%; colbaltnapthene 0.6%

Autoignition temperatures range from a low of 340° C to a high of 516° C. Decomposition temperatures as determined by the DTA method are higher, ranging from a low of 400° C to a high of 540° C. Bulk density varies from 0.8 to 0.95 g/cm^3, and loading densities are much higher, ranging from 1.6 to 1.9 g/cm^3. However, loading density varies with each end item and the method of expelling the item with set-back requirements dictating the amount of consolidation required to preclude break up of the pyrotechnic mixtures prior to functioning. Fuel/oxidizer ratios vary from a low of 0.21 to a high or 0.72. Generally the mixtures are oxygen rich. Gas volume is considered high since large amounts of gas are generated to produce the amount of luminosity desired. Heat of

combustion data were reported for only one mixture, and this value is the same order of magnitude as other colored flares.

Stability data indicate that green flares and stars have poor stability, being somewhat hygroscopic. This is primarily due to the oxidizers which are very hygroscopic.

Sensitivity data indicate that these mixtures are insensitive to shock, heat, friction, or electrical spark. However, they are sensitive to impact, generally on the same order of magnitude as a primary high explosive compound. Table 13 is a summary of parametric, stability, and sensitivity data for green flares/stars.

TABLE 13. SUMMARY OF PARAMETRIC, STABILITY AND SENSITIVITY OF GREEN FLARES/STARS

		1	2	3	4	5	6	7	8	9
Autoignition temperature	°C	340	-	516	456	491	497	456	-	448
Decomposition temperature	°C	400	-	540	477	510	513	469	-	479
Density (bulk)	g/cm^3	0.8-0.95	0.8-0.95	0.8-0.95	0.8-0.95	0.8-0.95	0.8-0.95	0.7-0.95	0.7-0.95	0.8-0.95
Density (loading)	g/cm^3	1.6-1.9	1.79	1.6-1.9	1.6-1.9	1.7-2.4	1.7-2.4	1.7-2.4	1.6-2.4	1.7-2.4
Fuel/oxidizer ratio	x:1	0.64	0.52	0.23	0.37	0.6	0.26	0.34	0.72	0.21
Heat of combustion	cal/g	2317	-	2013	2317	2441	2091	-	2643	1946
Heat of reaction	cal/g	1520	-	1163	1221	1018	1102	-	1333	1114
Hygroscopitity	95%	Poor	-	Poor	Poor	Poor	Poor	Poor	Poor	Poor
Thermal stability	75° C	Poor	Good	Good	Good	Good	Good	Good	Good	Good
Vacuum stability	ml/gas/40 hr	0.11	-	-	-	-	-	-	-	-
Weightloss	%	0.98	-	0.76	-	0.6	0.14	0.23	-	0.79
Card gap		N.D.	N.D.	N.D.	N.D.	N.D.	N.D.	N.D.	N.D.	N.D.
Detonation		Slight Mushroom	-	N.D.	N.D.	N.D.	N.D.	N.D.	N.D.	N.D.
Electrical spark	Joules	>11.02	-	>11.02	>11.02	>11.02	>11.02	>11.02	>11.02	>11.02
Friction (steel shoe)		INSENS	INSENS	INSENS	INSENS	INSENS	INSENS	INSENS	INSENS	INSENS
Ignition and unconfined burning		No Expl	No Expl	No Expl	No Expl	No Expl	No Expl	No Expl	No Expl	No Expl
Impact sensitivity	inches	3.75	12	12	14	14	13	11	16	14
Burn time	sec/cm	20.4	-		0.59	0.55	1.38	1.18	0.78	2.17

(Red Flare/Star)

Red flare/star formulations are given in Table 14. The common ingredients include: fuel (magnesium and charcoal); oxidizers (strontium nitrate, potassium perchlorate, strontium oxalate and ammonium perchlorate); intensifiers (polyvinyl chloride and hexachlorobenzene); additives (stearic acid, calcium silicide and Gilsonite); and binders (epoxy resins and varnishes).

Autoignition temperature ranges from a low of 360° C to a high of 435° C. This is slightly higher than the values reported for green flares but lower than values reported for yellow and white flares. Decomposition temperature ranges from a low of 425° C to a high of 510° C. Bulk density varies from 0.8-0.95 g/cm^3 and loading densities vary as a function of the end item, ranging from 1.7 to 2.2 g/cm^3. These values are the same as the other white and colored flare mixtures. Fuel/oxidizer ratios are on the same order of magnitude as other colored flares which are generally oxygen rich. Gas volume data are not reported, but these mixtures can be considered gaseous due to the production of light. Generally, gas volume is considered to be on the same order of magnitude as the

production of white light. Heat of combustion data range from a low of 2216 cal/g to a high of 2575 cal/g. Heat of reaction values are somewhat lower and range from a low of 1178 cal/g to a high of 1487 cal/g.

TABLE 14. TYPICAL RED FLARE/STAR FORMULATIONS

	1	2	3	4	5	6	7	8	9
Magnesium 30/50		9	33	29	21	8	17.5	40	23
Magnesium 50/100	29	20							
Strontium nitrate	43	44	48	34	45	38	45	30	41
Potassium perchlorate	9	7		29	15		25	20	22
Polyvinyl chloride	12	13	15			17	5		
Hexachlorobenzene				4	12			5	6
Gilsonite				2	7		7.5		8
Laminac	7	7							
VAAR			4						
Oil				4					
Ammonium perchlorate						15			
Strontium oxalate						10			
Calcium silicide						2			
Asphaltum								5	
Charcoal						6			

Hygroscopicity data indicate that they readily absorb moisture (approximately 40% at 95% humidity). Vacuum stability results indicate that they liberate from 0.21 to 0.42 ml/gas/40 hr which make these mixtures unstable. However, thermal stability results indicate just the opposite, that these mixtures are stable at 75°C for prolonged periods. Weight loss as determined by the vacuum oven method at 50°C also indicates that these mixtures are not quite as unstable as the vacuum stability results might indicate.

Sensitivity data indicate that red flare/star mixtures are relatively insensitive to friction and electrical spark. There were no detonations or mushrooming as the results of the card gap and detonation tests. However, several samples burned as the result of initiation by a number 8 cap as outlined in the detonation test. There were no explosions as the results of the ignition and unconfined burning tests, although several samples burned rapidly without any external pressure. Impact sensitivity data indicate that these flare mixtures are insensitive to impact by the same order of magnitude as non-initiating high explosives with the exception of the first three formulas which ranged from 3.75 to 10 inches in impact drop height. Table 15 is a summary of test results for red flares/stars.

TABLE 15. SUMMARY OF PARAMETRIC, STABILITY AND SENSITIVITY DATA FOR RED FLARES/STARS

		1	2	3	4	5	6	7	8	9
Autoignition temperature	°C	376	376	400	391	401	414	416	510	399
Decomposition temperature	°C	444	444	510	411	426	439	428	560	418
Density (bulk)	g/cm^3	0.8-0.95	0.8-0.95	0.8-0.95	0.8-0.95	0.8-0.95	0.8-0.95	0.8-0.95	0.8-0.95	0.8-0.95
Density (loading)	g/cm^3	1.7-2.4	1.7-2.4	1.7-2.4	1.7-2.4	1.7-2.4	1.7-2.4	1.7-2.4	1.7-2.4	1.7-2.4
Fuel/oxidizer ratio	x:1	0.56	0.57	0.69	0.46	0.35	0.22	0.25	0.8	0.37
Heat of combustion	cal/g	2432	2475	2575	2378	2518	2311	2416	2511	2216
Heat of reaction	cal/g	1437	1330	1487	1406	1437	1383	1402	1415	1178
Hygroscopicity	95% RH	Poor	Poor	Poor	Poor	Poor	Poor	Poor	Poor	Poor
Thermal stability	75° C	Good	Good	Good	Good	Good	Good	Good	Good	Good
Vacuum stability	ml/gas/40 hr	0.25	0.42	0.21	0.36	0.18	0.4	0.28	-	-
Weight loss		1.9	1.43	0.78	1.21	1.01	1.16	1.16	-	-
Card gap		N.D.	N.D.	N.D.	N.D.	N.D.	N.D.	N.D.	N.D.	N.D.
Detonation		C.B.	C.B.	N.D.	Burning	N.D.	N.D.	N.D.	N.D.	N.D.
Electrical spark	Joules	>11.02	>11.02	>11.02	>11.02	>11.02	>11.02	>11.02	>11.02	>11.02
Friction (steel shoe)		INSENS	INSENS	INSENS	INSENS	INSENS	INSENS	INSENS	INSENS	INSENS
Ignition and unconfined burning		No Expl	No Expl	No Expl	No Expl	No Expl	No Expl	No Expl	No Expl	No Expl
Impact sensitivity	inches	3.75	10	10	10	15	18	15	18	17
Burn time	sec/cm	0.4	0.78	1.97	0.91	0.59	1.77	1.18	1.77	2.76

(Yellow Flares/Stars)

Yellow flare/star formulations are given in table 16. The fuels, oxidizers, and binders are similar to those employed in other colored illuminants. However, sodium oxalate is used as the intensifier, due to the sodium spectra, to provide a better yellow hue. Table 16 lists some typical yellow flare/star formulations.

TABLE 16. TYPICAL YELLOW FLARE/STAR FORMULATIONS

	1	2	3	4	5
Magnesium		26	9	18	19
Aluminum	3.5				
Barium nitrate	64	29		17	
Strontium nitrate	15.5			16	
Potassium nitrate	15.5				
Potassium perchlorate		23	50	17	50
Sodium oxalate		13	17	17	15
Hexachlorobenzene		5	9	12	7
Gilsonite		2			9
Oil		2	3		
Asphaltum			12		

Autoignition temperature ranges from a low of 478° C to a high of 532° C, and the decomposition temperatures range from a low of 510° C to 629° C. These values are higher than those reported for either the green and red flare/star mixtures. Bulk and loading densities are on the same order of magnitude of those reported for red and green flares/stars. The fuel/oxidizer ratios are generally less than other colored illuminants, but these mixtures too are considered oxygen rich. Heat of combustion ranges from a low of 1680 cal/g to a high of 2265 cal/g, and heat of reaction ranges from a low 1114 cal/g to a high of 1310 cal/g. These values are lower than those reported for other colored illuminants.

Hygroscopicity data indicate that these mixtures have an affinity for moisture at the 95% relative humidity but do not absorb readily at 50%. Thermal stability test results indicate a good stability at 75°C for a 48-hour period where little or no weight loss or change in configuration occurred. Weight loss at 50°C in a vacuum for these mixtures indicate that these mixtures lost less than 1.5% in weight due either to moisture or volatiles. Overall, due to the high amounts of moisture being absorbed during the hygroscopicity test, these mixtures would be catagorized as having poor stability.

Sensitivity data for these mixtures indicate that they are insensitive to friction, electrical spark, open flame, the effects of a number 8 blasting cap as outlined in the

TABLE 17. SUMMARY OF PARAMETRIC, STABILITY AND SENSITIVITY DATA FOR YELLOW FLARE/STAR

		1	2	3	4	5
Autoignition temperature	° C	510	496	478	532	510
Decomposition temperature	° C	579	534	510	629	546
Density (Bulk)	g/cm^3	0.8-0.95	0.8-0.95	0.8-0.95	0.85	0.8-0.95
Density (loading)	g/cm^3	1.6-2.3	1.6-2.3	1.6-2.3	1.6-2.2	1.6-2.4
Fuel/oxidizer ratio	x:1	0.04	0.39	0.13	0.21	0.29
Heat of combustion	cal/g	2265	2176	2218	1680	1946
Heat of reaction	cal/g	1310	1254	1296	1114	1149
Hygroscopicity	95%	Poor	Poor	Poor	Poor	Poor
Thermal stability	75° C	Good	Good	Good	Good	Good
Weight loss	%	1.63	0.98	0.98	0.37	1.1
Card gap		N.D.	N.D.	N.D.	N.D.	N.D.
Detonation test		N.D.	N.D.	N.D.	C.B.	N.D.
Electrical spark	Joules	>8	>8	>8	>8	>11.02
Friction (steel shoe)		INSENS	INSENS	INSENS	SENS	INSENS
Ignition and unconfined burning		No Expl	No Expl	No Expl	No Expl	No Expl
Impact sensitivity	inches	10	10	10	3.75	10
Burn time	sec/cm	1.38	1.18	0.98	8.46	4.13
TNT equivalency	%	-	-	-	56	-

detonation test, and they did not detonate as the results of the card gap tests. These mixtures, however, seem to be slightly more sensitive to impact than other color flares/stars.

Formula 4 was tested explosively due to a fatal accident involving this mixture. The primary area of interest was to determine if this mixture had a tendency to mass detonate. Preliminary results indicated that this mix would detonate and an explosive equivalency (as compared to TNT) was greater than 50% in a confined vessel (similar geometry to mixer which blew). This mixture was found to be sensitive to friction and impact. Summary of test results for yellow flare/star mixtures are shown in table 17.

White Flare/Star

White flare/star formulations are shown in table 18. With the exception of several mixtures, these flares are a magnesium-sodium nitrate-binder type of mixture. Magnesium is employed as the primary fuel source, although aluminum has been substituted with success. The luminous output varies as a function of the particle size as does the sensitivity. The color produced by these mixtures is slightly yellow and is primarily due to the sodium ion spectra being yellow-white. The binders used in older formulas were varnishes and resins, but the newer mixtures, currently being loaded, contain a polysulfide epoxy binder. Binder variations also affect the burn time and luminosity.

TABLE 18. TYPICAL WHITE FLARE/STAR FORMULATIONS

	1	2	3	4	5	6	7	8	9	10	11	12	13	14	15	16
Magnesium 30/50	58	50	46	48	44	48		48.4	36	55			29.5		25	61
Magnesium 100/200							70									
Magnesium 200/300											54	54				
Sodium nitrate	37.5	44	45	42	44	40	30	47.2	54	36				53		20
TFE 100 mesh											46					
Polyvinyl chloride				2												
Laminac	4.5	6	9	8	12	12				9						
VAAR								4.4	10					5		
Nitrocellulose											2.6	26	5			
TFE 60 mesh												46				
Barium nitrate													49		42	
Strontium nitrate													16.5		11	
Aluminum														35	14	
Tungsten														7		
Asphaltum															5	
Linseed oil															3	
Sodium nitrate (coarse)																10.8
Binder																8.1

Autoignition temperatures range from a low of 414° C to a high of 564° C, and decomposition temperatures range from 490° C to 666° C. These values are similar to the yellow flare/star mixtures. Density values for both bulk and loading are generally the same as other flare mixes. The fuel/oxidizer ratio is higher than other flare mixes. The

theoretical stoichiometric formulation for magnesium-sodium nitrate flares in approximately 40% fuel content. Most of the formulas reported show an excess of magnesium. Heat of combustion ranges from a low of 2229 cal/g to a high of 3000 cal/g, and heat of reaction data range from 1090 cal/g to 2035 cal/g. Those values are in the mid to upper range for the colored flares. The significance here is the wide spread between the lower and upper limits.

Hygroscopicity values at 95% humidity indicate that these mixtures readily absorb moisture as high as 50% by weight change. Stability based upon hygroscopicity would be considered poor. Thermal stability results indicate that there was no weight loss or change in configuration when subjected to 75° C heat for a 48-hour period. Vacuum stability results indicate that these mixtures liberate 0.15 to 0.56 ml/gas in a 40-hour period making them unstable. Weight loss results also indicate that this general trend.

Sensitivity of these mixes indicates that they are less sensitive to electrical spark than other types of flare mixes and insensitive to friction and open flame. Impact sensitivity is generally the same as other flare mixtures with the exception of mixtures 3 and 11 which are extremely sensitive to impact. There were no detonations due to the card gap tests, but slight mushrooming occurred on mixture 1 as a result of the detonation test series. There was also a greater percentage of samples that burned as a result of the detonation test than there were for the colored flare mixtures.

TABLE 19. SUMMARY OF PARAMETRIC, STABILITY AND SENSITIVITY DATA FOR WHITE FLARE/STAR

		1	2	3	4	5	6	7	8	9	10	11	12	13	14	15	16
Autoignition temperature	°C	460	414	431	437	425	441	525	440	415	448	510	510	425	564	525	515
Decomposition temperature	°C	544	490	510	517	502	522	620	519	490	530	602	602	500	666	621	586
Density (bulk)	g/cm^3	0.96	0.91	0.78	0.92	0.91	0.9	1.65	0.91	0.86	0.86	0.7	0.68	0.89	0.85	0.93	0.94
Density (loading)	g/cm^3	1.74	1.7-2.2	1.7-2.2	1.7-2.2	1.7-2.2	1.7-2.2	2.32	1.7-2.2	1.7-2.2	1.57	1.5	1.49	1.7-2.2	1.7-2.2	1.7-2.2	2.32
Fuel/oxidizer ratio	x:1	1.55	1.14	1.02	1.14	1	1.2	2.33	1.02	0.66	1.5	1.17	1.17	0.45	0.79	0.74	1.97
Gas volumn	ml/g	74	53	50	46	66	54	67	53	70	68	73	79	65	-	43	60
Heat of combustion	cal/gm	2825	3090	2835	2692	2595	2925	3016	2818	2660	2795	2240	2229	2456	-	2610	2942
Heat of reaction	cal/gm	2035	1995	1748	1643	1611	1817	1945	1813	1524	1910	1115	1090	1490	-	1407	1814
Hygroscopicity	90%	Poor	Poor	Poor	Poor	Poor	Poor	Poor	Poor	Poor	Poor	Good	Good	Poor	Poor	Poor	Poor
Vacuum stability	ml/gas/40 hr	0.18	0.14	0.5	0.11	0.16	0.18	0.32	0.34	0.10	0.15	0.51	0.56	0.19	0.35	0.46	0.18
Thermal stability	75° C	Good	Good	Good	Good	Good	Good	Good	Good	Good	Good	Good	Good	Good	Good	Good	Good
Weight loss	%	2.6	2.2	1.19	1.8	1.6	1.77	1.18	0.96	1.11	0.99	0.19	0.23	5.73	1.1	1.14	0.96
Card gap results		N.D.	N.D.	N.D.	N.D.	N.D.	N.D.	N.D.	N.D.	N.D.	N.D.	N.D.	N.D.	N.D.	N.D.	N.D.	N.D.
Detonation test results		SM	C.B.	N.D.	N.D.	N.D.	N.D.	N.D.	N.D.	N.D.	N.D.	C.B.	C.B.	C.B.	C.B.	C.B.	C.B.
Electrical spark	Joules	>11.02	>11.02	>11.02	>11.02	>11.02	>11.02	>11.02	>11.02	>11.02	>11.02	0.375	1.325	>11.02	>11.02	>11.02	>11.02
Friction (steel shoe)		Insens	Sens	Insens	Insens	Insens	Insens	Insens	Insens	Insens	Insens	Insens	Insens	Insens	Insens	Insens	Insens
Ignition and unconfined burning		No Expl	No Expl	No Expl	No Expl	No Expl	No Expl	No Expl	No Expl	No Expl	No Expl	No Expl	No Expl	No Expl	No Expl	No Expl	No Expl
Impact sensitivity	inches	10	18	3.75	17	13	21	22	21	18	20	3.75	10	10	10	10	10
Burn time	sec/cm	0.4	0.4	2.56	0.85	0.59	0.98	1.54	1.96	1.8	3.94	0.4	0.4	1.94	0.8	1.97	2.75
TNT equivalency	%	48.5	-	-	-					50	30	10	10	-	-	-	-

Detonation test results CB indicates complete burning

Detonation test results SM indicates slight mushrooming

Output data of these samples do not indicate a rapid burn time (sec/cm) in the bulk state, but TNT equivalency indicates that these mixtures are energetic with TNT equivalency values ranging from a low of 10% to a high of 50%. These data correlate with some known incident/accidents at several plant locations. Formula 1 was tested extensively for critical diameter and critical height since a similar mixture was involved in a catastrophic accident. The results of these tests indicated that there was a critical diameter

of approximately 0.3 m (1 ft) and a critical height of 25 cm (10 in). This mixture would deflagrate with some external pressure when thermally ignited and would mass detonate when initiated with a small explosive charge. This correlated with the detonation test results (i.e., slight mushrooming), and a TNT equivalency value of approximately 43% was obtained for this mixture. As for all of the white flare mixtures, there are insufficient data on TNT equivalency to make a valid comparison for all mixtures, but sufficient knowledge has been gained to warrant precaution when handling. A summary of data is given in table 19.

Photoflash

Photoflash mixtures are shown in table 20. These mixtures are basically a fuel and an oxidizer intimately mixed and then loaded into the end items as loose powder. The fuels are aluminum or an aluminum-magnesium alloy and the oxidizers are barium nitrate and potassium perchlorate. These mixtures rapidly undergo combustion as they are expected to function to full light intensity in approximately 40-60 milliseconds. Because they are an intimate fuel/oxidizer mixture they should be handled with care.

TABLE 20. TYPICAL PHOTOFLASH MIXTURE FORMULATIONS

	1	2	3	4
Aluminum 20μ	40	40	40	4
Barium nitrate 147μ	30		30	54.5
Potassium perchlorate 24μ	30	60		
Potassium perchlorate 325μ			30	
Magnesium-Aluminum Alloy				45.5

A summary of results is shown in table 21. Autoignition temperatures are high as compared to other illuminant mixtures, ranging from a low of 735° C to a high of 856° C. Decomposition temperatures are higher, ranging from a low of 867° C to a high of 900° C. The high temperatures are primarily due to the high melting point of the aluminum. Densities (both bulk and loading) are on the same order of magnitude as other illuminants, except that these mixtures are loaded as a loose powder. Fuel/oxidizer ratios are similar to other illuminants. Heat of combustion and heat of reaction are generally on the high side, ranging from a low of 2628 and 1756 cal/g to a high of 2768 and 1802 cal/g respectively.

Hygroscopicity of these mixtures are quite good and thermal stability results agree. However, vacuum stability results are poor inasmuch as 0.24 ml/gas/40 hr has been reported. Weight loss data agree with hygroscopicity and thermal stability data indicating that these mixtures are somewhat stable in spite of vacuum stability results.

Photoflash mixtures are sensitive to electrical spark, friction and impact, and mushrooming occurred as the result of detonation tests. However, they failed to detonate in the card gap configuration. The initiation level due to electrical spark is several orders of magnitude less than for other illuminant mixtures. All of the mixtures tested showed an impact value of 10 in. None of these mixtures exhibited characteristics of an explosion when exposed to open flame, but they burned very rapidly.

TABLE 21. SUMMARY OF PARAMETRIC, STABILITY AND SENSITIVITY DATA FOR PHOTOFLASH MIXTURES

		1	2	3	4
Autoignition temperature	° C	856	735	762	832
Decomposition temperature	° C	930	867	900	867
Density (bulk)	g/cm^3	1.34	1.3-1.7	1.67	1.3-1.7
Fuel oxidizer ratio	x:1	0.67	0.67	0.67	0.83
Gas volume	ml/g	15	26	15	14
Heat of combustion	cal/g	2628	2768	2761	2610
Heat of reaction	cal/g	1790	1802	1756	1602
Hygroscopicity	95%	Good	Good	Good	Good
Thermal stability	75° C	Good	Good	Good	Good
Vacuum stability	ml/gas/40 hr	0.22	0.26	0.22	0.17
Weight loss	%	0.09	0.018	0.07	0.07
Card gap		N.D.	N.D.	N.D.	N.D.
Detonation test		Mush-rooming	Mush-rooming	Mush-rooming	Mush-rooming
Electrical spark	Joules	2.14	0.37	1.325	1.325
Friction (steel shoe)		SENS	SENS	SENS	SENS
Ignition and unconfined burning		No Expl	No Expl	No Expl	No Expl
Impact sensitivity	inch	10	10	10	10
Critical diameter	m	0.054	0.05	0.05	0.05
Critical height	cm	110	5	5.08	5
TNT equivalency	%	36	50	30	-

The output of photoflash mixtures indicates that they may have a tendency to mass detonate. The burn time is in the millisecond range and the mixture usually reaches full light intensity in about 150-400 milliseconds. TNT equivalency values obtained indicate that these mixtures are very energetic with equivalencies ranging from a low of 30% to a high of 50%. These values validate the concern for manufacturing and user safety.

Tracers and Igniter Mixes

Tracer and tracer igniter mixture formulations are given in table 22. The fuel is magnesium and oxidizers are strontium nitrate, strontium and barium peroxide, and lead dioxide. Polyvinyl chloride is used as in intensifier. The primary color of these mixtures

is red, although there are other colors of tracer mixtures. The igniter mixtures and dim igniter mixtures vary in formulation, but the primary concern is ease of initiation and transfer to the main tracer charge.

A summary of test results is shown in table 23. Autoignition temperatures range from a low of 375° C to a high of 856° C for the igniter mixtures and a low of 464° C to a high of 510° C for the tracer mixtures. Decomposition temperatures for the igniter mixtures vary from a low of 445° C to a high of 926° C and from a low of 421° C to a high of 625° C for the

TABLE 22. TYPICAL TRACER, TRACER IGNITER AND DIM IGNITER FORMULATIONS

	1	2	3	4	5	6	7	8	9	10
Strontium nitrate	53.7	33	18	56			27.5			
Polyvinyl chloride	18.1			7			15			
Magnesium 50/100	28.1	27	46		21.5		27.5	17		15
Strontium peroxide		26			65.6		30		90	76.5
Calcium resinate		9			6			2	10	8.5
Gilsonite			3							
Hexachlorobenzene			4							
Potassium perchlorate										
Magnesium-Aluminum alloy			29	37						
Barium peroxide					3.4			81		
Lead dioxide					3.4					
I136 Premix*						79.5				
Premix**						20.5				

*I136 Premix = 90% strontium peroxide 10% calcium resinate
**Premix = 23.3 lead dioxide; 77.7% magnesium

tracer mixtures. Bulk density varies from a low of 0.91 g/cm^3 to a high of 1.34 g/cm^3. Loaded densities for tracers are much higher than most other illuminants due to high set back forces. Fuel oxidizer ratios are similar to other illuminant mixtures. Heat of combustion varies over a wide range from a low of 2964 cal/g to a high of 7130 cal/g for tracer mixtures and from a low of 600 cal/g to a high of 8160 cal/g for igniter mixtures. Generally, heat of combustion is higher for tracer and igniter mixtures than for other illuminants.

Hygroscopicity data indicate that these mixtures did not readily absorb moisture at 95% relative humidity; however, this is not verified by the reported cases found in open

literature, nor is it what can be expected since the oxidizers are know to absorb moisture. This certainly was not the result obtained with similar amounts of oxidizer (strontium nitrate) in the case of red flares. There can be no other explanation offered except that the tests were conducted in accordance with specifications, although one may still consider these results as suspect based upon other formulations containing strontium nitrate and strontium peroxide. Thermal stability and weight loss data indicate that these mixtures are somewhat stable in spite of what has been cited to the contrary in open literature. The igniter mixtures do show a tendency to be more stable than the tracer mixtures.

Sensitivity of tracer mixtures vary with each mixture, but generally, these mixtures are less sensitive than the igniter mixtures. Generally, tracer mixtures are insensitive to friction, impact, and electrical spark. However, there are some exceptions. None of the mixtures (tracer or igniter mixtures) detonated as results of the card gap tests. There was some burning when initiated by a number 8 blasting cap. None of the mixtures exploded in the ignition and unconfined burning test. Igniter mixes and sub-igniter mixes were significantly more sensitive to electrical spark initiation. These mixtures were also tested for minimum dust concentration and energy for dust explosions; they have lower dust concentrations than tracer mixtures and are more easily ignitable.

The burn times for igniter mixtures were faster than the tracer mixtures. The burn time is more critical for the tracers in that they have to burn until they reach the target impact area. The dim igniter or igniter mixtures are primarily for fire transfer and are expected to burn much more rapidly. TNT equivalency values obtained on the tracer and the igniter mixtures indicate that these mixtures are only moderately reactive. TNT equivalency values of less than 10% would still warrant a DoD Class 1.3 if all other results of the classification tests were acceptable. Compared with other illuminants, these mixtures have a lower TNT equivalency value than photoflash mixtures or colored flares.

TABLE 23. SUMMARY OF PARAMETRIC, STABILITY AND SENSITIVITY DATA FOR TRACER AND TRACER IGNITER MIXTURES

		1	2	3	4	5	6	7	8	9	10
Autoignition temperature	°C	488	510	421	529	404	635	856	375	600	496
Decomposition temperature	°C	577	546	476	625	477	756	926	445	656	539
Density (bulk)	g/cm^3	1.26	1.18	0.95	0.91	0.96	1.34	1.16	1.19	1.21	1.19
Density (loading)	g/cm^3	2.4-3	2.4-3	2.6-3.6	2.6-3.6	2.2-2.8	-	2.2-3.6	2.2-3.2	2.6-3.4	2.6-3.6
Fuel/oxidizer ratio	x:1	0.53	0.45	0.98	0.66	0.3	0.26	0.48	0.2	0.11	0.3
Heat of combustion	cal/g	7130	5623	3316	2964	8160	-	3376	600	-	-
Hygroscopicity	95%	Poor	Fair	Poor	Fair	Good	Good	Fair	Good	Good	Good
Thermal stability	48 hr 75° C	Good	Good	Good	Good	Good	Good	Good	Good	Good	Good
Weight loss	18" vac 48 hr 50° C	0.037	0.046	0.053	0.026	0.026	0.08	0.051	0.06	0.06	0.036
Card gap test results		N.D.	N.D.	N.D.	N.D.	N.D.	N.D.	N.D.	N.D.	N.D.	N.D.
Detonation test results		Burning	Burning	N.D.	N.D.	N.D.	C.B.	C.B.	C.B.	N.D.	C.B.
Electrical spark		78	8	2	1.125	1.25	0.05	0.2	1.25	0.05	0.05
Electrostatic (min concern)	oz/ft^3	1.62	1.62	0.719	0.719	0.719	0.021	0.449	0.719	-	-
Friction (steel shoe)		N.R.	N.R.	N.R.	SNAPS	N.R.	N.R.	N.R.	SNAPS	SNAPS	SNAPS
Ignition and unconfined burning		No Expl	No Expl	No Expl	No Expl	No Expl	No Expl	No Expl	No Expl	No Expl	No Expl
Impact sensitivity		3.25	10	10	15	10	10	3.75	10	10	10
Burn time (bulk)	sec/cm	4.72	3.54	2.16	2.36	0.6	1.77	2.25	2.25	1.77	2.76
TNT equivalency	%	8	-	-	-	-	6	10	-	-	-

SUMMARY

Results varied with each type of illuminant mixture. Correlations and trends were not readily noticeable. Individual formulations with the addition of binders or changes in types of oxidizers or fuel had a more pronounced affect than if a mixture belonged to a particular grouping. However, there were some distinct differences between various types of illuminants. The comparison of the summary of results for illuminants is shown in table 24.

Autoignition and decomposition temperatures were the highest for the photoflash mixtures and the lowest for the colored flare mixtures. The high decomposition temperatures

TABLE 24. COMPARISON OF SUMMARY OF RESULTS FOR ILLUMINANTS

		Colored light flares/ stars	White light flares/ stars	Photo-flash	Tracers igniters sub-igniters
Autoignition temperature	° C	448 ± 57	460 ± 45	784 ± 64	528 ± 156
Decomposition temperature	° C	489 ± 62	551 ± 55	874 ± 23	604 ± 164
Density (bulk)	g/cm^3	0.8-0.95	0.92 ± 0.21	1.51 ± 0.23	1.11 ± 0.16
Density (loading)	g/cm^3	1.96 ± 0.36	1.86 ± 0.36	1.8	2.79 ± 0.54
Fuel/oxidizer ratio	x:1	0.4 ± 0.2	1.18 ± 0.48	0.67	0.48 ± 0.25
Gas volume	ml/g	-	61.4 ± 11	15	-
Heat of combustion	cal/g	2275 ± 241	2709 ± 250	2719 ± 79	4453 ± 2640
Heat of reaction	cal/g	1289 ± 144	1664 ± 294	1783 ± 24	-
Hygroscopicity	90%	Poor	Poor	Good	Poor to Good
Vacuum stability	ml/gas/40 hr	0.27 ± 11	0.28 ± 0.16	0.23 ± 0.02	-
Thermal stability	75° C	Good	Good	Good	Good
Card gap test		No Detonation	No Detonation	No Detonation	No Detonation
Detonation tests		Burning Slight Mushroom	Burning No Detonation	No Detonation	No Detonation
Electrical spark	Joules	11.02	9.75 ± 3.5	1.28 ± 0.89	3.11 ± 4.08
Friction (steel shoe)		Insensitive	Insensitive	Sensitive	Sensitive
Ignition and unconfined burning		No Explosion	No Explosion	No Explosion	No Explosion
Impact sensitivity	inches	11.75 ± 4.13	13.8 ± 6.3	10	9.06 ± 3.7
Burn time (bulk)	sec/cm	1.68 ± 1.79	1.46 ± 1.04	0.4	2.53 ± 1.22
TNT equivalency	%	56	30 ± 20	36 ± 12	8 ± 2

were due in part to the fuel used in the photoflash mixtures being aluminum, which has a high melting point. Tracer mixtures and white light mixtures were found to be near the mean value for all of the illuminant mixtures.

Bulk density varied with each type of mixture and each grouping and was generally similar for colored, white, and tracer mixtures. Photoflash mixtures were slightly more dense than the other types of mixtures. Loading density is dependent upon the end item

and functions. Tracer mixtures are loaded at higher densities than other illuminant mixtures due to the high set back forces from the weapons from which tracer end items are being fired. The effect of loading densities is inversely proportional to the burning time, which means that the higher the loading density the slower the burning time.

Fuel/oxidizer ratio (sometimes written by other authors as oxidizer/fuel ratio) is indicative of whether the mixture is fuel or oxygen rich. Dillehay [11] points out that there is an optimum burning rate for any given formulation. Increasing the burning rate by changing the oxidizer or fuel mixture beyond this optimum value does not result in an increase in candlepower, but increasing the burning rate by changing the fuel/oxidizer mixture when it is below optimum will result in an increase of output - in this case candlepower. If the formulation is above the optimum, decreasing the burn rate by adjusting the fuel/oxidizer ratio will result in an increase in the candlepower of the mixture. The tracers and igniter mixtures are generally found to be fuel rich while white and colored flares are somewhat oxygen rich.

Gas volume data are only available for white flare/star and photoflash mixtures and vary from a high of 61 $\pm$ 11 ml/g for white light to a low of 15 ml/g for photoflash mixtures. Pyrotechnic mixtures as a whole are not high gas producers when compared to explosives or propellants, but white light mixtures do generate more gas than some other type of mixtures. It can be assumed that colored light mixtures will generate similar quantities of gas as white light mixtures even though there is insufficient data for verification. Tracer mixtures, particularly the igniter mixtures, are not known as gas producing mixtures.

Heat of combustion varies from a high of 4453 cal/g for tracer mixtures to a low of 2225 for colored light. Heat of reaction is the highest for photoflash mixtures and the lowest for colored light. There were no data available for tracer or igniter mixtures. The caloric output of illuminant mixtures is generally on the same order of magnitude as the type of pyrotechnic mixture grouping.

Stability data showed the same general trend. Most of the illuminants are considered to be hygroscopic and have poor vacuum stability results. However, thermal stability data or 75° C International Heat Test results tend to show that these mixtures may not be as unstable as the hygroscopicity or vacuum stability results indicate.

Sensitivity of the various illuminant mixtures were more dependent upon chemical or mechanical parameters of a given material rather then the type or purpose of the mixture. Particle size of the fuel has a pronounced effect upon sensitivity by making it more sensitive; whereas, the particle size of the oxidizer ingredient does not show the same effect. The addition of a binder usually increases the sensitivity of a given formulation. The type of oxidizer used, chlorate versus a perchlorate, increases the sensitivity of a given mixture. Large quantities of additives act as a diluent and decrease sensitivity. These facts were borne out in a study conducted by Carrazza and Kaye[13].

It should be noted that, almost paradoxically, many of these mixtures that were sensitive to impact may, or may not be, sensitive to friction or electrical spark initiation or vice versa. In each case, the individual mixtures should be scrutinized for all levels of initiation stimuli and handled accordingly. Another interesting note is that just

because some mixtures have nearly the same formulation does not in any way mean that sensitivity to friction, electrical spark, or impact will be the same. No matter how subtle the change in the formulation may be, it is prudent for the developer to test for the various stimuli levels.

None of the illuminant mixtures tested exhibited characteristics of mass detonation as a result of the card gap tests. However, Weingarten [14] made an attempt to correlate the plate indentation value to some amount of contribution to depth of the deformation of the witness plate. There are no known results leading to good correlation. Several mixtures did cause slight mushrooming of the lead cylinder in the detonation test configuration. Those samples that did cause mushrooming did not show any marked difference in the card gap results or increased sensitivity. Ignition and unconfined burning results were consistent for all illuminant mixtures, proving only that pyrotechnic mixtures will burn readily when placed in fire; there were no indications of an explosion in this configuration.

Output data are at a minimum, very little work was performed in determining critical diameter, critical height, or pressure time. It has been believed for some time that a pyrotechnic mixture will not detonate; rather, a rapid combustion or a deflagration with some external pressure is the extent of the hazard. However, recent studies[15] of incident/accident investigations do not necessarily validate the above hypothesis. In fact, detonation propagation tests conducted by Petino[16] and investigations by Blumenthal and Spadoni[17] on typical processing equipment indicate that a reaction several orders of magnitude greater than a deflagration can result. It may be argued that such terms as high velocity detonation and low order detonation cannot be associated with pyrotechnics reaction; but when the therminal result of a catastrophic accident involves fatalities, it becomes a moot question as to the order or degree of detonation that occurred. A critical mass/diameter study recently conducted [18] indicates that, at a minimum, a low order detonation can occur with specific illuminant mixtures. This is also borne out by reported TNT equivalency data. Colored and white light, and photoflash mixtures have TNT equivalency values ranging from a high of 56% to a low of 30%. These values are indicative of a reaction that is more brisant than would be expected from a deflagration. Tracer mixtures and tracer igniter mixtures have low TNT equivalency values, generally less than 10%, which would allow these mixtures to be considered DoD Class 1.3 if all other sensitivity and stability parameters warrant it.

SMOKES

Noun	Type	Use
Screening	White Gray	Generation of continuous stream of white/ gray smoke to obscure vehicles position or troop movement.
Signaling	Colored	Daytime signaling and marking of friendly or enemy (foe) position or troop movement.

Pyrotechnic smoke production consists of white or colored chemical particles that are suspended in air by an exothermic reaction. Smoke devices are used in a similar manner as an illuminant for daytime signaling and marking when they are more efficient than an illuminant. Smoke devices are also used as an obscurant to conceal and/or confuse an enemy during troop movement. Smokes are normally produced pyrotechnically by one of two methods: 1) when the products of an exothermic reaction condense in the form of finely divided solid particles and 2) heat, generated by a pyrotechnic mixture, reacts to vaporize an inert or non-reacting compound which later condenses to form a smoke cloud. Screening smokes are generally produced by the first method and signaling smokes by the latter.

Screening smokes are mostly aerosols produced by the hydrolysis or solution of vapor products combustion by moisture in the atmosphere. There are basically two types: 1) white or red phosphorus from which the combustion products become a phorphorus pentoxide and in moist air becomes minute droplets of phosphoric acid, and 2) HC smoke mixes which rely upon the formation of zinc chloride to form the aerosol. Figures 39, 40, and 41 show typical screening smoke devices. Phosphorus smokes have good incendiary effects and are more efficient against IR detection than HC smokes. The important

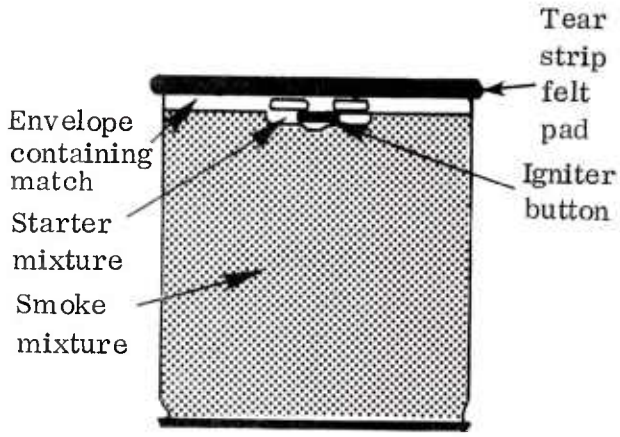

Figure 39. HC Smoke Pot, Mk 3 Mod 0

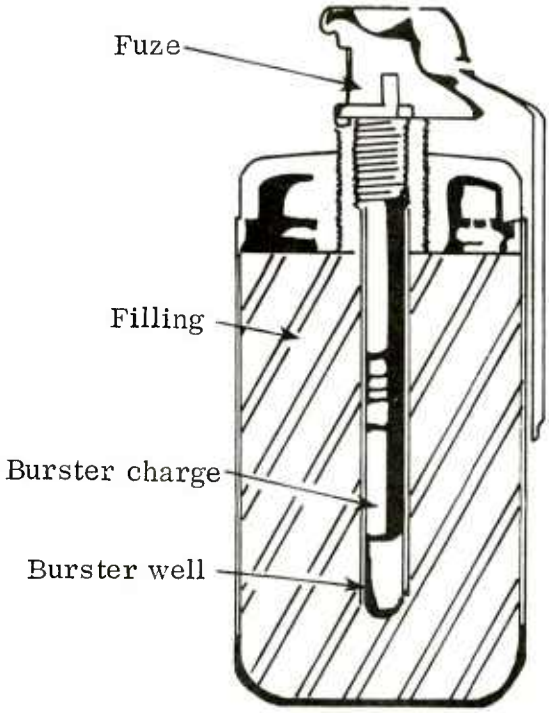

Figure 40. WP Smoke Grenade

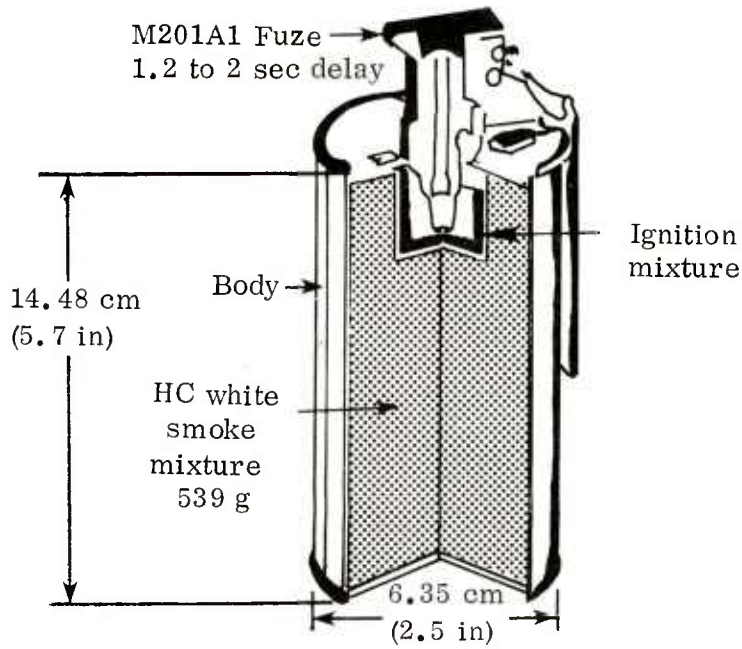

Figure 41. HC Smoke Hand Grenade, AN-M8

parameter for screening smokes is their obscuring power. Phosphorus smokes are more efficient as an obscurant since it takes less mixture to produce the same size cloud as generated by an HC mixture. To obscure effectively, the smoke should be gray or white, because it will then diffuse more light rays by either reflection or refraction than would a darker colored smoke.

Colored signals are produced by vaporizing dye stuffs by means of heating a mixture. To be successful, the vaporizing component (heat mixture) should provide sufficient heat to vaporize the dye completely without any decomposition of the dye, and the products of combustion should be gaseous with little residue. The properties of the dye stuff are important in that they should sublime below 300° C, be thermally stable, and the vapor should have a flash point. Colored smoke mixtures usually contain approximately equal parts of dye and pyrotechnic mixture. The most efficient pyrotechnic mixture is potassium chlorate with either lactose, sugar, or sulfur as the fuel and magnesium carbonate or sodium bicarbonate as a coolant. Figure 42 shows a typical colored smoke grenade. Colored signals may come in various colors, but the predominant ones are green, red, yellow, violet and orange. Although other colors such as brown, pink and blue have been formulated, they do not fare well in practical use because of background and other problems. The persistance of the color (even under windy conditions) and visibility of the smoke against various backgrounds are important parameters of a colored signaling device.

DATA DISCUSSION

Data sheets for all smokes are shown in Appendix A. Formulas for individual screening smokes and colored signal devices are shown in tables 25, 27, 29, 31 and 32. Summaries of the data are given in tables 26, 28, 30, 32 and 34. Table 35 is a comparison of summaries of results for screening and colored smokes.

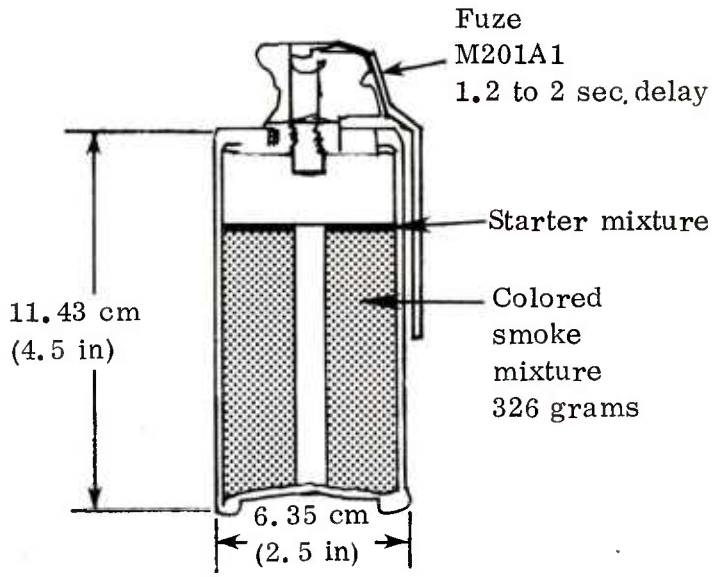

Figure 42. M-18 Colored Smoke Grenade

Screening Smokes

Screening smoke formulas are given in table 25. Formula 1 is the standard HC smoke employed in the AN-M8 grenade and the HC Mk 3 Mod 0 smoke pot. The burning rate is adjusted by varying the amount of aluminum in the mixture from 3 to 10%. This formula is a grayish white smoke that is slightly toxic. Formula 2 is a new screening smoke currently being developed jointly by the U.S. and NATO countries. It has a very long burn time and is a good obscurant. Formula 3 and 4 were two mixtures that were tested for ARRADCOM, Dover, New Jersey (formally Picatinny Arsenal).

TABLE 25. TYPICAL SCREENING SMOKE FORMULATIONS

	1	2	3	4
Hexachloroethane	43.53			
Zinc oxide	46.47			34.6
Aluminum	9			3.6
Red phosphorous		63	80	
Butyl rubber/methylene chloride		37		
Barium nitrate			20	
Ammonium perchlorate				26.7
Dechlorane				30.7
VAAR				3.5

The parametric data of these formulations indicate that, other than the HC smoke, decomposition temperatures are higher than other type smoke mixtures. Stability data indicate that HC smoke is unstable. This may be due in part to the sublimation at the hexachloroethane at a temperature of less than 60° C. Vacuum stability and thermal stability results of HC are indicative of an unstable mixture. The zinc oxide in this formulation

is hygroscopic; and this ability to absorb moisture causes the HC mixture to become unstable. As water is gained in the stored munition, a certain amount of chloride is dissolved and this gaseous chloride solution will react with the aluminum. Under these conditions, hydrogen is produced and it reacts with the hexachloroethane to make the mixture even more unstable. McKown and Pankow[19] performed a study on the stability and sensitivity of HC smoke mixture. The other screening smokes seem to be somewhat more stable than the HC smoke mixture. (Table 26.)

TABLE 26. SUMMARY OF PARAMETRIC, STABILITY AND SENSITIVITY DATA FOR SCREENING SMOKES

		1	2	3	4
Autoignition temperature	° C	167	460	402	314
Decomposition temperature	° C	193	530	464	363
Density (bulk)	g/cm^3	1.14	1.61	1.7	1.2
Density (loading)	g/cm^3	1.6-1.9	1.9-2.2	1.9-2.2	1.6-1.9
Fuel/oxidizer ratio	x:1	0.2	2.1	4.1	0.58
Heat of combustion	cal/g	940	-	5090	1189
Hygroscopicity	90%	Fair	Good	Poor	Good
Thermal stability	75° C	Poor	Good	Good	Good
Vacuum stability	ml/gas/40 hr	0.24	-	0.06	0.08
Card gap		N.D.	N.D.	N.D.	N.D.
Detonation test		N.D.	Burning	Burning	N.D.
Electrical spark	Joules	0.122	3.12	0.002	11.02
Friction (steel shoe)		INSENS	SENS	SENS	INSENS
Ignition and unconfined burning		No Expl	No Expl	No Expl	No Expl
Impact sensitivity	inches	10	715	8	7
Burn time	sec/cm	9.8	236	236	1.97
Critical diameter	meter	1	0.76	-	-
Critical height	cm	218	60	-	-
TNT equivalency	%	0	0	0	0

HC smoke is sensitive to electrical spark, moderately sensitive impact, and insensitive to friction, strong shock in the card gap test, and mild shock from a number 8 blasting cap in the detonation test. HC smoke failed to burn when exposed to open flame in the ignition and unconfined burning tests. The red phosphorus/butyl rubber-methylene chloride formula is relatively insensitive to electrical spark, sensitive to friction and insensitive to card gap, detonation tests, and impact. This mixture has a very long burn time in the ignition and unconfined burning tests. Formula 3, another variation in a red phosphorus formulation, is sensitive to electrical spark and friction and relatively sensitive to impact.

Negative results were obtained in the card gap, detonation, and ignition and unconfined burning tests. Formula 4 is insensitive to friction and moderately sensitive to electrical spark and impact. Negative results were obtained on all other sensitivity tests.

Output data varies with each formula. Burn time (sec/cm) ranges from a low of 1.77 cm/sec to a high of 236 cm/sec for the red phosphorus formulation. HC smoke has values of approximately 10 sec/cm. These values are quite slow burn times as far as pyrotechnics are concerned. Formulas 1 and 2 were tested for critical height and diameter and the results indicate that critical height/diameter does not constitute a hazard. Negative results were obtained up to and including several orders of magnitude greater than that found in either explosives or some propellants. The detonations or explosions occured in diameters greater than a meter or in heights greater than 218 cm. TNT equivalency tests of formulas 1 and 2 indicate a value less than 1% when compared with TNT.

Colored Smokes

Colored smoke formulations use sulfur, lactose, and sugar as the fuel and potassium chlorate as the oxidizer. The use of the chlorate makes these mixtures more sensitive than other types of pyrotechnic mixtures, and a coolant or diluent such as sodium bicarbonate or magnesium carbonate are used to densensitize the mixtures. Potassium chlorate mixed with sulfur alone is so sensitive that thumb pressure has caused ignition of this mix. Also, it has been reported by Pankow[20] that such a mixture has a TNT equivalency of approximately 35%. The dye stuff is added to the heat mixture in approximately a 1:1 ratio.

Green Smoke

Green smoke formulations are given in table 27. Formula 1 is the standard M18 green smoke, formulas 2 and 3 are new formulations that are proposed for production utilizing a new fluid bed granulation process. Formula 5 is the Navy standard green smoke, and formulas 6 and 7 were supplied by ARRADCOM, Dover, New Jersey for test. Formulas 8 and 9 are now obsolete; 10 is used in a ground parachute rocket; formula 11 is used in

TABLE 27. TYPICAL GREEN SMOKE FORMULATIONS

	1	2	3	4	5	6	7	8	9	10	11	12
Dye yellow	4		5.65	4.7	5	15.5				12	4.7	
Benzanthrone	8			9.4	10						9.4	
Dye solvent green	28	40	39.45	32.9	33	33	30.7	42	15	28	32.9	50
Sodium bicarbonate	22.6	24.6	14.75		4		3	26		2		
Potassium chlorate	27	25.3	28.85	31.5	28	31	31	23	33	35	32	31.8
Sulfur	10.4	10	11.3					9				
Lactose				18					26		18	16.7
Magnesium carbonate				3.5							3	
Sugar (fine)					16	18.5	22			23		
Sil-o-cel (binder)					4							
VAAR						2	2					
Asbestos powder							2.25					
Smoke yellow B10							10.8					
Indigo									26			
Binder (NC/acetone 8/92)												

M 64, and 12 is loaded in the 105 mm M2 canister. Formula 11 is a slight variation of formula 4, and there are minor differences in test results. A study was conducted by McKown and McIntyre[21] to determine the effect of the dye as part of the total reaction. It was determined that the dye made no significant contribution to the pyrotechnic reaction.

Table 28 shows the summary of parametric, stability, and sensitivity data. There are no significant characteristics exhibited by these mixtures that warrant special consideration. Autoignition and decomposition temperatures range from a low of 130° C and 151° C to a high of 192° C and 222° C respectively. Bulk density varies between 0.7 g/cm^3 to 0.9 g/cm^3 and loading densities range from 1.3-1.6 g/cm with 1.35 g/cm. Fuel oxidizer ratios vary for each type of fuel and generally these mixtures are fuel rich. Gas volume ranges from a low of 14 ml/g to a high of 22 ml/g. These values are not considered highly gaseous. Heat of combustion range from a low 2057 cal/g to a high of 4688 cal/g. Those mixtures with sugar as a fuel have higher values; whereas, sulfur base smokes have the lowest caloric output.

TABLE 28. SUMMARY OF PARAMETRIC, STABILITY AND SENSITIVITY DATA FOR GREEN SMOKES

		1	2	3	4	5	6	7	8	9	10	11	12
Autoignition temperature	° C	192	163	154	170	-	130	147	179	165	136	175	170
Decomposition temperature	° C	222	190	178	196	-	151	170	207	191	157	195	195
Density (bulk)	g/cm^3	0.89	0.72	0.76	0.8	-	-	-	0.79	0.79	0.77	0.8	0.8
Density (loading)	g/cm^3	1.3-1.6	1.3-1.6	1.3-1.6	1.3-1.6	-	1.3-1.6	1.3-1.6	1.3-1.6	1.3-1.6	1.3-1.6	1.3-1.6	1.3-1.6
Fuel/oxidizer ratio	x:1	0.39	0.39	0.39	0.57	0.57	0.58	0.71	0.39	0.79	0.66	0.53	0.56
Gas volume	ml/g	21.6	22	20	14	-	-	-	21	16.3	25	15	14.2
Heat of combustion	cal/g	2190	1770	3270	2960	-	4688	4142	2057	2763	3211	2955	2960
Heat of reaction	cal/g	1460	1146	1121	1781	-	428	390	813	790	945	1163	1150
Hygroscopicity		Fair	Good	Fair	Good	Good	Fair	Poor	Good	Good	Good	Good	Good
Vacuum stability	ml/gas/40 hr	0.01	0.01	0.01	0.01	0.01	Burned	0.98	0.11	0.1	0.1	0.01	0.01
Thermal stability		Good	Good	Good	Good	Good	Good	Good	Good	Good	Good	Good	Good
Weight loss	%	0.621	0.75	0.85	0.462	-	-	-	0.69	0.521	0.746	0.301	0.211
Card gap		N. D.	N. D.	N. D.	N. D.	N. D.	N. D.	N. D.	N. D.	N. D.	N. D.	N. D.	N. D.
Detonation		N. D.	N. D.	N. D.	N. D.	N. D.	N. D.	N. D.	N. D.	N. D.	N. D.	N. D.	N. D.
Electrical spark	Joules	0.131	>8	>8	0.121	-	>11.02	11.02	0.152	0.136	0.5	0.12	0.12
Electrostatic	oz/ft^3	0.04	0.719	0.719	0.007	-	-	-	0.03	0.016	0.024	0.007	0.007
Electrostatic	Joules	≥50k	≥50k	≥50k	>50	-	-	-	>50	>50	>50k	>50	>50
Friction (steel shoe)		Insens.	Insens.	Insens.	Insens.	Insens.	Insens.	Insens.	Insens.	Insens.	Insens.	Insens.	Insens.
Ignition and unconfined burning		No expl.	No expl.	No expl.	No expl.	No expl.	No expl.	No expl.	No expl.	No expl.	No expl.	No expl.	No expl.
Impact sensitivity	inches	15	10	10	15	15	25	22	15	15	15	15	15
Burn time	sec/cm	5.9	8.77	8.84	6.5	-	0.4	1.97	5.3	5.9	2.36	6.5	6.5
TNT equivalency	%	4	5	4	11	-	-	8	4	0	3	3	3

Stability of these mixtures are quite good as they do not readily absorb moisture. Hygroscopicity, thermal stability, vacuum stability, and weight loss results are quite good.

Green smokes are insensitive to card gap, detonation test, and friction. These mixtures are sensitive to electrical spark and the values range from a low of 0.03 joules to a high greater than 11.02 joules but less than 50 joules. Care should be exercised not to generate

static electricity in the handling of these materials. Impact sensitivity of these mixtures range from a low of 10 inches to a high of 25 inches. These values are relatively moderate and would compare with the sensitivity of non-initiating high explosives.

Burn time values range from 0.4 sec/cm to 8.84 sec/cm. Burn time is grossly affected by density and surface area and these values increase with increasing densities. TNT equivalency values are all less than 10% which indicates a minimum explosive hazard.

Red Smoke

Red smoke formulas are shown in table 29. These formulas are similar to other colored smokes. The same fuels and oxidizers are used and the fuel oxidizer ratios are similar for each type of fuel as other smoke mixtures. The percentage of dye and diluents are also in the same ratios.

TABLE 29. TYPICAL RED SMOKE FORMULATIONS

	1	2	3	4	5	6	7	8	9	10	11	12	13	14
Dye red	40	47.5	40.2	47	36	40	54	40	48	36	41.2	36.9	49	50
Sodium bicarbonate	25		14.3		1	22		17		18	21.8	16.6		
Potassium chlorate	26	29.5	31.3	31	35	27.4	23	24	35	30.2	25.1	32.1	29	27
Sulfur	9		12.3			10.6		5		11.8	9.4	12.4		
Magnesium carbonate		5											4	5
Lactose		18											18	18
VAAR				2										
Sugar				20	26.5		23		17					
Asbestos powder					1.5									
Polyester resin								14			2.5	2.5		
Binder*														
Dextrin			1.9							4				

*Nitrocellulose/acetone 3/92

A summary of parametric, stability, and sensitivity data is given in table 30. Parametric values are similar to those obtained on the greem smoke mixtures. Apparent bulk density values are slightly lower than green smokes and the differences may be in the dye component.

Stability data indicate that these mixtures are quite stable even though several formulas indicate instability as the result of the vacuum stability tests. These mixtures are not prone to be very hygroscopic and have a good shelf life.

These mixtures are insensitive to the card gap test, detonation test, ignition and unconfined burning test, and friction. Red smokes are relatively sensitive to electrical spark initiation with the exception of formulas 3 and 4. These mixtures are moderately impact-sensitive on the same order of magnitude as green smoke and comparable to some propellants and non-initiating explosives.

The burn time data are similar to green smoke and other colored smoke mixtures and behave in the same manner; that with increasing density there is an increase in burn time. Critical diameter and height data indicate that these mixtures have large diameters

TABLE 30. SUMMARY OF PARAMETRIC, STABILITY AND SENSITIVITY DATA FOR RED SMOKE

		1	2	3	4	5	6	7	8	9	10	11	12	13	14
Autoignition temperature	°C	170	170	130	136	147	144	138	134	142	132	160	151	164	164
Decomposition temperature	°C	197	197	150	157	170	166	160	155	165	153	186	175	190	190
Density (bulk)	g/cm^3	0.85	0.86	0.56	-	-	0.82	0.8	0.85	0.88	0.8	0.79	0.82	0.72	0.72
Density (loading)	g/cm^3	1.46	1.3-1.5	1.4	1.3-1.5	1.3-1.5	1.3-1.5	1.3-1.5	1.3-1.5	1.3-1.5	1.3-1.5	1.3-1.5	1.3-1.5	1.3-1.5	1.3-1.5
Fuel/oxidizer ratio	x:1	0.35	0.61	0.62	0.65	0.76	0.39	1	0.21	0.48	0.39	0.37	0.39	0.62	0.67
Gas volume	ml/g	26.3	14.5	25	-	-	25	30	18	22	27	25	28	16	16
Heat of combustion	cal/g	2280	2990	2840	4432	3742	2473	3150	2115	3320	2210	2300	2450	2630	2590
Heat of reaction	cal/g	1146	1475	1321	413	461	1091	946	973	763	1066	1206	1301	1153	-
Hygroscopicity	95%	Good	Good	Good	Fair	Poor	Good	Good	Good	Good	Fair	Fair	Fair	Fair	Fair
Vacuum stability	ml/gas/40 hr	0.01	0.01	0.01	0.16	-	0.014	0.11	0.09	0.04	0.011	0.01	0.01	0.019	0.02
Thermal stability	75° C	Good	Good	Good	Good	Good	Good	Good	Good	Good	Good	Good	Good	Good	Good
Weight loss	%	0.85	0.75	0.93	0.9	0.9	0.8	0.8	0.95	0.92	1.04	0.96	1.21	0.88	0.91
Card gap		N. D.	N. D.	N. D.	N. D.	N. D.	N. D.	N. D.	N. D.	N. D.	N. D.	N. D.	N. D.	N. D.	N. D.
Detonation test		N. D.	N. D.	N. D.	N. D.	N. D.	N. D.	N. D.	N. D.	N. D.	N. D.	N. D.	N. D.	N. D.	N. D.
Electrical spark	Joules	0.12	0.24	>8	>11.02	>11.02	0.2	0.35	0.27	0.3	0.15	0.223	0.196	0.25	0.25
Friction (steel shoe)		Insens.	Insens.	Insens.	Insens.	Insens.	Insens.	Insens.	Insens.	Insens.	Insens.	Insens.	Insens.	Insens.	Insens.
Ignition and unconfined burning		No expl.	No expl.	No expl.	No expl.	No expl.	No expl.	No expl.	No expl.	No expl.	No expl.	No expl.	No expl.	No expl.	No expl.
Impact sensitivity	inches	15	12	10	18	15	15	10	15	15	15	15	15.	15	15
Burn time	sec/cm	7.9	3.2	5.43	0.4	0.98	6.39	1.38	5.51	1.77	6.1	5.71	6.5	3.74	4.13
TNT equivalency	%	7	6	7	8	9	6	9	7	8	8	7	8	6	6

and height values to be considered explosive in nature. Test values of 1-meter diameter and 122-cm height indicate negative results. TNT equivalency values range from 4 to 10% which typifies the majority of the colored smoke mixtures and constitutes a minimal explosive hazard.

Yellow Smoke

Yellow smoke formulas are shown in table 31. The same fuels, oxidizers, and coolants (or diluents) are used as in red, green, or violet smoke mixtures. The ratio of ingredients are similar in percentages.

TABLE 31. TYPICAL YELLOW SMOKE FORMULATIONS

	1	2	3	4	5	6	7	8
Dye Yellow	14	18	34	51	41	15	17	46
Benzanthrone	24.5	32	8			32	31	12.5
Sulfur	8.5				9			
Potassium chlorate	20	25	26	30	23	30	27	31
Sodium bicarbonate	33		3		27	3		
Lactose		16					14	10.5
Magnesium carbonate		9						
Sugar			15	17		20	11	
Sil-o-cel binder			4					
VAAR				2				

Parametric, stability, and sensitivity data are shown in table 32.

TABLE 32. SUMMARY OF PARAMETRIC, STABILITY AND SENSITIVITY DATA FOR YELLOW SMOKE

		1	2	3	4	5	6	7	8
Autoignition temperature	° C	170	197	-	125	160	191	174	169
Decomposition temperature	° C	196	227	-	144	184	221	201	195
Density (bulk)	g/cm^3	0.85	0.61	-	-	0.78	0.75	0.71	0.77
Density (loading)	g/cm^3	1.33	1.33-1.6	1.3-1.6		1.3-1.6	1.3-1.6	1.3-1.6	0.3-1.6
Fuel/oxidizer ratio	x:1	0.43	0.6	0.58	0.57	0.39	0.67	0.52	0.34
Gas volume	ml/g	35	22	-	-	28	32	25	21
Heat of combustion	cal/g	2280	2760	-	4807	2110	2940	2635	2475
Heat of reaction	cal/g	1019	-	-	392	863	683	867	902
Hygroscopicity	90%	Good	Good	-	Poor	Good	Poor	Fair	Fair
Vacuum stability	ml/gas/40 hr	0.006	0.01	-	Burned	0.008	0.01	0.01	0.009
Thermal stability	75° C	Good	Good	Good	Good	Good	Good	Good	Good
Weight loss	%	0.75	0.15	-	0.71	1.13	1.03	0.057	0.86
Card gap test		N.D.	N.D.	N.D.	N.D.	N.D.	N.D.	N.D.	N.D.
Detonation test		N.D.	N.D.	N.D.	N.D.	N.D.	N.D.	N.D.	N.D.
Electrical spark	Joules	0.11	0.1	-	11.02	0.153	0.275	0.3	0.275
Friction (steel shoe)		Insens	Insens	Insens	Insens	Insens	Insens	Insens	Insens
Ignition and unconfined burning		No Expl	No Expl	No Expl	No Expl	No Expl	No Expl	No Expl	No Expl
Impact sensitivity	inches	15	10	15	16	15	15	10	10
Burn time	sec/cm	7	4.9	-	1.97	6.3	2.76	5.12	5.9
TNT equivalency	%	5	7	-	5	5	6	7	6

Parametric data are similar to green or red smoke values. In fact, there was no significant differences in autoignition or decomposition temperatures, densities, gas volumes, or heats of combustion. Fuel/oxidizer ratios varied as a function of the type fuel.

Hygroscopicity values were slightly different for these mixtures, as there was more of a tendency to absorb moisture. Vacuum stability data indicate that these mixtures are quite stable. This was also noted in the thermal stability and weight loss tests.

Yellow smoke mixtures were insensitive to card gap, detonation, ignition and unconfined burning tests, and friction. Electrical spark sensitivity is on the same order of magnitude as red and green smoke mixtures. Impact sensitivity is comparable to other colored smoke mixtures.

The burn time (sec/cm) values were on the same order of magnitude as other colored smokes. TNT equivalency values ranged from a low of 5 % to a high of 7 %. These values are slightly lower than other colored smoke mixtures and the same general trend is noticeable in that while these mixtures might possibly explode, the probability of such an occurrence is quite high. That is, the explosive hazards associated with these mixtures are minimal.

Violet Smoke

Violet smoke formulations are given in table 33. The same fuels, oxidizers, and diluents are used as those found in the green, red, and yellow smoke mixtures. The ingredients

are mixed in similar ratios with the type of fuel employed being the determining factor. Formula 4 utilizes a different coolant; however, this formula is not currently being loaded in an end item.

TABLE 33. TYPICAL VIOLET SMOKE FORMULATIONS

	1	2	3	4	5
Dye violet	42	42	47	44	47.5
Sodium bicarbonate	24	26			4.5
Potassium chlorate	25	23	22	30.2	28
Sulfur	9	9		11.8	
Binder					
Lactose			24		
Magnesium carbonate			7		
Sugar					18
Asbestos					2
Potassium bicarbonate				14	

Parametric, stability, and sensitivity data are given in table 34. There are no appreciable differences in the parametric results of red, green, or yellow mixtures. Density values were slightly lower than green or yellow, but this is due in part to the dye versus the other ingredients of the mixtures.

Hygroscopicity data vary significantly with these mixtures, as compared to other mixtures, since several of these mixtures had a tendency to absorb moisture. Vacuum stability data for mixtures 4 and 5 were above the criteria set to indicate a stable mixture. However, thermal stability and weight loss values indicate that these mixtures may not be as unstable as the vacuum stability results might indicate.

These mixtures are insensitive to card gap, detonation, ignition and unconfined burning tests, and insensitive to friction. These mixtures are more sensitive to impact than the other colored smoke mixtures, and the electrical spark sensitivity is on the same order of magnitude as other smoke mixtures. Formula 2 is a granulated mixture with relatively large particle size. Due to the decrease in surface area, this value was significantly higher than the other mixtures. Electrostatic measurements in the Hartmann apparatus indicate that these mixtures will react in dust clouds, and the energy required to initiate the dust cloud ranges from a minimum for formula 1 and 4 to high amounts of energy for mixes 2, 3 and 5. However, the reaction was found by Wilcox[22] to be a weak reaction, constituting minimal dust explosion hazards with a slow rate of pressure rise.

Burn time data are similar to other colored smoke mixtures. Critical height and diameter data indicate that these mixtures have large heights/diameters and are not considered

explosive in geometries normally found in the manufacturing process. However, as with other smoke mixtures, this can be modified under conditions of heavy confinement. Formulas 1 and 2 have been tested quite extensively for critical height and diameter and found not to have exploded except under conditions of extreme confinement. Then the reaction, while greater than a pneumatic rupture, was several orders of magnitude less than that of a mass detonation[23,24 and 25]. TNT equivalency data also indicate that the reactions associated with these mixtures constitute minimal explosive hazards since the TNT equivalency of these mixtures is less than 10%.

TABLE 34. SUMMARY OF PARAMETRIC, STABILITY AND SENSITIVITY DATA FOR VIOLET SMOKE

		1	2	3	4	5
Autoignition temperature	° C	208	166	182	173	178
Decomposition temperature	° C	240	190	210	200	206
Density (bulk)	g/cm^3	0.76	0.76	0.75	0.75	0.77
Density (loading)	g/cm^3	1.46	1.46	1.46	1.4	1.4
Fuel/oxidizer ratio	x:1	0.36	0.39	1.09	0.39	0.64
Gas volume	ml/g	23.6	22	19	22	30
Heat of combustion	cal/g	2550	2110	2430	2200	2760
Heat of reaction	cal/g	1131	1109	967	1086	869
Hygroscopicity	90%	Poor	Good	Poor	Fair	Fair
Vacuum stability	ml/gas/40 hr	0.01	0.01	0.01	0.021	0.019
Thermal stability	75° C	Good	Good	Good	Good	Good
Weight loss	%	.52	1.46	1.1	0.96	1.3
Card gap test		N.D.	N.D.	N.D.	N.D.	N.D.
Detonation test		N.D.	N.D.	N.D.	N.D.	N.D.
Electrical spark	Joules	0.16	>8	0.21	0.2	0.3
Electrostatic (concentration)	oz/ft^3	0.021	>0.719	0.719	0.360	0.719
Electrostatic (energy)	Joules	0.025	>50	50	0.3	50
Friction (steel shoe)		Insens	Insens	Insens	Insens	Insens
Ignition and unconfined burning		No Expl	No Expl	No Expl	No Expl	No Expl
Impact sensitivity	inches	15	10	10	10	10
Burn time	sec/cm	5.98	6.02	1.97	5.51	3.54
Press time	psi/msec	200/800	196/832	250/800	-	-
TNT equivalency	%	6	6	9	5	5

Orange Smoke

Orange smoke mixtures were not discussed, mainly due to the fact that no work was accomplished by this test agency on any of the various formulations currently being used, nor could any information on classification, parametric, or sensitivity data be found.

SUMMARY

A comparison of the summary of results for screening and colored smokes is shown in table 35. Autoignition and decomposition temperatures for the screening smokes are higher than the colored smokes. Colored smoke values are similar for all colors and decomposition temperatures are generally lower than those found for other types of pyrotechnic mixtures. Screening smokes have higher bulk and loading densitites than colored smokes; and the fuel/oxidizer ratios are also different, being higher for the screening smokes. There were no gas volume measurements taken for the screening smokes, but the efficiency of these mixtures would indicate that the gas volume values are higher than those measured for the signaling smokes. Heats of combustion and reaction for the screening smokes range from a low of 940 cal/g to a high of 5090 cal/g. This spread in range is much higher than the values for colored smoke which ranges from 1770 and 390 cal/g to a high of 4807 and 1475 cal/g respectively.

Colored smokes have a tendency to be more stable than the screening smokes. HC smoke is very hygroscopic due to the zinc oxide in the formula. Colored smokes on an average absorbed less than 7% moisture at 95% humidity, while screening smokes average 12% moisture at the same humidity level. Thermal stability results were generally good for all mixtures with the exception of the HC smoke which indicated a 43% weight loss after 48-hour storage at 75° C. This was primarily due to the sublimation of hexachloroethane at approximately 60°C. This was detected by McKown and Pankow [19]. Vacuum stability data indicated that some of these mixtures were unstable, but as a whole, this group of pyrotechnics are far more stable than either illuminants, initiators, or delays. However, several samples burned after 10 to 16 hours in the oven. The 120°C-heat applied during the vacuum stability test is near the autoignition level of these mixtures. Weight loss values followed the same trend as the hygroscopicity data in that higher weight losses due to volatile and moisture were noted for screening smokes than for colored smoke. The percentage values were lower than the mositure absorbed at the 95% level, but in some cases were greater than the amount of moisture absorbed at the 58% humidity level.

Sensitivity data indicate that these mixtures are somewhat more sensitive than other types of pyrotechnics. None of the mixtures tested showed any tendency to mass detonate as the result of the card gap configuration. Some materials, particularly the red phosphorus mixture, would ignite and burn in the detonation test configuration; otherwise, all of the other mixtures would scatter and remain unignited. In any event, there was no evidence of mushrooming of the lead cylinders. Again, the red phosphorus mixtures were sensitive to friction but none of the other mixtures were. All of the pyrotechnic mixtures, with the exception of HC white smoke, performed as a pyrotechnic and burned when tested in the ignition and unconfined burning configuration. The burn times were relatively slow and this indicates that accidental thermal initiation would cause the materials to detonate unless other parameters were satisfied. Electrical spark sensitivity values varied from a low of 0.01 joules to a high of 50 K joules for violet smoke and HC respectively. The colored smokes are quite sensitive, with the exception of several formulations,

TABLE 35. COMPARISON OF SUMMARY OF RESULTS FOR SMOKE MIXTURES

		Screening smokes	Colored signal smokes			
			Green	Red	Yellow	Violet
Autoignition temperature	° C	336 ± 128	162 ± 19	142 ± 26	170 ± 23	181 ± 16
Decomposition temperature	° C	388 ± 21	187 ± 21	772 ± 17	196 ± 28	210 ± 19
Density (bulk)	g/cm^3	1.41 ± 0.28	0.79 ± 0.04	0.79 ± 0.09	0.75 ± 0.08	0.76 ± 0.008
Density (loading)	g/cm^3	1.6-2.2	1.3-1.6	1.3-1.5	1.3-1.6	1.44 ± 0.04
Fuel/oxidizer ratio	x:1	1.7 ± 1.7	0.54 ± 0.13	0.54 ± 0.21	0.51 ± 0.11	0.57 ± 0.31
Gas volume	ml/g	-	19 ± 4	22 ± 7	22 ± 9	23 ± 4
Heat of combustion	cal/g	2406 ± 2327	2997 ± 860	2823 ± 657	2858 ± 904	2410 ± 262
Heat of reaction	cal/g	-	1122 ± 518	1024 ± 317	788 ± 222	1032 ± 111
Hygroscopicity	90%	Poor to Good	Poor to Good	Good	Poor to Good	Poor to Good
Vacuum stability	ml/gas/40 hr	0.13 ± 0.09	0.12 ± 0.28	0.04 ± 0.05	0.009 ± 0.001	0.014 ± 0.006
Thermal stability	75° C	Poor to Good	Good	Good	Good	Good
Weight loss	%	43	0.573 ± 0.216	0.91 ± 0.11	0.67 ± 0.41	1.07 ± 0.4
Card gap test		N.D.	N.D.	N.D.	N.D.	N.D.
Detonation test		Burning	N.D.	N.D.	N.D.	N.D.
Electrical spark	Joules	3.56 ± 5.17	4.12 ± 5.47	2.54 ± 4.59	1.94 ± 4.03	2.38 ± 4.83
Electrostatic (minimum concentration)	ox/ft^3	1.62	0.174 ± 0.309	0.162 ± 0.274	0.192 ± 0.291	0.604 ± 0.62
Electrostatic (minimun energy)	Joules	>50K	27.8K ± 26.3K	50K	50-50K	25-50K
Friction (steel shoe)		SENS	INSENS	INSENS	INSENS	INSENS
Ignition and unconfined burning		No Expl	No Expl	No Expl	No Expl	No Expl
Impact sensitivity	inches	10 ± 4	15.6 ± 4.2	13.6 ± 3.3	13.2 ± 2.7	11 ± 2
Burn time	sec/cm	121 ± 133	5.35 ± 2.7	3.8 ± 2.5	3.76 ± 2.4	4.6 ± 1.8
Critical diameter	meter	>1	>0.98	>1.35	>1.37	>1.37
Critical height	cm	218	>137	>130	>130	>152
Pressure time	psig/msec	0/341	274/3433	411/756	288/1400	215/810
TNT equivalency	%	0	4.5 ± 3	7.3 ± 1.06	5.9 ± 0.9	6.2 ± 1.6

and should be treated with care during manufacturing and handling so that static electricity is not allowed to build up. The red phosphorus mixture for the screening smokes was also sensitive to electrical spark, much more so than HC smoke. Impact sensitivity of smoke composition is less than other types of pyrotechnic mixtures and are comparable to some propellants or non-initiating high explosives.

The burn time results varied with each type of mixture depending upon density and surface area. None of the values indicate that these mixtures burn at a rapid rate.

Critical diameter and critical height values are found to be greater than 1 meter and greater than 150 cm respectively. These values exceed the geometries of the mixing and handling equipment used in manufacturing of bulk and end items. However, heavy confinement will reduce these values considerably. TNT equivalency values for all of the smoke mixtures were found to be less than 10% with the exception of several colored smoke formulations. Such low values would indicate that explosive hazards associated with these mixtures are minimal. Pressure time data strengthen this hypothesis in that pressure build up is slow when compared to propellants or explosives. However, as a precautionary measure, it should be noted that explosive type reactions have occurred, and these will be discussed in a later chapter.

GAS

Noun	Type	Use
Gas	High Pressure	Propelling charge, performs a mechanical function
	Pure Chemical	Generation of a pure chemical such as oxygen, nitrogen, hydrogen tear gas

There are two general types of gas producers: 1) high pressure, and 2) pure chemical. High pressure gases are used as compressible fluids to perform purely mechanical functions. The chemical composition of the gas produced would be of little consequence. Pure gas producers must generate a pure chemical composition such as nitrogen, oxygen, sulfure dioxide, or hydrogen, or else disseminate a vaporized pure compound such as an irritant or incapacitant.

High pressure gas producers perform mechanical work such as propelling a projectile or rocket, pushing a piston, or driving a turbine. Characteristics of these mixtures should be that they are safe to handle, easily ignitable, economical to use, non-hygroscopic, and produce a fairly large quantity of gas from a small package. Black powder was first used as the primary high pressure gas producer; however, it has been replaced by other mixtures because it was found to be hygroscopic and left an undesirable residue. Formulas 1 and 2 are two types of replacement mixtures. It should be pointed out that formula number 2 is somewhat hygroscopic but the residue is much less than black powder. Figures 43 and 44 show two types of gas producers used to perform mechanical work.

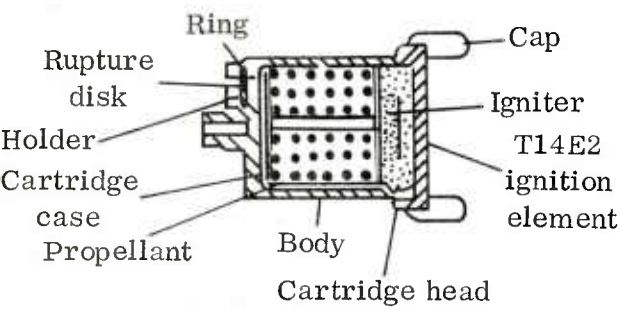

Figure 43. Gas Generator

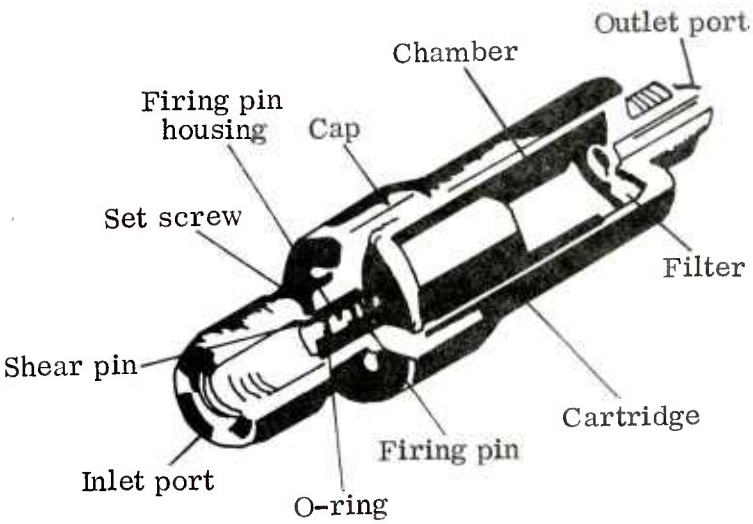

Figure 44. Gas Operated Initiation MK 10 Mod 0

Gas generators differ from gas actuated devices only in the output. There are basically two types of devices: those of short duration, called initiators, which produce gas for only milliseconds; and those of longer duration lasting up to several minutes. The distinct characteristic of these systems is that they produce high pressures ranging from a low of 4.14 MPa to 12.4 MPa (600-1800 psi). Such devices are used for driving a turbine, ejectors, cutters, removers, and thrusters.

Propulsion charges used in illuminants or signals are different in that they are built into the basic end item, and their purpose is to propel the main charge to its function altitude. It may also be used to ignite the fuze train for the main charge when it is spent. Gas pressures generated by these expulsion charges are on the same order of magnitude as gas generators. Figure 45 shows a smoke signal with the expulsion charge.

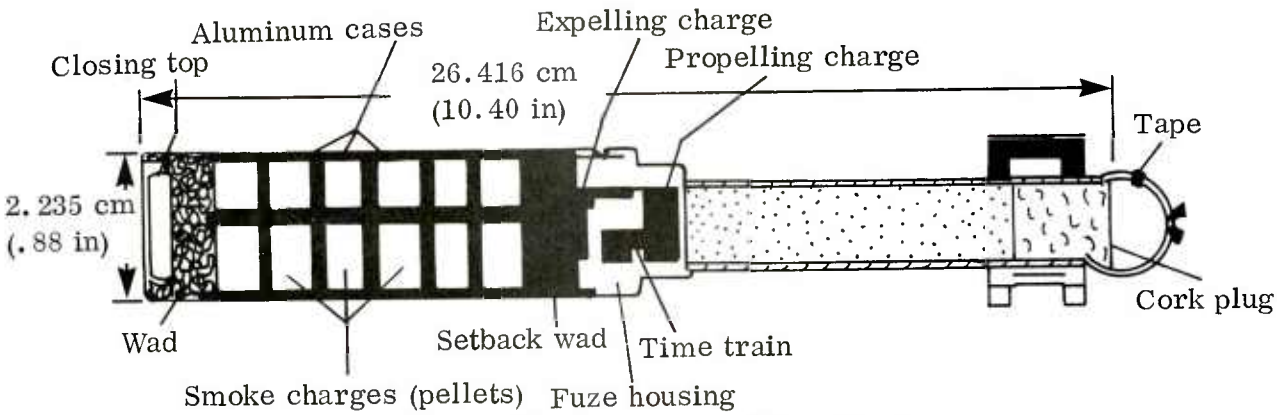

Figure 45. Rocket Expulsion Charge

Pure gas production is desirable because the generation (pyrotechnic mixture) is small and replaces a need for heavy and bulk storage batteries. Primary interest is providing a carrier for vaporized pure irritant mixture such as CS or CN. In actuality, these gas carriers are similar to colored smoke production in that the pyrotechnic mixture is a cool burning mixture that allows for volatilization and condensation of the irritant or incapacitating agent. A CN riot grenade is shown in figure 46.

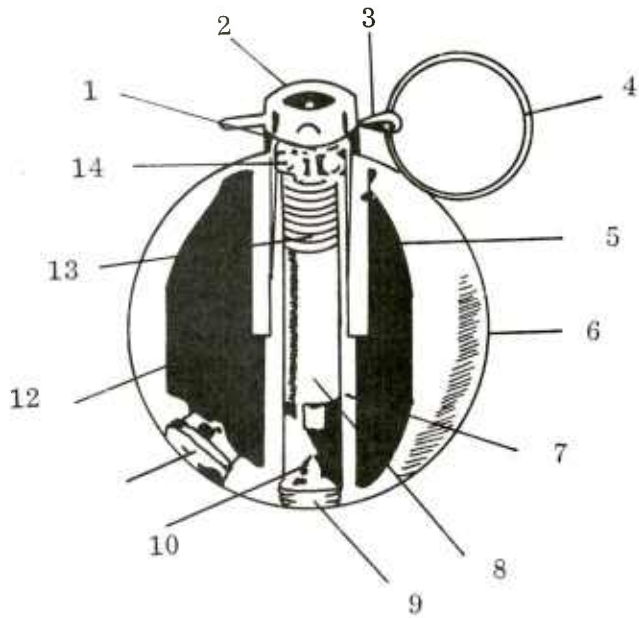

1 Arming spring
2 Arming sleeve
3 Safety pin
4 Safety pin ring
5 Upper half sleeve
6 Grenade body
7 Lower half-sleeve
8 Slider
9 Closure plug
10 Firing pin
11 Filling plug
12 CS pyrotechnic mixture
13 Firing spring
14 Safety balls

Figure 46. CN Riot Hand Grenade, M25A1

DATA DISCUSSION

Table 36 shows typical expulsion charge and gas-producing formulations. Table 37 is the summary of parametric stability and sensitivity data for these mixtures.

TABLE 36. TYPICAL GAS PRODUCING FORMULATIONS

	1	2	3	4	5
Potassium nitrate	67.2				
Sulfur	9.4				
Charcoal	14.2				
Calcium nitrate	9.2				
M9 propellant		71.8			
Black powder		7			
Nitrocel cement		14.2			
Potassium chlorate/boron (82.82/17.18)		7.0			
Magnesium carbonate			9	12	
Chemical agent CS			40	40	100
Lactose			18		
Potassium chlorate			30	27	
Nitrocellulose/acetone (8/92)			3	2	
Sugar				18	

Formula 1 is used as an expulsion charge for parachute flares and hand-held signals. Dillehay[26] performed an extensive investigation on the catastrophic failure of this composition in a hand-held rocket motor. He found that raw material manufacturing process changes resulted in a loss of physical strength of the propellant grain as the manufacturer was complying with new government regulations. This study also points out the design changes necessary to reduce the hazards, and the fact that, no matter how subtle they may seem, one needs to be aware of all changes in individual components of the mixture that may occur from time to time in manufacturing processes. One should also be aware of changes in regulations that may impact upon the manufacturing process.

Formula 2 is the M446 expulsion charge. This composition was tested primarily to determine why the end item in which this charge was loaded failed after a period of several years of storage. There had also been a change in the manufacturing process and packaging. The results of this study indicated that this mixture was more hygroscopic than it had originally been considered, and also that nitrocellulose migration could cause the failure. The new packaging technique would reduce the amount of moisture that could be absorbed under normal storage conditions.

TABLE 37. SUMMARY OF PARAMETRIC, STABILITY AND SENSITIVITY DATA FOR GAS PRODUCERS

		1	2	3	4	5
Autoignition temperature	°C	-	145	176	165	-
Decomposition temperature	°C	-	156	203	187	-
Density (bulk)	g/cm^3	1.69-1.76	1.63	0.97	0.88	-
Density (loading)	g/cm^3	1.82-1.89	1.63	1.41-1.44	1.14-1.4	1.14-1.4
Fuel/oxidizer ratio	x:1	-	-	0.83	0.49	-
Heat of combustion	cal/g	-	2462	3250	1070	-
Hygroscopicity		-	Fair	Good	Good	Good
Thermal stability		-	Poor	Good	Good	Good
Card gap		-	-	N.D.	N.D.	N.D.
Detonation test		-	-	N.D.	N.D.	N.D.
Electrical spark	Joules	-	> 50	0.5	1.25	0.5
Friction (steel shoe)		-	INSENS	INSENS	INSENS	INSENS
Ignition and unconfined burning			No Expl	No Expl	No Expl	No Expl
Impact sensitivity	inches	-	2.25	15	10	15
Burn time	sec/cm	-	1.11	6.89	0.79	2.56
TNT equivalency	%	-	-	34	2	12

Parametric data for this formula indicate that it is similar to smoke mixtures and that there are no significant variations in the measured values. Stability data show that this mixture is unstable in that hygroscopicity results are poor, thermal stability results are poor, and weight loss is fair as compared to other pyrotechnic mixtures.

Sensitivity of the expulsion charge indicates that it is insensitive to friction but highly sensitive to impact. Card gap tests and detonation tests were not conducted on this mixture.

Output data, other than burn time, were not obtained due to the limited quantity of test materials.

Formulas 3 and 4 are used to disseminate CS. Formula wise, they are similar except for the choice of fuel. Autoignition and decomposition are similar. Bulk density is slightly greater for formula 3 and the fuel/oxidizer ratio is also greater; this is due to the choice of fuel. Heat of combustion for formula 3 was three times higher than formula 4; again this is because of the fuel element.

Hygroscopicity, vacuum stability, and thermal stability data indicate that these mixtures are stable and not too hygroscopic.

These mixtures are insensitive to card gap, detonation, ignition and unconfined burning tests, and friction. They are sensitive to electrical spark and moderately sensitive to impact. The impact values compare with other pyrotechnic mixtures and non-initiating explosives.

There was a significant difference in burn time between formulas 3 and 4, with formula 4 being faster. TNT equivalency data for formula 3 was found to be 34%. The tests were conducted in a highly confined pipe bomb, and when tests were conducted in the Picatinny configuration, the TNT equivalency value was less than 2%. Also, formula 3 was tested for critical diameter and critical height. Again, it was not possible to obtain an explosive reaction in diameters up to 1 meter (3.28 ft) and heights to 130 cm (51 in). Based upon test results, the gas producers used to disseminate chemical agent CS have minimal explosive hazards.

Pure CS was tested in accordance with chapter 3 of Army Technical Bulletin 700-2, and the results, shown in formula 5, indicate that it is not an inert material since it will react when stimulated.

SUMMARY

A summary of data is shown in table 38. The results are incomplete, inconclusive, and are shown for reference only. There was minimal testing performed on mixtures in this group and data from other sources were lacking.

TABLE 38. SUMMARY OF GAS PRODUCING MIXTURES

		High Pressure	Pure Gas
Autoignition temperature	° C	145	171 ± 8
Decomposition temperature	° C	156	195 ± 11
Density (bulk)	g/cm^3	1.63	0.93 ± 0.06
Density (loading)	g/cm^3	1.63	1.41-1.44
Heat of combustion	cal/g	2462	2160 ± 1541
Hygroscopicity	95%	Fair	Good
Thermal stability		Poor	Good
Card gap		-	N.D.
Detonation test		-	N.D.
Electrical spark	joules	750	0.75 ± 0.43
Friction (steel shoe)		INSENS	INSENS
Ignition and unconfined burning		No Expl	No Expl
Impact sensitivity	inches	2.25	13 ± 3
Burn time	sec/cm	1.11	3.41
TNT equivalency	%	-	16 ± 16

SOUND

Noun	Type	Use
Simulators	Ground	Flash, whistling, report to train troops
	Airburst	Flash and report to simulate artillery during troop training

The production of sound pyrotechnically for military applications has been found to be highly cost effective in the training of troops for decoy or deception of the enemy and as warning and signaling devices. Stated another way, the production of sound is used very effectively for simulation of live ammunition which is more economically feasible than live ammunition for mimicing battle field sounds and flashes. Simulators are used to produce the effect of an event without duplicating it. Basically, there are two types of sounds produced by pyrotechnics: 1) a single burst and 2) a whistling sound. It is possible to produce both sounds in a single device.

The production of a blast or a simple load report is produced pyrotechnically by the use of mixtures which react or burn rapidly with a rapid expansion of gaseous and/or solid products in some form of confinement. Whistling effects are produced by the burning of certain mixtures in tubes. The whistle is produced by the decrepitation and subsequent intermittent burning of the composition.

Simulators used to mimic battlefield conditions and troop training fall into two categories: 1) airburst simulators and 2) ground burst simulators. Airburst simulators are used to simulate airbursts of artillery rounds. These devices explode at altitude and provide a flash of light, a puff of smoke, and are accompanied by a report. Usually they are fired from the ground with a pistol device and are delayed until they reach their functioning altitude. The light produced in these devices requires similar criteria as those for other types of illuminants but the intensity and duration are dependent upon the type of ammunition being simulated. A typical airburst simulator is shown in figure 47.

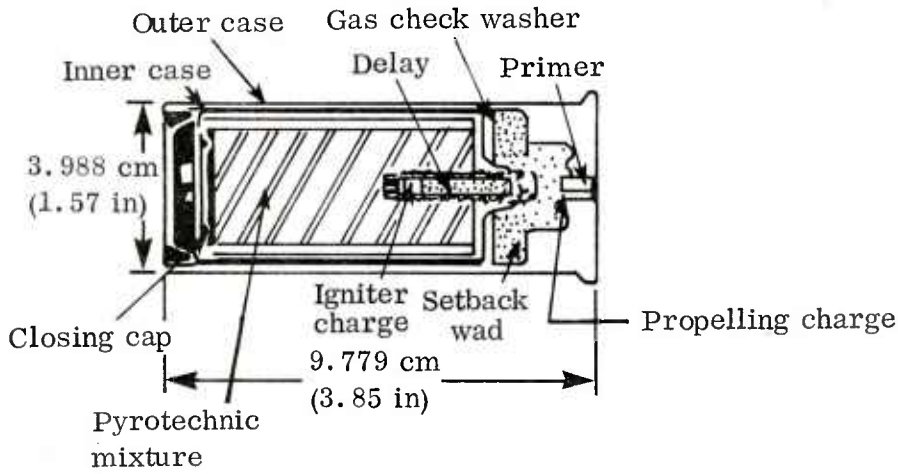

Figure 47. Projectile Airburst Simulator, M74A1

Ground burst simulators are similar to the airburst type except that some of these devices incorporate the whistling effect accompanied by a flash and report to simulate incoming artillery rounds. Other devices are a single flash and report or a whistling sound lasting for several seconds only. The simplest of these devices was the M80 firecracker shown in figure 48. These devices are no longer manufactured. A whistling booby trap simulator is shown in figure 49 and a projectile ground burst simulator is shown in figure 50.

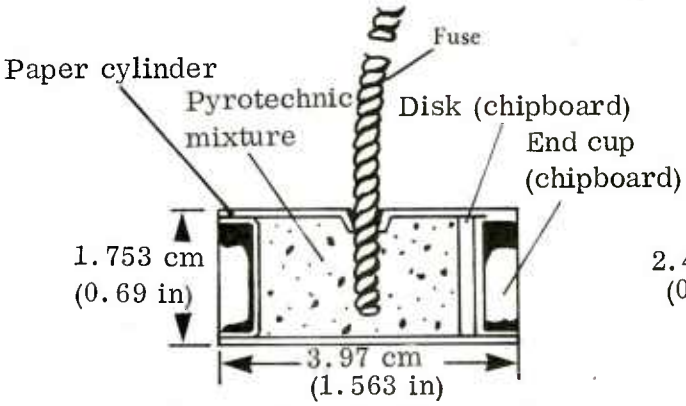

Figure 48. M80 Firecracker

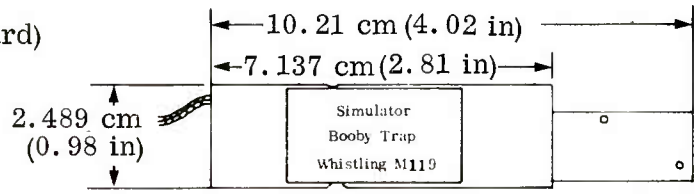

Figure 49. Whistling Booby Trap Simulator, M119

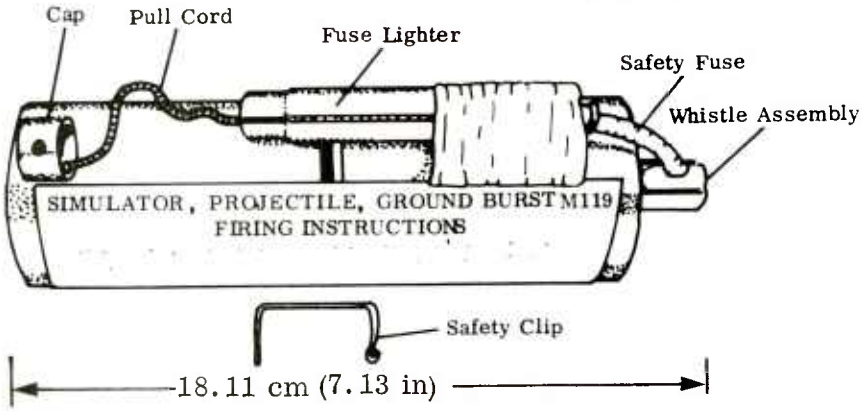

Figure 50. Projectile Ground Burst Simulator, M115

Sound simulation is used in other devices as decoys for blank enemy gun-fired cartridges and as warning and signal devices and salutes for military protocol. The importance of simulation by flash, smoke, and sound are not exact duplication but reproduction sufficient to realistically produce the effect that personnel can associate with the real conditions.

DATA DISCUSSION

Data sheets of individual mixtures are given in Appendix A. Table 39 gives the formulation for individual mixtures, and a summary of data is given in table 40.

Formula 1 is the mixture used in the M117 booby trap flash simulator, 2 is used in the M119 whistling booby trap simulator, 3 is the M110 gunflash simulator, 4 is the M115 projectile ground burst simulator which employes a whistling sound and report, 5 is the M74A1 airburst formulation - this mixture is also used as a photoflash, and

6 is the M80 firecracker mixture. The M80 firecracker mixture is no longer manufactured but is reported here along with the test data because of several catastrophic accidents that have occurred.

TABLE 39. TYPICAL SOUND PRODUCING FORMULATIONS

	1	2	3	4	5	6
Magnesium (Grade A, Type 1)	17		45	34		
Antimony sulfide (Grade 1, Class C)	33					3.5
Potassium perchlorate	50	73	35	40		64
Gallic acid		24				
Red gum		3				
Barium nitrate			15			
Barium oxalate			3			
Calcium oxalate			1			
Graphite			1			
Aluminum				26	9	22.5
Black powder					91	
Sulfur						10

The fuels used in these mixtures are magnesium, antimony sulfide, gallic acid, aluminum, and sulfur. The oxidizers used include potassium perchlorate, barium nitrate and oxalate, and calcium oxalate. Other ingredients used include black powder, graphite, and red gum. Basically these systems are typical tertiary mixtures of fuel/oxidizer additive and are oxygen rich.

The autoignition and decomposition temperatures range from a low of 300° C and 344° C to highs of 762° C and 810° C. These values are comparable to the photoflash mixtures and some other illuminant mixtures. These mixtures are loaded loosely, and only the bulk density value is reported. They are comparable with other mixtures. Gas volume for these mixtures are higher than other pyrotechnic mixtures. Values range from a low of 33 ml/g to a high of 178 ml/g. Heats of combustion are comparable with other groups of pyrotechnics but slightly less than photoflash mixtures. These values range from a low of 1828 cal/g to a high of 3641 cal/g. The heats of reaction are significantly lower than the photoflash mixtures.

Stability of these mixtures are quite good. Hygroscopic data at both 95% and 50% humidity levels indicate that these mixtures do not readily absorb moisture. This was

TABLE 40. SUMMARY OF PARAMETRIC, STABILITY AND SENSITIVITY DATA FOR SOUND PRODUCERS

		1	2	3	4	5	6
Autoignition temperature	°C	562	453	596	762	300	360
Decomposition temperature	°C	599	496	637	810	344	415
Density (bulk)	g/cm^3	1.16	0.96	1.21	1.3	1.09	1.16
Fuel/oxidizer ratio	x:1	1	0.33	0.82	1.5	-	0.48
Gas volume	ml/g	33	53	48	76	153	178
Heat of combustion	cal/g	3364	2310	3641	-	1828	2176
Heat of reaction	cal/g	1042	942	1040	-	851	790
Hygroscopicity	95%	Good	Good	Good	Good	Good	Good
Thermal stability	75° C	Good	Good	Good	Good	Good	Good
Vacuum stability	ml/gas/40 hr	0.18	0.18	0.11	0.22	0.3	0.23
Weight loss 50° C	%	0.13	0.76	0.09	0.001	0.042	0.0016
Card gap test results		N.D.	N.D.	N.D.	N.D.	N.D.	N.D.
Detonation test results		Burned	Burned	Burned	Mush.*	Mush.*	Mush.*
Electrical spark	Joules	1.125	0.625	0.825	0.725	0.225	0.1
Friction (steel shoe)		SENS	SENS	SENS	SENS	INSENS	C.D.+
Ignition and unconfined burning		No Expl	No Expl	No Expl	No Expl	No Expl	No Expl
Impact sensitivity	inches	3.75	3.75	10	10	3.75	10
Burn time	sec/cm	0.19	0.79	0.19	0.19	0.9	0.1
TNT equivalency	%	-	-	-	-	45	80

*Mushrooming is indication of detonation

+C.D. = Complete detonation

also evidenced in the weight loss test results where weight loss due to moisture of volatiles averaged less than 0.2 of 1%. However, vacuum stability data obtained indicates that these mixtures are unstable due to the fact that gases liberated over the 40-hour period exceeded 0.1 ml. Taylor[27] and others[28] have indicated that vacuum stability data for pyrotechnics might not be as meaningful as originally preceived.

These mixtures are sensitive to friction, impact, electrical spark, and detonation test results. They did not produce the classic hole in the card gap test configuration, but M80 mix did penetrate the witness plate. Ignition and unconfined burning test configurations produced the expected results in that only burning occurred when exposed to open flame, but the burning of these mixtures was more rapid. Based upon the sensitivity of these mixtures, extreme care and prudent safety practices should be exercised in their manufacture and handling.

The burn time data indicate that these mixtures burn rapidly, hence definition of the production of sound pyrotechnically was expected. The burn times reported for these mixtures are comparable to the photoflash mixtures reported previously. The average burn time was less than 400 milliseconds. Only two of the six materials under went TNT equivalency testing and they both were quite reactive. The M74A1 mixture has a

TNT equivalency value of approximately 45%, and the M80 firecracker mixture had an equivalency of approximately 80%. These values are exceptionally high for pyrotechnic formulations. The M80 values were obtained in three different configurations that included bullet impact, detonation test "A" and "B", and external heat test C, which was in the packaging configuration normally used for shipments.

SUMMARY

The average values for parametric stability and sensitivity data are given in table 41. The parametric values vary with each type of simulator device. Stability data indicates that these mixtures are more stable than indicated by the vacuum stability data and are comparable to smokes and gas producers for stability. However, these mixtures are much

TABLE 41. SUMMARY OF SOUND PRODUCERS

Autoignition temperature	° C	506 ± 169
Decomposition temperature	° C	550 ± 168
Density (bulk)	g/cm^3	0.98 ± 0.42
Fuel/oxidizer ratio	x:1	0.8 ± 0.46
Gas volume	ml/g	85 ± 67
Heat of combustion	cal/g	2666 ± 789
Heat of reaction	cal/g	933 ± 112
Hygroscopicity	95%	Good
Thermal stability	75° C	Good
Vacuum stability	ml/gas/40 hr	0.2 ± 0.07
Weight loss	50° C %	0.17 ± 0.29
Card gap test results		No Detonation
Detonation test results		Detonation (mushrooming)
Friction (steel shoe)		Sensitive
Electrical spark sensitivity	Joules	
Ignition and unconfined burning		No Explosion (rapid burning)
Impact sensitivity	inches	7 ± 3
Burn time	sec/cm	0.39 ± 0.35
TNT equivalency	%	63 ± 25

more sensitive than any other group of pyrotechnic mixtures and extreme care should be exercised in manufacturing and handling. The sensitivity of the mixtures is one to two orders of magnitude less than other pyrotechnic groups.

The output characteristics of these mixtures, by definition, are more reactive than smokes, heat producers, or illuminants. This is noted by the rapid burn time and the TNT equivalency values obtained on these mixtures.

HEAT

Noun	Type	Use
Heat	First fires	Produce a high temperature flame and hot slag to ignite an underlying pyrotechnic charge.
	Fuel mixtures	Used to disseminate a vaporized compound such as an irritant.
	Ignition mixtures	Prime ignition source providing fire transfer to intermediate charges. First increment in pyro fuze train.
	Incendiaries	A highly exothermic mixture or material used primarily to start fires.
	Starter mixtures	Intermediate mixture that primarily transmits flame from an initiating device to a less readily ignitable mixture.

Heat producers are those mixtures that pyrochemically produce heat after initiation and are used exclusively for heat transfer. This group of pyrotechnics are the building block for pyrotechnic fuze trains and are categorized as ignition mixtures, first fires, and starter mixtures. Other types of heat producers are those mixtures that raise the temperature of other materials causing them to vaporize and condense. These materials include fuel mixtures which are used to ignite combustibles such as incendiaries.

To be a successful priming mixture, ignition mixtures, first fires, and starter mixtures should have a low ignition temperature and be easily ignitable by a spark or flash from some initiating device. Once ignited, these mixtures should not burn violently enough to produce a hot slag that transfers the heat to the main mixture. These mixtures should produce a minimum amount of gas.

Specific functions of each of these mixtures are to provide fire transfer to the main item which can be an integral part of the system of a flame, smoke, candle, etc., which are formulated and adapted to the item. Delay column or time functions fall into this category as well, and in some instances, are referred to as first fire mixtures in the fuze train rather than delay powder. Treatment of delay systems are given in a separate chapter.

Ignition mixtures are used as the first increment in a pyrotechnic fuze train, which provides the primary ignition source for the intermediate charge. A typical pyrofuze train showing the basic elements is shown in figure 51. These mixtures have a relatively

low to moderate ignition temperature and provide a flame as their output. They liberate a moderate amount of gas when burning, and the caloric output (cal/g) of these mixtures is in the intermediate range.

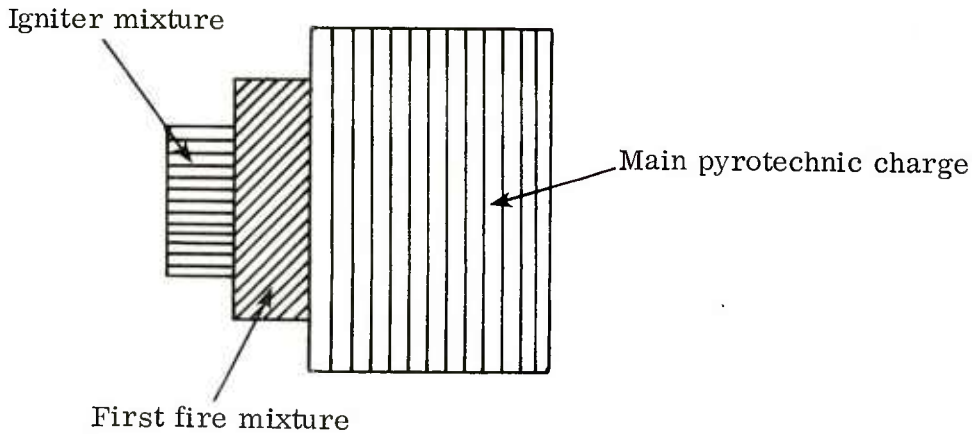

Figure 51. Typical Pyrotechnic Fuze Train

First fire mixtures are those primary heat transfer mixtures that are in intimate contact with the main pyrotechnic mixture to provide fire transfer by flame and hot slag particles. The first fire item is usually "painted or buttered" on to the main charge. Generally first fire mixtures are considered to be the most sensitive element in the fuze train. For this reason, only a small quantity is used. By applying the first fire mixture to the main charge while it is wet reduces the hazards potential during handling. First fire mixtures containing titanium and zirconium are considered to be the most sensitive; whereas, those containing magnesium and boron can be considered as intermediate in sensitivity. Those mixtures containing silcon, calcium silicide, antimony and aluminum are the least sensitive of all of the first fire mixtures. In some fuze trains first fire mixtures are used as delay elements. This is particularly true for the boron first fire mixtures.

Starter mixtures are used in the same sense as a first fire mixtures. It is the intermediate charge in the fuze train that is in intimate contact with the main charge. Some authors have listed these two types of mixtures synonomously. However, for the sake of clarity, specific drawing numbers for starter mixtures, as shown on data sheets in Appendix A, clearly delineate a difference in the two types of mixtures. The fuels and oxidizers in this group of formulas are silicon, calcium silicide, and aluminum, which would be considered the least sensitive type of first fire mixtures. The output, such as flame and hot slag, from the starter mixtures would be the same as first fires.

Fuel mixtures are used to elevate the temperature of other solids causing them to vaporize and condense by disseminating irritants and incapacitating agents. These mixtures are similar to the smoke mixtures used to vaporize the dye and disseminate a smoke cloud. These mixtures which burn with a minimum amount of flame are relatively cool in burning. The cool burning is necessary in order to prevent decomposition of the dye or irritant.

Incendiary mixtures, as discussed here, are limited to those mixtures which are of the classic fuel oxidizer type. These mixtures are used primarily to ignite combustible

materials. There are three basic types and they can be classified according to their use. First, there is small arms incendiary ammunition that is used primarily against aircraft and fuel dumps. Another type includes those munitions such as bombs, grenades, mortars, and artillery projectiles which are used primarily to initiate fires in buildings and ammunition dumps. Finally, are those specific incendiary devices which are used in the destruction of materials and documents.

Small arms incendiary ammunition are as much as 40 mm in size. These items are used primarily for destructive type fires in aircraft fuel tanks. The target effect depends upon the amount of energy transferred to the fuel. Most aircraft type fuels have a low ignition temperature and usually are in enclosed fuel cells, so the heat transfer has to be self-sustaining, which means it contains its own oxygen to cause the reaction. A typical small arms incendiary device is shown in figure 52. These mixes are also loaded in armor-piercing and high explosive incendiary devices.

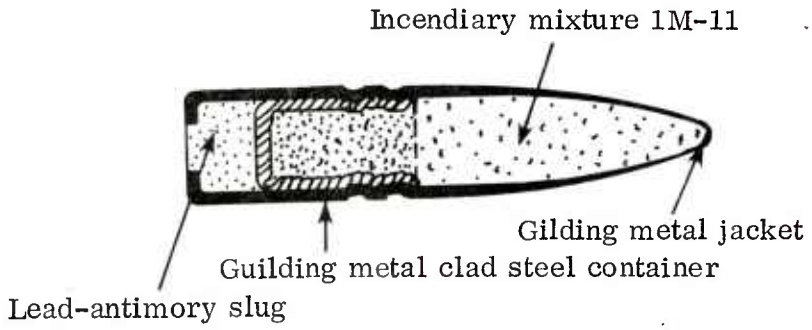

Figure 52. Typical Cal 0.50 Incendiary Bullet

Incendiary items for ground application are those mixtures used extensively for the combustion of buildings and ammunition dumps. The amount of energy from these mixtures serves only to initiate combustion of targets in air. All of these items, with the exception of pyrotechnic devices, must contain air initiation. These mixtures do not necessarily contain their own oxygen.

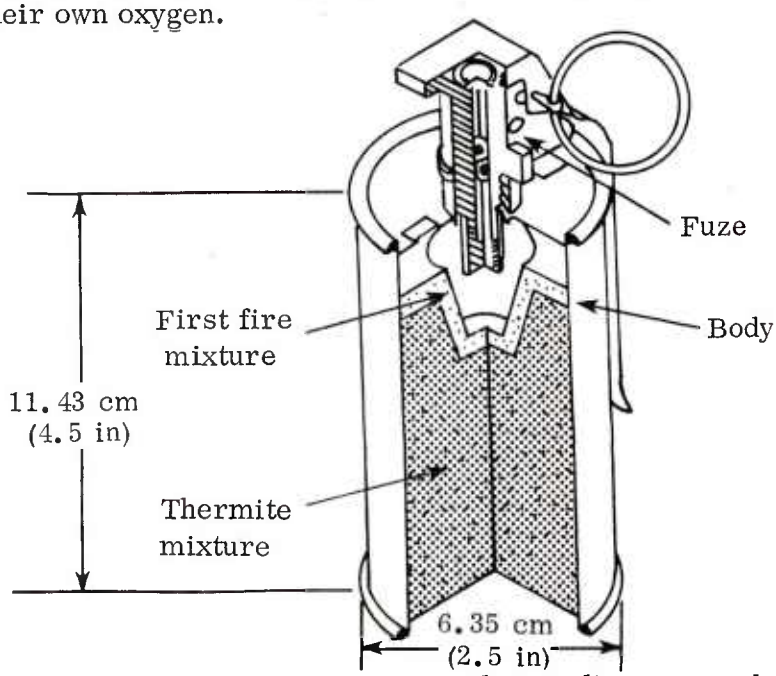

Figure 53. Typical Incendiary Grenade

Special incendiary devices are used as document destroyers and for the destruction of various materials. They may be used for destroying electronic equipment. A typical incendiary grenade is shown in figure 53. These devices use primary thermate and thermite type mixtures.

DATA DISCUSSION

Data sheets for heat producing devices are given in Appendix A.

First Fire Mixtures

Table 42 shows some typical first fire mixtures. A summary of parametric, stability, and sensitivity data is given in table 43. Of the many possible mixtures, this agency has only tested the above mentioned four. These mixtures are used primarily in the M18 and ANM8 grenades as the intermediate charge. Formula 4 is significantly different in chemical composition from the other three mixtures.

TABLE 42. TYPICAL FIRST FIRE MIXTURE FORMULATIONS

	1 FF VII	2 FF30	3 FF31	4 (PY101LY)	5 FFVI	6 FF30
Red lead	25	50	25		55	70
Titanium	25	25	25		12	30
Iron oxide (black)	25					
Silicon	25	25	25	20	33	
Barium nitrate				50		
Zirconium hydride				15		
TNC				10		
Laminac				5		
Iron oxide red			25			
Binder					8-10	

Parametric values for formulation 4 are significantly different from values obtained in formulas 1, 2, and 3. Autoignition and decomposition temperature for number 4 is approximately 300° C less than the silicon/red lead formulas. Stability of the silicon/barium nitrate/zirconium hydride mixture is not as good as the silicon/red lead mixtures. The PY101LY formula is sensitive to friction but less sensitive to electrical spark than the other mixtures by almost an order of magnitude. Impact sensitivity values are the same for all samples. The significant difference between all of these mixtures is in the output or the potential energy release when compared to TNT. The first three samples of the red lead/silicon type show a zero equivalency value. However, tests conducted by ITTRI[17] for Picatinny Arsenal Pyrotechnic Branch indicated that a pressure release

equivalency to 30% was obtainable under certain conditions. Such values warrant additional safety considerations when using this mixture.

TABLE 43. SUMMARY OF PARAMETRIC, STABILITY AND SENSITIVITY DATA FOR FIRST FIRE MIXTURES

		1 (FF VII)	2 (FF30)	3 (FF31)	4 (PY101LY)	5 (FFVI)	6 (FF30)
Autoignition temperature	° C	762	780	865	476	777	659
Decomposition temperature	° C	821	896	997	550	856	710
Density (bulk)	g/cm^3	1.33	2.33	1.42	0.96	2.36	2.26
Fuel/oxidizer ratio	x:1	1	1	1	0.7	0.82	0.42
Gas volume	ml/g	11	14	22	55	15	-
Heat of combustion	cal/g	810	880	1020	-	825	-
Heat of reaction	cal/g	360	225	343	-	290	-
Hygroscopicity		Good	Good	Good	Good	Good	Good
Thermal stability		Good	Good	Good	Good	Good	Good
Vacuum stability	ml/gas/40 hr	0.08	0.06	0.09	0.39	0.063	-
Weight loss	%	0.06	0.042	0.09	0.06	0.04	0.06
Card gap test		N.D.	N.D.	N.D.	N.D.	N.D.	N.D.
Detonation test		C.B.	C.B.	C.B.	C.B.	C.B.	C.B.
Electrical spark	Joules	0.875	1.625	1.125	9.76	1.625	-
Friction (steel shoe)		INSENS	INSENS	INSENS	SENS	INSENS	SENS
Ignition and unconfined burning		No Expl	No Expl	No Expl	No Expl	No Expl	No Expl
Impact sensitivity	inches	15	15	15	15	15	10
Burn time	Sec/cm	1.13	1.13	1.57	3.94	1.57	2.55
TNT equivalency	%	0	0	0	30	-	-

Fuel Mixtures

Typical fuel mixtures are shown in table 44. Formula 1 is used as the primary heating source for the dissemination of CS chemical agent. Formula 2 is used in the M6 smoke pot and formula 3 is used in the AN-M7A1 floating smoke. Parametric, stability, and sensitivity data for these mixtures are shown in table 45.

Autoignition and decomposition temperatures range from lows of 176° C and 193° C to highs of 214° C and 231° C respectively. These mixtures have the lowest ignition temperatures of all of the heat producer mixtures. Mixtures which use potassium chlorate or nitrate have lower decomposition temperatures than other types of mixtures. The sugar also has a low ignition point as well. The densities of the mixtures are all less than 1. These mixtures are gaseous liberating on an average of 47 ml/g. These values

are the highest of the heat producers. Heats of combustion and heats of reaction are in the mid range for heat producers with average values of 1186 cal/g and 458 cal/g respectively.

TABLE 44. TYPICAL FUEL MIXTURE FORMULATIONS

	1	2	3
Potassium chlorate	42		
Sugar	28		
Magnesium carbonate	30		
Nitrocellulose/acetone 8/92	44		
Ammonium nitrate		74	85
Charcoal		16	
Potassium nitrate		8	
Fuel oil		2	
C-rubber			12
Carbon black			2
Ammonium dichromate			1

The hygroscopicity, thermal stability, and weight loss values indicate that these mixtures are stable and do not readily absorb moisture. The vacuum stability data average was 0.12 ml/gas/liberated in a 40-hour period. This is above the acceptable unit for a stable compound.

None of these mixtures exhibited characteristics of a detonation in the card gap configurations. There were no detonations or burning as the results of the detonation tests. These mixes were insensitive to friction and there were no explosions in the ignition and unconfined burning configuration. All of these fuel mixtures are sensitive to electrical spark, more so than all of the other heat producers by an order of magnitude. Impact sensitivity for each of these mixtures are the same, 25.4 cm (10 in), which is more sensitive than the rest of the heat producers since an impact sensitivity drop height of 25.4 cm (10 in) is sufficient to classify a mixture as a DoD Class 1.1. However, these values are in good agreement with other pyrotechnic mixtures.

Burn time (sec/cm) values range from a low of 1.38 sec/cm to a high of 0.79 sec/cm. These mixtures burn the fastest of all of the heat producers but are of the same order of magnitude. Formula 1 was tested for TNT equivalency, and at 14%, it does not constitute a great explosive hazard, even though this value is above the accepted 10% value for a DoD Class 1.3 mixture.

TABLE 45. SUMMARY OF PARAMETRIC, STABILITY AND SENSITIVITY DATA FOR TYPICAL FUEL MIXTURES

		1	2	3
Autoignition temperature	° C	176	206	214
Decomposition temperature	° C	193	223	231
Density (bulk)	g/cm^3	0.88	0.86	0.9
Fuel oxidizer ratio	x:1	1.5	0.22	0.16
Gas volume	ml/g	53	51	38
Heat of combustion	cal/g	1000	1146	1412
Heat of reaction	cal/g	365	406	602
Hygroscopicity	95%	Good	Good	Good
Thermal stability	75° C	Good	Good	Good
Vacuum stability	ml/gas/40 hr	0.11	0.12	0.14
Weight loss	%	0.66	0.07	0.07
Card gap test		N.D.	N.D.	N.D.
Detonation test		N.D.	N.D.	N.D.
Electrical spark	Joules	0.002	0.25	1.125
Friction (steel shoe)		INSENS	INSENS	INSENS
Ignition and unconfined burning		No Expl	No Expl	No Expl
Impact sensitivity	inches	10	10	10
Burn time	sec/cm	0.79	1.18	1.38
TNT equivalency	%	14	-	-

Ignition Mixtures

Typical ignition mixture formulas are given in table 46 and parametric, stability, and sensitivity data are given in table 47. The ingredients used in these mixtures are similar to other ignition and first fire mixtures.

Autoignition and decomposition temperatures for these mixtures are in the mid-range of the heat producer mixtures. The values for autoignition range from a low of 280° C to a high of 456° C and the range of decomposition temperatures is 321° C to 602° C. These mixes are more difficult to ignite than fuel mixtures and starter mixtures but less difficult than first fire mixtures. Gas volume for these mixtures is less than the fuel but greater than the first fire and starter mixtures. These mixtures are considered to be gaseous. The caloric output of ignition mixtures is higher than the first fire and fuel mixtures but less than the starter mixtures.

TABLE 46. TYPICAL IGNITION MIXTURE FORMULATIONS

	1	2	3	4	5
Sodium nitrate	47				
Sugar	47				
Charcoal	6				
Iron oxide		50		25	
Titanium		32.5			
Zirconium		17.5		65	
Nitrocellulose/acetone (8/92)		44			
Boron			25		
Lead dioxide					33.3
Potassium nitrate			75		
Cupric oxide					33.3
VAAR			1		
Superfloss* silicon				10	33.3

*Tradename for finely ground and calcined diatomaceous earth

Hygroscopicity of formula 1 is fair. For the remainder of the mixture, hygroscopicity is good. Overall these are relatively stable.

Igniter mixtures are insensitive to the card gap and ignition and unconfined burning results. Igniter III and SI-193 burned in the detonation test configuration, and SI-193 is sensitive to friction. Of all of the heat producer mixtures, these mixtures are the least sensitive to electrical spark initiation. Mixtures 1 and 2 were insensitive to impact but SI-193 was very sensitive to impact. Generally, SI-193 was more sensitive to all of the various stimuli and care should be exercised in handling this particular mixture.

Burn times varied from a slow of 15 sec/cm to a rapid burn time of 0.79 sec/cm. TNT equivalency of the SI-193 mixture was 32%, which is relatively high for a pyrotechnic mixture, and is indicative of moderate explosive hazard when compared with other types of pyrotechnic mixtures.

TABLE 47. SUMMARY OF PARAMETRIC, STABILITY AND SENSITIVITY DATA FOR IGNITION MIXTURES

		1	2	3	4	5
Autoignition temperature	° C	280	456	419	427	401
Decomposition temperature	° C	321	492	602	496	440
Density (bulk)	g/cm^3	0.75	1.3	0.87	1.48	1.17
Fuel oxidizer ratio	x:1	1.13	1	0.34	2.6	0.5
Gas volume	ml/g	26	-	44	25	5-10
Heat of combustion	cal/g	2014	1176	1594	550	344
Heat of reaction	cal/g	940	630	1524	-	-
Hygroscopicity	95%	Fair	Good	Good	Good	Good
Thermal stability 48 hr @	75° C	Good	Good	Good	Good	Good
Vacuum stability	ml/gas/40 hr	0.1	0.09	0.16	0.018	-
Weight loss 18" var 48 hr @	50° C	0.19	0.053	0.76	0.96	0.83
Card gap test results		N.D.	N.D.	N.D.	N.D.	N.D.
Detonation test results		N.D.	C.B.	C.B.	C.B.	N.D.
Electrical spark	Joules	8	2.5	0.124	0.005	0.05
Friction (steel shoe)		N.R.	N.R.	SNAPS	C.B.	N.R.
Ignition and unconfined burning		No Expl	No Expl	No Expl	No Expl	No Expl
Impact sensitivity	inches	15	15	3.75	3.75	10
Burn time (bulk)	sec/cm	-	0.79	0.9	0.16	-
TNT equivalency	%	-	-	32	-	-

Starter Mixtures

Typical starter mixture formulations are given in table 48. Parametric stability, sensitivity and output data are given in table 49. These mixtures use ingredients similar to other heat producers. Several of these mixtures have the same ingredients except that in one case they are mixed dry and in the other situation are wet-blended in a nitrocellulose/acetone binder. Finally, formula 9 was to be a new and improved starter mixture known as a plastic bonded starter mixture. It was mixed in a helicon blender, extruded into cylindrical shape, and allowed to cure. Then it was sliced into a wafer and placed on top of the smoke mix in an M18 smoke grenade. Pankow[29] conducted the initial classification tests and the results were encouraging; but, the concept was abandoned later as being impractical. The results of the classification tests, however, do not warrant scrapping this method since the starter mixture formula it would have replaced is more sensitive.

Autoignition and decomposition temperatures are higher than fuel mixtures but lower than either first fire or ignition mixtures. Autoignition values range from a low of 150° C for the plastic bonded starter mixture to a high of 501° C for SM III. Decomposition temperatures ranged from a low of 172° C to a high of 541° C. Gas volume for all of these

TABLE 48. TYPICAL STARTER MIXTURE FORMULATIONS

	1	2	3	4	5	6	7	8	9	10
Potassium perchlorate	30									
Calcium silicide	35									
Antimony sulfide	35									
Nitrocellulose/acetone (8/92)	66									
Silicon		26		40				26		50
Potassium nitrate		35	70.5	54			70.5	35		
Charcoal		4	29.5	6			29.5	4		
Iron oxide black		22						22		
Aluminum		13						13		
Nitrocellulose/acetone (4/96)				3		40	50	16.7		
Potassium chlorate					43.2	43.2			39	
Sulfur					16.8	16.8				
Sodium bicarbonate					30	3				
Corn starch					10	10			9	
Aera-Wax-C-Filler									3	
Santicizer-plasticizer									5	
NCT 845 Polymercapton Crosslinker									20	
XD 2679 Resin									20	
Cupric oxide										30
Lead dioxide										20

mixtures averaged 28 ml/g which makes them moderately gaseous and in the mid-range value for heat producer mixtures. These starter mixtures are almost always used in vertical systems. The caloric output (heat of combustion) was found to be the greatest for this group of pyrotechnic mixtures. The caloric output was approximately 1000 cal/g greater than any of the other heat producer mixtures.

The hygroscopicity of the starter mixture is considered good. Generally they absorbed less than 3% moisture at the 95% humidity level. There was no weight loss or change in configuration in the the thermal stability tests. Weight loss at 50° C was less than 1.2%. These mixtures are considered to be stable.

The starter mixtures are insensitive to card gap, ignition and unconfined burning, and friction test results. All of the mixtures tested burned in the detonation test configuration but there was no mushrooming of the lead cylinder. Electrical spark sensitivity of these mixtures is greater than first fires and ignition mixtures but are less sensitive than igniter mixtures. Generally, starter mixtures were insensitive to impact, with the average value of 33 cm (13 in), with the exception of formula 6 which was sensitive, reacting at 9.5 cm (3.75 in). A difference in impact sensitivity due to the addition of a binder can be inferred here as formula 6 is the same as 5 except for the method blended, with the binder being added to formula number 6. The net result is a change in the order of magnitude in impact sensitivity. This great degree of difference is not detectable in friction or electrical spark results.

TABLE 49. SUMMARY OF PARAMETRIC, STABILITY AND SENSITIVITY DATA FOR STARTER MIXTURES

		1	2	3	4	5	6	7	8	9	10
Autoignition temperature	°C	446	421	418	501	216	401	401	401	150	476
Decomposition temperature	°C	516	487	466	541	246	446	456	462	172	500
Density (bulk)	g/cm^3	2.28	1.22	0.86	1.24	1.06	1.33	1.04	1.14	1.25	1.18
Fuel/oxidizer ratio	x:1	0.54	0.75	0.42	0.91	0.62	0.62	0.42	0.75	1	1
Gas volume	ml/g	12	16	43	14	22	33	45	17	48	3
Heat of combustion	cal/g	3636	2690	2100	2116	2180	2180	2210	2605	5540	380
Heat of reaction	cal/g	1812	486	980	980	942	946	965	1102	1865	-
Hygroscopicity	95%	Good	Good	Good	Good	Good	Good	Good	Good	Good	Good
Thermal stability	75° C	Good	Good	Good	Good	Good	Good	Good	Good	Good	Good
Vacuum stability	ml/gas/40 hr	0.11	0.07	0.1	0.08	0.1	0.1	0.1	0.09	0.23	0.09
Weight loss	@ 50° C %	1.02	1.13	0.98	0.077	1.02	0.98	0.98	0.96	0.014	0.043
Card gap results		N.D.	N.D.	N.D.	N.D.	N.D.	N.D.	N.D.	N.D.	N.D.	N.D.
Detonation test results		C.B.	C.B.	C.B.	C.B.	No Burn	C.B.	C.B.	C.B.	C.B.	C.B.
Electrical spark	Joules	-	1.5	0.75	0.75	1.15	1.125	0.75	1.25	-	-
Friction (steel shoe)		INSENS	INSENS	INSENS	INSENS	INSENS	INSENS	INSENS	INSENS	INSENS	-
Ignition and unconfined burning		No Expl	No Expl	No Expl	No Expl	No Expl	No Expl	No Expl	No Expl	No Expl	No Expl
Impact sensitivity	inches	15	15	10	15	15	3.75	15	15	15	15
Burn time	sec/cm	5.12	1.97	3.84	0.59	9.84	2.36	0.18	0.9	2.76	-
TNT equivalency	%	-	-	16	-	-	20	5.5	-	8	-

Burn time values varied from 9.84 sec/cm to 0.9 sec/cm. It can be noted that when the addition of a binder was the only difference between formulas 5 and 6, the one with the binder, or wet-blended, had a more rapid burn rate. This trend is also noted in formulas 3 and 7 as the latter was wet-blended in nitrocellulose/acetone; whereas number 3 was not. Formula 7 burns much more rapidly. TNT equivalency values obtained ranged from a low 5.5% to a high of 20%. These mixtures have a moderate explosive hazards potential.

SUMMARY

A comparison of summaries of results for each group of heat producing mixtures is given in table 50. Autoignition and decomposition temperatures are the lowest for the ignition mixes and the highest for first fire mixtures. This is indicative of their order in a fuze train. Of primary importance is in the transfer of fire and hot slag particles to the main charge. These mixtures range from being moderately gaseous for the first fire and starter mixtures to more gaseous for the fuel and igniter mixtures. The fuel mixture produces the most gas. The caloric output ranges from a low of 903 cal/g for first fire mixtures to a high of 2806 cal/g for starter mixtures. The average caloric output for heat producer mixtures is 2017 cal/g, and this value is slightly lower than any of the other groupings with the exception of delay mixtures. The important considerations with these mixtures are easy starting (ignition mixture) and good fire transfer with slag retention (first fires and starter mixture) to the main charge.

With the exception of several mixtures, stability as measured by hygroscopicity, thermal stability, and weight loss indicate that heat producing mixtures, as a whole, are quite stable and relatively non-hygroscopic.

TABLE 50. COMPARISON OF RESULTS FOR HEAT PRODUCERS

		First fire mixtures	Fuel mixtures	Ignition mixtures	Starter mixtures
Autoignition temperature	° C	720 ± 136	199 ± 20	385 ± 93	373 ± 113
Decomposition temperature	° C	805 ± 156	216 ± 20	472 ± 142	421 ± 125
Density (bulk)	g/cm^3	1.78 ± 0.61	0.88 ± 0.02	0.97 ± 0.29	1.27 ± 0.4
Fuel/oxidizer ratio	x:1	0.82 ± 0.23	0.63 ± 0.76	0.82 ± 0.42	0.67 ± 0.2
Gas volume	ml/g	23 ± 18	47 ± 8	35 ± 13	28 ± 15
Heat of combustion	cal/g	883 ± 96	1186 ± 209	1595 ± 419	2806 ± 1136
Heat of reaction	cal/g	254 ± 157	458 ± 127	1031 ± 454	1120 ± 442
Hygroscopicity	95%	Good	Good	Fair to Good	Good
Thermal stability	75° C	Good	Good	Good	Good
Vacuum stability	ml/gas/40 hr	0.14 ± 0.14	0.12 ± 0.015	0.12 ± 0.04	0.109 ± 0.05
Weight loss	@ 50° C %	0.06 ± 0.02	0.27 ± 0.34	0.33 ± 0.37	0.8 ± 0.43
Card gap test		N.D.	N.D.	N.D.	N.D.
Detonation test		C.B.	N.D.	C.B.	C.B.
Electrical spark	Joules	3 ± 3.79	0.459 ± 0.59	3.54 ± 4.04	1.04 ± 0.3
Friction (steel shoe)		INSENS	INSENS	SENS	INSENS
Ignition and unconfined burning		No Expl	No Expl	No Expl	No Expl
Impact sensitivity	inches	1.4 ± 2.2	10	11.25 ± 6.5	13 ± 4
Burn time	sec/cm	1.98 ± 1.09	1.12 ± 0.3	5.6 ± 8	2.08 ± 1.63
TNT equivalency	%	30	14	32	12.4 ± 6.8

None of the heat producing mixtures detonated as the result of the card gap test, however, a majority of these mixtures burned as a result of the detonation test. Those results are comparable with all other pyrotechnic mixtures with the exception of initiating mixtures. Only certain types of illuminant mixtures showed evidence of mushrooming the lead cylinder. Otherwise, when a pyrotechnic mixture reacted to the detonation test, burning was the result. These mixtures are insensitive to friction with the exceptions of PY101LY which is a first fire, and PA SI-193 which is a special ignition mixture. These two mixtures were also found to be more sensitive to other stimuli and are the exception rather than the rule. Electrical spark sensitivity for heat producing mixtures, as a whole, are more sensitive than other mixtures. The exceptions being initiator mixtures and sound producing mixtures. Fuel mixtures are the most sensitive and ignition mixtures are the least sensitive. As expected, ignition and unconfined burning results produced a burning effect. In none of the pyrotechnic mixtures tested have the results produced any different response. Usually the burning time is greater than 1 sec/cm and this is a relatively slow reaction when comparing the result with propellants and /or

explosives. In some cases, certain explosives and propellant compositions also burn in this configuration. The validity of the test method is somewhat questionable. Impact sensitivity of these mixtures compare favorably with some high explosions and propellants in that on an average the 2 kg mass drop height is 33 cm (13 in). These mixtures then are relatively insensitive to impact, with the exception noted when discussing starter mixtures and the effect of the binder.

Burn time values ranged from 1.12 sec/cm for fuel mixtures to 5.6 sec/cm for ignition mixtures. The average burn time for all heat producing mixtures listed is 2.91 sec/cm. This is approximately mid-range of all pyrotechnic mixtures and indicates nothing significant in comparison. Generally, TNT equivalency for all of the heat-producing mixtures exceeds 10%. In particular, PY101LY formulation, which is a first fire, and PA SI-193, a special igniter charge, exceed 30% TNT equivalency value; whereas, the fuel and starter mixtures range on an average of about 12%. The values for the starter and fuel mixtures are more in the range expected for a pyrotechnic mixture. The values for the PY101LY first fire and PA SI-193 igniter mixtures compare with some of the illuminants such as white flares and photoflash mixtures. In the case of the first fire mixtures, it contains a zirconium hydride with barium nitrate as the oxidizer, and the value obtained compares with other heavy metal hydrides such as the titanium/potassium perchlorate system (electric primer mixture), which has an equally high TNT equivalency value. In the case of the PA SI-193 mixture, it is formulated from boron and potassium nitrate and has an uncommonly high TNT equivalency value since most boron/oxidizer systems have values less than 5%.

TIME

Noun	Type	Use
Delay	Gaseous	Vented to atmosphere used in low altitude applications only.
	Gasless	Nonvented (obturated) use in items at all altitudes or having little free space in which to vent

In the functioning of all hazardous materials, it may be desirable to control the time between initiation and functioning of the main charge. Pyrotechnically, this is accomplished by a mixture that burns at a controlled rate for a given period of time (1/100 to 40 sec per linear inch). The mixture is usually consolidated into a given column of a given dimension at relatively high loading pressures and adjusted for correct burn time by removing the excess material. Figure 54 shows the relationship of the delay element in a simple fuze train.

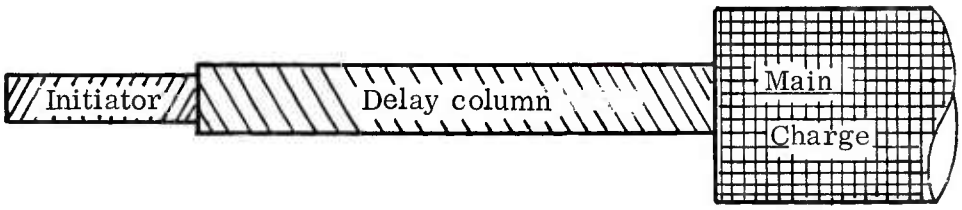

Figure 54. Relationship of Delay Element in a Simple Fuze Train

There are two basic types of delay elements: 1) gaseous, where the combustion products produce large quantities of gas that must be vented freely to the atmosphere, and 2) gasless, where the combustion produces little, if any, gas and requires little or no venting. Vented columns are used primarily in systems that function at low altitudes and space is not a governing factor in the design or use of the end item. Obturated columns (nonvented) are used in items that will function at both low and high altitudes and in items where space is minimal. In obturated columns some venting may occur.

Vented delay columns have openings at both ends to permit the escape of gases. They may be necessary for gasless delay mixtures when long delay times are required. Venting exposes the burning delay mixtures to atmosphere, consequently the burning rate is sensitive to changes in altitude. Sealing is required up to the time of functioning to protect the mixture from the elements; but upon function, it must be free to vent in both directions. Figure 55 shows a vented delay column.

An obturated delay element (figure 56) is constructed to contain all of the combustion products produced by the functioning of the initiator and the delay mixtures. Being obturated, the delay mixture is sealed from atmospheric influences and the gas that is generated tends to increase the pressure buildup and increases the average burning rate.

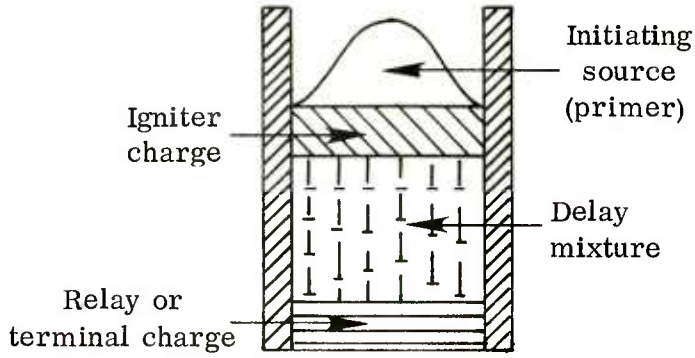

Figure 55. A Vented Delay Column

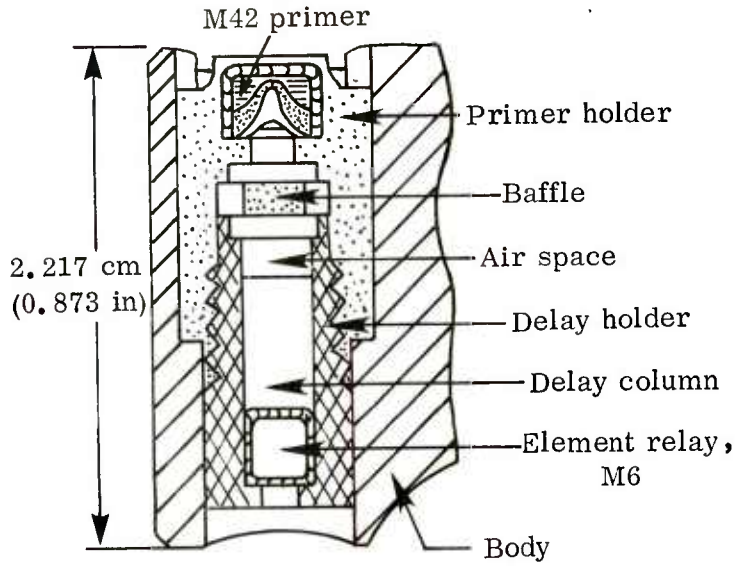

Figure 56. Delay Element, Obturated, M9

In either type of delay system, the delay mixture is the critical component of the delay element. The mixture should be stable, nonhygroscopic, and the ingredients should have the highest purity consistency possible. The particle size of the fuel should be held as closely as possible, and the uniformity of the mix is critical. Delay mixtures should be insensitive to friction, impact, heat, and electrical discharge but readily ignitable, and change minutely in performance with small change in ingredients. Most important of all, the burning rate should be reproducible within each batch and from batch to batch.

The majority of the delay mixtures tested and reported herein are of the gasless variety and they include: silicon/red lead; boron/barium chromate; tungsten delay compositions; manganese/barium chromate; and zirconium-nickel alloy/barium chromate types.

Red lead/silicon delay mixtures are the original gasless delay mixtures which were developed prior to WW II and are no longer found in use today in smoke devices and fuzes for smoke grenades.

Boron/barium chromate mixtures are used quite extensively and are considered by some as an ideal mixture because they are easily manufactured, readily ignitable, and capable of remaining reliable after long term storage under adverse conditions.

Tungsten delay mixtures, a mixture of tungsten/barium chromate and potassium perchloride powder, were developed to provide long burning times (40 in/sec). These mixtures compare favorably with the boron/barium chromate system as far as stability, ignitibility, and reproducibility.

Manganese-barium chromate-lead chromate D-16 powders are hygroscopic but, being in an obturated system, storage and stability are good. These mixtures are very reliable and reproducibility is good, but since they are hygroscopic, the tedious treatment to prevent moisture makes these mixtures undesirable.

The zirconium-nickel alloy/barium chromate mixtures offer a wide range of burning times. These mixtures are stable after long-term storage. These replaced the zirconium-nickel mixtures since the method of producing the nickel was undesirable. The zirconium-nickel alloy mixtures are easily ignited but insensitive to friction and impact.

DATA DISCUSSION

Data sheets for all delay mixtures are shown in Appendix A. Formulas for individual types of delay mixtures are given in tables 51, 53, 55, 57, and 59. Summaries of data are given in tables 52, 54, 56, 58, and 60. Table 61 is a summary of results for all delay mixtures.

Red Lead/Silicon Delay Mixtures

Red lead/silicon delay formulations are shown in table 51. The percentage of silicon ranges from 10 to 20% and a nitrocellulose/acetone binder is used in all cases. A summary of test results is given in table 52.

TABLE 51. TYPICAL RED LEAD/SILICON DELAY MIXTURE FORMULATIONS

	1	2	3	4
Silicon	20	15	12	10
Red lead	80	85	87.5	90
Nitrocellulose/acetone (10/90)	1.8			1.8
Nitrocellulose/acetone (8/92)		1.8	1.8	

These mixtures have high autoignition and decomposition temperatures. The gas volume averages 13 ml/g. The heat of combustion is quite low, ranging from 605 cal/g to 660 cal/g. Heat of reaction averages 310 cal/g. These values are approximately mid-range when compared with other types of delay mixtures.

TABLE 52. SUMMARY OF PARAMETRIC, STABILITY, SENSITIVITY AND OUTPUT DATA FOR RED LEAD/SILICON DELAY MIXTURES

		1	2	3	4
Autoignition temperature	° C	671	721	713	765
Decomposition temperature	° C	764	786	749	815
Density (bulk)	g/cm^3	2.46	2.4	2.3	2.49
Density (loading)	g/cm^3	2.8-3.8	2.8-3.8	2.8-3.8	2.8-3.8
Fuel/oxidizer ratio	x:1	0.25	0.18	0.14	0.17
Gas volume	ml/g	11	10.6	15	14
Heat of combustion	cal/g	660	650	649	605
Heat of reaction	cal/g	335	328	321	256
Hygroscopicity	95%	Good	Good	Good	Good
Thermal stability	75° C/48 hr	Good	Good	Good	Good
Vacuum stability	ml/gas/40 hr	0.1	0.1	0.1	0.1
Weight loss @ 50° C/48 hr	%	0.019	0.019	0.012	0.018
Card gap test results		N.D.	N.D.	N.D.	N.D.
Detonation test results		C.B.	N.D.	Burning	N.D.
Electrical spark	Joules	3.125	3.125	3.125	3.125
Friction (steel shoe)		INSENS	INSENS	INSENS	INSENS
Ignition and unconfined burning		No Expl	No Expl	No Expl	No Expl
Impact sensitivity	inches	>15	>15	>15	>15
Burn time	sec/cm	0.59	0.59	0.79	0.59
TNT equivalency	%	0	0	0	0

Hygroscopicity, thermal stability, vacuum stability, and weight loss results indicate that these mixtures are quite stable and compare favorably with the boron/barium chromate mixtures.

These mixtures are insensitive to friction, impact, card gap test, and ignition and unconfined burning tests. These mixtures ignited and burned in the detonation test configuration and they are relatively insensitive to electrical spark. Of all of the delay mixtures tested, these mixtures were the least sensitive to electrical spark by an order of magnitude.

The burn time in bulk form was rapid, ranging from 0.59 sec/cm to 0.79 sec/cm. There was no measurable pressure, and TNT equivalency is less than 1%. This indicates that these mixtures constitute minimal hazard in terms of an explosion.

Boron/Barium Chromate Delay Mixtures

Typical boron/barium chromate delay mixtures are shown in table 53. The summary of test results is shown in table 54.

TABLE 53. TYPICAL BORON/BARIUM CHROMATE DELAY MIXTURE FORMULATIONS

	1	2	3	4	5
	(PA-DP906)	(PA-DP587)	(PA-DP973)	(PA-DP573)	(PA-DP602)
Boron	10	5	10	15	19
Barium chromate	90	95	90	85	81
VAAR			1		

Autoignition and decomposition temperature are high in excess of 550°C, but not as high as the red lead/silicon delay mixtures. Gas volumes average less than 10%, with the exception of DP973, which has a value of 29 ml/g. Heats of combustion and heats of reaction are higher than the red lead mixture, but they still equate to the mid-range when compared to other types of delay mixtures.

Stability of these mixtures are exceptionally good, and of all the delay mixtures these types can be considered the most stable.

TABLE 54. SUMMARY OF PARAMETRIC, STABILITY AND SENSITIVITY DATA FOR BORON/BARIUM CHROMATE MIXTURES

		1	2	3	4	5
Autoignition temperature	°C	615	553	560	706	656
Decomposition temperature	°C	700	630	575	736	702
Density (bulk)	g/cm^3	1.8	1.76	1.12	1.92	1.9
Fuel/oxidizer ratio	x:1	0.11	0.05	0.1	0.18	0.23
Gas volume	ml/g	3.1	4	29.5	5	12
Heat of combustion	cal/g	1073	420	590	846	763
Heat of reaction	cal/g	515	265	463	502	276
Hygroscopicity		Good	Fair	Good	Good	Good
Thermal stability		Good	Good	Good	Good	Good
Vacuum stability	ml/gas/40 hr	0.01	0.06	0.07	-	0.03
Weight loss	%	0.08	0.09	0.14	0.09	0.56
Card gap tests		N.D.	N.D.	N.D.	N.D.	N.D.
Detonation tests		C.B.	C.B.	C.B.	C.B.	C.B.
Electrical spark	Joules	0.0023	0.270	0.025	-	0.025
Friction (steel shoe)		SENS	SENS	SENS	SENS	SENS
Ignition and unconfined burning		No Expl	No Expl	No Expl	No Expl	No Expl
Impact sensitivity	inches	12	740	15	15	10
Burn time	sec/cm	0.197	0.48	0.59	0.59	0.79
TNT equivalency	%	<1	-	<1	-	-

These mixtures were insensitive to the card gap test, ignition and unconfined burning tests, and impact. These mixtures were sensitive to friction and electrical spark.

Burn time in the bulk mixtures averaged less than 0.53 sec/cm. Even with a difference in fuel/oxidizer ratio, formulas 3 and 4 had similar burn times. There was no measurable output in terms of blast pressure in TNT equivalency tests, and the explosion hazards associated with these mixtures are minimal.

Tungsten Delay Mixtures

The formulations for tungsten delay mixtures are given in table 55 and a summary of test results is given in table 56.

TABLE 55. TYPICAL TUNGSTEN DELAY MIXTURE FORMULATIONS

	1	2	3	4	5	6	7
Tungsten	65	30	30	75	64	50	40
Barium chromate	24	55	55	10		40	47
Potassium perchlorate	10	10	10	10	10	10	13
VAAR	1				1		
Diatomaceous earth		4	5	5			
Vitron		1					
Dechlorane					15		

Autoignition and decomposition temperatures are lower than some of the other delay mixtures. In fact, they have the lowest ignition values of all of the delay mixtures. Gas volume averages less than 6 ml/g, and compared with the boron/barium chromate and the red lead/silicon mixtures, these values are an order of magnitude less than either. As a gasless mixture, they are only tested by the zirconium-nickel alloy which has a gas volume on an average of 2.75 ml/g. These mixtures have the highest heats of combustion of all of the delay mixtures tested, but the heat of reaction values were the lowest of all of the delay mixtures reported.

There were no hygroscopicity test data reported on this group; however, they are relatively stable mixtures and compare favorably with the boron/barium chromate mixture. This was evidenced in the vacuum stability results and the thermal stability results.

These mixtures were insensitive to friction, impact, ignition and unconfined burning, and card gap tests. All of the samples burned in the detonation test configurations and were sensitive to electrical spark ignition.

Burn time data varied significantly with each mixture and could be made to vary from a low of 0.04 sec/cm to a high of 7.4 sec/cm. TNT equivalency of these mixtures was less than 1% and constituted little or no explosion hazard. This is primarily due to the fact that these mixtures are gasless. Only those mixtures which produce gas in excess of 20 ml/g have a tendency to explode.

TABLE 56. SUMMARY OF PARAMETRIC, SENSITIVITY AND STABILITY OF VARIOUS TUNGSTEN DELAY MIXTURES

		1	2	3	4	5	6	7
Autoignition temperature	° C	370	391	388	445	385	270	305
Decomposition temperature	° C	421	414	433	506	436	305	346
Density (loading)	g/cm^3	-	-	4.88	4.88	-	-	-
Fuel/oxidizer ratio	x:1	1.91	0.46	0.46	3.75	6.4	1	0.67
Gas volume	ml/g	7	5.8	6	5.5	6.3	4.3	4.1
Heat of combustion	cal/g	840	1187	1080	840	765	735	712
Heat of reaction	cal/g	249	-	-	265	258	233	247
Thermal stability		Good	Good	Good	Good	Good	Good	Good
Vacuum stability	ml/gas/40 hr	0.14	-	-	-	-	-	-
Card gap		N.D.	N.D.	N.D.	N.D.	N.D.	N.D.	N.D.
Detonation		Burned	Burned	Burned	Burned	Burned	Burned	Burned
Electrical spark	Joules	0.749	0.5	0.75	0.825	0.5	0.5	0.725
Friction (steel shoe)		INSENS	INSENS	INSENS	INSENS	INSENS	INSENS	INSENS
Ignition and unconfined burning		No Expl	No Expl	No Expl	No Expl	No Expl	No Expl	No Expl
Impact sensitivity	inches	33	15	15	15	>15	22	18
Burn time	sec/cm	-	0.8-6.2	0.04-1.6	7.326	-	-	-
TNT equivalency	%	<1	-	-	-	-	-	-

Magnesium/Barium Chromate Delay Mixtures

Table 57 lists formulations for manganese/barium chromate mixtures and table 58 gives a summary of test results.

TABLE 57. TYPICAL MANGANESE/BARIUM CHROMATE DELAY MIXTURE FORMULATIONS

	1	2	3	4
Manganese	29	45	33	32.8
Lead chromate	26	55	37	30.2
Barium chromate	45		30	37

Autoignition temperatures range from 336° C to 460° C and decomposition temperatures range from 382° C to 522° C. These values are higher than the tungsten and zirconium-nickel alloy type delay but are not as high as the boron or silicon red lead types. Gas volume for this group averages 14 ml/g, which is the most for any of the groups reported. Heat of combustion and heat of reaction values compare with those tungsten type delay mixtures.

Stability of these mixtures is poor and care is necessary in the manufacturing process to prevent moisture from entering the system.

TABLE 58. SUMMARY OF PARAMETRIC, STABILITY, SENSITIVITY AND OUTPUT DATA FOR MANGANESE/BARIUM CHROMATE DELAY MIXTURES

		1	2	3	4
Autoignition temperature	° C	452	336	460	420
Decomposition temperature	° C	496	382	522	478
Fuel/oxidizer ratio	x:1	0.41	0.82	0.49	0.49
Gas volume	ml/g	12.6	15.4	18.3	11.4
Heat of combustion	cal/g	790	745	851	830
Heat of reaction	cal/g	258	260	256	262
Hygroscopicity		Good	Good	Good	Good
Thermal stability		Good	Good	Good	Good
Card gap test		N.D.	N.D.	N.D.	N.D.
Detonation test		Burned	Burned	Burned	Burned
Electrical spark	Joules	0.725	0.825	1.125	0.6
Friction (steel shoe)		INSENS	INSENS	INSENS	INSENS
Ignition and unconfined burning		No Expl	Nc Expl	No Expl	No Expl
Impact sensitivity	inches	22	18	15	15
Burn time	sec/cm	0.8-5.4	0.83	3.31	5.31

These delay mixtures were insensitive to impact, friction, ignition and unconfined burning, and card gap test results. They burned in the detonation test configuration and were relatively sensitive to electrical spark. The average initiation value for this type of delay composition was 0.82 $\pm$ 0.22 joules. Still, these mixtures are not as sensitive as boron, tungsten, or the zirconium-nickel alloy type delay mixtures.

There were no TNT equivalency type tests performed on any of these mixtures, but since these mixtures are gasless, it is postulated that the explosive hazards are minimal. Burn times reported varied from a low 0.8 sec/cm to a high of 5.4 sec/cm. The actual burn time varies with each formulation.

Zirconium-Nickel/Barium Chromate Delay Mixtures

Table 59 shows the zirconium-nickel/barium chromate formulations and table 60 is a summary of test results.

Parametric values compare favorably with the other type delay mixtures. There were no significant differences in the autoignition and decomposition temperatures or heats of combustion and reaction values. The gas volumes reported are the least of all of the delay mixtures with an average value of 2.75 $\pm$ 4.6. The value reported for formula number 2 caused the large spread in the data.

TABLE 59. TYPICAL ZIRCONIUM-NICKEL/BARIUM CHROMATE DELAY MIXTURE FORMULATIONS

	1	2	3	4	5	6	7	8
Zirconium	21							
Barium chromate	79	60	31	80	75	83	80	77
Zirconium-nickel alloy 70/30		26	54					
Zirconium-nickel alloy 50/50				20	20	17	17	23
Potassium perchlorate		14	15		5		3	

Stability of these mixtures is quite good. Hygroscopicity and thermal stability results are good. The vacuum stability data are about average for pyrotechnic mixtures.

These compositions are insensitive to impact, ignition and unconfined burning, and card gap test. These delay mixtures are sensitive to friction and electrical spark initiation. When they react, these mixtures burn but do not explode in both the friction and electrical spark tests. They also burned in the detonation test configuration.

There were no TNT equivalency testing or pressure time measurements reported, but as with other gasless delay mixtures it is assumed that explosive hazards are minimal.

TABLE 60. SUMMARY OF PARAMETRIC, STABILITY AND SENSITIVITY OF ZIRCONIUM-NICKEL/BARIUM CHROMATE DELAY MIXTURES

		1	2	3	4	5	6	7	8
Autoignition temperature	° C	418	325	335	351	401	362	467	375
Decomposition temperature	° C	476	370	407	396	427	381	426	401
Fuel/oxidizer ratio	x:1	0.27	0.35	1.17	0.25	0.25	0.2	0.2	0.29
Gas volume	ml/g	-	13	2.1	0.8	1.4	0.2	0.7	1
Heat of combustion	cal/g	426	571	407	388	396	388	476	419
Heat of reaction	cal/g	396	521	327	190	225	169	200	202
Hygroscopicity	95%	Good	Good	Good	Good	Good	Good	Good	Good
Thermal stability	48 hr @ 75° C	Good	Good	Good	Good	Good	Good	Good	Good
Vacuum stability	ml/gas/40 hr	0.13	0.11	0.2	0.16	0.16	0.11	0.16	0.19
Card gap test results		N.D.	N.D.	N.D.	N.D.	N.D.	N.D.	N.D.	N.D.
Detonation test results		Burn	Burn	Burn	Burn	Burn	Burn	Burn	Burn
Electrical spark	Joules	0.0013	0.725	0.05	0.025	0.05	0.05	0.025	0.025
Friction (steel shoe)		Burn	Burn	Slight Revet	Burn	Partial Burn	Partial Burn	INSENS	Partial Burn
Ignition and unconfined burning		No Expl	No Expl	No Expl	No Expl	No Expl	No Expl	No Expl	No Expl
Impact sensitivity	inches	10	22	24	18	22	19	22	16
Burn time	sec/cm	<0.4	0.39	1.0	-	-	-	6.1	-

SUMMARY

Autoignition temperatures vary with the type of delay mixtures, but generally, they are higher than other pyrotechnic groups such as initiators, smoke, and gas producers. The same can be said for decomposition temperature. Gas volume for these mixtures are significantly less than most other pyrotechnic mixtures, possibly with the exception of dim igniter mixtures and some of the initiator mixtures. Heats of combustion and reaction values are less than other types of pyrotechnic mixtures. In fact, the values reported are an order of magnitude less than all other types of pyrotechnics. However, the caloric output is not as important as fire transfer to the relay element or main charge.

Stability of these mixtures is good to excellent with the exception of the manganese/barium chromate mixtures which are hygroscopic. In spite of the good stability characteristics, there will be some variance in burn times after long term storage.

TABLE 61. SUMMARY OF RESULTS FOR DELAY MIXTURES

		Red lead/ silicon delay mixes	Boron delay mixes	Tungsten delay mixes	Manganese barium chromate delay mixes	Zirconium/ nickel alloy delay mixes
Autoignition temperature	° C	718 ± 39	618 ± 65	365 ± 59	417 ± 57	372 ± 34
Decomposition temperature	° C	779 ± 29	669 ± 65	409 ± 65	470 ± 61	411 ± 33
Density (bulk)	g/cm^3	2.41 ± 0.08	1.7 ± 0.33	-	-	-
Density (loading)	g/cm^3	2.8-3.8	-	4.88	-	-
Fuel/oxidizer ratio	x:1	0.17 ± 0.06	0.13 ± 0.07	2.09 ± 2.23	0.55 ± 0.18	0.32 ± 0.33
Gas volume	ml/g	13 ± 2	10.7 ± 11	5.6 ± 1.05	14.4 ± 3.1	2.75 ± 4.6
Heat of combustion	cal/g	641 ± 25	738 ± 245	880 ± 183	804 ± 47	434 ± 62
Heat of reaction	cal/g	310 ± 36	404 ± 124	250 ± 12	259 ± 3	279 ± 125
Hygroscopicity	%	Good	Fair to Good	-	Good	Good
Thermal stability	° C	Good	Good	Good	Good	Good
Vacuum stability	ml/gas/40 hr	0.1	0.04 ± 0.03	0.14	-	0.15 ± 0.03
Weight loss	%	0.017 ± 0.003	0.19 ± 0.21	-	-	-
Card gap test results		N.D.	N.D.	N.D.	N.D.	N.D.
Detonation test results		Burning	C.B.	Burning	Burning	Burning
Electrical spark	Joules	3.125	0.08 ± 0.13	0.65 ± 0.14	0.82 ± 0.22	0.119 ± 0.245
Friction (steel shoe)		INSENS	SENS*	INSENS	INSENS	SENS
Ignition and unconfined burning		No Expl	No Expl	No Expl	No Expl	No Expl
Impact sensitivity	inches	15	18 ± 12	20.5 ± 7	17.5 ± 3.3	19 ± 4.5
Burn time	sec/cm	0.64 ± 0.1	0.53 ± 0.22	6.07 ± 6.4	2.56 ± 2.17	1.97 ± 2.77
TNT equivalency	%	0	1	1	-	-

*Sensitive to the friction apparatus in that composition burns but does not explode

Delay mixtures ideally, by definition, are insensitive to friction, impact, and electrical spark initiation. Of the mixtures reported, they were found to be insensitive to impact and friction with the exception of zirconium-nickel alloy which was sensitive to friction. These mixtures burned rather than exploded, but still they reacted to the action of the steel shoe. All of these mixtures were sensitive to electrical spark ignition. This is in sharp contrast with the fundamental requirements of a good delay mixture. Electrical spark ignition energy is dependent upon particle size, intimacy of the mixture, fuel/oxidizer ratio, and the type of fuel and oxidizer employed. The majority of the delay mixtures used constituents that pass through a standard U.S. 200 sieve so that the particle size is fine. If the mixture is a binary, or when they are ternary mixtures which include an additional oxidizer to increase ignition sensitivity, their sensitivity to electrical spark could be explained. Also, electrical spark initiation levels were established on the bulk mixtures where the mixtures would be more sensitive than when consolidated with the column. Whatever the explanation, care should be exercised in the manufacturing and handling to prevent electrostatic buildup.

None of these delay mixtures reported showed any tendency to explode and explosion hazards are minimal. This is evidenced in the TNT equivalency data that was obtained. Burn times varied as to the function and type of mixtures, and no significant variance was noted.

All in all, the delay mixtures compared favorably with other types of pyrotechnic mixtures. Significant differences were noted in gas volumes, electrical spark ignition levels, and impact sensitivities. They are somewhat less sensitive to impact than other types of mixtures and are more sensitive to electrical spark ignition with the exception of initiator devices; and since these were primarily gasless mixtures, the gas volume generated was considerably less than most other types of pyrotechnics.

SUMMARY OF BULK TESTING

The data compiled on bulk pyrotechnics have been arranged for definable user groups, and each individual use is further subdivided for user convenience. Each chapter reports complete results on one type of pyrotechnic material, and the data sheets in the appendices were formatted with the same intent in mind. It is hoped that this format will be found useful by safety, developer, manufacturer, and user personnel.

The majority of this reported data was a part of an effort of the Picatinny Pyrotechnic Laboratory and Edgewood Arsenal that spanned the period from 1969 to 1976. It does not take into account the extensive test programs of similar nature by the Air Force and Navy Departments. Wherever data could be obtained from other sources, they were noted and included. Therefore, what is reported may constitute only a small portion of the data that may have been generated in this time frame. Many more pyrotechnic formulations might have been added, but for the most part, the data concerning them were incomplete. It was felt that fewer formulations with more complete information would be more useful to the user than a larger number with incomplete information. The sole purpose was to fill a void between the excellent information already in print in the form of theoretical applications and detailed user instructions, both of which often failed to provide definitive data that were needed throughout the usage cycle of a pyrotechnic composition.

In qualifying the data obtained, it should be noted that the values are not absolute. Every effort was made to reduce variables when the tests were conducted, and duplication of test results by other agencies was sought, but it was found that batch-to-batch variations could not be entirely eliminated. In some cases, purity of the ingredients had an effect; we have seen that government regulations impact the production of raw ingredients and has affected the results. Where there were gross errors or variation in the results, and their cause could not be determined, it was felt that it was better to report no value at all rather than reporting ambiguity. Finally, there are no attempts to draw conclusions, but specific trends were noted and reported.

Table 62 is the data summary by test groups.

Parametric data are in good agreement within a given group. Variation of the data was the result of individual formulas being somewhat different in formulation to provide the terminal effect.

Autoignition temperatures were lower than the decomposition temperatures. The rate at which heat was applied in both the autoignition and decomposition tests had a major effect on the reported values. This is shown graphically in figure 57. The standard heating rate for differential thermal analysis (DTA) is 5° C/min. It can be seen from the DTA data for colored smoke that decomposition or ignition temperature can vary significantly due to the heating rate. The sample material lags the heat being applied and the actual decomposition temperature is lower than indicated when the heat is applied at a rapid rate. All data reported are at the 5° C/min heat rate unless otherwise noted.

TABLE 62. SUMMARY OF TEST RESULTS BY GROUPS

		Initiators	Illuminants	Smokes	Gas	Sound	Heat	Time
Autoignition temperature	°C	255 ± 96	497 ± 123	180 ± 66	162 ± 16	506 ± 169	447 ± 199	448 ± 159
Decomposition temperature	°C	277 ± 102	561 ± 135	205 ± 75	182 ± 24	550 ± 168	505 ± 224	517 ± 153
Density (bulk)	g/m^3	-	0.98 ± 0.31	0.85 ± 0.23	1.39 ± 0.42	0.98 ± 0.42	1.31 ± 0.49	2.02 ± 0.45
Density (loading)	g/m^3	1.71 ± 0.55	2.21 ± 0.59	1.61 ± 0.27	1.48 ± 0.27	-	-	3.62 ± 0.82
Fuel/oxidizer ratio	x:1	1.16 ± 1.8	0.68 ± 0.47	0.65 ± 0.6	0.66 ± 0.24	0.83 ± 0.46	0.81 ± 0.5	0.76 ± 1.33
Gas Volume	ml/g	30 ± 59	52 ± 21	23 ± 5	-	85 ± 67	27 ± 17	8.2 ± 6.8
Heat of combustion	cal/g	2619 ± 623	2728 ± 1514	2794 ± 887	2261 ± 1104	2666 ± 789	1746 ± 1198	682 ± 222
Heat of reaction	cal/g	-	1475 ± 287	983 ± 319	-	933 ± 112	830 ± 495	299 ± 101
Hygroscopicity	95%	Poor	Poor to good	Good	Good	Good	Good	Poor
Vacuum stability	ml/gas/40 hr	0.21 ± 0.11	0.27 ± 0.13	0.06 ± 0.16	-	0.2 ± 0.07	0.11 ± 0.07	0.11 ± 0.05
Thermal stability	75° C	Good	Good	Good	Good	Good	Good	Good
Card gap test results		-	N.D.	N.D.	N.D.	N.D.	N.D.	N.D.
Detonation test results		-	Mush	N.D.	N.D.	Mush	Burning	Burning
Electrical spark	Joules	0.038 ± 0.02	33 ± 23	10.5 ± 19.8	13 ± 25	0.6 ± 0.4	1.72 ± 2.55	0.80 ± 1.04
Friction (steel shoe)		Sens	Sens	Insens	Insens	Sens	Insens	Sens
Ignition & unconfined burning		No Expl.	No Expl.	No Expl.	No Expl.	No Expl.	No Expl.	No Expl.
Impact sensitivity	cm (in)	3.75	12 ± 5	14 ± 4	11 ± 6	7 ± 3	12 ± 4	18 ± 6
Burn time	sec/cm	-	1.75 ± 1.49	4.79 ± 2.41	2.84 ± 2.8	0.39 ± 0.35	2.13 ± 2.19	1.58 ± 2.14
TNT equivalency	%	-	25 ± 19	6 ± 2	16 ± 16	63 ± 25	18 ± 10	1

Bulk and loading density have an effect upon the terminal reaction. Pyrotechnics as a whole are more sensitive in the unconsolidated state because of the larger burning surface. The same formulations are less sensitive to friction, impact, and electrical spark in the consolidated state. An increase in density also increases the burn time of a mixture.

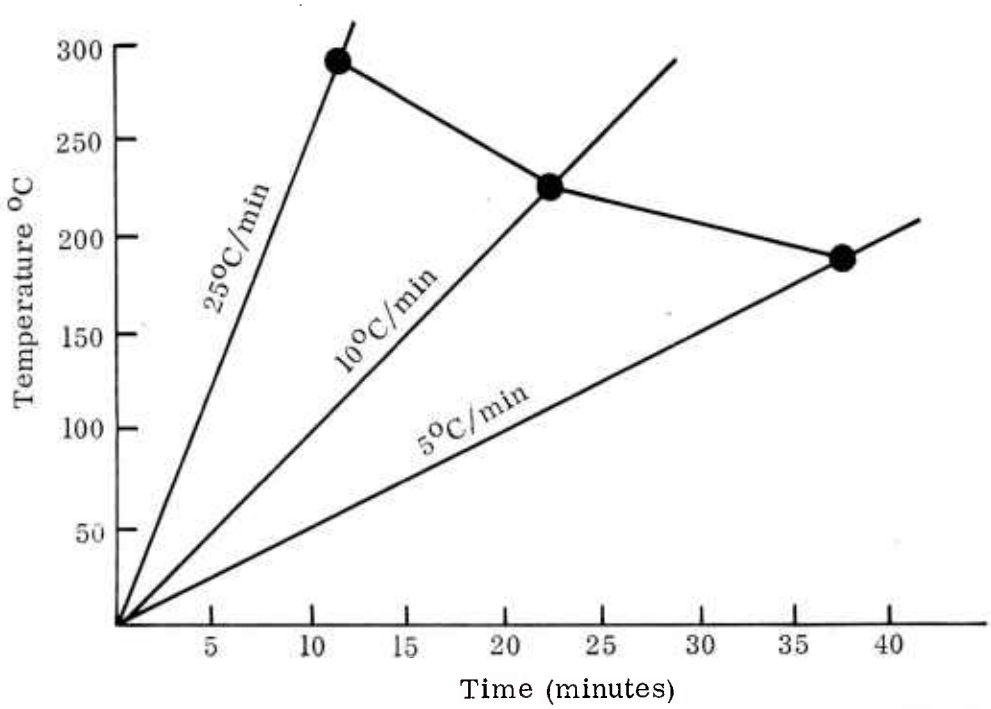

Figure 57. DTA Results for Colored Smoke Based Upon Applied Heat Rate

The particle size of constituents, particularly the fuel and oxidizer, have a pronounced effect upon the sensitivity of a given mixture. The type of fuel and oxidizer also have a significant effect; e.g., potassium perchlorate versus potassium chlorate affects sensitivity as well as the potential for explosion. If there is a variation in the formulation above or below stoichiometric the output may be either increased or decreased, depending upon the variance of the fuel or oxidizer. Binders added to the formulation may also cause an increase or decrease in sensitivity.

Gas volume varies with each type of mixture, but more particularly between pyrotechnic groups. Illuminants, smokes, sound and gas producers generate large volumes of gas in creating the terminal effect; accompanying this is increased probability of explosion compared with gasless mixtures.

Heats of combustion and heats of reaction vary, both within groups and between groups. No attempt has been made to correlate heat of combustion with output reactions, as has been done with explosive compositions. Being pyrotechnics by definition, the caloric output of various mixtures would exceed those of high explosives; they are different types of reactions. Caloric output values are more important to the developer than to users or to testing and safety activities.

Stability varied significantly within each grouping. The choice of fuel and oxidizer has a major effect upon hygroscopicity and vacuum stability results. Certain salts used as oxidizers are very hygroscopic and/or volatile, making it necessary to use binders to reduce moisture absorption. Thermal stability data in almost every case indicated that little moisture (less than 0.5%) and/or volatiles were driven off at 75° C in a 48-hour period. This test alone would be somewhat misleading as to the moisture that could be absorbed under long-term storage conditions. The results of this test do not always correlate with weight loss tests or hygroscopicity data. Vacuum stability results indicated that the majority of the mixtures were unstable since the volume of gas generated was greater than 0.2 ml. The suggestion that this test serves no real purpose for pyrotechnics and should be deleted from standard test requirements has been discussed previously[28]. It has been shown that the autoignition temperatures of some pyrotechnic mixtures are less than the 120°C. Samples have burned during the test, ranging at times from 10 to 16 hours into the test. Weight loss determination has yet to be considered as a standard test method; however, it has been a most useful tool in determining the amount of volatiles and/or moisture present in a composition after long-term storage, and there seems to be a correlation between this value and the 50% humidity hygroscopicity test.

Sensitivity of a pyrotechnic mixture is influenced by many factors. Increased sensitivity results from the addition of certain binders, decrease in particle size of the fuel, type of oxidizer, and the type of fuel. Decreased sensitivity may result with the use of some additives, binders, and larger particle size. Particle size of the oxidizer does not necessarily affect the sensitivity of a given mixture.

Of the mixtures subjected to the card gap test configuration, none of the mixtures reacted positively, that is, showed evidence of detonation with a clean hole in the witness plate. For this reason, the test method has been criticized as invalid for pyrotechnics. Since a pyrotechnic is not an explosive, it could be predicted that the results would be neg-

ative. However, some of the pyrotechnic mixtures did pentrate the witness plate without making a clean hole. An intimate mixture of sulfur and potassium chlorate has given the indication of a detonation in this configuration. Those mixtures that failed to give positive result still caused some deformation of the witness plate. As a result, some experimenters have attempted to correlate the indentation values to output or a measurement of brisance. There is no known evidence of a valid correlation.

Several mixtures showed evidence of mushrooming as the result of the detonation test. This validity of the test method as a pyrotechnic test has also been questioned, but those mixtures that showed evidence of mushrooming have TNT equivalency values greater than 30%.

Electric spark sensitivity varied between groups and within groups. Initiator and delay mixtures were the most sensitive, while illuminants and smokes were least sensitive. However, in each grouping some mixtures were found to be quite sensitive, as is evident from the standard deviations. The majority of the pyrotechnics reported were insensitive to friction, but this also varied within the groups and between the groups. Impact sensitivity data varied widely, but with the exception of the initiation mixtures the impact values compared favorably with noninitiating high explosives. It was noted that there does not seem to be any particular relationship between a mixtures sensitivity to electric spark and its sensitivity to friction and/or impact. Sensitivity to electrical spark, friction, and impact was influenced greatly by particle size and the type of fuel and oxidizer used in the formulation, and, in some cases, the binder. One cannot assume that similar compositions will have similar sensitivity values for electrical spark, friction, and impact; it is necessary to test each formulation.

Ignition and unconfined burning test results are somewhat meaningless in that when a pyrotechnic sample of 5.08 cm^3 (2 in^3) is placed in a kerosene-soaked sawdust bed, a pyrotechnic reaction occurs. The purpose of the 5.08 cm^3 (2 in^3) is to determine if the critical diameter of a given high explosive or propellant has been exceeded. As shown in the data sheets, the critical diameter (the minimum diameter at which an explosion will result) is quite large. Usually for pyrotechnic mixtures it is 3 to 4 orders of magnitude greater than that reported for explosives and propellants, and the validity of this test for pyrotechnic mixtures has been questionable. Test results to date do not indicate any validity to the test method. In fact, even high explosives[47] have given negative results. It has been proposed by a number of experimenters in this country and NATO countries that a different type of test be substituted for the ignition and unconfined burning test. No other test has yet been found to be acceptable. As reported here, none of the mixtures exhibited any explosive characteristics in this configuration.

Burn-time values were reported for reference only and do not reflect the values reported for the end item after consolidation. Consolidation increases the burn time.

Critical mass and critical diameter tests were conducted on smokes, gas producers, and an illuminant mixture. The critical masses and diameters were in excess of 1 meter, with the exception of the illuminant mixture. Also, those samples that indicated mushrooming of the lead cylinder in the detonation test configuration may be suspected of having a critical diameter less than 1 meter.

Pressure-time data were very limited, but the mixtures which exhibited rapid rates of pressure rise, 689 kPa/sec (100 psi/sec) or greater, tend to have a TNT equivalency output. These data also correlate with gas volume data in excess of 25 ml/g.

TNT equivalency tests have been conducted on only a very few pyrotechnic mixtures since it was felt that pyrotechnic mixtures were not energetic enough to be of concern. However, incident/accidents analysis does indicate that these mixtures can produce a rapid reaction with sufficient force to destroy loading facilities, and fatalities have been recorded with some pyrotechnic mixtures. Tests at the beginning were performed in a pipe bomb configuration and later in the established surface burst configuration. There are significant differences in the actual TNT equivalency values in the data obtained from the pipe bomb and the standard surface burst technique. In the pipe bomb configuration, heavy confinement causes a much more rapid buildup before the rupture of the pipe, resulting in higher TNT equivalency values than found when little or no confinement is used, as in the surface burst method. The surface burst method uses a strong booster, and when calculations are made, an iterative process is used to factor out the contribution of the booster. McKnown [48] reports such work in determining the TNT equivalency of R284, I-559 igniter mixture, and I-560 subigniter mixture.

TNT equivalency values for several illuminant mixtures (white flare and photoflash mixtures) were in excess of 10%, which is the maximum acceptable equivalency for a DoD Class 1.3 material. Any value above 10% makes a mixture automatically a DoD Class 1.1 whatever the outcome of the standard TB700-2 tests.

TNT equivalency results for pyrotechnic mixtures have been ignored in the past, but the occurrence of several catastrophic accidents indicates that this area should be investigated much more extensively. Certainly economics should not be the governing factor for not conducting such tests; the results reported here demonstrate that energetic reactions of sufficient magnitude to cause bodily harm and damage to plant facilities are possible.

END ITEM TESTS

BACKGROUND

End item tests are conducted primarily to determine the classification and compatibility of given materials in the final form of intended use. Based upon specific results such as an explosion or mass fire hazards, a quantity distance criterion can be established. Compatibility in this case should not be confused with tests that are performed on bulk material to determine if a reaction occurs when two different mixtures in close proximity have a chemical reaction with one another. Rather, compatibility of end items is concerned with components that might mass detonate or pose fire hazards.

Evaluation of end item munitions is currently made from test data obtained from specific tests in accordance with chapter 4, TB700-2. This document defines the test requirements for end item munitions manufactured, packaged, and ready for field use. The end items are tested for their tendency to intrapropagate (one or more munition within a single container), interpropagate (the tendency to propagate from one container to another), and the reaction resulting from burning the munition in an intense fire. The specific tests are: Detonation Test A, Detonation Test B, and External Heat Test C.

Interpretation of end item test results is shown in figure 58 and leads to the following designation:

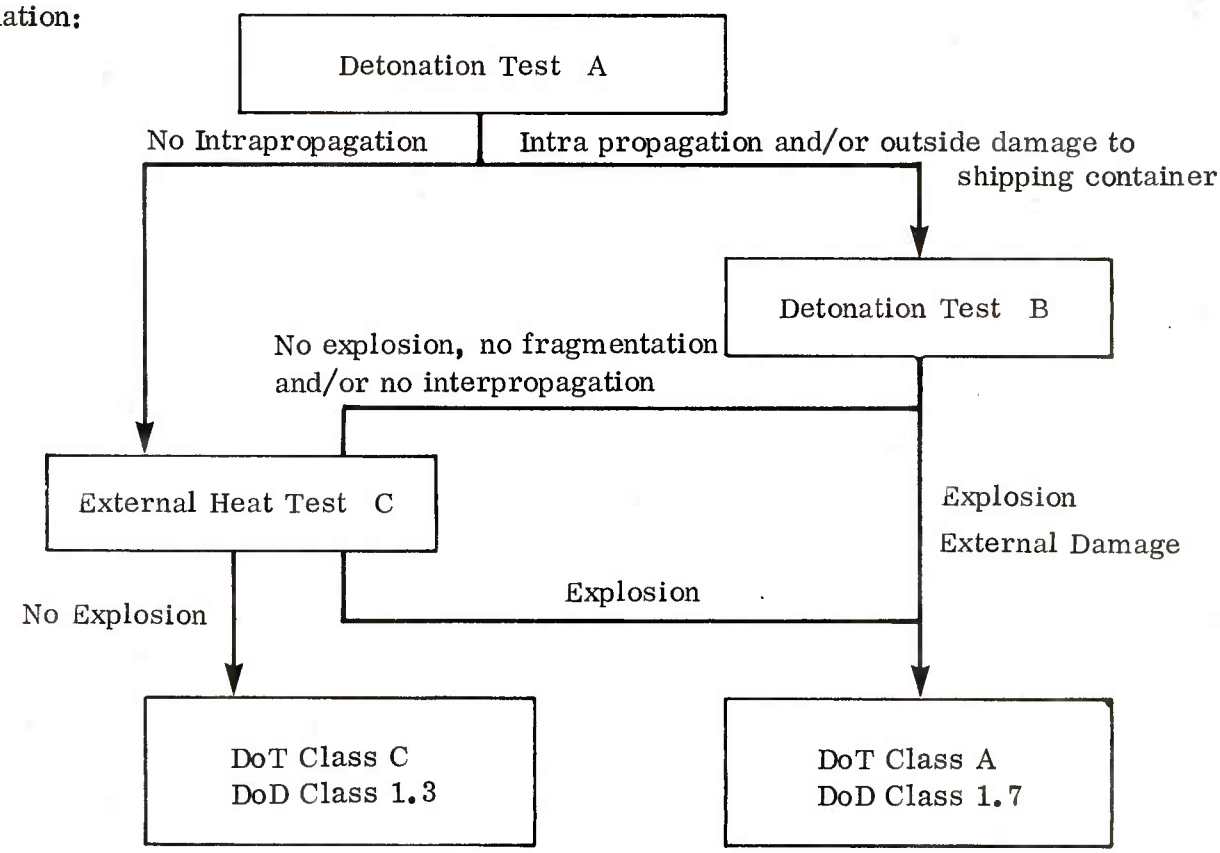

Figure 58. Interpretation of End Item Test Results in Accordance with TB700-2

DoT Class A (DoD Class 1.1) - if an explosion results from detonation test A, detonation test B, and external heat test C and/or fragment dispersion.

DoT Class C (DoD Class 1.3) - if there were no explosions in detonation test A and external heat test C and no fragment dispersion.

Detonation test A is conducted on end items packaged with more than one item per standard shipping container to determine if the functioning of one item would cause other items in the storage container to function. The most centrally located item in the package is primed by its own initiating device or by an engineers' special J-2 blasting cap. The results of the test determine if adjacent acceptor items in the container function and/or the outside of the container is ruptured. Additional information includes blast hazard, fragmentation, and fire dispersement hazard. This test is conducted a minimum of five times unless communication to adjacent items within the container or damage to the outside of the container occurs first. If such damage or propagation occurs, then Detonation Test B must be conducted; otherwise a single external heat test is conducted on multiple shipping containers. Typical test set up is shown in figure 59.

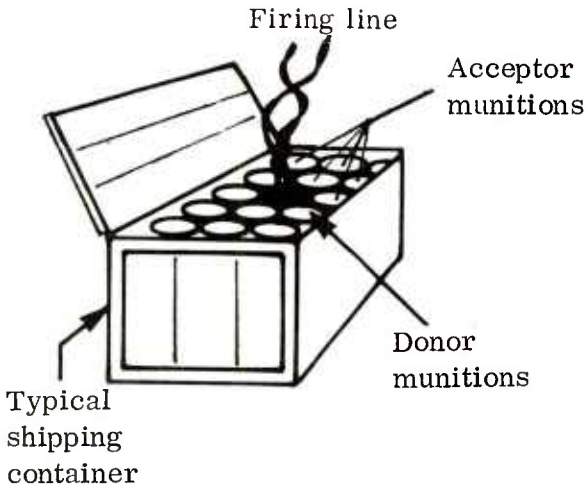

Figure 59. Typical Detonation Test A Set Up

Detonation test B is conducted to determine if the functioning of items in a standard shipping container causes items in adjacent shipping containers to function. This test is conducted when the detonation test A resulted in intrapropagation and/or outside damage to the container. An end item in the donor container which is closest to an item in the adjacent acceptor container is primed and initiated by its own fuze or by a J-2 engineers' special blasting cap. This assures that the acceptor container is subjected to the maximum output effects of the donor material. Test results determine if propagation resulting from fragmentation, blast, and fire dispersion occurs from one container to another. This test is conducted a minimum of five times unless interpropagation between containers occurs first.

A typical test set up is shown in figure 60. The placement of the acceptor container adjacent to the donor container is based partly upon the type of end item, so that the maximum output effect of the donor item reacts upon the acceptor container.

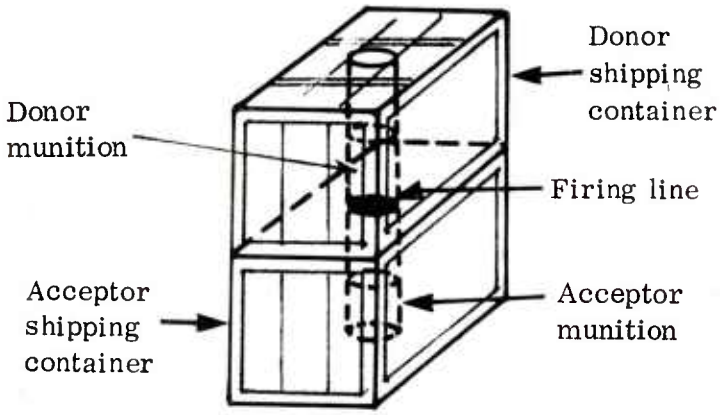

Figure 60. Typical Detonation Test B Configuration

A modified detonation test B is performed in conjunction with the standard test B. In this test, additional shipping containers are placed in contact with and adjacent to the donor item to approximate shipping or storage more realistically to determine if the additional confinement produces markedly different results. The donor container is confined on all sides and the donor end item closest to an adjacent acceptor container is initiated in the same manner as in detonation test B. Documentation for the test includes acceptor container damage, mass detonation, interpropagation to one or more acceptor containers, fire hazards, and fragmentation dispersion. Figure 61 shows a typical test set up. This test is

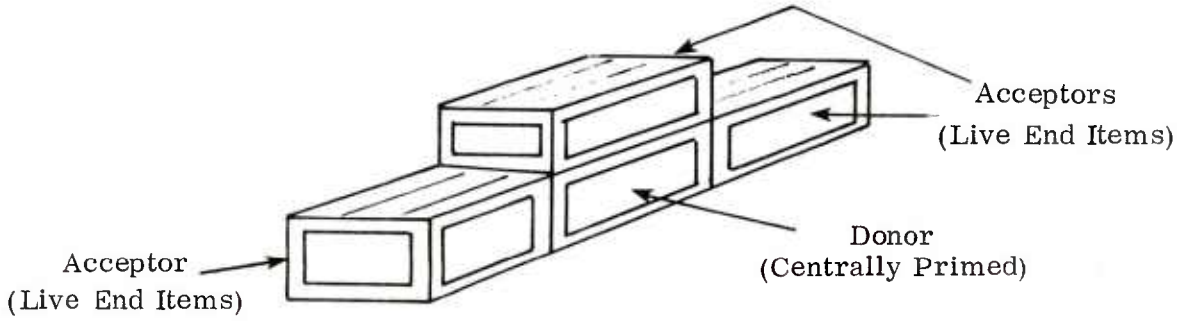

Figure 61. Modified Detonation Test B

not a standard test per TB700-2; however, the NATO document[30] which DoT and DoD are adapting, contains similar standard. This is now the accepted method for detonation test B. Pyrotechnics, according to TB700-2, had been exempted from confinement in the end item configuration tests, although the reason was not clear. It can be assumed, however, that if pyrotechnic end items had been tested under confinement in the past, the results for some would have been more severe than reported.

External heat test C is designed to simulate a condition in which multiple shipping containers (2-6) of end items are completely enveloped in an open flame. The containers are arranged in a compact stack, approximating a cube, then secured with steel bands in two directions so that the stack is kept intact until initiation of one or more of the shipping containers occurs. The steel banding is located so that it does not significantly affect dispersal of fragments from any of the end item containers. The stack of containers is placed on a 76.2 cm (30 in) base of a crib of sufficient size diameter to hold the cube, and the base of the crib is filled with loose scrap lumber, which also is piled around and over the end items so that a hot fire can be sustained. The entire mass is then saturated with approximately 189 liters (50 gal) of diesel fuel and ignited by electric matches. Two 51 g (2 oz) packs of smokeless powder are placed 180° apart at the base of the crib. Documentation of test results include whether detonation, fragmentation, and blast overpressure occur. Fragment dispersion data include type, angle, and distance from pyre. Still photos before and after, as well as motion picture coverage, are required. Figure 62 shows typical test set up.

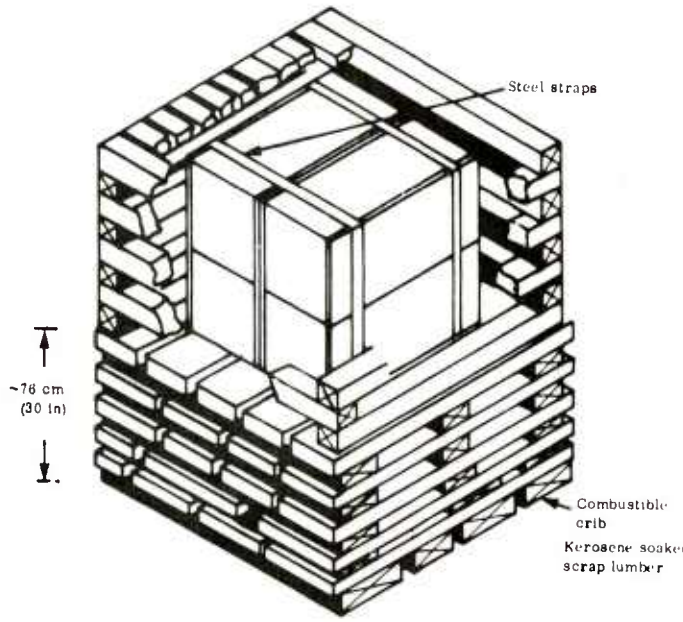

Figure 62. Typical External Heat Test C

These four tests constitute the current end item classification tests. The new classification document will adapt the NATO STANG [30] method, in which confinement will be required for both detonation tests A and B.

End item tests that may be conducted in addition to the standard classification tests include the following:

Bullet impact tests are conducted to determine sensitivity of pyrotechnic end items, which are used in battle field or related conditions to see if they would cause unwanted initiation or reaction. A 0.30 caliber bullet is fired from a bench mount apparatus from a distance of 27 m (90 ft) into a single end item container so that a centrally located item is struck by the bullet. Five tests are conducted on each of five new containers. The data are evaluated on the basis of detonation, propagation between end items, damage to outside container, and if acceptor end item functions. If no reaction occurred in any of the trials of the single bullet test then a multiple of five rounds are fired at the end item in rapid succession and the results are evaluated the same as the single-round configuration. If a reaction occurs from either of the single or multiple bullet tests and causes damage to the shipping container (other than from the bullet) then an additional shipping container may be placed adjacent and in contact with, or atop of the donor container, and the single and/or multiple firing mode repeated. Additional results such as interpropagation are recorded. A typical test set up is shown in figure 63.

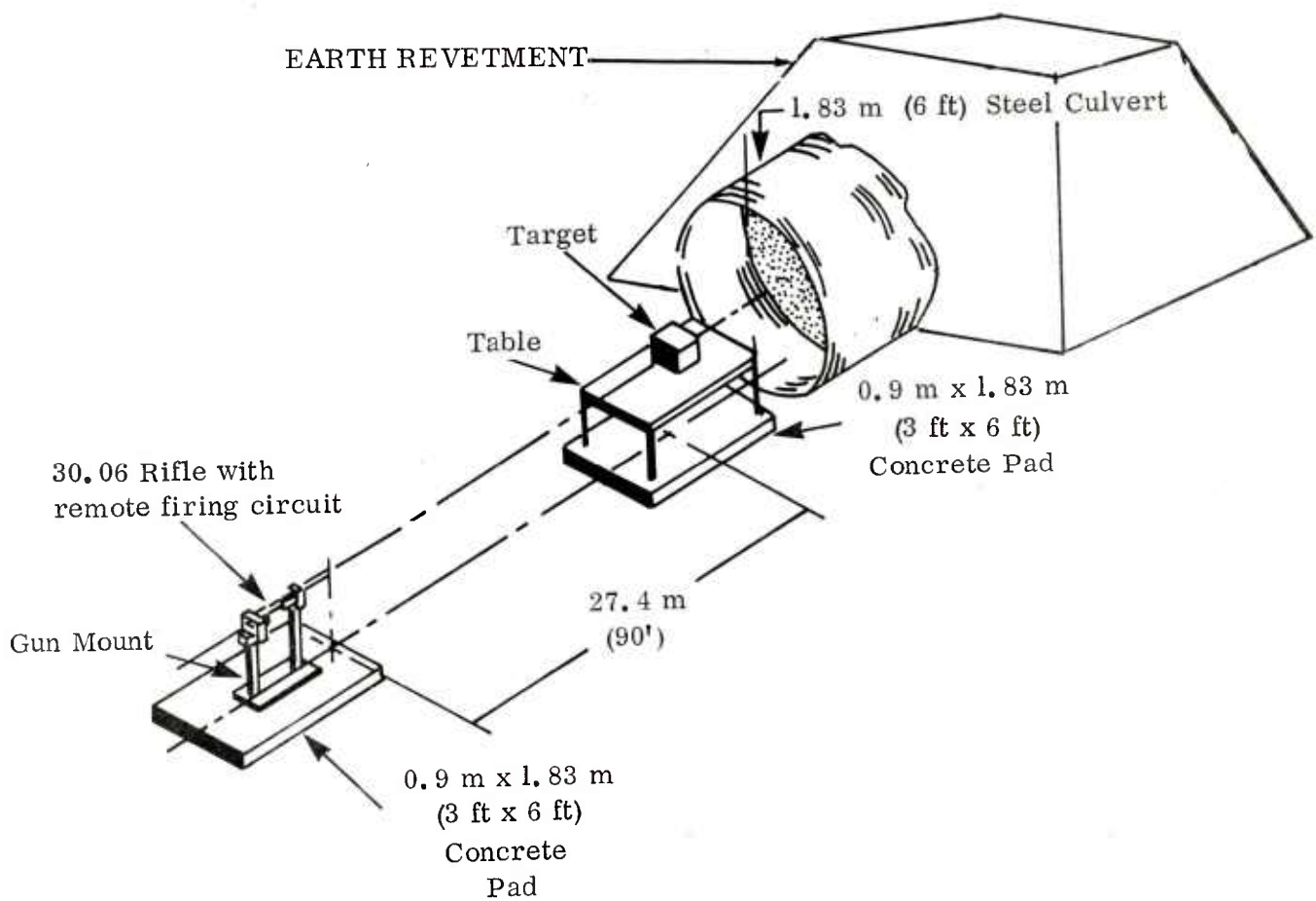

Figure 63. Typical Bullet Impact Test Set Up

Rough handling tests (drop test and vibration tests) may also be conducted on munitions shipping containers. The purpose of these tests is to determine if a reaction will occur during worst-case handling and use. Drop tests consist of dropping the shipping container from a predetermined height, 1.52 and 12.2 m (5 and 40 ft) on a specified surface. Documentation includes outer package damage and/or initiation. The test is usually conducted more than once for statistical validity. Vibration tests are conducted to determine functioning, appearence, and breakup. The munitions package is subjected to vibration at various frequencies for extended periods of time. Data are obtained on function or failure to function due to breakup.

Other tests conducted on munitions to fit particular situations or particular criteria for acceptance are beyond the scope of this report.

DATA DISCUSSION

Detonation test A results are shown in table 63, detonation test B in table 64, modified detonation test B in table 65, and external heat test C in table 66. Bullet impact results are given in table 67.

Detonation Test A

The majority of the munitions tested caused outside damage to the shipping container; that is, the package sustained irreparable damage, not just the lid being raised by the reaction. Damage was greatest when the donor contained some form of explusion charge. The damage was caused by the expulsion charge more often than by the functioning of the donor. Such damage occurred in 65% of the materials tested. The greatest damage was from the illuminants munitions. In the case of the smoke munitions, CS, the packing container burned rather than being ruptured by the explusion charge. Intrapropagation occurred in 47% of the test articles; again this was caused in the majority of cases by thermal ignition of an acceptor item by the burning smoke. Of those items that had an expulsion charge, intrapropagation occurred in 1 of 5. The expulsion charge kicked the donor out of the shipping container, making thermal ignition of an acceptor round unlikely. When the single shipping container is confined on all sides as outlined in NATL STANG 4123, it is apparent that intrapropagation is more likely for those end item stores that have an expulsion charge. Only two of the 23 end item munitions tested in this configuration had any measurable blast overpressure. The M80 firecracker only mass detonated the donor M112A1 photoflash cartridge. Pressure values of 33 kPa (4.8 psi) were recorded at a radius of 9.14 m (30 ft) from the donor, and in the case of the single M112A1, 9.17 kPa (1.33 psi) was recorded at 8.23 m (27 ft) from the donor reaction. The illuminant munition was found to have the greatest fragmentation. Again, this was primarily due to the expulsion charge.

Detonation Test B

These tests were conducted on the sample in which intrapropagation within the container resulted in the detonation test A configuration. In all but two of these cases there was outside damage to both the donor and acceptor shipping container. Most of the damage was the result of expulsion charges. In the case of the smoke munitions, fire was the hazard and burning of the munition usually resulted in kindling of the packing container. There were no frag-

TABLE 63. SUMMARY OF DETONATION TEST A

Sample designation	Outside packaging container damage	Propagation	Blast overpressure	Number fragment	Max distance m (ft)
Fuze, hand grenade, XM227E1	No	No	0	0	0
Canister, smoke, yellow, 105mm, M2	Yes	Yes	0	0	0
Grenade, hand, smoke, AN-M8	Yes	Yes	0	0	0
Grenade, hand, smoke, violet, M18	No	No	0	0	0
Grenade, hand, smoke, yellow, M18	No	No	0	0	0
Grenade, hand, smoke, green, M18	No	No	0	0	0
Signal, illumination, aircraft single star red, AN-M43A2	No	No	0	0	0
Simulator, projectile air burst, M74A1	Yes	No	0	27	40.5 (133)
Simulator, detonation, explosion, M80	Yes	Yes	4.8 psi 30 ft radius	800	97.5 (320)
Cartridge, 60 mm, illumination, M83A3	Yes	No	0	6	33.8 (111)
Cartridge, photoflash, M112A1 (1 sec delay)	Yes	No	1.33 psi 27 ft	39	76.2 (250)
Signal, illumination, ground, white star parachute, M127A1	Yes	Yes	0	19	30.5 (100)
Launcher, grenade, smoke HC-M276	Yes	No	0	2	12.5 (41)
Canister, smoke, HC, 155 mm M1	Yes	Yes	0	0	0
Mortar, riot, CS, 4.2", XM629	Yes	Yes	0	0	119 (390)
Canister, smoke, yellow, 155 mm, M3	Yes	Yes	0	0	0
Fuze, hand, grenade 3-5 sec M201A1	No	No	0	0	0
Grenade, hand, WP, M34	Yes	Yes	0	4	19 (63)
Grenade, hand, riot, CS, M7A3	Yes	No	0	0	0
Grenade, hand, riot, CS, XM47E3	No	No	0	0	0
Canister, 4.2", CS XM-9 48/case	Yes	Yes	0	0	0
Canister, 4.2", CS XM-9 500/case	Yes	Yes	0	0	0
Fuze, M281	No	Yes	0	0	0
Grenade, hand, incendiary M14	Yes	Yes	0	0	0
Grenade, hand, smoke red M18	No	No	0	0	0
Canister, smoke, HC, 105 mm M1	Yes	Yes	0	0	0

ments, as the cannisters of grenades burned in place. In the tests of the 105 mm, M1, HC white smoke, cannister, it was possible to prevent interpropagation between containers by simply placing aluminum foil barriers in the donor container between layers of canisters

TABLE 64. SUMMARY OF DETONATION TEST B

Sample designation	Outside packaging container damage	Propa-gation	Blast over pressure	Number frag-ment	Max distance m (ft)
Signal, illumination, aircraft, single, star, red, AN-M43A2	No	No	0	0	0
Simulator, projectile, air burst, M74A1	Yes	No	0	27	40.5 (133)
Simulator, detonation, explosive M80	Yes	Yes	11.8 psi 15 ft rad.	76	30.5 (100)
Cartridge, 60 mm, illumination, M83A3	Yes	No	0	4	29.3 (96)
Cartridge, photoflash, M112A1 (1 sec delay)	Yes	No	2.4 psi 15 ft rad.	58	97.5 (320)
Signal, illumination, ground, white, star, parachute, M127A1	Yes	Yes	0	69	68.6 (225)
Launcher, grenade, smoke, HC-M226	Yes	No	0	0	0
Canister, smoke, white, 105 mm, M1	Yes	Yes	0	0	0
Canister, smoke, yellow, 155 mm, M3	Yes	Yes	0	0	0
Canister, smoke, yellow, 105 mm, M2	Yes	Yes	0	0	0
Grenade, hand, incendiary, M14	Yes	Yes	0	0	0
Canister, 4.2", CS, XM-9	Yes	Yes	0	27	30.5 (100)
Grenade, hand, WP, M34	Yes	Yes	0	5	16.1 (53)
Fuze, M281	No	No	0	0	0
Mortar, riot, CS, 4.2", XM629	Yes	No	0	4	112.5 (369)
Grenade, hand, smoke AN-M8	No	No	0	0	0

and a layer of foil between the two shipping containers. Generally, the smoke munition burned in place and produced no fragments. Whatever reaction occurred was thermal, as no blast overpressure measurements were obtained. Fragments were usually found in a 360°C pattern and the distance rarely exceeded 122 m (400 ft). Generally, if the munition intrapropagated within the container in the detonation test A configuration, the results in the B configuration were similar. Again it should be emphasized that confinement was minimal (that afforded by the shipping container) and results could be more severe under the new proposed methods of the revised TB700-2.

TABLE 65. MODIFIED DETONATION TEST B RESULTS

Test item	Packing container damage	Propagation	Number of fragments	Max distance m (ft)
Cartridge, 60 mm illumination M83A3	Yes	Yes	47	57.9 (190)
Grenade, hand, smoke, AN-M8	Yes	Yes	0	0
Launcher, grenade, smoke, HGM226	Yes	No	2	10.4 (34)
Mortar, riot, CS, 4.2", XM629	Yes	No	3	56.7 (186)

Only the M80 firecracker mass detonated in the B configuration, and both acceptor and donor shipping container detonated. However, in several of the tests, the number of fragments indicated a chain type reaction of reports rather than a single report. Blast overpressure value of 81.4 kPa (11.8 psi) was measured at 4.6 m (15 ft) from the donor/acceptor charge. The M112A1 photoflash failed to interpropagate, but blast overpressure from the donor charge measured 16.5 kPa (2.4 psi) at 4.6 m (15 ft).

Modified detonation test B was conducted on four munitions. The M83A3 60 mm illuminating cartridge and the AN-M8 HC smoke grenade had both failed to propagate between shipping containers in the standard detonation test B configuration. When these munitions were tested in the modified configuration (additional confinement) it was noted that propagation occurred and that the number of fragments and distances were greater. The opposite is noted for the XM629 and the HC M226 grenade launcher. These end items failed to propagate with additional confinement. Results from these tests were minimal, and clear evidence that additional confinement causes greater damage has yet to emerge.

External Heat Test C

In every case, the munitions functioned as the result of a sustained fire. The average time to initiation of the munition in the shipping container was approximately 12 minutes from initiation of the pyre. The time varied with the type of packaging. Items that were single wrapped took longer to ignite than those that were packaged loose. Cardboard containers ignited more rapidly than wooden boxes. Fragmentation dispersion was dependent

TABLE 66. EXTERNAL HEAT TEST C RESULTS

	Explosion	Fragments	Maximum fragment distance m (ft)	Burn time min
Grenade, hand, smoke, green, M18	No	No	0	47
Grenade, hand, smoke, red, M18	No	Yes		35
Grenade, hand, smoke, yellow, M18	No	No	0	58
Grenade, hand, smoke, violet, M18	No	Yes	7.9 (26)	31
Grenade, hand, smoke, AN-M8	No	No	0	47
Canister, smoke, yellow, 155 mm, M3	No	Yes	29.6 (97)	11.05
Grenade, hand, incendiary, M14	No	No	0	22.3
Grenade, hand, WP, M34	Yes	Yes	39 (128)	6.08
Grenade, hand, riot, CS, M7A3	No	No	0	22
Grenade, hand, riot, CS, XM47E3	No	No	0	18
Cartridge, 60 mm, illuminating, M83A3	No	Yes	108.2 (355)	31
Signal, illumination, aircraft, single, star, red, AN-M43A2	No	Yes	49.4 (162)	21.75
Simulator, projectile, air burst, M74A1	No	Yes	49.4 (162)	20
Cartridge, photoflash, M112A1 (1 sec delay)		Yes	54.9 (180)	8
Signal, illumination, ground, white, star, parachute, M127A1	No	Yes	140.2 (460)	32
Simulator, detonation, explosive, M80	Yes	Yes	60.96 (200)	30
Canister, smoke, HC, 105 mm, M1	No	Yes	20.7 (68)	13.5
Fuze, hand, grenade, 3-5 sec, M201A1	No	No	0	9.3
Fuze, hand, grenande, XM227E1	No	No	0	16
Launcher, grenade, smoke, HC-M226	No	No	0	9.5
Mortar, riot, CS, 4.2", XM629	No	Yes	274.3 (900)	55
Fuze, M281	No	No	0	11.6
Canister, smoke, yellow, 105 mm, M2	No	Yes	15.8 (52)	24.8
Canister, 4.2", CS, XM-9 48/case	No	Yes	64 (210)	17
Canister, 4.2", CS, XM-9 500/case	No	Yes	8.5 (28)	11.6
Canister, smoke, HC, 155 mm, M1	No	Yes	14.3 (47)	2.1

upon the type of item being tested. The illuminating munition and the M80 firecrackers generally exhibited the greatest fragmentation. The XM629 CS 105 mm mortar round with expulsion charge threw fragments the greatest distance. Of all of the end items tested, only the M80 firecracker resulted in an explosion. When the explosion occurred, only 3 of the 4 boxes exploded immediately and the contents of the fourth box went off individually for approximately 45 minutes. The explosion of the other three boxes extinguished the pyre.

External heat test C gives a good approximation of what might occur as the result of an accident during transportation of the munition. In almost every case, if the heat stimulus could be removed within 8 to 12 minutes of its start, the hazard involved might be minimized. On the other hand, if it were impossible to extinguish the fire in this time frame, the hazard potential could become greater than these tests indicate. The hazard potential increases with the quantity of material and the degree of confinement. Still, this test provides a realistic approximation of what might be expected to happen.

Simulation Tests

In conjunction with the standard end item munition tests, and as the result of the 48/case and 500/case XM-9 CS cannister tests, over-the-road scaled simulation tests were conducted. Lasseigne[31] designed a 1/50 scale volume and included a 1/50 scale by cubic volume or simulated full trailer load. A centrally located munition was initiated and pressure and temperature measurements were monitored. In the first two tests only the donor shipping container burned, there was no propagation, and the physical structure did not fail. The total reaction was contained within the structure. Pressure measurement and temperature measurements were 82.7 kPa (12 psi) and 454° C (850° F) respectively.

Additional tests were conducted using the 500 canisters/case configuration in a 1/80 scale trailer of similar design and material; the results were significantly different. The trailer ruptured, the wooden interior burned, and the aluminum exterior burned and melted. Maximum pressures were 96.5 kPa (14 psi) and the maximum temperature reached 749° C (1380° F). It was surmised that the difference in the method of packing a wooden box with 48 canisters/case versus the wirebound pallet with 500 canisters/case was the significant difference that caused the rupture.

Rail car simulation tests were conducted by Duhon, Lasseigne, and McKown[32] using an illuminant, M127A1 parachute flare. In this instance the emphasis was placed on percentage of voids. The results were very significant and are shown in table 67.

TABLE 67. RAIL CAR SIMULATION TEST SUMMARY OF RESULTS

Ullage void	Panel blowout	Internal temp.	Propagation	Duration
45% void	2 hrs	482°C (900°F)	2 hrs	4.5 hrs
64% void	5 sec	982°C (1800°F)	5 min	2 hrs

Conclusions from these tests indicate that the oxygen available with the greater ullage s a significant factor in increasing the reaction rate. In any event, there were no explosions in either configuration. The data gained from all of the simulation tests were significant in that they provide insight as to what may be expected on a larger scale. As was assumed from the outset of these experiments, exact scaling in which the metal structures would fail as they would at full size could not be achieved. Rather, the tests were designed to provide valuable insight as to the types of reaction to be expected. Such information is of paramount importance in evaluation and classification of pyrotechnics for various modes of transportation.

Bullet Impact

The results of these tests are shown in table 68. Varied results were obtained by firing into the target container and striking various component parts of the munition. Examples

TABLE 68. BULLET IMPACT TEST SUMMARY

Test item	Test Results (1)		Blast overpressure	Number of fragments	Dist.
	Single	Multiple			
Signal, illumination, aircraft, single, star, red, AN-M43A2	1/5	3/5	None	None	0
Simulator, projectile, air burst, M74A1	5/5	N/A	None	100	30.5 (100)
Simulator, detonation, explosion, M80	4/4	N/A	20.07 psig 15 ft. Rad.	100	30.5 (100)
Cartridge, 60 mm, illuminating, M83A3	0/5	3/5	None	None	0
Cartridge, photoflash, M112A1 (1 sec delay)	4/4	N/A	None	300	91.4 (300)
Signal, illumination, ground, white, star, parachute, M127A1	4/5	N/A	None	230	70.1 (230)

(1) Indicates number of times propagation occurred out of five tests.

included the bullet striking the illuminant mixture versus the expulsion charge. When the mixture was struck, burning was the result, and when the expulsion charge was struck, the

container ruptured and burning may or may not have occurred. If an inert component was struck, there was no reaction. The M80 firecracker exhibited characteristics of mass detonation. The recorded blast overpressure measured 138 kPa (20 psi) at a radius of 4.6 m (15 ft) and was higher than in the standard end item. The number and type of reactions, mass detonating, propagation, and fragmentation dispersion of the bullet-impacted end items, were similar to the standard end item classification tests. The multiple test showed a greater tendency to propagate within the container than the singly impacted round.

SUMMARY

Standard end item munition tests are conducted to determine classification and compatability of a given munition. In all cases, detonation test A and the external heat test C must be conducted. If there is intrapropagation or damage to the outside shipping container, then detonation test B is conducted. If no propagation results in this configuration, then depending upon the results of heat test C, an end is classified as either mass detonating, DoD Class 1.1, or fire hazard only DoD Class 1.3. Over-the-road transportation and rail car simulation tests give additional indications of what may be expected under more realistic conditions. The results of the bullet impact test indicate the same general trend as the standard classification tests.

Results vary with each type of end item. Additional factors, including the type of packaging, have an influence upon the results. It was shown in the case of the 105 mm HC smoke cannisters that it was possible to alter the reaction by placing a simple barrier between layers of the canisters. The use of individual packaging within the container prevents propagation, and in the case of heat test C, initiation occurs much more slowly. Wilcox [33] developed a method of packaging black powder that reduced the potential of an explosion by employing new techniques of venting and light-weight, inexpensive barriers. If such techniques were used in the place of current packaging techniques, the potential hazards found to exist in transportation and storage could be reduced sufficiently to offset the cost of the new type packages. Emphasis should be placed upon newer methods of packaging to take advantage of the current state of the art.

MASS EFFECTS

BACKGROUND

Although pyrotechnic mixtures are not normally considered to be detonating explosives, it has been shown in previous studies[5,34] that some pyrotechnic compositions will explode under certain conditions. Primary emphasis in previous testing has been on the determination of hazardous characteristics of a given process or on development of enclosures to contain the effects of the reaction. During the course of those studies, evidence was obtained that indicated that the rate of reaction and resultant output energy can depend on details of the surroundings, such as the extent of confinement afforded by mixer and blenders, enclosures, and the geometry of the material.[40]

The results obtained from such studies became increasingly more acute with the advent of new and larger manufacturing processes, whereby, larger quantities of pyrotechnic mixtures are being processed. Studies to evaluate specific equipment and processes have been conducted for the past several years[24,35,36,37]. This is the culmination of past studies and current on-going programs associated with in-process blending. Tests were performed to investigate the following phenomena.

1. Self-confinement tests where 22.7 kg (50 lb) samples of pyrotechnic mixtures are initiated, either thermally or with a small high-explosive booster charge, were conducted to determine if a detonation would result.

2. Thermal ignition tests on 226.7 kg (500 lb), 454 kg (1,000 lb) and 984.3 kg (2,170 lb) quantities of colored smoke were conducted to determine if critical diameter parameters are exceeded in process configurations.

3. Detonation susceptibility investigations (mass effects tests) were conducted to determine the response of colored smokes to shock initiation.

TEST SET UP

Self-Confinement Tests

Two series of tests were performed on two pyrotechnic mixtures currently in production (22.7 kg (50 lb) quantities of Violet Smoke Mixture IV and an illuminant mixture with a formulation of (45/55) percent of magnesium-sodium nitrate). The mixtures were placed in a 0.02832 m^3 (1 ft^3) plywood box. The lid to the container was left off. Each mixture was first initiated thermally using a 0.227 kg (0.5 lb) quantity of UTC3001 propellant as a booster and an Atlas match assembly as the ignition source. The second test in each series was boosted by a 0.227 kg (0.5 lb) quantity of composition C-4 and initiated by a J-2 engineers' special blasting cap. Figure 64 shows the typical test set up of the test fixture and sample material.

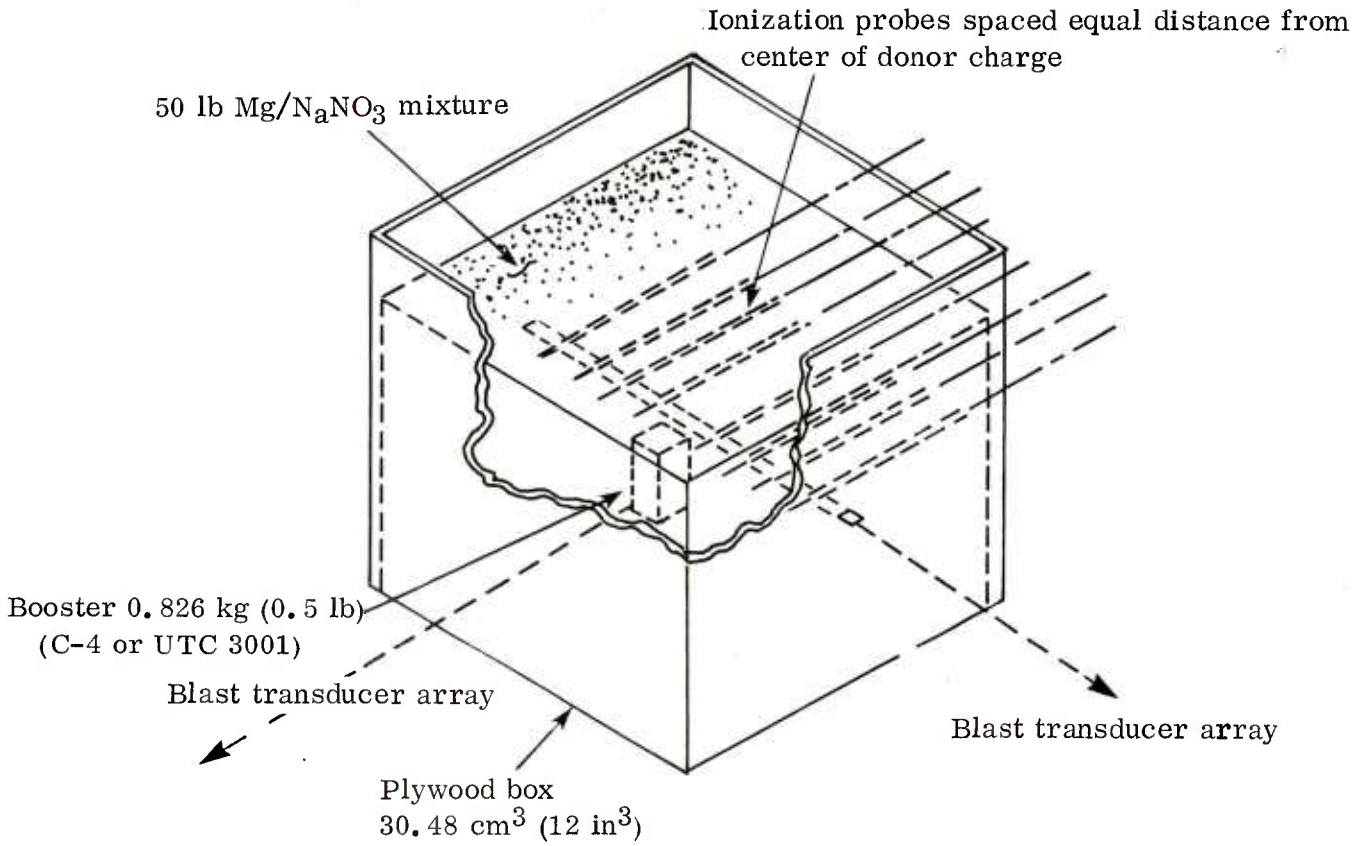

Figure 64. Test Set Up of Self-Confinement Test Showing Placement of Internal Velocity Measurement Devices and Placement of the Booster Charge.

Capacitive discharge ionization probes were placed inside the material at equal distances from the booster charge and sides of the box to determine whether the reaction front velocity increases within the material as the reaction proceeds, and whether extrapolation of these rate measurements indicate the exceeding of critical mass. Blast overpressure transducers were placed in a 180° array to measure blast overpressure due to material detonation.

The results of these tests are tabulated for comparison in tables 69 and 70. The results of two thermally initiated tests were significantly different from the explosive-initiated tests. The burning rate for the thermally ignited illuminant mixture was 45.7 m per second (150 ft per second). The burning rate for the thermally ignited violet smoke mixture was 3 m per second (10/ft/sec). By contrast, the burn rate for the explosive-ignited illuminant mixture was 1,372 m/sec (4,500 ft/sec) and for the violet smoke mixture was 26 m/sec

TABLE 69. DATA SUMMARY OF 22.6 kg (50 lb) OF ILLUMINANT AND VIOLET SMOKE MIXTURES

Initiation method	Illuminant mixture			Violet smoke mixture		
	Burning rate m/sec (ft/sec)	Fireball diameter m(ft)	Detonation	Burning rate m/sec (ft/sec)	Fireball diameter m(ft)	Detonation
Thermally ignited	45.7 (150)	12.2 (40)	No	3 (10)	No observable fireball	No
Explosively ignited	1372 (4500)	13.7 (45)	Yes	26 (86)	No observable fireball	No

(86 ft/sec). There was no measurable blast overpressure from either of the thermally ignited pyrotechnic mixtures or the explosive-ignited violet smoke mixture. There was a measurable blast overpressure produced by the illuminant mixture. The values varied from 102.7 kPa (14.9 psi) at a scaled distance of 2.15 m/kg$^{1/3}$ (5.43 ft/lb$^{1/3}$) to 42.8 kPa (6.2 psi) at a scaled distance of 3.45 m/kg$^{1/3}$ (8.69 ft/lb$^{1/3}$). Comparison of fireball diameter and duration for the thermal versus explosive-ignited shows that there were minimal differences as to size for the illuminant mixture. There was significant difference in growth rates. There was no observable fireball from either the thermal or explosive-ignited violet smoke.

TABLE 70. BLAST OVERPRESSURE OF 22.6 kg (50 lb) OF ILLUMINANT AND VIOLET SMOKE MIXTURES BOOSTED BY .226 kg (0.5 lb) COMPOSITION C-4

Channel numbers	Scaled distance m/kg$^{1/3}$ (ft/lbs$^{1/3}$)	Expected pressure kPa (psi)	Illuminant mixture		Violet smoke mixture	
			Measured pressure kPa (psi)	High explosive equivalency %	Measured pressure kPa (psi)	High explosive equivalency %
1, 5	2.15 (5.43)	191.7 (27.81)	102.7 ± 3.5 (14.9 ± 0.5)	43.9	-0-	-0-
2, 4	2.58 (6.51)	126.04 (18.28)	73.1 ± 4.1 (10.6 ± 0.6)	46.3	-0-	-0-
3, 6	3.01 (7.60)	90.2 (13.08)	59.3 ± 4.1 (8.6 ± 0.6	53.6	-0-	-0-
4. 8	3.45 (8.69)	68.3 (9.90)	42.8 ± 1.4 (6.2 ± 0.2)	47.9	-0-	-0-

Thermal Ignition Tests

These tests were conducted on HC white smoke and violet smoke mixture in 226.7 kg (500 lb), 454 kg (1,000 lb) and 984 kg (2,170 lb) quantities in two separate configurations. Figure 65 (a and b) shows the typical test configurations. In the initial configurations, violet and HC white smoke were placed in a steel cylinder 57 cm (22-1/2 in) diameter by 85 cm (33-1/2 in) height. The cylinder was capped with a lid that had two vents, each having an area of 81 cm^2 (12.56 in^2). Two booster charges consisting of 15 grams of UTC3001 propellant charges were placed at the bottom and ignited by two Atlas electric match assemblies. This test was conducted three times for each sample material. Observations were made to determine internal static pressures, occurrence of detonation, and burning time.

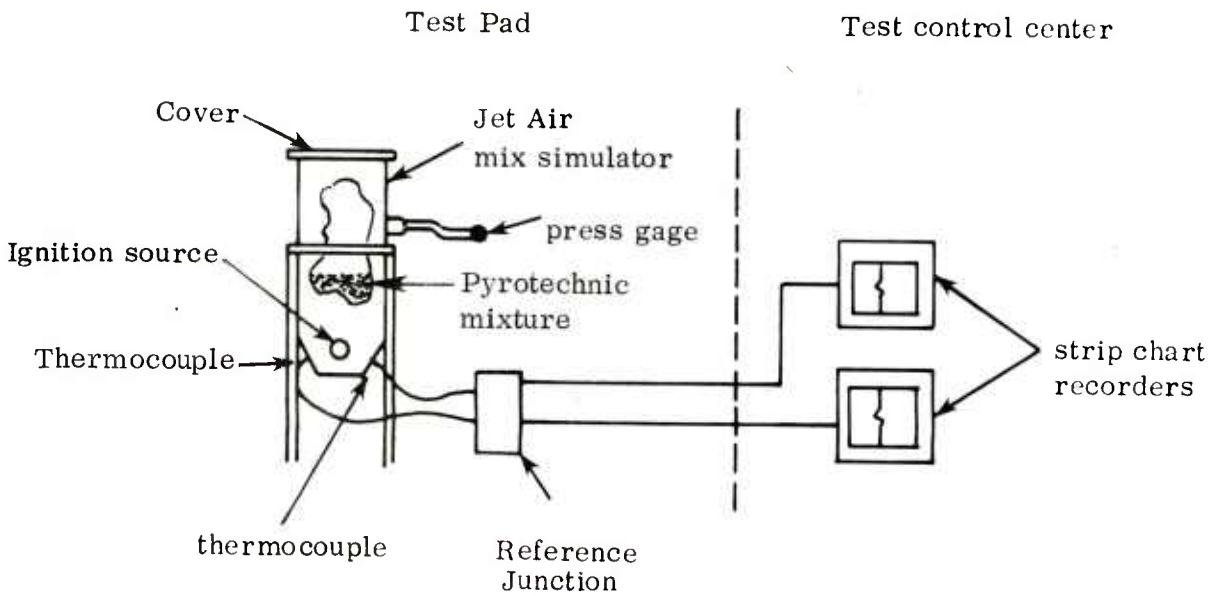

Figure 65. Typical Test Configuration for Thermal Ignition of 226.7 kg (500 Pound), 454 kg (1,000 Pound) and 984 kg (2,170 Pound) Quantities of Violet Smoke and HC White Smoke.

The second series of three thermal ignition tests were conducted in a Jet Airmix blender. The first, 454 kg (1,000 lb) of violet smoke was placed in a 1 m^3 (39.37 ft^3) working capacity blender and a 3 g (.105 oz) booster charge of UTC 3001 propellant was initiated by an Atlas electric match assembly while the mixer was in a static state (when the mixer was not being pulsed pneumatically). A second test was conducted using the same quantity of violet smoke ignited in the same manner while the mixer was in a dynamic state (the mixer was being pulsed pneumatically). A third test was conducted using 984 kg (2,170 lb) of HC white smoke static state. All three tests were conducted to determine if mass detonation or pneumatic rupture of mixer would occur due to a single heat source initiation.

TABLE 71. RESULTS OF THERMAL IGNITION TESTS

Sample material	Weight kg (pounds)	Type reaction	Total burn time sec	Burn rate m/sec	Temp °C °F
Violet smoke	226.7 (500)	Burning	270	0.0032	816 (1500)
Violet smoke	226.7 (500)	Burning	390	0.0022	974 (1786)
Violet smoke	454 (1000)	Burning	110	0.012	154 (310)
Violet smoke	454 (1000)	Burning	175	0.0073	334 (633)
HC white smoke	264 (450)	Burning	180	0.0048	N/A
HC white smoke	204 (450)	Burning	210	0.0042	N/A
HC white smoke	984 (2170)	Burning	650	0.0020*	N/A

*Approximately 60% of material burned

The results are tabulated in table 71. Figure 66 shows the burning rate of violet smoke as a function of charge weight. As the charge weight increases, the burn rate increases. The reaction rate is rather slow; but the possibility exists that the reaction rate would increase asymptomatically so that, at some point, large enough quantities could exceed the minimum reaction rate for a detonation. Current manufacturing techniques do not exceed the suspect quantities.

Detonation Susceptibility Tests

These tests were performed to determine if mass detonation would result from initiation by a shock plane generator. In these series of tests 226.7 kg (500 lb) quantities of violet and HC white smoke were encased in a 91.5 cm (35 inch) diameter by 50.8 cm (20 in), 12-gage steel cylinder. The shock plane generator consisted of a single coiled layer of 200 gram/foot primer cord representing a total of 15.7 kg (7.14 lb) of high explosives. Carbon resistor pressure probes were placed inside the container to determine internal velocity of the reaction front. Blast instrumentation was deployed to measure side-on blast overpressure contribution due to the smoke reaction. Data from these tests were compared with data from tests performed on inert material (sand) in the same geometry. Figure 67 shows typical set up for these tests.

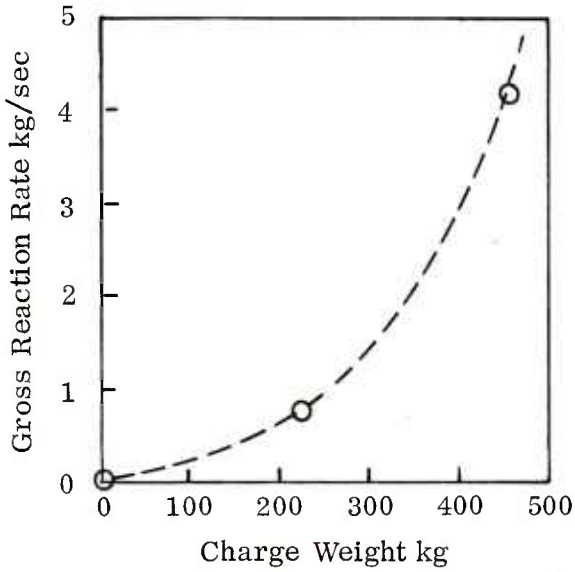

Figure 66. Reaction Rate of Violet Smoke as a Function of Charge Weight

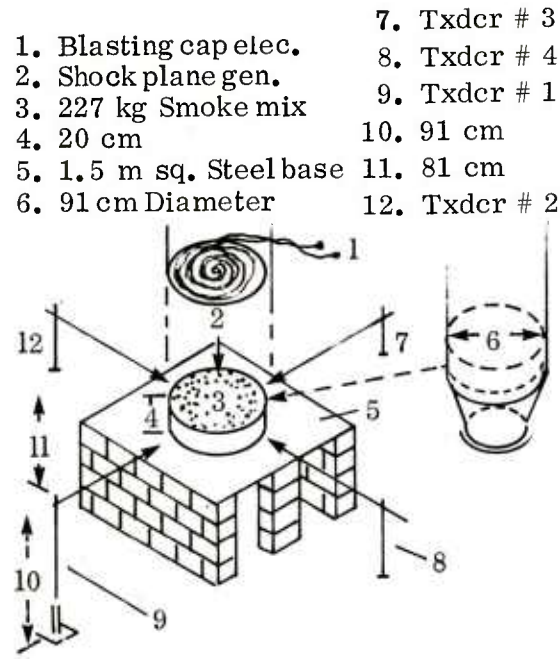

Figure 67. Typical Set Up for Detonation Susceptibility Tests

Test results are tabulated in table 72. Detonation was defined by peak side-on blast pressure and internal reaction front velocity measurements. The results show that there was no side-on pressure contribution and the reaction front velocities were significantly less than the speed of sound.

TABLE 72. MASS EFFECTS TEST RESULTS

Sample material	Material weight kg (lbs)	Expected pressure kPa (psi)	Recorded pressure kPa (psi)	Recorded velocity m/sec (ft/sec)	Mass detonation
Sand	226.7 (500)	406.8 (59)	183.4 (26.6)	286.2 (939)	No
Violet smoke	226.7 (500)	406.8 (59)	182. (26.4)	128.3 (421)	No
HC white smoke	204.1 (450)	406.8 (59)	238.9 (34.8)	154.5 (507)	No
HC white smoke	204.1 (450)	(59)	198.6 (28.8)	200.8 (659)	No
HC white smoke	204.1 (450)	406.8 (59)	195.1 (28.3)	182.9 (600)	No

SUMMARY

1) The illuminant mixture consisting of sodium nitrate and magnesium (55/45%) exhibited characteristics of a detonation with an internal reaction front velocity in excess of 1,372 m/sec (4,500 ft/sec) and a high explosive equivalency of 48% when initiated with a high explosive booster charge.

2) Thermally ignited pyrotechnic mixtures do not exhibit characteristics of detonation in a 0.3 m^3 configuration.

3) The critical diameter of violet smoke is greater than 1 m, but the burn rate was modified slightly by using a high explosive booster.

4) There was no explosive effect of any of the pyrotechnic mixtures tested when they were subjected to a strong stimulus of a shock plane generator.

5) The burning rate for violet smoke is the function of charge weight. As the charge weight increases, the burning rate increases.

MIXING/BLENDING

BACKGROUND

Pyrotechnic mixtures are usually blended by one of two methods: wet or dry. Dry blending is accomplished in a tumble device such as a ball mill, double-cone blender, a Vee blender, a motionless mixer, or a pneumatic mixer. Wet blending is accomplished in various types of mixers that range from dough type planetary blenders to highly complex liquid mixing systems. Wet blending is accomplished by adding a volatile liquid carrier to the mixture to form a paste-like substance or, as in some cases, as much as 50% by weight to form a highly viscous mixture.

Blending in general is performed in small batches ranging from several hundred grams to a maximum of 45.4 kg (100 lb) depending upon the type of mixture and the quantity required. For most blending processes, the 45.4 kg (100 lb) limit is imposed because all pyrotechnic mixtures are considered to be a DoD Class 1.1 during blending, granulating, drying, and loading operations. Only after consolidation can pyrotechnic mixtures be considered to be less sensitive, or DoD Class 1.3 when appropriate test data indicates.

Problems associated with blending are many, ranging from agglomeration of constituents to stratification and incomplete mixture. Generally, the oxidizers are hygroscopic, and in the raw form they may be chunky or in a solid block. They are milled in a hammer mill or in an attrition mill to obtain the desired particle size. So that the fuel and oxidizer do not come into intimate contact with one another, either the fuel or oxidizer may be premixed with the diluent before the final blending of all ingredients. Some of the fuels also pose problems in that they may have to be coated with an oil to make them less hazardous to use. Sieving and screening operations of all constituents are required prior to mixing, and in the case of most wet blends after drying. The mixture is broken up and screened prior to loading. If no diluent is added to the formula, then the fuel and oxidizer are carefully loaded in layers with either the fuel or oxidizer loaded first and alternate layers of constituents added. Another technique is to add constituents to the mixture at specified intervals of time during the blending cycle. The blending cycle varies from 10 minutes to an hour, with some blending operations taking longer. In all cases, blending of pyrotechnics should be performed remotely.

Dry blending is accomplished in several different types of apparatus. Regardless of the actual device, specific tasks should be accomplished prior to loading the ingredients. A simplified flow diagram depicting these steps is shown in figure 78. In almost all cases, a pyrotechnic formulation is based upon a precentage of ingredients by weight. Weighing of the constituents, while fundamental, is critical, and these percentages are often held to less than 0.5%. Milling may be accomplished in a hammer mill or an attrition mill. All ingredients are screened or sieved to meet the specified particle size, and the oxidizer and additive may be premixed. This is an important step which, besides diluting the oxidizer, prevents agglomeration from reoccurring. All ingredients are then added to the blender in a specified sequence. Dry blending is usually accomplished in approximately 30 minutes. If the blending cycle is too long, stratification or separation of the ingredients may occur, or if too short, then intimate mixture may not be obtained.

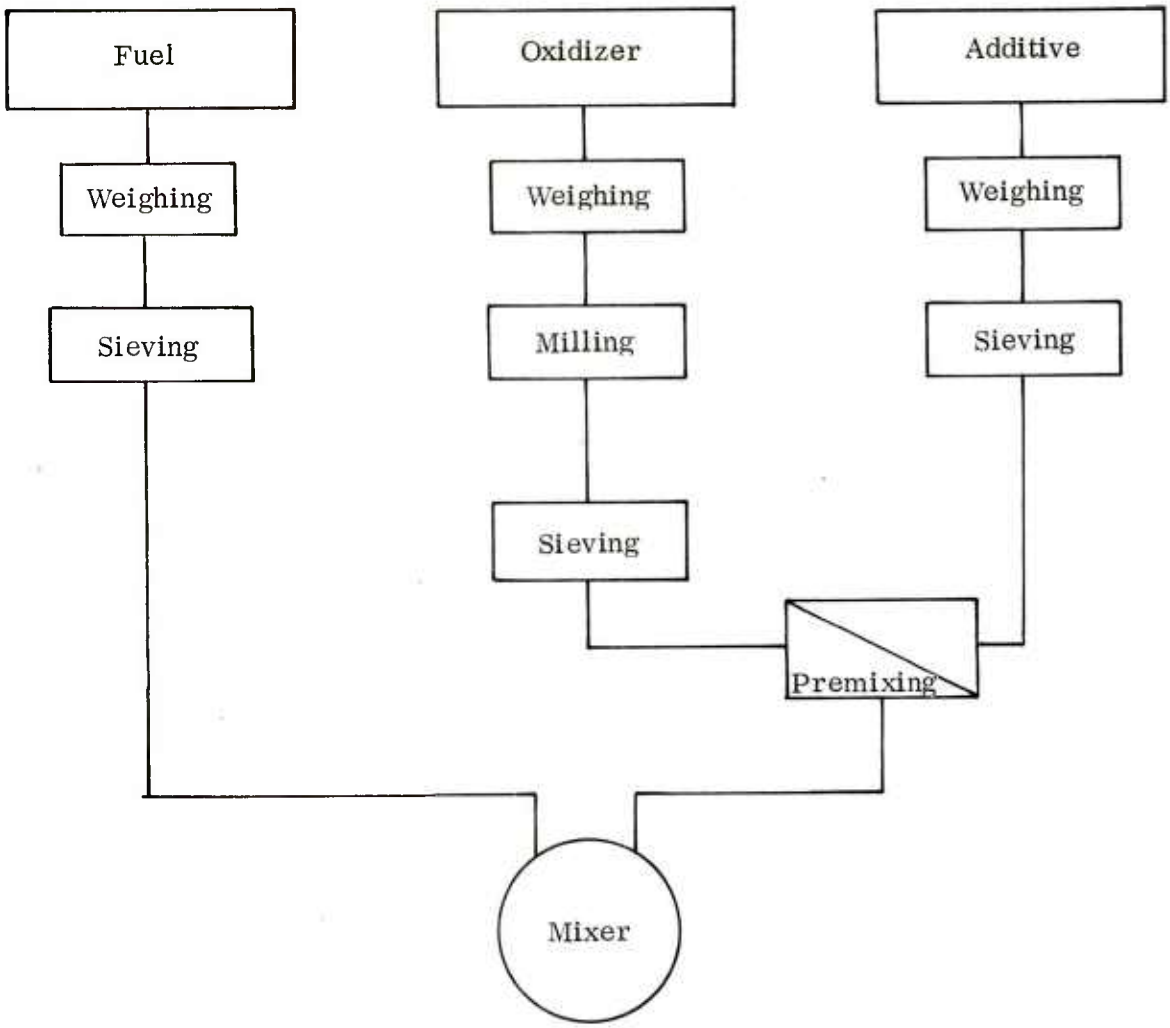

Figure 68. Simple Flow Diagram of Prepreparation for Dry Blending

Wet blending is accomplished in various types of devices where the mixture is wetted by a volatile to form a paste-like substance, or it may be wetted sufficiently to acquire the consistency of a cake dough. A planetary dough mixer or a Muller type mixer may be used. The mixing bowl and blade for the planetary mixer are made of nonsparking stainless steel; in the Muller type, all tools, mullers, and pan are also constructed of stainless steel. The weighing, sieving, and milling operations are similar for wet blending as for dry blending. The ingredients are placed in the pan or bowl and the liquid carrier is added in sufficient quantity to form a thick paste. The planetary blade and/or the mullers were previously adjusted so as not to touch the bottom or the side of the pan or bowl. The mixer is operated remotely but stopped periodically to allow for scrape down of the sides of the bowl or pan. If additional liquid is needed to maintain consistency, it is usually added at this time. The blending cycle ranges from 20 minutes to 2 hours. The mixture is then granulated by screen and the mixture is dried. It may be loaded in the granular form or broken up into smaller particle size prior to loading. A typical planetary type mixer is shown in figure 69.

More often than not, mixers were designed for other purposes than blending pyrotechnic ingredients. They were first employed in the pharmaceutical and/or food

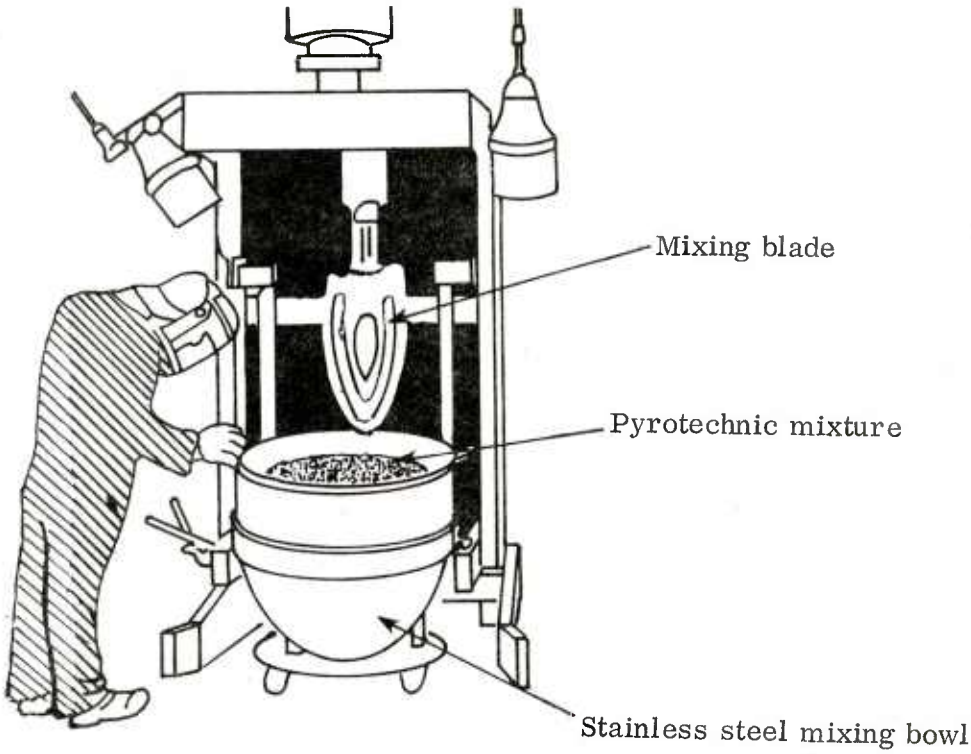

Figure 69. A Typical Hobart Planetary Dough Mixer

processing industries. The actual type of mixer employed by the manufacturer was at his own discretion as long as it met certain fundamental safety requirements cited in DoD contractors safety manual [38], and all was thought to be well as long as prudent safety practices were followed. The Muller or planetary type mixers for wet blends and double cone or ball mill mixers for dry blending have been utilized almost exclusively from the early days of manufacturing until the present. Large batch sizes are obtained by operating many mixers to blend small quantities and cross-blended to achieve an acceptable batch size for loading operations. With the advent of the arsenal modernization programs, new types of blending techniques and larger batch sizes have begun to find their way into the manufacturing process. Because of this, beginning in 1973 an extensive investigation was made of several types of mixers that utilized new technology and blended quantities up to 907 kg (2000 lb) in a single operation. The purpose of the investigation was to determine: 1) the hazards associated with large quantities; and 2) what type of mixers were available, and the problems associated with the new mixing systems.

Morris [39] performed a fault-free analysis of a proposed mixing system for HC smoke, and Lasseigne [40] undertook a study to determine electrostatic charge generation of pneumatic mixing. Nestle [41] studied process equipment phenomena and electrostatic charge generation in pnue-vac and pneumatic processing equipment to feed the new type of mixing devices. Finally, certification tests were conducted on several types of mixers and proposed blending operations.

King and Koger [42] conducted an in-plant survey of a typical manufacturing operation. From this, various worst case scenerios were developed. Small and King [43] then studied and reported on friction and impact stimuli; and McKown and McIntyre [44] conducted a

friction stimulus study on selected pyrotechnics in several blending operations to determine whether there was sufficient frictional energy available from foreign objects or metal-to-metal contact to cause initiation of various colored smokes and a red phosphorus screening smoke. The first series of tests were conducted in ball mill and a planetary dough mixer (Model N-50-6 Hobart Mixer). Finally, this screening smoke was scaled up to a full-scale mixer. Figure 70 shows the ball mill configuration and figure 71 shows the planetary mixer used in these studies.

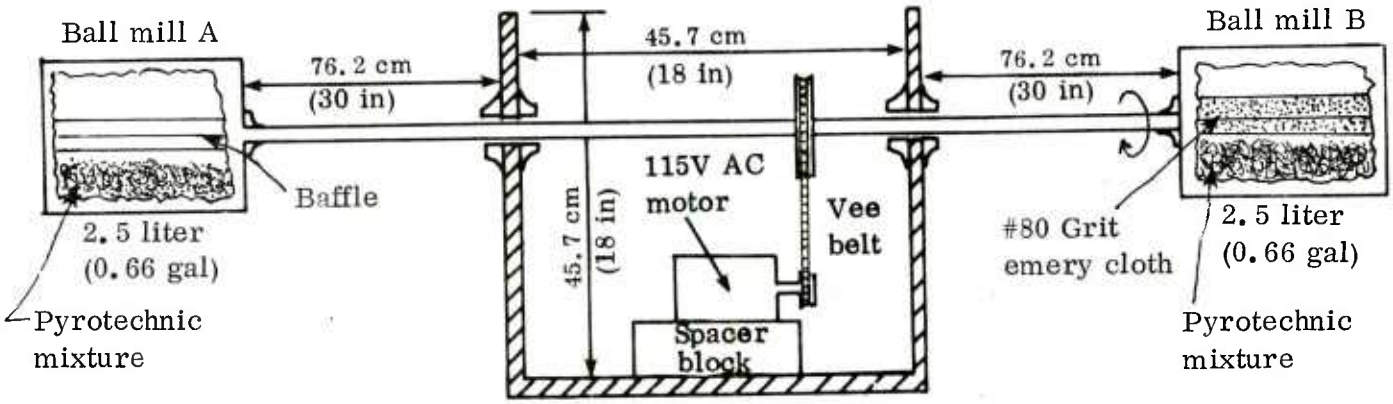

Figure 70. Tumble Mill Blender Test Configuration

The first series of experiments were conducted in a 2.5-liter (0.66-gal) light metal tumble mill specifically developed by NSTL and ERL for these tests. Three types of ball mill containers were used: (1) type A, which was a standard 2.5-liter (0.66-gal) container with smooth inside surfaces, (2) type B, which had 3.5 cm (2 in) wide by 12.7 cm (5 in)

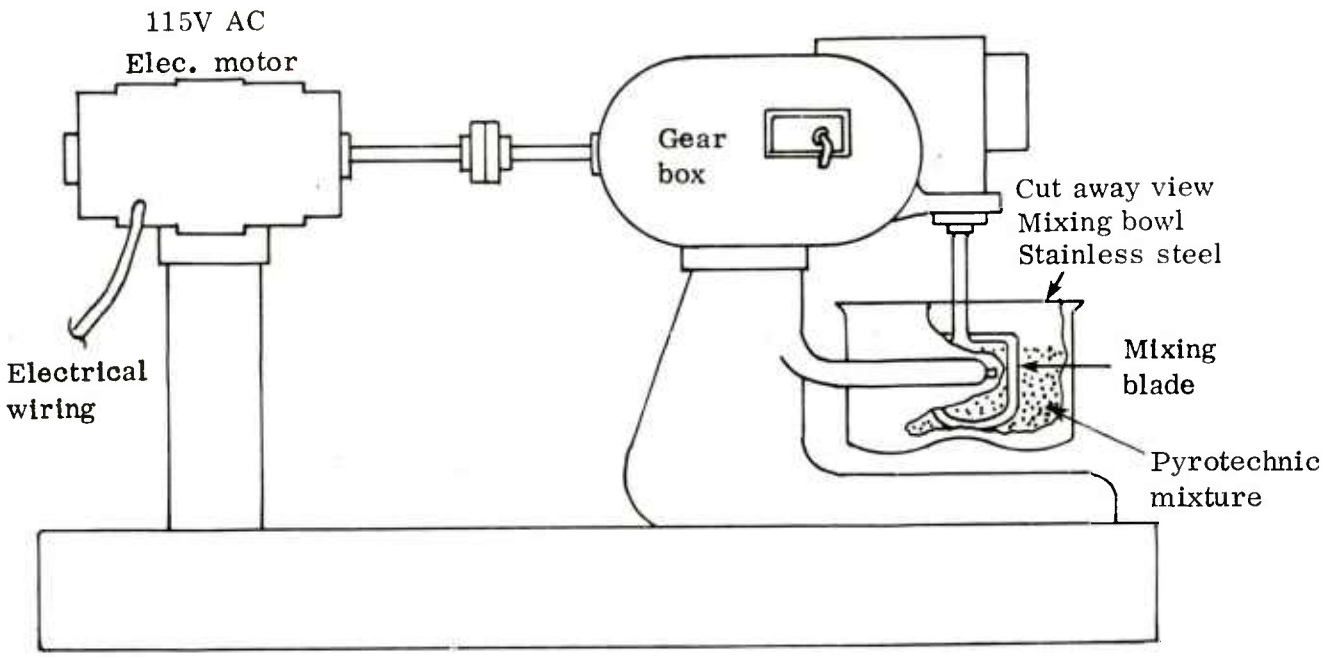

Figure 71. Model N-50-G Hobart Mixer

long strips of number 80 grit emery cloth glued to the interior of the can approximately 120 degrees apart, and (3) type C, which had two 1.9 cm by 1.9 cm (3/4 x 3/4 in) angle iron strips tack welded to the inside on opposite sides of the container. Figures 72a, b and c show the modifications to the ball mill containers.

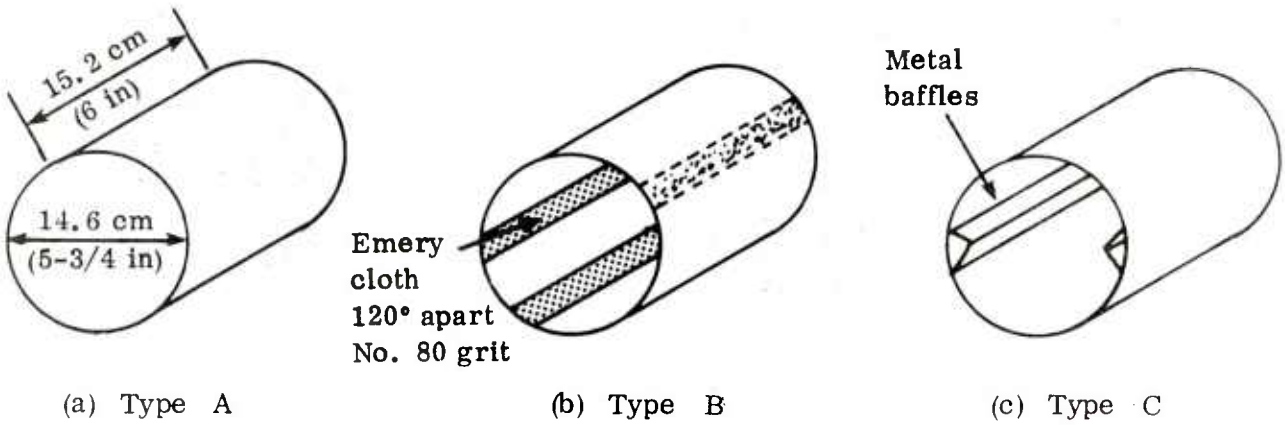

Figure 72. Ball Mill Container Configurations

Figure 73 shows the typical type of foreign objects used in these experiments. Container A had 8 to 10 various size rocks; container B had nails, drill bits, nuts and bolts; and container C had flint and small pieces of metal bar stock. The containers were then filled approximately one-half full with 500 grams of pyrotechnic constituents and tumbled for 30 minutes at 30 rpm. The ball mill was stopped and the rotation speed was reduced to 15 rpm and tumbled for an additional 30 minutes. Each pyrotechnic mixture was tested in each container for a minimum of three trials.

The second series of tests were conducted in a Model N-50-G Hobart planetary mixer. The mixing bowl was shimmed so that there was metal-to-metal contact between bowl and the mixing blade. The bowl was filled with 500 grams of pyrotechnic constituents and blended for 30 minutes. Each test was conducted a minimum of three times. Figure 71 shows the Model N-50-G Hobart Mixer.

Another area of concern found in the King, Koger study [42] was electrostatic buildups due to triboelectrification effect of moving particles. This was of great concern, particularly for the new type of mixers being certified for production facilities contemplating the use of pneumatic mixers and conveying equipment. Experiments were conducted on a double cone blender and a jet Airmix* blender in small and full-scale configurations. Electrostatic measurements were obtained on ungrounded 1-liter, 0.085 m^3 (3 ft^3), and 1 m^3 (35.5 ft^3) Airmix blenders and a 1 m^3 (35.5 ft^3) double cone mixer. Tests were conducted in the laboratory and at manufacturing plants where the system was grounded and considered operational. Similar test measurements were obtained on a fluid bed spray

* Trade name of Sprout-Waldron Company for a unit produced under a patent purchased from Grun, Lissberg, Germany.

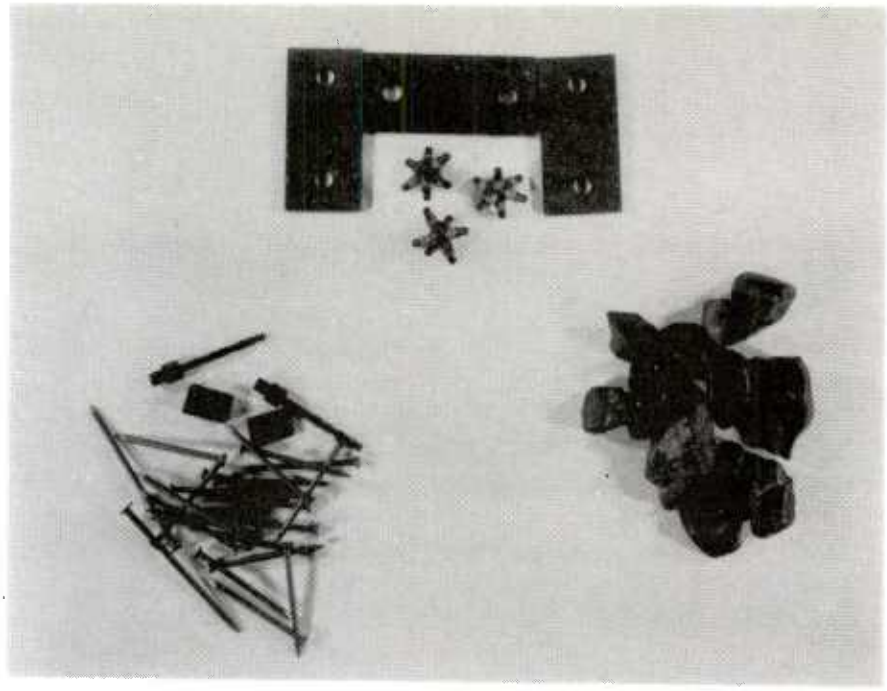

Figure 73. Typical Foreign Objects Used in Blending Experiments

granulation process in in-plant pilot model studies and full-scale production models. Figure 74 shows the 1-liter Airmix electrostatic measurement set up. Each constituent was placed in the 1-liter model and a series of measurements were obtained; then blending of several constituents such as diluent and fuel, diluent/oxidizer, dye fuel/dye oxidizer, and fuel/oxidizer were tested. The ultimate series was conducted on all complete formulations. A second series of tests were conducted in a 0.085 m^3 (1 ft^3) model.

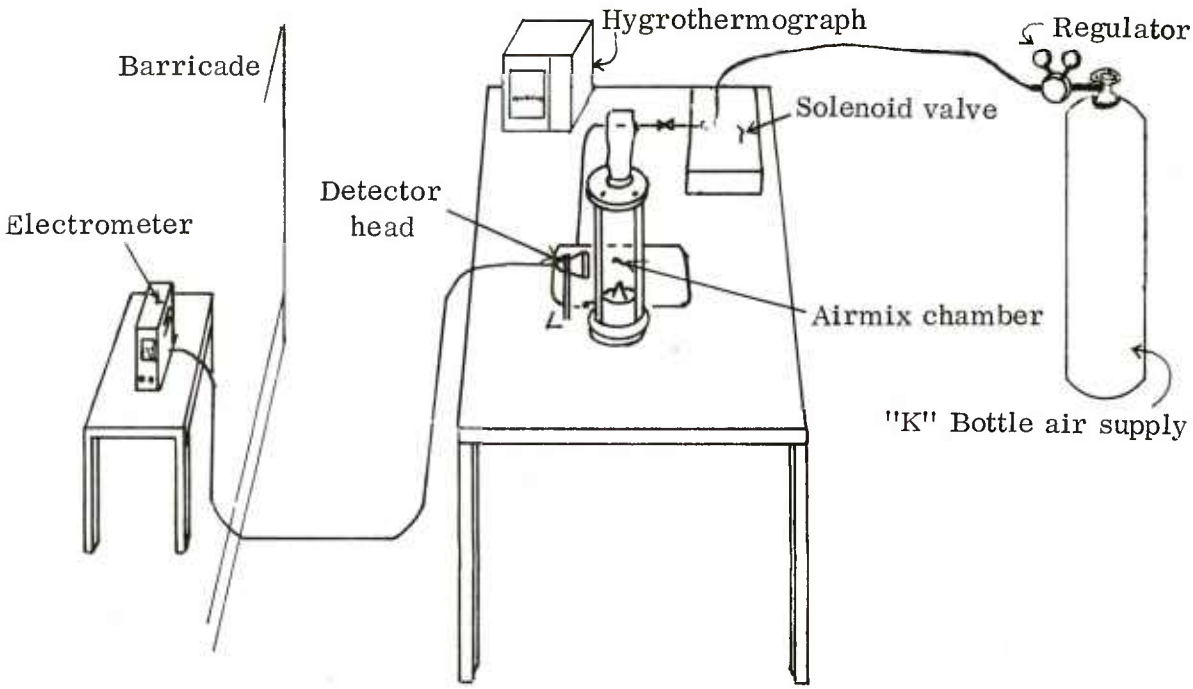

Figure 74. One-Liter Airmix Blender Set Up

Similar tests were conducted in the 1 m^3 (35 ft^3) model on 454 kg (1000 lb) quantities for colored smoke and 984 kg (2170 lb) quantities for HC white smoke. A similar series of tests were conducted on a Model 4 MacLellan Double Cone Batch Mixer. The WSG 15 and WSG 300 Fluid Bed Spray Granulation Process was used on 9.07 kg and 290 kg (20 and 640 lb) quantities respectively for colored smokes and chemical agent CS. Figure 75 shows the 1 m^3 (35 ft^3) jet Airmix test configuration. Figure 76 shows the double cone mixer configuration and figure 77 (a and b) shows the fluid bed spray granulation electrostatic measurement set up. All in all, over 3000 different electrostatic measurements were obtained on colored smokes and screening smoke in various scaled models to full-size production models. The results will be discussed later in this chapter.

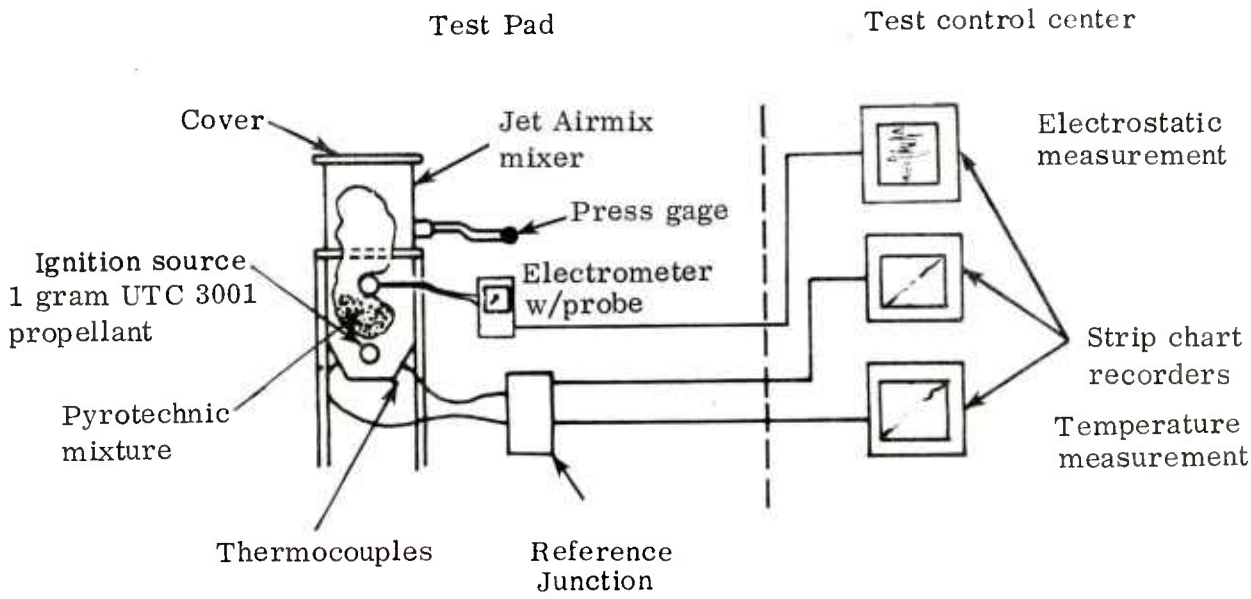

Figure 75. Test Set Up for Electrostatic Measurements and Full-Scale Thermal Initiation Test

The next series of tests conducted on these types of mixers were to determine what would result under "worst case" initiation scenarios. Jet Airmix, double cone, Hobart planetary, and the fluid bed spray granulation process were initiated thermally under dynamic blending conditions. The purpose of these tests, which were conducted as a part of certification program for blending large quantities (454 kg to 984 kg) of pyrotechnics, was to determine if the hazards associated with blending were thermal or explosive.

The final series of tests conducted on these specific types of mixers (planetary was excluded) were to find ways to reduce the potential hazards to acceptable levels. In these series of tests, the mixers were modified with rupture devices which prevented pneumatic rupture of the mixer, and possible suppression techniques that could be employed to lessen damage were investigated. Such work was performed on the jet Airmix system and the double cone mixer, as these systems were operational at a manufacturing facility. Wilcox and McIntyre [24] conducted the experiments, first on an unmodified double cone mixer and then on a modified system with rupture disc in place and with a detection and suppression system. It had been found from previous studies [36,37] that explosive venting was

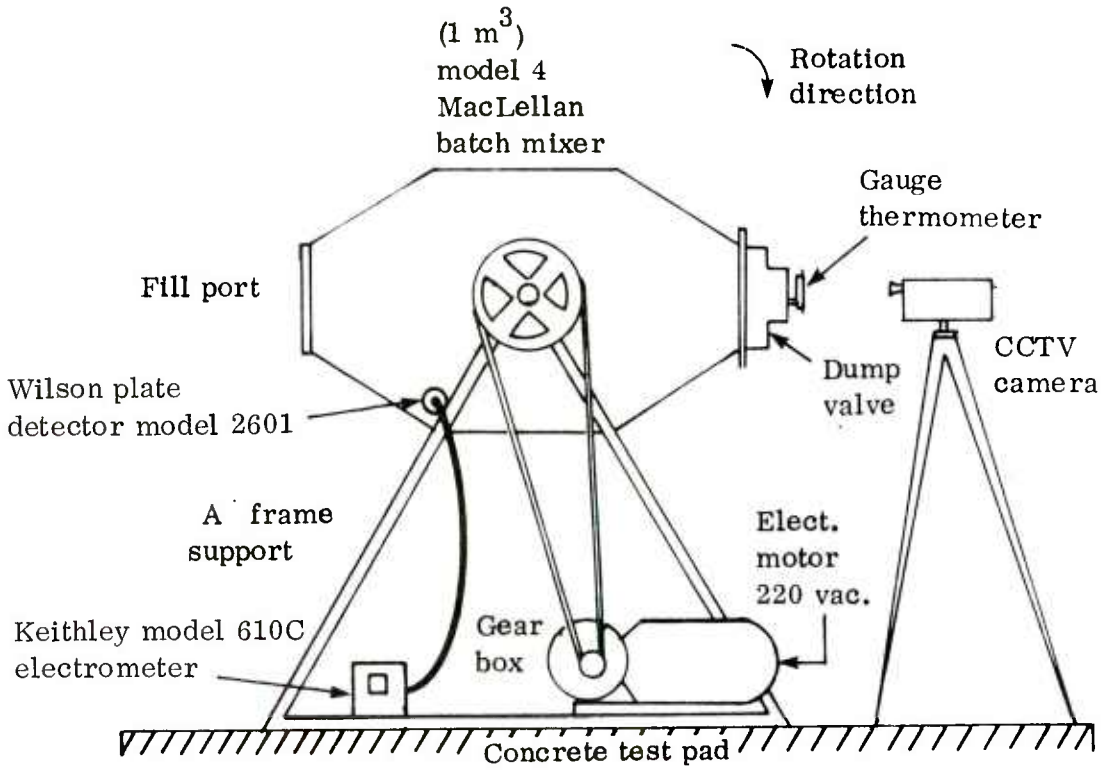

Figure 76. Electrostatic Measurement of Double Cone Blender

feasible in reducing the potential hazards, and these techniques were employed in this study. Fire suppression was limited due to the test facility location. Figure 78 shows the test set up.

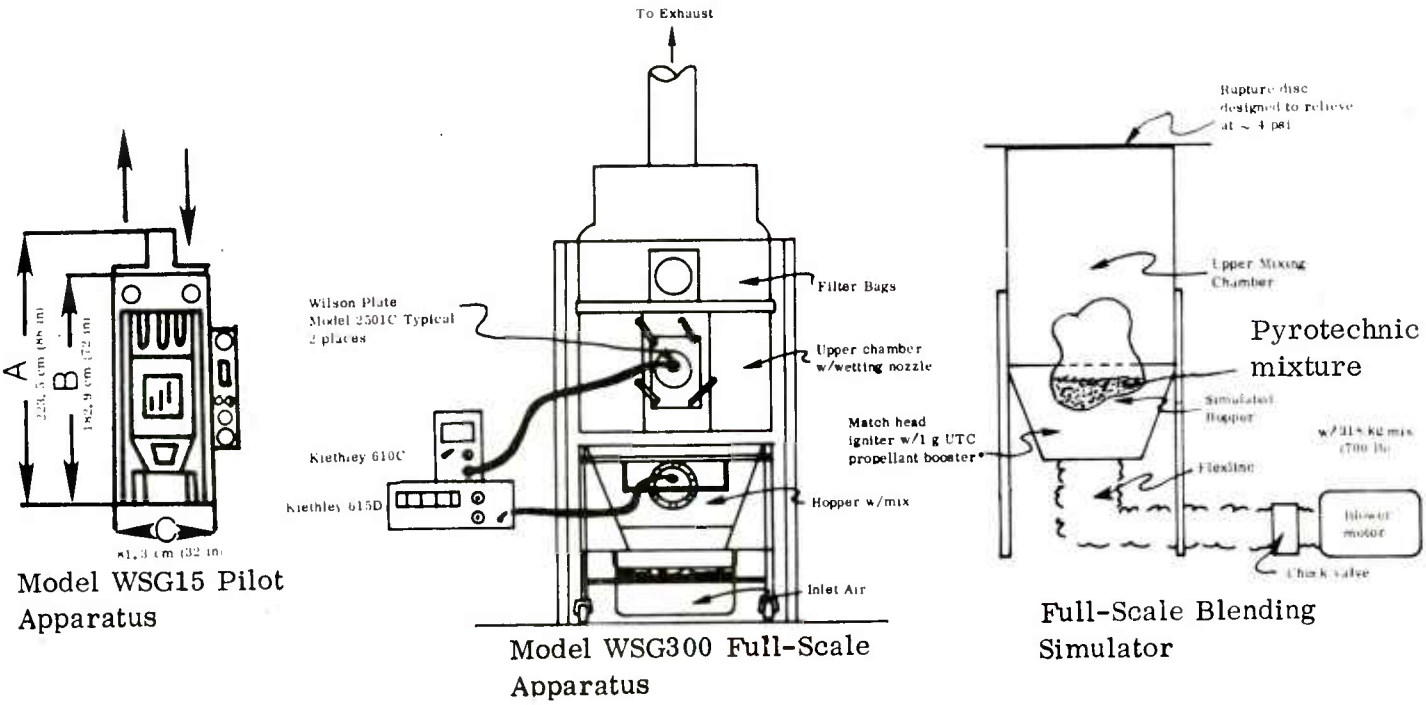

Figure 77. Fluid Bed Spray Granulation Electrostatic Measurements Set Up

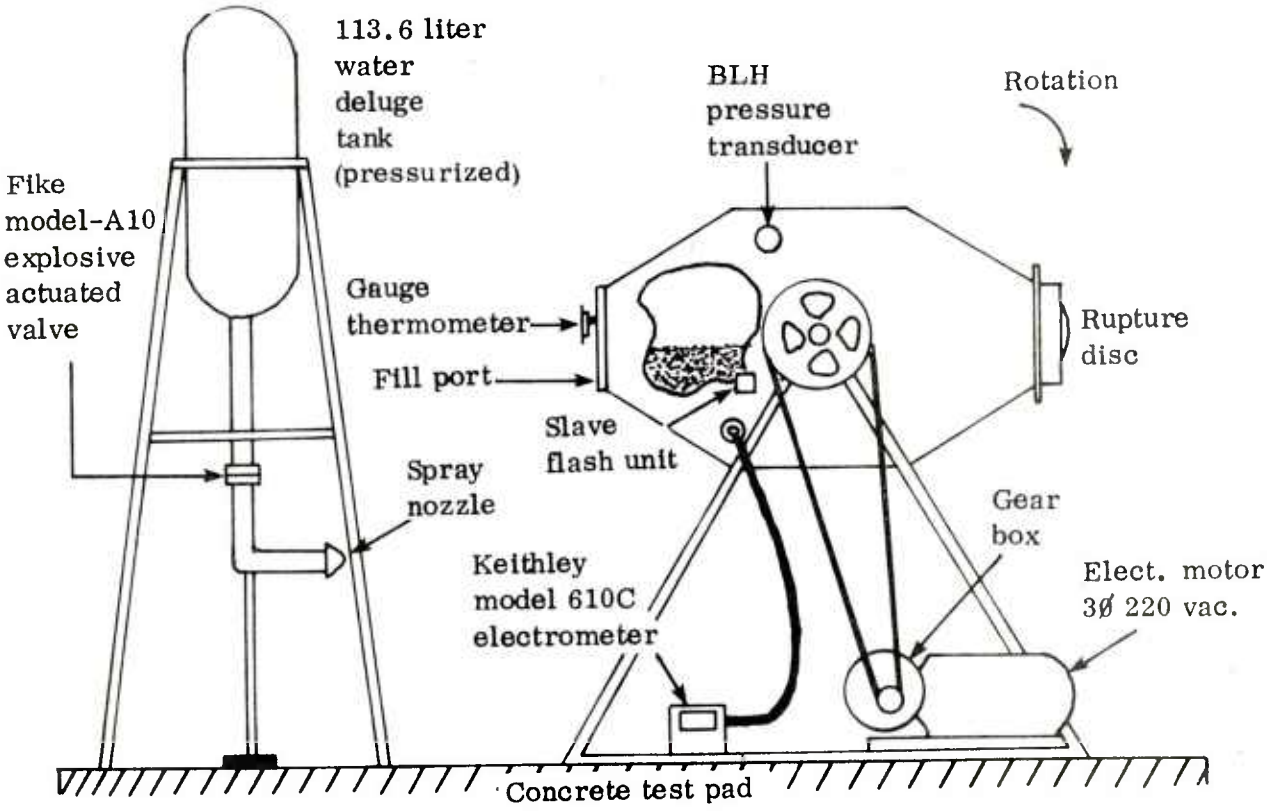

Figure 78. Experimental Test Set Up for a Thermal Ignition in Modified Mixer with Suppression System

DATA DISCUSSION

Friction

The results of the friction tests are given in tables 73 and 74 for the ball mill and planetary mixers. None of the mixtures tested ignited from the various forms of potential stimulus. These negative results indicated that the frictional forces were insufficient to cause initiation, intergranular, or granular object-container wall intergranular effects. Small and King [43] reported that an important consideration in determining if frictional effects can cause ignition is if the material (in this case, pyrotechnic mixture) melts before ignition (phase change). If this happens, the melted material acts as a lubricant which lowers the coefficient of friction. This was evidenced in these tests. It was more evident in the planetary tests. Running time for each configuration varied between 30-120 minutes. The planetary mixer had been shimmed to provide metal-to-metal contact of the blade to the side of the bowl and also to the bottom of the bowl at another point opposite the point where the blade made contact with the side.

It should be noted that these tests were qualitative and cursory in nature and were not intended to be a definitive treatment of the subject. Although various pyrotechnic mixtures were subjected to simulated worst case conditions, they failed to ignite. This

TABLE 73. EFFECTS OF INDUCED FRICTIONAL STIMULI ON PYROTECHNIC MIXTURES DURING TUMBLE-BLENDING IN A BALL MILL

Test material	Number of tests	Selected RPM	Running time min	Ball mill container A	Ball mill container B	Ball mill container C
40mm red smoke, lactose based batch no. 6349-2	3	30 15	30 120	NR NR	NR NR	NR NR
40mm red smoke, lactose based batch no. 6310-2	3	30 15	30 120	NR NR	NR NR	NR NR
40mm green smoke, lactose based batch no. 6345-1	3	30 15	30 120	NR NR	NR NR	NR NR
40mm green smoke, lactose based, batch no. 6289-1	3	30 15	30 120	NR NR	NR NR	NR NR
M-18 green smoke, sulfur based batch no. 6348-1	3	30 15	30 120	NR NR	NR NR	NR NR
M-18 green smoke, sulfur based batch no. 6316-2	3	30 15	30 120	NR NR	NR NR	NR NR
M-18 violet smoke, sulfur based batch no. 6349-1	3	30 15	30 120	NR NR	NR NR	NR NR
M-18 violet smoke, sulfur based batch no. 6307-1	3	30 15	30 120	NR NR	NR NR	NR NR
NSTL illuminant mixture batch no. 1607-1	3	30 15	30 120	NR NR	NR NR	NR NR
M-18 violet smoke, sulfur based batch NSTL 1607-1	3	30 15	30 120	NR NR	NR NR	NR NR

NR = No reaction

TABLE 74. EFFECTS OF METAL-TO-METAL CONTACT ON PYROTECHNIC MIXTURES DURING BLENDING IN A PLANETARY BLENDER

Test material	Number of Tests	Running Time min	Results
40mm red smoke, lactose based batch no. 6349-2	3	30	No reaction
40mm red smoke, lactose based batch no. 6310-2	3	60	No reaction
40mm green smoke, lactose based batch no. 6345-1	3	60	No reaction
40mm green smoke, lactose based batch no. 6389-2	3	60	No reaction
M-18 green smoke, sulfur based batch no. 6348-1	3	60	No reaction
M-18 green smoke, sulfur based batch no. 6316-2	3	60	No reaction
M-18 violet smoke, sulfur based batch no. 6349-1	3	60	No reaction
M-18 violet smoke, sulfur based batch no. 6307-1	3	60	No reaction
NSTL illuminant mixture batch no. 1607-1	3	60	No reaction
M-18 violet smoke, sulfur based batch no. NSTL 1607-2	3	60	No reaction
Red phosphorus - methylene chloride butyl rubber	3	40	No reaction

failure may be caused by the inability to reproduce the head pressure of the pyrotechnic mixture in the mixer and the kinetic energy of objects falling from a distance of approximately 2 m, as might be expected in a full scale operation. Friction stimulus has been determined as the cause of explosion and fires in the blending of pyrotechnics when foreign objects have entered the mixer, but the results of these tests indicate that the energy required for initiation was greater than that generated in the small-scale experimental apparatus.

Electrostatic

Pneumatic blending, as in a jet Airmix mixer, was new. The Airmix mixer has a working capacity of 984 kg (2170 lb) with a blending cycle of less than one minute. A pulse of air with a duration of 2 to 5 seconds is passed through 36 Lavel nozzles at a preset angle and this lifts the ingredients up the total height of the column. This is followed by a pause of 5 seconds allowing the ingredient to come to full rest; then the pulse cycle is repeated until 5 full pulse-and-pause cycles have occurred. At this time, the mixture should be completely blended. The hazards associated with pheumatic blending were thought to include: 1) surface charge due to triboelectrification, 2) dust suspension at different concentrations, 3) high impingment velocities of particles and mass effects from such a large quantity of mixture. Particular emphasis was placed on the measurement of the surface charge and the determination of initiation levels for various pyrotechnic mixtures. At present, only smoke mixtures have been tested in the Airmix mixer. Initially, tests were conducted in a 1-liter bench model Airmix mixer. Individual constituents were tested first, then two ingredients at a time, and finally the complete mixture was tested. From the scaled test, full-scale production was accomplished in the Airmix mixer and the measurements shown in table 75 were recorded. Surface charge measurements of individual constituents indicated that such measurements are quite low - much

TABLE 75. ELECTROSTATIC MEASUREMENTS OF CONSTITUENTS AND COMPLETE HC MIXTURE IN A 1 LITER AIRMIX MIXER

Sample material and charging sequence	Energy level Joules $E = \frac{Q^2}{2c}$		
	High	Low	Mean
Zinc oxide	2×10^{-8}	2×10^{-9}	1×10^{-9}
Hexachloroethane	3×10^{-8}	1×10^{-9}	9×10^{-9}
Aluminum	3×10^{-9}	1×10^{-11}	5×10^{-10}
Hexachloroethane/zinc oxide	3×10^{-7}	3×10^{-9}	1.5×10^{-7}
Hexachloroethane/aluminum	2×10^{-9}	4×10^{-10}	1×10^{-9}
Zinc oxide/aluminum	1×10^{-8}	4×10^{-9}	7×10^{-9}
Hexachloroethane/zinc oxide/ aluminum	9×10^{-7}	1×10^{-7}	5×10^{-7}

lower than anticipated. The surface charge for the completed mixture is higher than individual constituents by an order of magnitude, but on the same order of magnitude of two ingredients at a time (zinc oxide/hexachloroethane). However, the values are well below the ignition level of an HC smoke dust cloud as had been determined by King and Koger [42] through full-scale blending using 984 kg (2170 lb) of HC white smoke. These values are reported in table 76. The location of the detector probe was position number 1, which was 30.5 cm (12 in) from the top of the mixer; position 2 was located in the center of the mixer; and position 3, the probe, was located 30.5 (12 in) above the Lavel nozzles. As shown in table 76, the highest reading was incurred 30.5 cm (12 in) from the top of the mixer. These values indicate that, while the values were greater than those of the 1-liter model, they are significantly less than that required for initiation. The results of these tests indicated that surface charge due to triboelectrification was quite small, in fact much less than orginally anticipated. There seemed to be no apparent problem from high-velocity particle collision. Dust suspension does occur in this type of blending but, again, the surface charge values were well below initiation levels of the dust cloud.

TABLE 76. FULL-SCALE BLENDING TEST ENERGY LEVELS

Detector probe position	Energy level Joules $E = \frac{Q^2}{2c}$		
	High	Low	Mean
1	2.82×10^{-5}	2.8×10^{-7}	8.6×10^{-6}
2	7.86×10^{-6}	1.12×10^{-6}	2.91×10^{-6}
3	1.39×10^{-6}	6×10^{-8}	2.8×10^{-7}

This same series of tests was conducted using violet smoke IV Dwg. No. B143-5-1. These results are shown in table 77 and 78. Tests were conducted on individual ingredients, two at a time, three at a time, and finally, the complete mixture. Measurements obtained are on the same general order of magnitude as those found in the HC white smoke tests. The highest values were obtained on the individual constituents, the lowest on the complete mixture. As in the HC white smoke study, the next step was to obtain measurements in the full-scale blender. Detector probe location was identical to the set up for HC smoke. The results indicated that a much higher energy level was present in the full-scale tests than in the 1-liter tests. However, the energy present is still several orders of magnitude less than that required for initiation of violet smoke. The preblend (without the oxidizer) values were higher than the complete mixture. This is somewhat in agreement with the 1-liter tests, but the main difference in energy levels is the capacitance size of the two test vessels (full-scale versus bench model). Still, the results were similar to the HC white smoke study in that the amount of surface charge present, although higher than the HC values, is still significantly less than that required for initiation of the dust cloud or mixture.

A similar series of measurements was obtained on full-scale blending of violet smoke in a double cone blender. These results are shown in table 79. This method of blending has been used for many years as the standard practice for dry blending of smoke. The

TABLE 77. ELECTROSTATIC MEASUREMENTS OF CONSTITUENTS AND COMPLETE VIOLET SMOKE MIXTURE

(Average Charge Generation of Three Blending Cycles)

Formulation	Total weight (grams)	Energy level (joules) $E = \frac{Q^2}{2C}$		
		High	Low	Mean
Sodium bicarbonate/ sulfur	200	3.52×10^{-7}	6.95×10^{-10}	5.87×10^{-8}
Sodium bicarbonate/ potassium chlorate	200	5.45×10^{-9}	3.64×10^{-10}	5.78×10^{-10}
Sodium bicarbonate/ violet dye	200	1.28×10^{-9}	2.05×10^{-10}	4.37×10^{-10}
Sulfur/violet dye	200	1.68×10^{-9}	9.75×10^{-10}	3.17×10^{-10}
Potassium chlorate/ violet dye	200	2.77×10^{-9}	2.05×10^{-10}	4.32×10^{-10}
Potassium chlorate	200	9.33×10^{-7}	7.2×10^{-8}	4.88×10^{-7}
Sulfur	200	1.54×10^{-6}	1.29×10^{-7}	2.83×10^{-7}
Sodium bicarbonate	200	4.63×10^{-6}	6.30×10^{-8}	4.86×10^{-7}
Violet dye	200	4.56×10^{-6}	1.15×10^{-7}	2.67×10^{-7}
Sodium bicarbonate/ dye/sulfur	200	1.86×10^{-8}	2.06×10^{-10}	4.14×10^{-10}
Sodium bicarbonate/ dye/potassium chlorate	200	3.30×10^{-9}	2.06×10^{-10}	3.05×10^{-10}
Sodium bicarbonate/ sulfur/potassium chlorate	200	2.07×10^{-9}	3.64×10^{-10}	5.51×10^{-10}
** Sodium bicarbonate/ sulfur/dye potassium chlorate	200	1.28×10^{-9}	3.64×10^{-10}	5.25×10^{-10}

** Complete mixture

surface buildup is due to particle collision from the tumbling action. The values were obtained from a single probe located near the center of the mixer as the ingredients were being tumbled at 12 rpm. The values obtained were generally less than an order of magnitude less than those of the same mixture in the pneumatic Airmix mixer. This was significant since it was assumed that pneumatic blending would have resulted in much higher readings due to the high velocities for particle collision to have occurred. This was not the

TABLE 78. FULL-SCALE BLENDING ELECTROSTATIC CHARGE GENERATION
(Average Charge Generation of Three Blending Cycles)

Formulation	Weight kg (lb)	Detector probe position	Energy level (joules) $E = \frac{Q^2}{2C}$		
			High	Low	Mean
Preblend	340 (750)	1	.131	1.94×10^{-2}	2.41×10^{-2}
		2	1.24×10^{-2}	5.57×10^{-3}	9.54×10^{-3}
		3	1.69×10^{-2}	1.05×10^{-2}	1.43×10^{-2}
Final blend**	454 (1000)	1	8.04×10^{-2}	3.65×10^{-3}	5.63×10^{-3}
		2	8.66×10^{-3}	4.88×10^{-3}	6.98×10^{-3}
		3	1.15×10^{-2}	7.89×10^{-3}	9.44^{-3}

case. Still the results obtained in the double cone tests were significantly less than that required for initiation.

Finally, the same series of measurements were conducted on a pilot model and the full-scale production of colored smoke in the Fluid Bed Spray Granulation Process. These

TABLE 79. ELECTROSTATIC ENERGY GENERATED DURING BLENDING OF VIOLET SMOKE IV DRAWING NO. B143-5-1 IN THE DOUBLE CONE MIXER

Composition	Weight kilograms (pounds)	Energy level (joules) $E = \frac{Q^2}{2C}$		
		High	Low	Mean
Violet smoke mix IV drawing no. B143-5-1	226.8 (500)	3.06^{-3}	1.19^{-4}	2.01^{-3} ($\pm 1.2^{-3}$)

results are shown in table 80 for the pilot plant study and in table 81 for the full-scale production model. In this process, the mixture is blended pneumatically for approximately 4 to 8 minutes, and then a wetting occurs by adding a water/dextrin solution at a specified rate for another 5 to 10 minutes, or until proper granulation occurs. Then the wetted mixture is dried at 60°-80° C (140° F to 175° F) for approximately one hour. Batch size is approximately 318 kg (700 lb). Violet smoke, red smoke, and chemical agent CS were manufactured by this process during the certification tests. This is an entirely new process where the finished product is dust free. All of the tests on the pilot model and full scale apparatus were conducted at the manufacturing facility under proposed production conditions.

TABLE 80. PILOT MODEL WSG15 BLENDING ELECTROSTATIC CHARGE GENERATION

Formulation	Weight kg (lb)	Operation / Time (min)	Energy level (joules) $E = \frac{1}{2}\frac{Q^2}{2C}$ High	Low	Mean
Violet smoke mixture Dwg. # B143-5-1	13.6 (30)	Blending 2	2.13×10^{-8}	5.92×10^{-10}	8.79×10^{-9}
		Wetting 8	9.43×10^{-7}	4.8×10^{-8}	6.6×10^{-7}
		Drying 21	2.13×10^{-6}	9.01×10^{-7}	1.55×10^{6}
Red smoke mixture Dwg. # B143-3-1	9.07 (20)	Blending 3	1.89×10^{-5}	1.71×10^{-7}	7.77×10^{-6}
		Wetting 21	3.19×10^{-5}	1.06×10^{-5}	1.82×10^{-5}
		Drying 34.5	1.03×10^{-5}	7.26×10^{-7}	4.55×10^{-6}
CS chemica agent Dwg. # B143-14-7	9.07 (20)	Blending 3	2.49×10^{-5}	9.48×10^{-9}	1.3×10^{-5}
		Wetting 25	9.01×10^{-7}	1.16×10^{-7}	3.04×10^{-7}
		Drying 25	2.61×10^{-7}	5.93×10^{-10}	9.64×10^{-8}

TABLE 81. FULL-SCALE MODEL WSG300 BLENDING ELECTROSTATIC CHARGE GENERATION (Average Charge Generated for Two Blending Cycles)

Formulation	Weight kg (lb)	Operation / Time (min)	Energy level (joules) $E = \frac{1}{2}\frac{Q^2}{2C}$ High	Low	Mean
Violet smoke mixture Dwg. # B143-5-1	299 (660)	Blending 7.5	5.58×10^{-7}	1.99×10^{-9}	1.66×10^{-7}
		Wetting 38.5	3.2×10^{-6}	3.46×10^{-6}	1.31×10^{-6}
		Drying 59	2.04×10^{-6}	2.08×10^{-11}	8.38×10^{-7}
Red smoke mixture	299 (660)	Blending 5.5	3.31×10^{-6}	1.3×10^{-6}	2.55×10^{-6}
		Wetting 54	3.23×10^{-6}	8.32×10^{-13}	5.61×10^{-7}
		Drying 60	3.32×10^{-6}	6.74×10^{-11}	1.43×10^{-6}
CS chemical agent Dwg. # B143-14-7	290 (640)	Blending 22	7.04×10^{-7}	1.87×10^{-8}	1.48×10^{-7}
		Wetting 23	5.87×10^{-5}	3.67×10^{-8}	9.3×10^{-7}
		Drying 84	1.14×10^{-7}	8.32×10^{-11}	2.02×10^{-8}

The results of these tests were similar to those found in the jet Airmix and double cone mixer tests. In the pilot test studies, violet smoke had the least amount of surface charge (coulombs) and red smoke had the highest. Generally, the lowest surface charge was during the blending cycle and the highest amount of surface charge was measured during the drying cycle. Similar results were detected in the full-scale tests. Red smoke, on the average, had the greatest surface charge and chemical agent CS had the least amount of surface charge. The total amount of energy generated by the surface charge was well below that required for initiation of any of these types of mixtures. Figure 79 shows the electrostatic charge generation during the blending cycle.

The results of these electrostatic measurements for the jet Airmix, double cone mixers, and the Fluid Bed Spray Granulation Process indicate that electrostatic charge generation was not as significant a problem nor as hazardous as originally conceived. This is not to indicate that electrostatic hazards do not exist, but the measurements obtained under these conditions, triboelectricification due to the moving particle collision, are minimal. Other sources of electrostatic energy or electrical spark initiation hazards may still cause initiation. Each individual mixer and each pyrotechnic must be considered separately.

Thermal Ignition Tests

The purpose of full-scale thermal ignition tests was to determine if smoke and chemical agents in large quantities, 227 kg to 984 kg (500-2170 lb), would detonate. Test results are shown in table 82. In all cases the smoke mixtures burned at a very slow rate. The pressure

TABLE 82. RESULTS OF FULL-SCALE BURN TESTS

Material	Weight kg (lb)	Total burn time (sec)	Gross reaction rate kg/sec	Maximum temperature °C °F	Quasi-static pressure kPa (psig)
HC white smoke jet Airmix (static)	984 (2170)	564	1.74	(1740)	34.5 (5)
Violet smoke jet Airmix (static)	454 (1000)	110	4.13	154 (309)	34.5 (5)
Violet smoke jet Airmix (dynamic)	454 (1000)	175	2.23	334 (633)	8.27 (1.2)
Violet smoke double cone	227 (500)	82	2.77	-	(20)
Violet smoke FBSGP*	336 (740)	126	2.67	365	34.5 (5)
Red smoke FBSGP*	336 (740)	44	7.64	318	34.5 (5)
Chemical agent CS FBSGP*	435 (960)	369	1.10	463	13.8 (2)

*Fluid Bed Spray Granulation Process

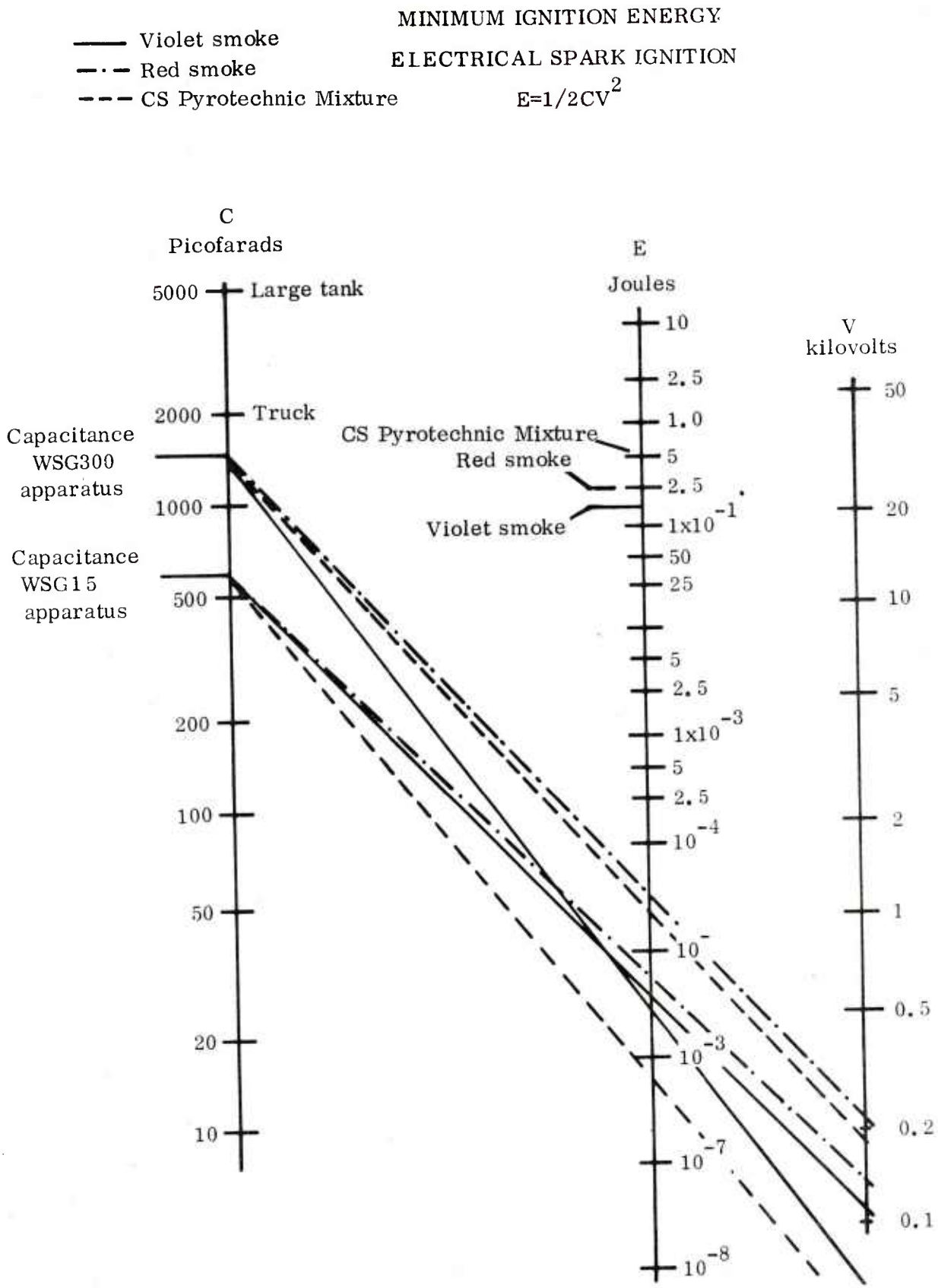

Figure 79. Nomograph of Electrostatic Charge Generation During Mixing, Granulating and Drying in Pilot and Full-Scale Fluid Bed Spray Granulation Process

was vented in every case, except in the double cone mixer test, and in this case the mixer ruptured. The pressure developed by the rupture was less than 2% of the equivalent weight of TNT. It was shown from these tests in both the dynamic and static conditions that the potential problem was a thermal one versus an explosive hazard. Since this was the case, a test was conducted to preclude pneumatic rupture of the vessel by the use of a rupture disc affixed to the double cone blender. The results of this test are shown in table 83. The results indicated that the rupture disc prevented destruction of the mixer and lessened the explosive hazard. It should be noted that the gross reaction rate (kg/sec) of the burn was somewhat less than for the vented mixer. Burning time was also longer, due primarily to the lower pressure generated in the vented mixer than in the unvented mixer, which ruptured. The gross reaction rate is directly proportional to the pressure.

TABLE 83. RESULTS OF FULL-SCALE SUPPRESSION TESTS

Material and configuration	Weight kg (lb)	Total burn time sec	Gross reaction rate kg/sec	Maximum pressure	Results
Violet smoke in double cone blender w/o rupture disc	227 (500)	82	2.77	138 (20)	Pneumatic rupture
Violet smoke in double cone blender w/rupture disc	227 (500)	135	1.68	48 (7)	Venting thru rupture disc

SUMMARY

Specific types of blending operations were investigated to determine the potential hazards of friction, electrostatic, and worst-case initiation during the blending cycle. New and varied equipment was tested for possible certification and use to replace existing blending methods. Quantities of mixtures, ranging from 227 to 984 kg (500 to 2170 lb), were studied and tested to determine mass effect results with the possibility of blending pyrotechnics in larger batch sizes. Finally, a completely new blending process, in which a single device blends, granulates, and dries the product complete, ready for loading, and essentially dust free, was tested.

The results of friction tests on scale-model mixers were inconclusive in that the frictional energy required for initiation was not achieved, possibly because of other parameters such as mass effects. It was determined from these experiments that some pyrotechnics, particularly smokes, act as lubricants and reduce the potential friction hazards.

Electrostatic measurements on scale models, pilot models, and full-scale blenders indicate that triboelectric effects due to particle collision are minimal in pneumatic

and tumble type mixing. Values measured were several orders of magnitude less than the initiation level of the materials being tested.

Full-scale burn results indicated, in every case and in each type of mixer, that the greatest damage potential from thermal ignition was thermal in nature. This was particularly true if some form of venting occurred. If a system was allowed to remain closed after ignition, pneumatic rupture would result. Fragmentation damage would be minimal and normally would be contained inside any hardened structure. By modifying the mixer and adding a rupture disc, pneumatic rupture could be avoided, reducing the total reaction to a thermal type reaction.

The results of these studies determined that:

1) The hazard associated with pneumatic blending is no greater than conventional dry or wet blending

2) Pneumatic blending may be safer in that the actual blending time is significantly less than conventional methods, thereby reducing exposure time

3) Blending large quantities of pyrotechnics is feasible

4) The hazards associated with blending large quantities of certain types of pyrotechnic mixtures (in this case, smoke mixtures) are primarily thermal in nature

5) Electrostatic hazards due to triboelectrification are extremely low

6) Frictional forces of blending colored smokes and certain screening smokes are lessened because the low melting points of these mixtures cause them to act as lubricants.

DUST EXPLOSIONS

BACKGROUND

Generally, the ingredients of most pyrotechnic mixtures are made of finely divided powders with an average particle size of 75 micron. This constitutes a large surface area for burning and, as can be expected, almost all operations associated with the manufacturing and handling of pyrotechnic mixtures lead to dust problems. Dusting can and is kept to a minimum in certain mixing operations by wet blending. Addition of binders and granulation of wet mixtures also reduces the hazard. However, after blending, some mixtures are sieved and screened prior to the filling operation so that a dust hazard potential still exists. Dust has been such a menace to the manufacturer that new and varied processes are being experimented with in order to become "dust free." This goal has not been achieved at most operating facilities.

Background information on accident/incident data indicates that several dust explosions were known to have occurred. It is also known that several "GO-GO" facilities are introducing new materials handling techniques involving automated transfer equipment, newer and larger mixers which are capable of producing larger quantities of material, consequently creating a greater potential for dust hazards.

A dust explosion is a rapid combustion of finely divided solid suspended particles with a flame front that progresses at a rate greater than 3.05 m/sec (10 ft/sec) accompanied by a sudden increase in pressure. A dust explosion is a classic example of an Initiation-Communication-Transition (I-C-T) phenomenon. This is shown in figure 80 with the use of a simple logic diagram of a dust explosion.

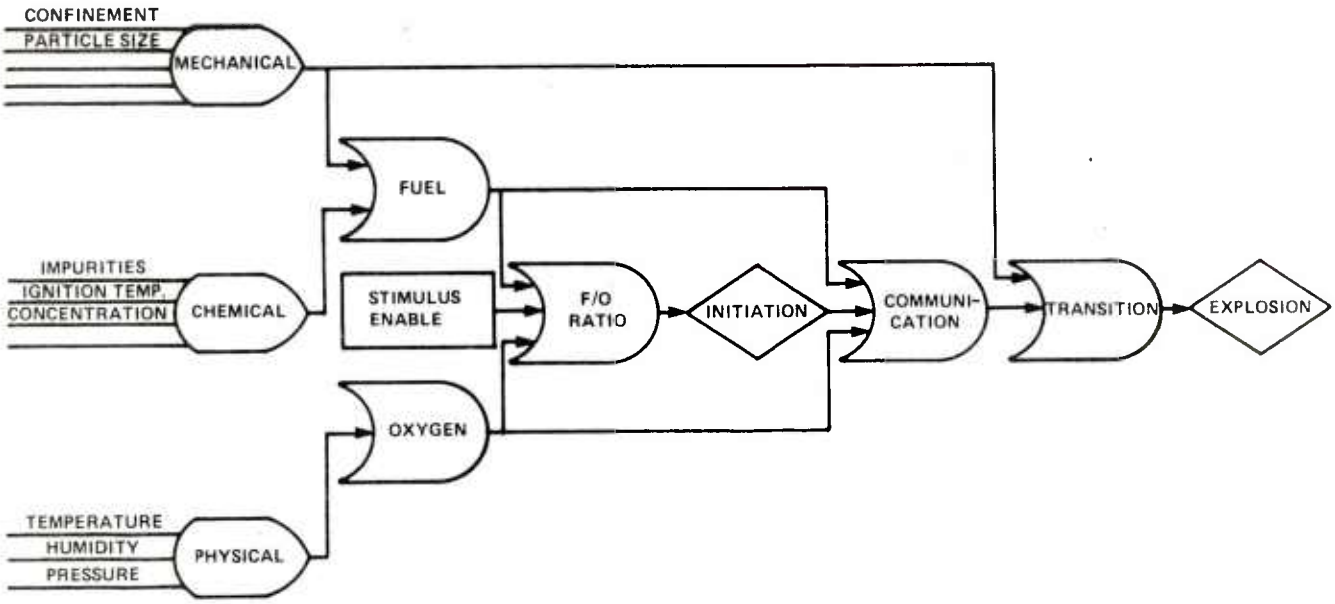

Figure 80. Initiation-Communication-Transition Phenomenon of a Typical Dust Explosion

Initiation occurs when a given stimulus is applied to the surface area of the suspended solid particle. Communication occurs when additional suspended solid particles in close proximity to the initial burning particle is ignited by it. The transition from simple combustion to an explosion is dependent upon the same physical, chemical, and mechanical properties that were present for initiation, and the fact that additional chemical elements must be present.

This model is shown in its simplest possible form for a typical fuel type dust. It should be noted that a typical pyrotechnic composition contains its own fuel and oxygen in such a way that the "and" logic gate is satisfied. However, this model is prevalent in those situations where the fuel is available in excess or prior to being mixed. It should be noted from this model that; 1) the initial stimulus is no longer required once communication has occurred, and 2) the mechanical and chemical parameters continue to interact during the communication and transition phases of the reaction. Once transition to an explosion has occurred, the reacting material assumes certain definable characteristics of an explosion with a flame and shock front accompanied by a distinguishable blast overpressure. However, the time frame for the event to occur is in milliseconds, whereas, the explosion reaction process occurs in microseconds.

Hartman Test

Dust explosion phenomena associated with pyrotechnic mixtures have been investigated quite extensively over the past several years. The initial undertaking was conducted in a Hartmann device. This device determines the minimum dust concentrations and the minimum energy needed to ignite a specific dust concentration. The particular test methods of each of these tests were described in Test Methods. Figure 81 shows a typical apparatus.

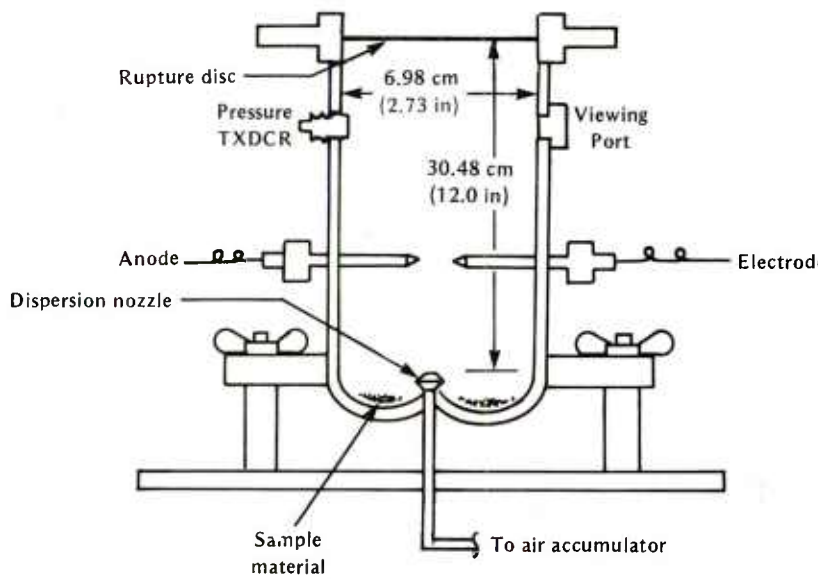

Figure 81. Schematic of a Typical Hartmann Chamber

Work accomplished in this apparatus has been reported by King and Koger [42] and by Wilcox [22].

Scaled-Up Tests

Scaling of the initial results was accomplished by modifying the Hartmann and adding an extended tube; whereby, the propagative phenomena could be observed as well as the initial combustion process. This device is shown in figure 82. Primarily, pyrotechnic constituents were tested in this phase and the ignition source was held constant at a level sufficiently greater than the minimum energy required for initiation. This series of tests led to the construction of larger dust galleries where selected pyrotechnic mixtures were tested in various scaled applications found in manufacturing facilities. Specifically, once the data base was determined, methods of detection and suppression methods were devised to reduce the hazard potential.

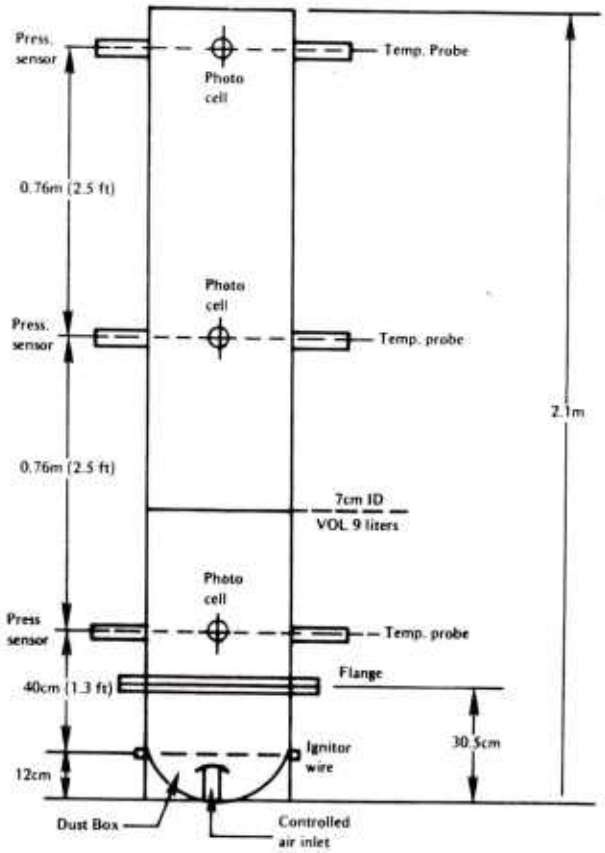

Figure 82. Extended Tube Hartmann Apparatus

McKown[45, 49] reports on the specific test methods employed and the findings. Nestle[41] performed the initial experiments in the horizontal galleries. From his experiments in the extended Hartmann Apparatus and horizontal dust galleries, detection and suppression methods were established which could preclude a dust explosion or limit it to a confined area. Their findings indicated that detection of the slow moving flame front and accompanying shock wave could be detected by a UV type sensor and photocells; however, the UV detector was the more reliable and could also be used to activate the suppression system.

High pressure water was the best overall suppressant used. Water cannot necessarily be counted on to stop the reaction process, but it is certainly capable of cooling the flame front and lessening the potential hazards. A layout of the test set up is shown in figure 83.

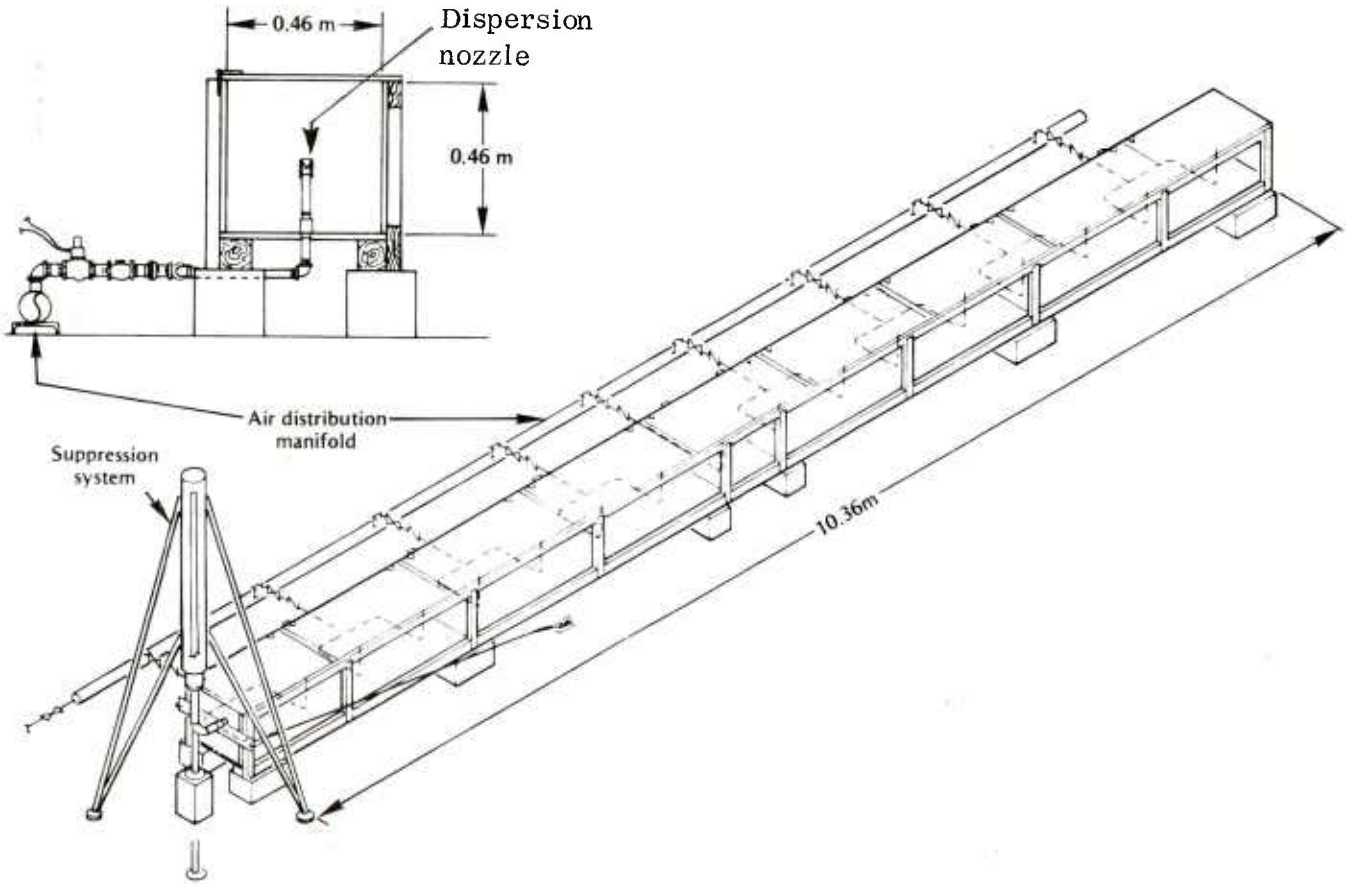

Figure 83. Plan Layout of Horizontal Dust Gallery

Recently, additional tests were conducted on selected pyrotechnic mixtures in a vertical dust gallery. The pyrotechnics chosen were from the so-called illuminant group; whereas, the majority of the previous work had been conducted with smokes. The energy of the illuminants, in particular tracer mixtures, was considered to be greater than the smoke mixtures. The method of dispersion was similar to the previous test series in that pneumatic dispersion was used. However, only a single pneumatic nozzle, which was located in the upper one-third quadrant, was used. The initiation source was located in the lower one-third of the gallery. A second difference was noted during the horizontal gallery tests; the ignition device functioned prior to dust dispersion and remained burning throughout the complete dispersion. In the vertical dust gallery, ignition occurred approximately 1 second after dispersion and was from a single source. The initiation device was an Atlas electric match fired remotely. Figure 84 shows the vertical gallery test set up.

The vertical dust gallery resembled a scaled-up version of a Hartmann Apparatus. The chamber was made from Lucite with a volume of .80 m^3 (28.3 ft^3).

Similar types of instrumentation were used. These included ion probes, spaced at 15.2 cm (6 in) intervals, and pressure transducers to measure the shock pressure. The objective

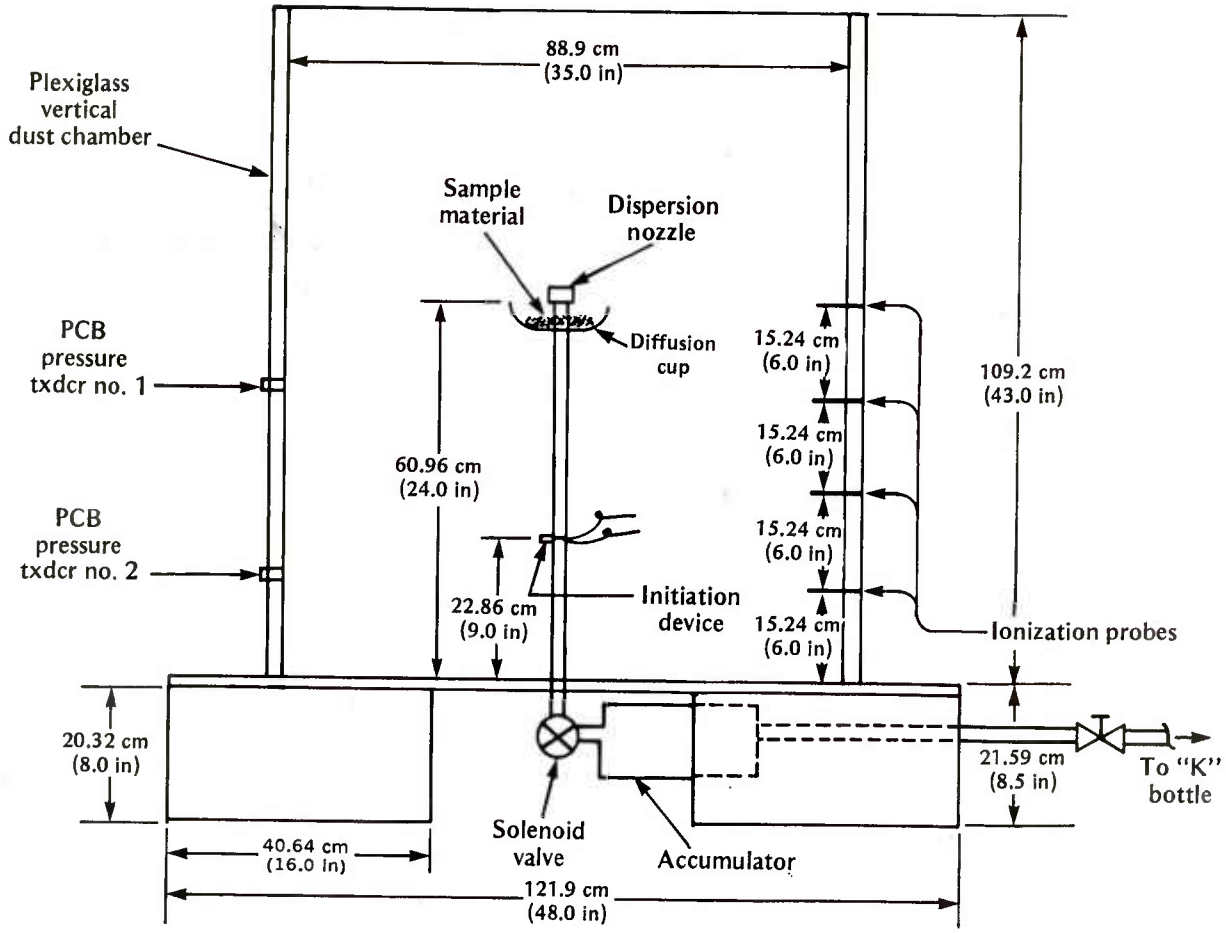

Figure 84. Plan Views of Vertical Dust Gallery

of these tests was to determine if these illuminant compositions would scale-up based upon results from the Hartmann device. No effort was made to suppress the reaction.

DATA DISCUSSION

Table 84 shows the results of the Hartmann Apparatus test and table 85 shows the results of the extended apparatus. The results of the horizontal gallery test are given in table 86 and figures 85 and 86. Table 87 shows vertical dust gallery test results.

The minimum dust concentration varies with the type of pyrotechnic, but generally, the minimum dust concentration is less than 0.719 ox/ft^3. This is a result of the requirement for finely divided powders to obtain an intimate mixture.

The new proposed mixing processes, which begin with finely divided particles, continue with a binding and granulation as part of a single process which seems to lessen the dust concentration hazard. Results of such granulated materials are shown as the last number samples in the table.

Minimum ignition energy for each of the pyrotechnic mixtures varied significantly. Energy levels varied from a minimum of several millijoules to greater than 50 K joules. Analyses of test results do not necessarily correlate with particle size or minimum concentration. The total effect of the different types of energy applied is not known, nor is there any correlation due to the fuel/oxidizer ratio.

TABLE 84. HARTMANN TEST RESULTS

Sample Material	Particle size (microns)	Minimum concentration (oz/ft^3)	Minimum energy (joules)	Max. Press. kP2 (psi)	Max. rate of rise kPa/sec (psi/sec)
Red smoke III	74	0.036	50K	0	
White smoke	74	1.624	50K	0	
Green smoke IV	74	0.041	50K	(92)	(671)
Yellow smoke VI	74	0.036	50K	(38)	(299)
Violet smoke IV	74	0.021	25	1	-
PFP555	74	1.52	50K	-	-
FY1451	74	1.62	50K	-	-
FW306	74	0.97	50K	-	-
DP973	74	0.72	0.250	-	-
Green smoke	74	0.007	>50K	-	-
Yellow smoke	74	0.036	50K	-	-
Fuel mixture	74	0.002	5	-	-
FG491	74	0.719	50	-	-
Flare green	74	0.719	50	0	0
FY1444	74	1.62	50	0	0
FY375	74	1.62	50K	-	-
FY739	74	1.62	50K	-	-
FW231	74	0.719	50	-	-
Glatt green smoke		1.62	50K	-	-
Green smoke	74	0.016	50	-	-
Red smoke	74	0.036	50	-	-
Glatt red smoke		1.62	50K	-	-
Red smoke VII	74	0.072	50K	-	-
Yellow smoke	74	0.009	-	-	-
Yellow smoke IX	74	0.356	50	-	-
CS pyrotechnic mixture	74	1.62	50	-	-
M80 mixture	74	0.352	1.25	-	-
First fire mixture	74	1.62	50K	-	-
First fire mixture	74	1.62	50K	-	-
Fuel mixture VI	74	0.002	1	-	-
Fuel mixture III	74	0.325	2.5	-	-
Fuel mixture	74	0.719	5	-	-
DP602	74	0.72	0.5	-	-

The rate of pressure rise and total pressure tend to be weak in those samples where the pressure and flame front velocity measurements were obtained. These values are compared to Bureau of Mines standards. Generally, pyrotechnics are considerably weaker in terms of total energy of a dust explosion than similar fuels found in grains of coal dust. However, the dust explosion from a pyrotechnic mixture is potentially hazardous due to constituents such as lactose, sulfur, and boron which have considerably higher values than the total mixture. The oxygen and diluent has a tendency to reduce the overall dust explosion effect.

Table 85 shows the results of the extended Hartmann tests. The significant results of these tests indicate that propagation will occur. The majority of the tests were conducted on pyrotechnic constituents rather than complete mixtures. It should be noted that scaling can be considered to have occurred as well.

TABLE 85. EXTENDED HARTMANN RESULTS REACTION PROPAGATION VELOCITIES

Sensor position	Average velocity, m/sec		
	Pressure	Optical	Thermal
1-2	69+9 (250±70)	71±10	69±15
2-3	no data	127±20	35±8
1-3	no data	91±15	46±10

Lasseigne [46] conducted a series of dust gallery tests utilizing various colored smokes in early 1971. This work was reported by King and Koger [42]. The initial results indicated that an I-C-T phenomenon did occur. This test series utilized both pneumatic dispersion as well as gravity dispersion. One of the objectives of these experiments was to initiate a full-scale mixing bowl full of violet smoke mixtures. This objective was not met. These early tests were the forerunners of the tests conducted by Nestle. The results of these tests are shown in table 86. The primary purpose of the latter test series was to develop methods of detection and suppression.

The results of these test series indicated that the UV detection/high-pressure suppression system can be very effective in suppressing a dust explosion of the magnitude that may be found in a typical pyrotechnic manufacturing facility. Depending upon the application, the flame front can be cooled sufficiently to confine the potential hazards to a limited area. Sulfur, a constituent used in the production of colored smoke, is subject to explosive forces with a compression wave that propagates outward at near-sonic velocity. The flame front is much slower.

Vertical dust gallery results indicated that illuminant mixtures (tracer mixtures) develop classic I-C-T phenomena when initiated in a dust cloud. The velocity of the flame front is slower than grain dust or explosive dusts by several orders of magnitude, but it is

TABLE 86. SUMMARY OF FIRE SUPPRESSION TEST DATA

Test no. and fluid	Flame arrival time at UV sensor location 4.27m (ms)	Suppressant injection in chamber time from dust nozzel breakwire (ms)	System reaction time UV sensor to suppressant injection (ms)	Flame velocity ion probe parameters (m/sec)	Fire extin-guish point, passive sensor location (m)	Max. flame static pressure PSIG	Leading edge pressure wave velocity (m/sec)	Comments
40-5-01 Halon	200	225	26.0		5.8	0.9	240	
41-5-01 Halon	182	210	28.0		6.4	0.8	490	
47-5-01 Halon	216.2	242.5	29.3	41	6.4	0.8	280	
48-5-01 Water	230.9	257.3	26.4	48	7.0	0.6	335	
49-5-01 Water	220.3	267.1	46.8	44	9.4	1.1	182	All the leaves on the burst disc sheared off and passed through the suppressant nozzle. Probably plugged nozzle initially
49-5-02 Water	274	303.5	29.5		7.9	1.2	450	Suppressant nozzle plugged with pieces of burst disc approximately 80 percent

greater than flame fronts for smoke. Scaling based upon minimum dust concentration values obtained in the Hartmann aparatus occurred.

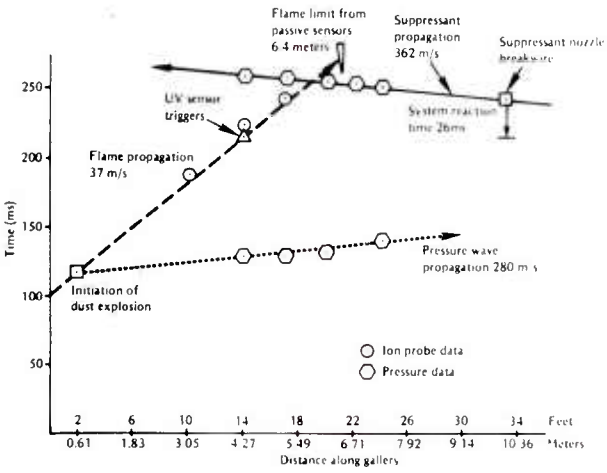

Figure 85. Test No. 47-5-01 Halon Suppressant

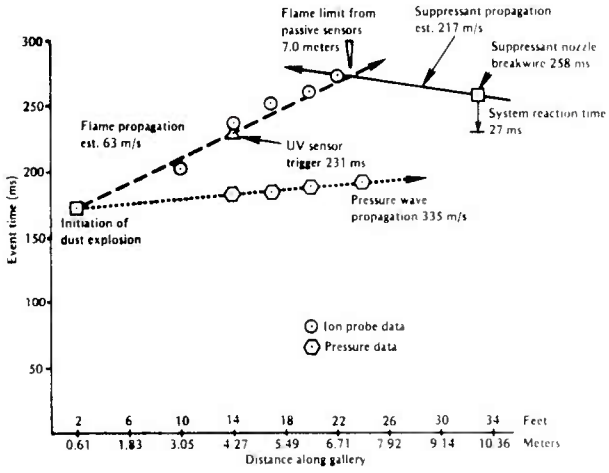

Figure 86. Test No. 48-5-01 Water Suppressant

TABLE 87. VERTICAL DUST GALLERY TESTS

Sample Material	Concentration	Flame front velocity m/sec	Press kPa (psi)	Remarks
R284	0.719 oz/ft	11.3	0	I-C-T reaction
I559	0.021	9.6	0	I-C-T reaction
I559	0.021	5.8	0	I-C-T reaction
I560	0.449	7.6	0	I-C-T reaction
I560	0.441	7.9	0	I-C-T reaction
I560	0.449	8.1	0	I-C-T reaction
I-560	0.449	8.6	0	I-C-T reaction

SUMMARY

The results of the dust sensitivity test program indicate that a real problem exists for pyrotechnic mixtures in the form of dust explosion hazards. Dust hazards potential for each individual pyrotechnic mixture is dependent upon its own chemical and mechanical properties rather than total mixture. The fuel constituents of a particular mixture present the most hazardous dust explosion potential, and the resulting I-C-T phenomenon will cause greater damage than a pyrotechnic mixture. Scaling from the laboratory apparatus (Hartmann tube) to larger vertical and horizontal dust galleries occurred on the majority of the samples tested. Detection of the flame front is possible with state-of-the-art sensors. Early detection, which will trigger a suppression system, reduces the potential damage of the dust explosion (I-C-T phenomenon). Two suppression medias were tested and found to be effective in reducing the damage of a pyrotechnic dust explosion. Based upon such knowledge as obtained in this study, it is feasible to lessen the hazards from a potential dust explosion. The detection, prevention, or reduction of such a hazard can be accomplished with minimum economic impact.

INCIDENT/ACCIDENT ANALYSIS

BACKGROUND

An accident survey was conducted to identify primary hazards and cause/effect relationships associated with pyrotechnic operations during development, manufacturing, transportation and, finally, ultimate use. The initial undertaking was limited to a literature survey but this was not very fruitful. The critical research indicated that the majority of the incidents went unreported due primarily to the nature of the material. Because of this, there was no dissemination of information. On-site, in-plant surveys were then conducted to determine cause/effect relationships and other contributing factors. Specifically, this survey was geared to manufacturing operations; however, the total data amassed included development, transportation and handling, and ultimate use as well.

Table 88 shows the type and percentage of incidents that occurred. There were 18% explosion and 5% accidents that transitioned from either a fire to an explosion or multiple explosions. As expected, the majority of the incidents were fires.

TABLE 88. SUMMARY OF TYPE INCIDENTS

Explosions	I- C- T	Fire	Other	Totals
103	27	435	12	577
18%	5%	75%	2%	100%

The significant factor here is that 23% of the incidents resulted in some form of an explosion, since pyrotechnic compositions are not normally considered to be explosive in nature. However, as was noted earlier, several compositions do have a TNT equivalency of greater than 10%, and it is these types of materials that could be involved in some of the more severe accidents. Less than 5% of all reported and unreported incidents were either critical, major, or severe in nature. This is pointed out in table 89. As

TABLE 89. SUMMARY OF SEVERITY OF INCIDENTS/ACCIDENTS

Unreportable	Minor	Critical	Major	Severe	Totals
495	40	22	3	17	577
$495,000	$114,550	$186,000	$384,000	$4,166,000	$5,345,550
85%	10%	1.5%	2%	1.5%	100%

suspected, the majority of the incidents go unreported and the damage was usually less than 100 dollars. This figure will increase since the unreported incident criteria has been raised to a 250 dollar limit before it becomes a reportable accident. Minor incidents which involved minor injury to employees and/or damage in excess of $250, but less than $1,000, constitute 10% of the total incidents. The major catagory consists of those incidents that involve lost time, injury, and/or damage to equipment in excess of $1,000 but no greater than $10,000. These incidents constitute approximately 2% of the total incidents. Severe accidents are those incidents that are in excess of $10,000 and/or a fatality has occurred. This catagory represents about 1.5% of the total occurrences. However, this could be misleading as shown in table 90.

TABLE 90. SUMMARY OF INJURIES AND FATALITIES OF PYROTECHNIC INCIDENTS/ ACCIDENTS FROM 1970 TO 1976

Type of Injury	Number of Incidents	Percent Of Total Occurrences	Number Of Injuries	Percent Of Total Occurrences
First Aid Injury Only	18	3	28	4.9
Loss Time Injury Only	20	3.5	30	5.2
Fatalities Only	9	1.6	16	2.7
Fatalities/Injuries	9	1.6	70	12.1

Fatalities and injuries which represent 1.6% of the total occurrences represent the largest number of injuries and deaths, or make up 12.2% of the total occurrences. Of the 577 incidents shown, 56 reported some form of injury or fatality, totaling 144. This is approximately 10% of the total occurrences. A comparison of 1496 explosive/propellants incidents[16] during the same period, indicates an injury/fatality rate of approximately 24%. The number of injury/fatality occurrences is less for pyrotechnics. Still, these numbers can be reduced.

RESULTS

Cause/effect relationships were difficult to establish because of the lack of input or information available. Unreportable incidents do not command or warrant an extensive investigation to develop a cure. As the data indicate many of the same types of incidents are reoccurring.

Table 91 shows the sources of initiation. Friction is cited as the primary stimulus in 54% of the total incidents. This is significant in that the least amount of information obtained by investigators has been on friction sensitivity. The information that is available is qualitative (friction pendulum) versus quantitative data that could be used by

TABLE 91. SUMMARY OF SOURCE OF INITIATION

Chemical	Electric	Friction	Heat	Impact	Pressure	Static Elec.	Undeterm.
13	11	312	12	65	36	41	87
2%	2%	54%	2%	11%	6%	8%	15%

operators and safety engineers. The majority of the incidents involving friction as the stimulus occur on the operating line where operators are reaming the excess from the fill and press operation, or from misalignment of the ram die in pressing operations. In the case of the reaming operation, operator error could be included as the major contributing factor because reaming is usually a manual operation. Figure 87 shows a typical reaming operator on a smoke grenade fill line. It should be noted that the "worst case" condition

Figure 87. Typical Reaming Operation

exists if an ignition occurs in the granular material being removed by the tool while the operator is applying force to hold the item against the reamer cutter. If the operator does not hold the item on center, metal-to-metal contact between the end item case and cutter blade can cause the spark for initiation.

A typical fill and press operation is shown in figure 88. The most often cited cause is misalignment of the ram and die. This could point to a maintenance problem and/or old equipment. The dwell time of the ram is also a contributing factor because highly compressed material becomes plastically deformed through intercrystaline strain as the ram nears the maximum distance of its travel and holds the mixture in consolidated state. Heat will form, possibly to the point of initiation. However, in the incident cited in this survey, misalignment was cited as the primary cause.

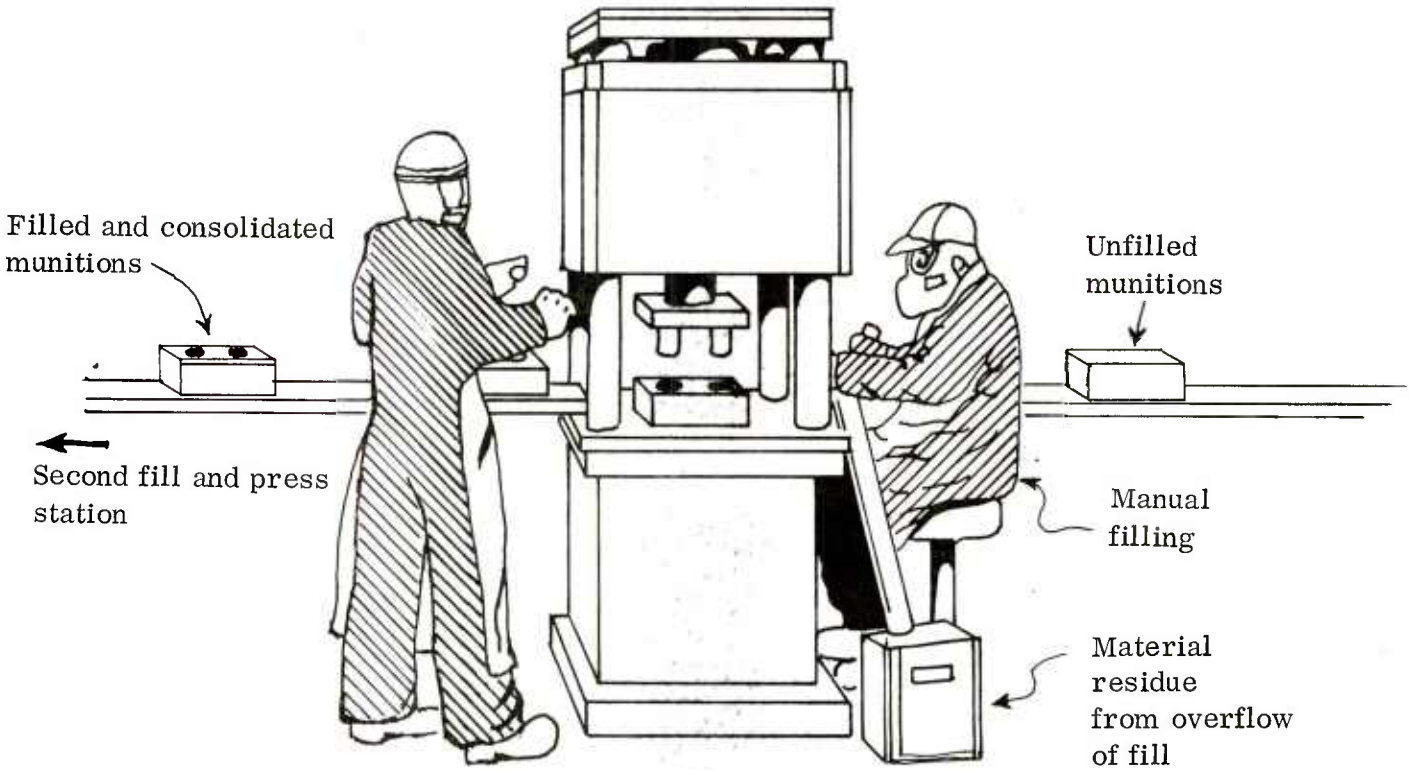

Figure 88. Typical Pressing Operations

Mixing accidents that cited friction as the cause were generally of two types: 1) the orbital mixing blade of a planetary mixer came into contact with the side of the mixing bowl, causing a pinching effect on the pyrotechnic mixture, and 2) foreign matter such as tools or metal parts were found in the mixture. These instances, particularly the latter where foreign debris was found, can only be attributed to operator error. The pinching in a planetary type mixer could usually be attributed to operator error (not having the bowl centered and seated properly on the base) and/or rough handling which causes dents in the side of the mixing bowl. Another possible cause is in maintenance where the blade has been shimmed or adjusted to provide clearance to keep the blade from making metal-to-metal contact.

In any case, the number of incidents involving friction as the stimulus could be reduced by utilizing proper equipment, proper maintenance, and fewer unsafe acts by the employees. The latter requires the greatest effort for conscientious safety officers to overcome.

Impact was cited as the next highest source of initiation. The most common cause was rough handling or dropping of items. This usually is an unsafe act of an employee.

In several instance, improper tools (tools that cause sparks) were used to either clean or chip from the side of mixing bowls, thus causing the initiation.

Table 92 is a summary of accidents versus the type of pyrotechnic. Nothing is significant about the types of pyrotechnic mixtures other than this is where the majority of evidence from the plant surveys was obtained.

TABLE 92. SUMMARY OF TYPES OF PYROTECHNIC MIXTURES

Primers	Light Producers	Smokes Signals	Gas	Noise	Heat Producers	Delays	End Items
12	21	385	35	7	59	2	56
2%	3.6%	66.8%	6%	1.3%	10.3%	0.3%	9.7%

Table 93 shows the operation and the type of incident severity and stimuli. Rate of occurrences are shown in descending order. The most common incidents were thermal in nature. This is to be expected by the nature of the material being handled. Pressing, mixing, reaming and filling operations have the most personnel performing these functions, and, consequently, the greatest percentage of incidents. Intraplant transfer, rework/demil, maintenance, assembly, disposal and pelletizing in terms of explosion versus fire were far more hazardous operations. These same operations seem to involve the more severe incidents which cause injuries or fatalities. This may be because the contributing factors cited in these operations were usually unsafe acts by the employees.

Table 94 is a summary of the contributing factors. It should be noted that there was generally more than a single factor leading to the undesired event. The reoccurrence of some of these factors indicated a failure to correct the deficiency. Additional information that could aid in a better definition of these factors was not readily available, because a shift in blame or pinpointing the problem could have greater legal repercussions. Another reason is that the follow-up on nonreportable type of incidents is minimal. For whatever reason, the amount of data pertaining to the actual cause of the incident was either ambiguous or vague.

SUMMARY

The results of this survey were preliminary in nature and constitute less than 10% of the total reportable/non-reportable incidents covering a period from 1950 to 1976. From this survey the following conclusions were made:

1. The majority of the incidents were thermal or fire type incidents. This was expected because of the nature of the materials under investigation.

2. The most commonly listed source of initiation was friction, for which there is the least amount of data available.

TABLE 93. OPERATION VERSUS TYPE INCIDENT, SEVERITY, STIMULUS FOR PYROTECHNIC INCIDENT/ACCIDENT FROM 1950 TO 1976

Operation	Type Incident				Severity					Stimulus								Total Occurrence	% of Total Occurrence
	Exp	I-C-T	Fire	Other	Unreport	Minor	Critical	Major	Severe	Chemical	Electrical	Friction	Heat	Impact	Pressure	Electro Static	Unknown		
Pressing	40	7	184	0	222	4	3	0	2	1	0	159	0	5	33	2	31	231	40
Mixing	8	2	43	6	16	6	0	0	1	1	0	25	0	3	0	1	23	53	9
Reaming	2	0	43	0	44	1	0	0	0	0	0	44	0	0	1	0	0	45	8
Filling	3	0	10	0	11	1	0	1	0	0	0	20	0	5	0	15	3	43	7.5
Intra-Plant Transfer/Handling	3	6	15	0	17	3	1	0	3	1	1	2	0	17	0	0	3	24	4.2
Loading/Unloading	4	1	17	0	16	2	2	1	1	1	0	1	0	10	0	10	0	22	4
Sieving/Screening/Weighing	2	0	20	0	17	1	2	0	2	3	0	14	0	2	0	2	1	22	4
Rework/Demil	4	4	11	1	12	2	3	1	2	2	0	5	2	5	0	2	4	20	3.5
Maintenance/Cleaning/Modification	6	4	7	2	12	3	3	0	1	0	5	6	1	2	0	2	3	19	3.2
Processing*	6	0	7	2	9	4	1	0	1	3	1	1	0	2	0	0	8	15	2.5
Testing	4	0	5	5	5	3	4	0	2	0	3	0	4	3	1	0	3	14	2.4
Sealing/Crimping	3	0	11	0	14	0	0	0	0	0	0	13	0	0	0	0	1	14	2.4
Curing/Drying	1	0	10	0	11	0	6	0	0	0	0	6	1	0	0	0	1	11	1.9
Inspection/Gauging	1	0	9	1	10	1	0	0	0	0	0	8	0	1	0	2	0	11	1.9
Assembly	7	1	0	0	5	2	0	0	1	0	0	3	0	4	1	0	0	8	1.3
Packaging/Packout	1	0	6	0	4	1	1	0	1	0	0	0	1	2	0	3	1	7	1.2
Disposal	3	1	2	0	1	4	1	0	0	0	1	0	2	1	0	2	0	6	1
Pulverizing/Grinding	2	0	3	0	4	1	0	0	0	0	0	2	1	2	0	0	6	5	0.8
Storage	0	1	2	1	3	0	1	0	0	1	0	1	0	1	0	0	1	4	0.7
Pelletizing	3	0	0	0	2	1	0	0	0	0	0	2	0	0	0	0	1	3	0.5
TOTALS	103	27	435	12	495	40	22	3	17	13	11	312	12	65	36	41	87		
% TOTALS	18	5	75	2	86	7	3.5	0.5	3	2	2	54	2	11	6	8	15		

*This was used when no specific operation could be identified.

3. The most dangerous operations, based upon severity and type of incident, were intra-plant transfer, rework/demil, maintenance, assembly, disposal, and pelletizing. This was primarily due to unsafe acts of the employees.

4. The reoccurrences of contributory factors indicate a failure to correct the deficiency.

5. There is more than one significant contributing factor leading to the incident, even though only one may be listed by the source.

6. The number of injuries or fatalities is approximately 10% of the total occurrences. Still, this number could be reduced.

7. Certain type injuries are not always noted correctly because of the added paper work and costs.

8. There is insufficient knowledge or follow-up after small incidents.

TABLE 94. SUMMARY OF CONTRIBUTORY FACTORS

Contributory Factors	Number	Percent of Totals
Misalignment	270	47
Unsafe Act of Employee	119	21
No Determination as to Cause	88	15
Improper/Poor Tools, Equipment, Design, Assembly, Facility	51	9
Weather (Temperature, Humidity, Thunderstorms/Lighting)	43	7.5
Poor/No S.O.P.	41	7.1
Excessive Pressure	37	6.4
Equipment Failure	27	4.7
Poor Safety/Supervision/Quality Control	19	3.3
Contamination/Corrosion	17	2.9
Chemical Imbalance	15	2.6
Insufficient Knowledge/Training	14	2.4
Excessive Quantities of Materials	11	1.9
Poor Housekeeping/Unsafe Work Area	11	1.9
Improper Safety Equipment/Protective Clothing	9	1.6
Poor Maintenance	6	1
Failure to Safe System	6	1
Excessive Heat	1	0.1

REFERENCES

1. Baker, W. E., Explosions in Air, University of Texas Press, Austin & London.

2. Harris, J., Autoignition Temperature of Military High Explosives by Differential Thermal Analysis, Thermochemica acta 1976, Elsevier Scientific Publishing Company, Amsterdam, printed in Belgium, pp. 133-139.

3. Dillehay, D.R., Closed Bomb Testing at Longhorn Army Ammunition Plant Proceedings Fifth International Pyrotechnic Seminar pp. 107-122 1976 Denver Research Institute.

4. Explosive Hazards Classification Procedures, tb 700-2 chan, 1 NAVORDINST 8020.3 ch-1 to 11a-1-47c Chapter 3, Minimum Test Criteria for Bulk Explosive Composition and Solid Propellant Composition.

5. King, P.V. and Koger, D.M., Contractor Report GE-MTSD-12-035, Final Report, contract NASB-23524, Pyrotechnic Hazards Classification and Evaluation Program Phase 1, Edgewood Arsenal, May 1970.

6. Ellern, H., Military and Civilian Pyrotechnics, Chemical Publishing Company, Inc. New York, 1968.

7. AMCP706-179, Engineering Design Handbook, Explosives Series, Explosive Trains AMC, March 1975.

8. Brucker, Ernest W., Blasting Cap Recognition and Identification Manual, Police Technical Series 02, International Association of Chiefs.

9. Jackson, B. and Taylor, F., Substitution of Aluminum for Magnesium as a Fuel in Flares, Proceeding at the Fourth International Pyrotechnics Seminar July 1974, pp. 9.1-9.37.

10. Webster, H.A., III, and Gilliam, C.W., Spectral Characteristics of Flares Containing Sodium Iodate as an Oxidizer, Proceedings of the Fourth International Pyrotechnic Seminar July 1974, pp. 3-1 to 3-22.

11. Dillehay, D.R., Burn Rate Modifiers, Proceedings of Fourth International Pyrotechnics Seminar, July 1974 pp. 11-1 to 11-8.

12. AMCP 706-185, Engineering Design Handbook, Military Pyrotechnic series, Part One Theory and Application, April 1977.

13. Carrazza and Kaye, Compilation of Sensitivity Characteristics of Pyrotechnic Compositions, TM1786, Feb. 1968.

14. Weingarten, G., Private Communication concerning card gap test result, 1972.

15. McIntyre, F.L., Incident/Accident Survey (1950 through 1974), Edgewood Arsenal contractor report EM-CR-76011, December 1975.

16. Petino, George, Jr., Propagation and/or Detonation Tests of Pyrotechnic Composition, Technical Memorandum 2146, Picatinny Arsenal, July 1974.

17. Blumenthal, R.H., Spadoni, D.J., Engineering Assessment of the Hazards Potential from Accidental Initiation of Pyrotechnic Composition and Typical Processing Equipment, Technical Report 4931, Picatinny Arsenal, April 1976.

18. McIntyre, F.L., Critical Mass of Pyrotechnic, Letter Report to Edgewood Arsenal Resident Cperations Office, NSTL Station, MS 39529, May 1975.

19. Pankow, J.F., and McKown, G.L., Effects of Environmental and Processing Conditions on Composition and Sensitivity of HC White Smoke Mix, Edgewood Arsenal contractor report EM-CR-70453, March 1975.

20. Pankow, J.F., Effects of Copper and Heavy Metals and Their Compounds, Final Report GE-MTSD-FR-036, June 1970.

21. McKown, G.L., and McIntyre, F.L., Parametric Studies of Pyrotechnic Materials by Bomb Calorimetry, Edgewood Arsenal Contractor Report EA-27R1, June 1977.

22. Wilcox, W.R., Pyrotechnic Dust Sensitivity Testing Program, Edgewood Arsenal contractor final report, EA-FR-IDOX, June 1973.

23. McIntyre, F.L., Identification and Evaluation of Hazards Associated with Blending of HC White Smoke Mix by Jet Airmix Process, Contractor Final Report, Edgewood Arsenal EA-FR-4D21, January 1974.

24. McIntyre, F.L., and Wilcox, R.R., Identification and Evaluation of Hazards Associated with Blending of Violet Smoke Mix by Double Cone Process, Edgewood Arsenal contractor report EA-27R1, April 1977.

25. McIntyre, F.L., Certification Tests for the Fluid Bed Spray Granulation Process for the Production of Colored Smokes, ARRADCOM contractor report, currently unpublished.

26. Dillehey, D.R., "Single Propellant Evaluation", Thikol Corporation, Proceedings of Sixth International Pyrotechnic Seminar, July 1978, pp 96-113.

27. Taylor, F., ARRADCOM Pyrotechnic Laboratory, Dover, New Jersey, Private Communication.

28. Second International Conference Standardization of Safety and Performance Tests for Energetic Material, Pyrotechnics Working Group, ARRADCOM, Dover, New Jersey, October 1979.

29. Pankow, J.F., Investigation of Hazards Associated with Plastic Bonded Starter Mix Manufacturing Processes, Final Report GE-MTSD-R-064, May 1971.

30. North Atlantic Treaty Organization (NATO) Standardization Agreement, STANAG 4123, Methods to Determine and Classify the Hazards of Ammunition, January 1975.

31. Private Communication from A. H. Lasseigne, 1971.

32. Duhon, J., Lasseigne, A., McKown, G., Pyrotechnic Transportation Rail Car Simulation Tests, Edgewood Arsenal Construction Report EM-CR-70456, March 1975.

33. Wilcox, W., Explosive Classification Testing of Pyrotechnic End Item Brown Ross Cartridges, Edgewood Arsenal Contractor Report EM-CR-76105 EA-3701, September 1976.

34. McKown, G.L., Effects of Confinement on Pyrotechnic Reaction Rate and Output Energy, Minutes of the 17th Explosives Safety Seminar, Department of Defense Explosive Safety Board.

35. McIntyre, F.L., Engineering Study of Jet Airmix Fire Suppression, Edgewood Arsenal Contractor Report, EM-CR-76012, EA-6103, August 1975 Revised October 1975.

36. McIntyre, F.L., Identification and Evaluation of Hazards Associated with Blending of Violet Smoke Mix by Jet "Airmix" Process, Edgewood Arsenal Contractor Report EM-CR-75001, EA-4091, March 1975.

37. McIntyre, F.L., Evaluation of Violet Smoke Initiation under Dynamic Conditions in the Jet "Airmix" Blender, Edgewood Arsenal Contractor Report EM-CR-77008 EA-5161, November 1976.

38. DoD Ammunition and Explosive Safety Standard, DOD 5154.45, January 1978.

39. Morris, L.T., Preliminary Hazards Fault Tree for HC White Smoke Grenade Manufacturing Process, Edgewood Arsenal Contractor Report, EA-5100C, May 1975.

40. Lasseigne, A.H., Electrostatic Hazard Evaluation of Pneumatic Dispersive Mixing Operation, Edgewood Arsenal Contractor Report, EA-FR-11 to 4, 1973.

41. Nestle, W.R., Formulation of Hazards Evaluation for Pyrotechnic Processes, Edgewood Arsenal Technical Report EA-4D11, September 1974.

42. King, P.V., and Koger, D.M., Pyrotechnic Hazards Classification and Evaluation Program Phase III, Segments 1-4, Investigation of Sensitivity Test Methods and Procedures for Pyrotechnic Hazards Evaluation and Classification, GE-MTSD-R-059, April 1971.

43. Small, T. and King, P.V., Pyrotechnic Hazards Classification and Evaluation Program, Contract NAS8-23523, Phase II, Segment 3 Final Report, Test Plan for Determining Hazards Associated with Pyrotechnic Manufacturing Process, Edgewood Arsenal Contractor Report GE-MTSD-ROJ4, January 1971.

44. McKown, G.L., and McIntyre, F.L., Frictional Stimuli Studies in Blending Operations, Edgewood Arsenal Contractor Report EM-EA-27R1, April 1977.

45. McKown, G.L., Investigation of Methods for Detection and Control of Pyrotechnic Dust Fires and Explosion, pp. 402-409, Sixth International Pyrotechnic Seminar, Denver Research Institute, 1978.

46. Lasseigne, A.H., unpublished Hartmann Test and Dust Gallery Testing, 1971-1974.

47. McIntyre, F.L., Classification Testing of Composition A5 and Selected Pyrotechnics, ARRADCOM Contractor Report AR-TSD-CR8003, June 1978.

48. McKown, G.L., TNT Equivalency of R284 Tracer Composition, I559 Igniter Mix, and I560 Subigniter Mix, ARRADCOM preliminary report August 1978.

49. McKown, G.L., Pyrotechnic Hazards Evaluation Program, paper presented to Pyrotechnics and Explosive Section, American Defense Preparedness Association, November 1976.

APPENDIX A

DATA SHEETS

NOMENCLATURE Stab Primer Mixture (1)

COMPOSITION:

Ingredients	Parts by wt.
Potassium Chlorate	45
Antimony Sulfide	22
Lead Thiocynate	33

DRAWING NUMBER:

PARAMETRIC:

Auto Ignition Temperature: 340 °C

Decomposition Temperature: 376 °C

Density:

Bulk g/cm^3

Loading 1.3-2.0 g/cm^3

Fuel Oxidizer Ratio: 1.22 :1

Gas Volume: 10-25 ml/g

Heat of Combustion: cal/g

Heat of Reaction: cal/g

STABILITY:

Hygroscopicity:

95 %

50 %

Generally considered to be hygroscopic

Thermal Stability:

Loss in wt. 0 %

Change in Configuration None

Vacuum Stability: 0.3 ml/gas/40hr

Weight Loss: %

REFERENCE/NOTES:

Pollard & Arnold

Ellern

SENSITIVITY:

Card Gap:

Detonation: Mushrooming

Electrical Spark: < 0.05 Joules

Electrostatic:

Minimum Concentration oz/ft^3

Minimum Energy Joules

Friction:

Steel Shoe Complete Detonation

Fiber Shoe

Other

Ignition & Unconfined Burning:

	EXPLODED		BURN TIME
Single Cube	Y	N	Sec
Multiple Cube	Y	N	Sec

Impact Sensitivity:

BoM cm

PA in

BoE < 3.750 in

Other: 56g wt 2.04 oz-in

OUTPUT:

Burn Time:

Density g/cm^3 sec/cm

Density g/cm^3 sec/cm

Density g/cm^3 sec/cm

Critical Diameter: > 0.05 meter

Critical Height: 5 cm

Pressure Time: psi/g

Time to Peak msec

High Explosive Equivalency:

PA Method %

Free Air Pipe Bomb %

Closed Chamber %

USE: Obsolete

APPLICATION: Stab Primer

STORAGE:

	NATO	DoD
Hazards Class (Q/D)	1.1	7
Compatibility		P

NOMENCLATURE Stab Primer Mixture (2)

COMPOSITION:

Ingredients	Parts by wt.
Lead Azide	5
Potassium Chlorate	53
Antimony Sulfide	17
Lead Thiocynate	25

DRAWING NUMBER: (PA-100)

PARAMETRIC:

Auto Ignition Temperature: 288·c

Decomposition Temperature: 310·c

Density:

Bulk g/cm^3

Loading 1.3-2.0 g/cm^3

Fuel Oxidizer Ratio: :1

Gas Volume: 10-25 ml/g

Heat of Combustion: cal/g

Heat of Reaction: cal/g

STABILITY:

Hygroscopicity:

95 %

50 %

Generally considered to be hygroscopic

Thermal Stability:

Loss in wt. 0 %

Change in Configuration None

Vacuum Stability: ~0.3 ml/gas/40hr

Weight Loss: %

REFERENCE/NOTES:

Ellern

Pollard & Arnold

AMCP 706-188

SENSITIVITY:

Card Gap:

Detonation: Mushrooming

Electrical Spark: 0.05 Joules

Electrostatic:

Minimum Concentration oz/ft^3

Minimum Energy Joules

Friction:

Steel Shoe Complete Detonation

Fiber Shoe Complete Detonation

Other

Ignition & Unconfined Burning:

	EXPLODED		BURN TIME
Single Cube	Y	N	Sec
Multiple Cube	Y	N	Sec

Impact Sensitivity:

BoM cm

PA in

BoE <3.75 in

Other: 12 oz ball 2.36 oz-in

OUTPUT:

Burn Time:

Density g/cm^3 sec/cm

Density g/cm^3 sec/cm

Density g/cm^3 sec/cm

Critical Diameter: meter

Critical Height: cm

Pressure Time: psi/g

Time to Peak msec

High Explosive Equivalency:

PA Method %

Free Air Pipe Bomb %

Closed Chamber %

USE:

M26 Primer Detonator

M45 Primer Detonator

M41 Primer Detonator

M56 Primer Detonator

APPLICATION: Stab Primer

STORAGE:

	NATO	DoD
Hazards Class (Q/D)	1.1	7
Compatibility		P

NOMENCLATURE Stab Mixture (3)

COMPOSITION:

Ingredients	Parts by wt.
Potassium Chlorate	33
Antimony Sulfide	33
Lead Azide	29
Carborundum	5

DRAWING NUMBER:

PARAMETRIC:

Auto Ignition Temperature: 301 °C

Decomposition Temperature: 327 °C

Density:

Bulk g/cm^3

Loading 1.3-2.0 g/cm^3

Fuel Oxidizer Ratio: 1.15 :1

Gas Volume: 10-25 ml/g

Heat of Combustion: cal/g

Heat of Reaction: cal/g

STABILITY:

Hygroscopicity:

95 %

50 %

Generally considered to be hygroscopic

Thermal Stability:

Loss in wt. 0 %

Change in Configuration None

Vacuum Stability: ~0.3 ml/gas/40hr

Weight Loss: %

REFERENCE/NOTES:

Pollard & Arnold
AMCP 706-188

SENSITIVITY:

Card Gap:

Detonation: Mushrooming

Electrical Spark: < 0.05 Joules

Electrostatic:

Minimum Concentration oz/ft^3

Minimum Energy Joules

Friction:

Steel Shoe Complete Detonation

Fiber Shoe Complete Detonation

Other

Ignition & Unconfined Burning:

	EXPLODED		BURN TIME
Single Cube	Y	N	Sec
Multiple Cube	Y	N	Sec

Impact Sensitivity:

BoM cm

PA in

BoE <3.75 in

Other: 56g wt 5.04 oz-in

OUTPUT:

Burn Time:

Density g/cm^3 sec/cm

Density g/cm^3 sec/cm

Density g/cm^3 sec/cm

Critical Diameter: >0.05 meter

Critical Height: 5 cm

Pressure Time: psi/g

Time to Peak msec

High Explosive Equivalency:

PA Method %

Free Air Pipe Bomb %

Closed Chamber %

USE:

APPLICATION: Stab Primer Mixture

STORAGE:

	NATO	DoD
Hazards Class (Q/D)	1.1	7
Compatibility		P

NOMENCLATURE Stab Mixture (4)

COMPOSITION:

Ingredients	Parts by wt.
Lead Azide	20
Basic Lead Styphnate	40
Tetracene	5
Barium Nitrate	20
Antinomy Sulfide	15

DRAWING NUMBER: (NOL-130)

PARAMETRIC:

Auto Ignition Temperature: 274 °C

Decomposition Temperature: 280 °C

Density:
Bulk g/cm^3
Loading 1.85 g/cm^3

Fuel Oxidizer Ratio: 0.75 :1

Gas Volume: 10-25 ml/g

Heat of Combustion: cal/g

Heat of Reaction: cal/g

STABILITY:

Hygroscopicity:
95 %
50 %

Generally considered to be hygroscopic

Thermal Stability:
Loss in wt. 0 %
Change in Configuration None

Vacuum Stability: 0.3 ml/gas/40hr

Weight Loss: %

REFERENCE/NOTES:

Ellern
Ewing & Cabbage

SENSITIVITY:

Card Gap:

Detonation: Mushrooming

Electrical Spark: 0.0022 Joules

Electrostatic:
Minimum Concentration 3.70g/M^3 oz/ft^3
Minimum Energy 0.0028 Joules

Friction:
Steel Shoe Complete Detonation
Fiber Shoe Complete Detonation
Other 0.5×10^8/0.3 N/M^2 @ 5 MSec

Ignition & Unconfined Burning:

	EXPLODED		BURN TIME
Single Cube	Y	N	Sec
Multiple Cube	Y	N	Sec

Impact Sensitivity:
BoM cm
PA in
BoF <3.75 in

Other: 2 oz ball 0.77 oz-in

OUTPUT:

Burn Time:
Density g/cm^3 sec/cm
Density g/cm^3 sec/cm
Density g/cm^3 sec/cm

Critical Diameter: meter

Critical Height: cm

Pressure Time: psi/g
Time to Peak msec

High Explosive Equivalency:
PA Method %
Free Air Pipe Bomb %
Closed Chamber %

USE: MK102 Mod 1, Primer
M45 Primer
M47 Detonation
M55 Stab Detonator

APPLICATION: Stab Primer

STORAGE:

	NATO	DoD
Hazards Class (Q/D)	1.1	7
Compatibility		P

NOMENCLATURE Percussion Primer Mixture (1)

COMPOSITION:

Ingredients	Parts by wt.
Potassium Chlorate	50
Antinomy Sulfide	20
Lead Peroxide	25
TNT	5

DRAWING NUMBER: 8797787 (M42)

PARAMETRIC:

Auto Ignition Temperature: 188 °C

Decomposition Temperature: 216 °C

Density:

Bulk g/cm^3

Loading 1.56 g/cm^3

Fuel Oxidizer Ratio: 0.27 :1

Gas Volume: 5-10 ml/g

Heat of Combustion: cal/g

Heat of Reaction: cal/g

STABILITY:

Hygroscopicity:

95 %

50 %

Generally considered to be hygroscopic

Thermal Stability:

Loss in wt. 0%

Change in Configuration None

Vacuum Stability: ml/gas/40hr

Weight Loss: %

REFERENCE/NOTES:

Ellern
Pollard & Arnold
J. Bently & P. Elischer

SENSITIVITY:

Card Gap:

Detonation:

Electrical Spark: <0.05 Joules

Electrostatic:

Minimum Concentration oz/ft^3

Minimum Energy Joules

Friction:

Steel Shoe Complete Detonation

Fiber Shoe Complete Detonation

Other

Ignition & Unconfined Burning:

	EXPLODED		BURN TIME
Single Cube	Y	N	Sec
Multiple Cube	Y	N	Sec

Impact Sensitivity:

BoM cm

PA in

BoE <3.75 in

Other: 56g drop wt 119 mj

OUTPUT:

Burn Time:

Density g/cm^3 sec/cm

Density g/cm^3 sec/cm

Density g/cm^3 sec/cm

Critical Diameter: meter

Critical Height: cm

Pressure Time: psi/g

Time to Peak msec

High Explosive Equivalency:

PA Method %

Free Air Pipe Bomb %

Closed Chamber %

USE: M42 Primer

APPLICATION: Initiate delay column

STORAGE:

	NATO	DoD
Hazards Class (Q/D)	1.1	7
Compatibility		P

NOMENCLATURE Percussion Primer Mixture (2)

COMPOSITION:

Ingredients	Parts by wt.
Basic Lead Styphnate	53
Tetracene	5
Barium Nitrate	22
Antinomy Sulfide	10
Powdered Aluminum	10

DRAWING NUMBER: (PA101)

PARAMETRIC:

Auto Ignition Temperature: 196 °C

Decomposition Temperature: 215 °C

Density:

Bulk g/cm^3

Loading 1.3-2.0 g/cm^3

Fuel Oxidizer Ratio: 0.91 :1

Gas Volume: 5-10 ml/g

Heat of Combustion: cal/g

Heat of Reaction: cal/g

STABILITY:

Hygroscopicity:

95 %

50 %

Generally considered to be hygroscopic

Thermal Stability:

Loss in wt. 0 %

Change in Configuration None

Vacuum Stability: ml/gas/40hr

Weight Loss: %

REFERENCE/NOTES:

AMCP 706-188

SENSITIVITY:

Card Gap:

Detonation:

Electrical Spark: < 0.05 Joules

Electrostatic:

Minimum Concentration oz/ft^3

Minimum Energy Joules

Friction:

Steel Shoe Complete Detonation

Fiber Shoe Complete Detonation

Other

Ignition & Unconfined Burning:

	EXPLODED		BURN TIME
Single Cube	Y	N	Sec
Multiple Cube	Y	N	Sec

Impact Sensitivity:

BoM		cm
PA		in
BoE	<3.75	in

OUTPUT:

Burn Time:

Density	g/cm^3	sec/cm
Density	g/cm^3	sec/cm
Density	g/cm^3	sec/cm

Critical Diameter: meter

Critical Height: cm

Pressure Time: psi/g

Time to Peak msec

High Explosive Equivalency:

PA Method %

Free Air Pipe Bomb %

Closed Chamber %

USE:

APPLICATION: Primary ignition mixture for delay columns

STORAGE:

	NATO	DoD
Hazards Class (Q/D)	1.1	7
Compatibility		P

NOMENCLATURE Percussion Primer Mixture (3)

COMPOSITION:

Ingredients	Parts by wt.
Basic Lead Styphnate	60
Tetracene	5
Barium Nitrate	25
Antimony Sulfide	10

DRAWING NUMBER: (NOL60)

PARAMETRIC:

Auto Ignition Temperature: 210 °C

Decomposition Temperature: 227 °C

Density:

Bulk g/cm^3

Loading 1.3-2.5 g/cm^3

Fuel Oxidizer Ratio: 0.4 :1

Gas Volume: 5-10 ml/g

Heat of Combustion: cal/g

Heat of Reaction: cal/g

STABILITY:

Hygroscopicity:

95 %

50 %

Generally considered to be hygroscopic

Thermal Stability:

Loss in wt. 0 %

Change in Configuration None

Vacuum Stability: ml/gas/40hr

Weight Loss: %

REFERENCE/NOTES:

Pollard & Arnold
Ellern
AMCP 706-188

SENSITIVITY:

Card Gap:

Detonation:

Electrical Spark: 0.0022 Joules

Electrostatic:

Minimum Concentration oz/ft^3

Minimum Energy Joules

Friction:

Steel Shoe Complete Detonation

Fiber Shoe Complete Detonation

Other $0.862 \times 10^8/0.3$ N/M^2

Ignition & Unconfined Burning:

	EXPLODED		BURN TIME
Single Cube	Y	N	Sec
Multiple Cube	Y	N	Sec

Impact Sensitivity:

BoM cm

PA in

BoE <3.75 in

OUTPUT:

Burn Time:

Density	g/cm^3	sec/cm
Density	g/cm^3	sec/cm
Density	g/cm^3	sec/cm

Critical Diameter: meter

Critical Height: cm

Pressure Time: psi/g

Time to Peak msec

High Explosive Equivalency:

PA Method %

Free Air Pipe Bomb %

Closed Chamber %

USE:

APPLICATION: Primary ignition source

STORAGE:

	NATO	DoD
Hazards Class (Q/D)	1.1	7
Compatibility		P

COMPOSITION:

Ingredients	Parts by wt.
Potassium Chlorate	37.05
Lead Thiocynate	38.18
Barium Nitrate	8.68
Ground Glass	10.45
TNT	5.69

DRAWING NUMBER: (M39)

PARAMETRIC:

Auto Ignition Temperature: 216 °C

Decomposition Temperature: 231 °C

Density:
- Bulk g/cm^3
- Loading 1.3-2.2 g/cm^3

Fuel Oxidizer Ratio: 1.06 :1

Gas Volume: 5-10 ml/g

Heat of Combustion: cal/g

Heat of Reaction: cal/g

STABILITY:

Hygroscopicity:
- 95 %
- 50 %

Generally considered to be hygroscopic

Thermal Stability:
- Loss in wt. 0 %
- Change in Configuration None

Vacuum Stability: ml/gas/40hr

Weight Loss: %

REFERENCE/NOTES:

TM 9-1910
AMCP 706-188

SENSITIVITY:

Card Gap: Detonation

Detonation: Detonation

Electrical Spark: < 0.05 Joules

Electrostatic:
- Minimum Concentration oz/ft^3
- Minimum Energy Joules

Friction:
- Steel Shoe Complete Detonation
- Fiber Shoe Complete Detonation
- Other

Ignition & Unconfined Burning:

	EXPLODED		BURN TIME
Single Cube	Y	N	Sec
Multiple Cube	Y	N	Sec

Impact Sensitivity:
- BoM cm
- PA in
- BoE < 3.75 in

OUTPUT:

Burn Time:
- Density g/cm^3 sec/cm
- Density g/cm^3 sec/cm
- Density g/cm^3 sec/cm

Critical Diameter: meter

Critical Height: cm

Pressure Time: psi/g
- Time to Peak msec

High Explosive Equivalency:
- PA Method %
- Free Air Pipe Bomb %
- Closed Chamber %

USE: M39

APPLICATION: Percussion Primer primary ignition source and fire transfer

STORAGE:

	NATO	DoD
Hazards Class (Q/D)	1.1	7
Compatibility		P

NOMENCLATURE Percussion Primer Mixture (5)

COMPOSITION:

Ingredients	Parts by wt.
Potassium Chlorate	53
Antimony Sulfide	17
Lead Thiocynate	25
TNT	5

DRAWING NUMBER: 8798312 (FA70)

PARAMETRIC:

Auto Ignition Temperature: 201 °c

Decomposition Temperature: 216 °c

Density:

Bulk g/cm^3

Loading 1.3-2.4 g/cm^3

Fuel Oxidizer Ratio: 0.79 :1

Gas Volume: 5-10 ml/g

Heat of Combustion: cal/g

Heat of Reaction: cal/g

STABILITY:

Hygroscopicity:

95 %

50 %

Poor

Thermal Stability:

Loss in wt. 0%

Change in Configuration None

Vacuum Stability: ml/gas/40hr

Weight Loss: %

REFERENCE/NOTES:

AMCP 706-188
Pollard & Arnold
Ellern
TM 9-1910
AMCP 706-179
Davis, Tenny L

SENSITIVITY:

Card Gap: Detonation

Detonation: Complete Detonation

Electrical Spark: < 0.05 Joules

Electrostatic:

Minimum Concentration oz/ft^3

Minimum Energy Joules

Friction:

Steel Shoe Complete Detonation

Fiber Shoe Complete Detonation

Other

Ignition & Unconfined Burning:

	EXPLODED		BURN TIME
Single Cube	Y	N	Sec
Multiple Cube	Y	N	Sec

Impact Sensitivity:

BoM cm

PA in

BoE < 3.75 in

OUTPUT:

Burn Time:

Density g/cm^3 sec/cm

Density g/cm^3 sec/cm

Density g/cm^3 sec/cm

Critical Diameter: meter

Critical Height: cm

Pressure Time: psi/g

Time to Peak msec

High Explosive Equivalency:

PA Method %

Free Air Pipe Bomb %

Closed Chamber %

USE: M29

Winchester #8.5 commercial primer

APPLICATION: Primary ignition source

STORAGE:

	NATO	DoD
Hazards Class (Q/D)	1.1	7
Compatibility		P

NOMENCLATURE Percussion Primer Mixture (6)

COMPOSITION:

Ingredients	Parts by wt.
Lead Oxide	85.5
Boron	9.5
Tetracene	5.0

DRAWING NUMBER:

PARAMETRIC:

Auto Ignition Temperature: 227 °C

Decomposition Temperature: 235 °C

Density:
- Bulk 1.17 g/cm^3
- Loading 1.56 g/cm^3

Fuel Oxidizer Ratio: 0.17 :1

Gas Volume: 0.1-0.2 ml/g

Heat of Combustion: cal/g

Heat of Reaction: cal/g

STABILITY:

Hygroscopicity:
- 95 %
- 50 %

Thermal Stability:
- Loss in wt. 0 %
- Change in Configuration None

Vacuum Stability: ml/gas/40hr

Weight Loss: %

REFERENCE/NOTES:

J. Bently and P. Elischer

SENSITIVITY:

Card Gap:

Detonation:

Electrical Spark: < 0.05 Joules

Electrostatic:
- Minimum Concentration oz/ft^3
- Minimum Energy Joules

Friction:
- Steel Shoe Complete Detonation
- Fiber Shoe Complete Detonation
- Other

Ignition & Unconfined Burning:

	EXPLODED		BURN TIME
Single Cube	Y	N	Sec
Multiple Cube	Y	N	Sec

Impact Sensitivity:
- BoM cm
- PA in
- BoE < 3.75 in

Other: 56g wt 117 mj

OUTPUT:

Burn Time:
- Density g/cm^3 sec/cm
- Density g/cm^3 sec/cm
- Density g/cm^3 sec/cm

Critical Diameter: meter

Critical Height: cm

Pressure Time: psi/g
- Time to Peak msec

High Explosive Equivalency:
- PA Method %
- Free Air Pipe Bomb %
- Closed Chamber %

USE: Experimental mixture to replace M42

APPLICATION: Prime initiating mixture

STORAGE:

	NATO	DoD
Hazards Class (Q/D)	1.1	7
Compatibility		P

NOMENCLATURE Percussion Primer Mixture (7)

COMPOSITION:

Ingredients	Parts by wt.
Lead Styphnate	35
Tetracene	3.1
Berium Nitrate	31
Antimony Sulfide	10.3
Powdered Zirconium	10.3
Lead Dioxide	10.3

DRAWING NUMBER: (FA959)

PARAMETRIC:

Auto Ignition Temperature: 199 °C

Decomposition Temperature: 209 °C

Density:
Bulk 1.3-2.3 g/cm^3
Loading g/cm^3

Fuel Oxidizer Ratio: 0.5 :1

Gas Volume: 5-10 ml/g

Heat of Combustion: cal/g

Heat of Reaction: cal/g

STABILITY:

Hygroscopicity:
95 %
50 %

Thermal Stability:
Loss in wt. %
Change in Configuration

Vacuum Stability: ml/gas/40hr

Weight Loss: %

REFERENCE/NOTES:

AMCP 706-188
Ellern

SENSITIVITY:

Card Gap: Detonation

Detonation: Complete Detonation

Electrical Spark: <0.05 Joules

Electrostatic:
Minimum Concentration oz/ft^3
Minimum Energy Joules

Friction:
Steel Shoe Complete Detonation
Fiber Shoe Complete Detonation
Other

Ignition & Unconfined Burning:

	EXPLODED		BURN TIME
Single Cube	Y	N	Sec
Multiple Cube	Y	N	Sec

Impact Sensitivity:
BoM cm
PA in
BoE <3.75 in

OUTPUT:

Burn Time:
Density g/cm^3 sec/cm
Density g/cm^3 sec/cm
Density g/cm^3 sec/cm

Critical Diameter: meter

Critical Height: cm

Pressure Time: psi/g
Time to Peak msec

High Explosive Equivalency:
PA Method %
Free Air Pipe Bomb %
Closed Chamber %

USE:

APPLICATION: Percussion Primer

STORAGE:

	NATO	DoD
Hazards Class (Q/D)	1.1	7
Compatibility		P

NOMENCLATURE Percussion Primer Mixture (8)

COMPOSITION:

Ingredients	Parts by wt.
Potassium Chlorate	35
Lead Thiocynate	17
Antimony Sulfide	30
Calcium Silicide	15
TNT	3

DRAWING NUMBER:

PARAMETRIC:

Auto Ignition Temperature: 204 °C

Decomposition Temperature: 224 °C

Density:
- Bulk 1.4-2.4 g/cm^3
- Loading g/cm^3

Fuel Oxidizer Ratio: 1.34 :1

Gas Volume: 5-10 ml/g

Heat of Combustion: cal/g

Heat of Reaction: cal/g

STABILITY:

Hygroscopicity:
- 95 %
- 50 %

Thermal Stability: Poor
- Loss in wt. 0 %
- Change in Configuration None

Vacuum Stability: ml/gas/40hr

Weight Loss: %

REFERENCE/NOTES:

TM 9-1910

SENSITIVITY:

Card Gap: Detonation

Detonation: Complete Detonation

Electrical Spark: <0.05 Joules

Electrostatic:
- Minimum Concentration oz/ft^3
- Minimum Energy Joules

Friction:
- Steel Shoe Complete Detonation
- Fiber Shoe Complete Detonation
- Other

Ignition & Unconfined Burning:

	EXPLODED		BURN TIME
Single Cube	Y	N	Sec
Multiple Cube	Y	N	Sec

Impact Sensitivity:
- BoM cm
- PA in
- BoE <3.75 in

OUTPUT:

Burn Time:
- Density g/cm^3 sec/cm
- Density g/cm^3 sec/cm
- Density g/cm^3 sec/cm

Critical Diameter: meter

Critical Height: cm

Pressure Time: psi/g
- Time to Peak msec

High Explosive Equivalency:
- PA Method %
- Free Air Pipe Bomb %
- Closed Chamber %

USE:

APPLICATION: Percussion Primer

STORAGE:

	NATO	DoD
Hazards Class (Q/D)	1.1	7
Compatibility		P

NOMENCLATURE Percussion Primer Mixture (9)

COMPOSITION:

Ingredients	Parts by wt.
Normal Lead Styphnate	36
Tetracene	12
Barium Nitrate	22
Lead Dioxide	9
Antimony Sulfide	7
Zirconium	9
Petn	5

DRAWING NUMBER: (FA982)

PARAMETRIC:

Auto Ignition Temperature: 240 °C

Decomposition Temperature: 262 °C

Density:

Bulk g/cm^3

Loading 1.4-2.4 g/cm^3

Fuel Oxidizer Ratio: 0.52 :1

Gas Volume: 5-10 ml/g

Heat of Combustion: cal/g

Heat of Reaction: cal/g

STABILITY:

Hygroscopicity:

95 %

50 %

Poor

Thermal Stability:

Loss in wt. 0 %

Change in Configuration None

Vacuum Stability: ml/gas/40hr

Weight Loss: 11.94 %

REFERENCE/NOTES:

SENSITIVITY:

Card Gap: Detonation

Detonation: Complete Detonation

Electrical Spark: <0.05 Joules

Electrostatic:

Minimum Concentration oz/ft^3

Minimum Energy Joules

Friction:

Steel Shoe Complete Detonation

Fiber Shoe Complete Detonation

Other

Ignition & Unconfined Burning:

	EXPLODED		BURN TIME
Single Cube	Y	N	Sec
Multiple Cube	Y	N	Sec

Impact Sensitivity:

BoM cm

PA in

BoE <3.75 in

OUTPUT:

Burn Time:

Density g/cm^3 sec/cm

Density g/cm^3 sec/cm

Density g/cm^3 sec/cm

Critical Diameter: meter

Critical Height: cm

Pressure Time: psi/g

Time to Peak msec

High Explosive Equivalency:

PA Method %

Free Air Pipe Bomb %

Closed Chamber %

USE:

APPLICATION: Percussion Primer Mixture

STORAGE:

	NATO	DoD
Hazards Class (Q/D)	1.1	7
Compatibility		P

NOMENCLATURE Percussion Primer Mixture (10)

COMPOSITION:

Ingredients	Parts by wt.
Normal Lead Styphnate	37
Tetracene	4
Barium Nitrate	32
Antimony Sulfide	15
Aluminum	7
Petn	5
Gum Arabic*	0.2

*105 ml of 1% soln used per 3500 g

DRAWING NUMBER: (FA956)

PARAMETRIC:

Auto Ignition Temperature: 184 °C

Decomposition Temperature: 193 °C

Density:
Bulk g/cm^3
Loading 1.3-2.4 g/cm^3

Fuel Oxidizer Ratio: 0.69 :1

Gas Volume: 5-10 ml/g

Heat of Combustion: cal/g

Heat of Reaction: cal/g

STABILITY:

Hygroscopicity:
95 %
50 %
Poor

Thermal Stability:
Loss in wt. 0.9 %
Change in Configuration None

Vacuum Stability: ml/gas/40hr

Weight Loss: 11.2 %

REFERENCE/NOTES:

SENSITIVITY:

Card Gap: Detonation

Detonation: Complete Detonation

Electrical Spark: Joules

Electrostatic:
Minimum Concentration oz/ft^3
Minimum Energy Joules

Friction:
Steel Shoe Complete Detonation
Fiber Shoe Complete Detonation
Other

Ignition & Unconfined Burning:

	EXPLODED		BURN TIME
Single Cube	Y	N	Sec
Multiple Cube	Y	N	Sec

Impact Sensitivity:
BoM cm
PA in
BoE < 3.75 in

Other: 453g wt 56 oz-in

OUTPUT:

Burn Time:
Density g/cm^3 sec/cm
Density g/cm^3 sec/cm
Density g/cm^3 sec/cm

Critical Diameter: meter

Critical Height: cm

Pressure Time: psi/g
Time to Peak msec

High Explosive Equivalency:
PA Method %
Free Air Pipe Bomb %
Closed Chamber %

USE:

APPLICATION: Percussion Primer

STORAGE:

	NATO	DoD
Hazards Class (Q/D)	1.1	7
Compatibility		P

COMPOSITION:

Ingredients	Parts by wt.
Potassium Perchlorate	50
Zirconium	50

DRAWING NUMBER:

PARAMETRIC:

Auto Ignition Temperature: 402 °C

Decomposition Temperature: 411 °C

Density:
- Bulk g/cm^3
- Loading 2.2-3.0 g/cm^3

Fuel Oxidizer Ratio: 1 :1

Gas Volume: ml/g

Heat of Combustion: cal/g

Heat of Reaction: cal/g

STABILITY:

Hygroscopicity:
- 95 %
- 50 %

Thermal Stability:
- Loss in wt. 0 %
- Change in Configuration None

Vacuum Stability: ml/gas/40hr

Weight Loss: %

REFERENCE/NOTES:

See on ten results

SENSITIVITY:

Card Gap: Detonation

Detonation: Complete Detonation

Electrical Spark: < 0.05 Joules

Electrostatic:
- Minimum Concentration oz/ft^3
- Minimum Energy Joules

Friction:
- Steel Shoe Complete Detonation
- Fiber Shoe
- Other

Ignition & Unconfined Burning:

	EXPLODED		BURN TIME
Single Cube	Y	NX	< 2 Sec
Multiple Cube	Y	NX	< 2 Sec

Impact Sensitivity:
- BoM cm
- PA in
- BoE < 3.75 in

OUTPUT:

Burn Time:
- Density g/cm^3 0.4 sec/cm
- Density g/cm^3 sec/cm
- Density g/cm^3 sec/cm

Critical Diameter: meter

Critical Height: cm

Pressure Time: psi/g

Time to Peak msec

High Explosive Equivalency:
- PA Method %
- Free Air Pipe Bomb %
- Closed Chamber %

USE: Experimental mixture

APPLICATION: Initiation of delay column

STORAGE:

	NATO	DoD
Hazards Class (Q/D)	1.1	7
Compatibility		P

NOMENCLATURE Electric Primer Mixture (1)

COMPOSITION:

Ingredients	Parts by wt.
Potassium Chlorate	8.5
Lead Mononitro Resorcinate	76.5
Nitrocellulose (½ sec-dry base)	15.0

DRAWING NUMBER:

PARAMETRIC:

Auto Ignition Temperature: 244 °C

Decomposition Temperature: 296 °C

Density:
- Bulk g/cm^3
- Loading 1.9-2.6 g/cm^3

Fuel Oxidizer Ratio: 9:1

Gas Volume: ml/g

Heat of Combustion: cal/g

Heat of Reaction: cal/g

STABILITY:

Hygroscopicity:
- 95 26.6%
- 50 0.19%

Thermal Stability:
- Loss in wt. 1.8 %
- Change in Configuration None

Vacuum Stability: 0.22 ml/gas/40hr

Weight Loss: %

REFERENCE/NOTES:

Ellern

SENSITIVITY:

Card Gap: No Detonation

Detonation: Slight Mushrooming

Electrical Spark: < 0.05 Joules

Electrostatic:
- Minimum Concentration oz/ft^3
- Minimum Energy Joules

Friction:
- Steel Shoe Complete Detonation
- Fiber Shoe
- Other

Ignition & Unconfined Burning:

	EXPLODED		BURN TIME
Single Cube	Y	NX	< 2 Sec
Multiple Cube	Y	NX	< 2 Sec

Impact Sensitivity:
- BoM cm
- PA in
- BoE < 3.75 in

OUTPUT:

Burn Time:
- Density g/cm^3 < 0.4 sec/cm
- Density g/cm^3 sec/cm
- Density g/cm^3 sec/cm

Critical Diameter: meter

Critical Height: cm

Pressure Time: psi/g
- Time to Peak msec

High Explosive Equivalency:
- PA Method %
- Free Air Pipe Bomb %
- Closed Chamber %

USE: Electric matches

APPLICATION: Primary fire transfer

STORAGE:

	NATO	DoD
Hazards Class (Q/D)	1.1	7
Compatibility		P

NOMENCLATURE Electric Primer Mixer (2)

COMPOSITION:

Ingredients	Parts by wt.
Potassium Chlorate	55
Lead Thiocynate	45

DRAWING NUMBER:

PARAMETRIC:

Auto Ignition Temperature: 203 °C

Decomposition Temperature: 240 °C

Density:
Bulk g/cm^3
Loading 1.6-2.2 g/cm^3

Fuel Oxidizer Ratio: 0.82 :1

Gas Volume: 25 ml/g

Heat of Combustion: cal/g

Heat of Reaction: cal/g

STABILITY:

Hygroscopicity:
95 %
50 %

Thermal Stability:
Loss in wt. 1.6 %
Change in Configuration None

Vacuum Stability: 0.3 ml/gas/40hr

Weight Loss: %

REFERENCE/NOTES:

Ellern

SENSITIVITY:

Card Gap: No Detonation

Detonation: Slight Mushrooming

Electrical Spark: <0.05 Joules

Electrostatic:
Minimum Concentration oz/ft^3
Minimum Energy Joules

Friction:
Steel Shoe Complete Detonation
Fiber Shoe
Other

Ignition & Unconfined Burning:

	EXPLODED		BURN TIME
Single Cube	Y	N X	<2 Sec
Multiple Cube	Y	N X	<2 Sec

Impact Sensitivity:
BoM cm
PA in
BoE <3.75 in

OUTPUT:

Burn Time:
Density g/cm^3 <0.4 sec/cm
Density g/cm^3 sec/cm
Density g/cm^3 sec/cm

Critical Diameter: 0.05 meter

Critical Height: 5 cm

Pressure Time: psi/g
Time to Peak msec

High Explosive Equivalency:
PA Method %
Free Air Pipe Bomb %
Closed Chamber %

USE: M59

APPLICATION: Nondetonating fire transfer

STORAGE:

	NATO	DoD
Hazards Class (Q/D)	1.1	7
Compatibility		P

NOMENCLATURE Electric Primer Mixture (3)

COMPOSITION:

Ingredients	Parts by wt.
Potassium Chlorate	25
Diazodnitrophenol (DDNP)	75

DRAWING NUMBER:

PARAMETRIC:

Auto Ignition Temperature: 396 °C

Decomposition Temperature: 451 °C

Density:

Bulk g/cm^3

Loading 1.6-2.2 g/cm^3

Fuel Oxidizer Ratio: 3 :1

Gas Volume: 148 ml/g

Heat of Combustion: 2960 cal/g

Heat of Reaction: 1325 cal/g

STABILITY:

Hygroscopicity:

95 11.02 %

50 0.09 %

Thermal Stability:

Loss in wt. 0 %

Change in Configuration None

Vacuum Stability: 0.26 ml/gas/40hr

Weight Loss: %

REFERENCE/NOTES:

Ellern

SENSITIVITY:

Card Gap: Detonation

Detonation: Mushrooming

Electrical Spark: < 0.05 Joules

Electrostatic:

Minimum Concentration oz/ft^3

Minimum Energy Joules

Friction:

Steel Shoe Complete Detonation

Fiber Shoe

Other

Ignition & Unconfined Burning:

	EXPLODED		BURN TIME
Single Cube	Y	NX	2 Sec
Multiple Cube	Y	NX	2 Sec

Impact Sensitivity:

BoM cm

PA in

BoE < 3.75 in

OUTPUT:

Burn Time:

Density g/cm^3 0.4 sec/cm

Density g/cm^3 sec/cm

Density g/cm^3 sec/cm

Critical Diameter: 0.05 meter

Critical Height: 5 cm

Pressure Time: psi/g

Time to Peak msec

High Explosive Equivalency:

PA Method %

Free Air Pipe Bomb %

Closed Chamber %

USE: MK1 Mod 0

APPLICATION: Electric primer mixture

STORAGE:

	NATO	DoD
Hazards Class (Q/D)	1.1	7
Compatibility		P

NOMENCLATURE Electric Primer Mixture (4)

COMPOSITION:

Ingredients	Parts by wt.
Potassium Chlorate	60
Diazodnitrophenol (DDNP)	20
Charcoal	15
Nitrostarch	5

DRAWING NUMBER:

PARAMETRIC:

Auto Ignition Temperature: 396 °C

Decomposition Temperature: 442 °C

Density:

Bulk g/cm^3

Loading 1.6-2.4 g/cm^3

Fuel Oxidizer Ratio: 0.25:1

Gas Volume: 96 ml/g

Heat of Combustion: 2296 cal/g

Heat of Reaction: 1473 cal/g

STABILITY:

Hygroscopicity:

95 33.6 %

50 0.17 %

Thermal Stability:

Loss in wt. 0 %

Change in Configuration None

Vacuum Stability: 0.18 ml/gas/40hr

Weight Loss: %

REFERENCE/NOTES:

Ellern

SENSITIVITY:

Card Gap: Detonation

Detonation: Mushrooming

Electrical Spark: < 0.05 Joules

Electrostatic:

Minimum Concentration oz/ft^3

Minimum Energy Joules

Friction:

Steel Shoe Complete Detonation

Fiber Shoe

Other

Ignition & Unconfined Burning:

	EXPLODED		BURN TIME
Single Cube	Y	N X	Sec
Multiple Cube	Y	N X	Sec

Impact Sensitivity:

BoM cm

PA in

BoE < 3.75 in

OUTPUT:

Burn Time:

Density g/cm^3 sec/cm

Density g/cm^3 sec/cm

Density g/cm^3 sec/cm

Critical Diameter: 0.05 meter

Critical Height: 5 cm

Pressure Time: psi/g

Time to Peak msec

High Explosive Equivalency:

PA Method %

Free Air Pipe Bomb %

Closed Chamber %

USE:

APPLICATION: Electric Primer Mixture
Combined prime ignition and fire transfer

STORAGE:

	NATO	DoD
Hazards Class (Q/D)	1.1	7
Compatibility		P

NOMENCLATURE Electric Primer Mixture (5)

COMPOSITION:

Ingredients	Parts by wt.
Titanium	33.3
Potassium Perchlorate	66.7

DRAWING NUMBER: 55-308278

PARAMETRIC:

Auto Ignition Temperature: 475 °C

Decomposition Temperature: 486 °C

Density:
- Bulk: 1.9 g/cm^3
- Loading: 2.16-2.36 g/cm^3

Fuel Oxidizer Ratio: 0.5:1

Gas Volume: 286 ml/g

Heat of Combustion: 1900 cal/g

Heat of Reaction: cal/g

STABILITY:

Hygroscopicity:
- 95 %
- 50 0.01 %

Thermal Stability:
- 2
- Loss in wt. 0 %
- Change in Configuration None

Vacuum Stability: 0.013 ml/gas/40hr

Weight Loss: 0.21 %

REFERENCE/NOTES:

McIntyre
Koger
McKown-McIntyre
Chong

SENSITIVITY:

Card Gap: Detonation

Detonation: Complete Detonation

Electrical Spark: 0.005 Joules

Electrostatic:
- Minimum Concentration 0.325 oz/ft^3
- Minimum Energy 1 Joules

Friction:
- Steel Shoe Complete Detonation
- Fiber Shoe
- Other

Ignition & Unconfined Burning:

	EXPLODED		BURN TIME
Single Cube	Y	NX	0.625 Sec
Multiple Cube	Y	NX	Sec

Impact Sensitivity:
- BoM cm
- PA in
- BoE 10 in

OUTPUT:

Burn Time:

Density		g/cm^3	sec/cm
Density	2.26	g/cm^3	.0045 sec/cm
Density		g/cm^3	sec/cm

Critical Diameter: 0.02 meter

Critical Height: 1.5 cm

Pressure Time: 65 psi/g

- Time to Peak 28 msec

High Explosive Equivalency:

PA Method	%
Free Air Pipe Bomb	50 %
Closed Chamber	32 %

USE: Miniature pyrotechnic igniter

APPLICATION: Exploding Bridgewire primary initiating charge

STORAGE:

	NATO	DoD
Hazards Class (Q/D)	1.1	7
Compatibility		P

NOMENCLATURE Electric Primer Mixture (6)

COMPOSITION:

Ingredients	Parts by wt.
Aluminum	33.3
Potassium Perchlorate	66.7

DRAWING NUMBER:

PARAMETRIC:

Auto Ignition Temperature: 446 °C

Decomposition Temperature: 465 °C

Density:
- Bulk: 0.6 g/cm^3
- Loading: 2.2-2.6 g/cm^3

Fuel Oxidizer Ratio: 0.5:1

Gas Volume: 150 ml/g

Heat of Combustion: cal/g

Heat of Reaction: cal/g

STABILITY:

Hygroscopicity:
- 95 %
- 50 0.01 %

Thermal Stability:
- Loss in wt. 0%
- Change in Configuration None

Vacuum Stability: < 0.01 ml/gas/40hr

Weight Loss: 0.01 %

REFERENCE/NOTES:

McIntyre & MNRS
5th International Pyrotechnic Seminar

SENSITIVITY:

Card Gap: Complete Detonation

Detonation: Complete Detonation

Electrical Spark: 0.0625 Joules

Electrostatic:
- Minimum Concentration 0.18 oz/ft^3
- Minimum Energy .005 Joules

Friction:
- Steel Shoe Complete Detonation
- Fiber Shoe
- Other

Ignition & Unconfined Burning:

	EXPLODED		BURN TIME	
Single Cube	Y	NX	0.720	Sec
Multiple Cube	Y	NX		Sec

Impact Sensitivity:
- BoM cm
- PA in
- BoE 12 in

OUTPUT:

Burn Time:
- Density 0.61 g/cm^3 0.016 sec/cm
- Density g/cm^3 sec/cm
- Density g/cm^3 sec/cm

Critical Diameter: 0.02 meter

Critical Height: 1.5 cm

Pressure Time:
- 94 psi/g
- Time to Peak 40 msec

High Explosive Equivalency:
- PA Method %
- Free Air Pipe Bomb 50 %
- Closed Chamber %

USE: Miniature pyrotechnic ignitor

APPLICATION: Exploding bridgewire primary

STORAGE:

	NATO	DoD
Hazards Class (Q/D)	1.1	7
Compatibility		P

NOMENCLATURE Friction Primer Mixture (1)

COMPOSITION:

Ingredients	Parts by wt.
Potassium Chlorate	63
Antimony Sulfide	32
Gum Arabic	5

DRAWING NUMBER:

PARAMETRIC:

Auto Ignition Temperature: 152 °C

Decomposition Temperature: 165 °C

Density:
- Bulk g/cm^3
- Loading 0.9-1.3 g/cm^3

Fuel Oxidizer Ratio: 0.51:1

Gas Volume: ml/g

Heat of Combustion: cal/g

Heat of Reaction: cal/g

STABILITY:

Hygroscopicity:
- 95 43 %
- 50 1.1 %

Thermal Stability:
- Loss in wt. 1.3 %
- Change in Configuration None

Vacuum Stability: 0.14 ml/gas/40hr

Weight Loss: 4.3 %

REFERENCE/NOTES:

AMCP 706-188
Pollard & Arnold

SENSITIVITY:

Card Gap: No Detonation

Detonation: Slight Mushrooming

Electrical Spark: < 0.05 Joules

Electrostatic:
- Minimum Concentration oz/ft^3
- Minimum Energy Joules

Friction:
- Steel Shoe Complete Burning
- Fiber Shoe Complete Burning
- Other

Ignition & Unconfined Burning:

	EXPLODED		BURN TIME
Single Cube	Y	NX	1.7 Sec
Multiple Cube	Y	NX	2.1 Sec

Impact Sensitivity:
- BoM cm
- PA in
- BoE < 3.75 in

OUTPUT:

Burn Time:
- Density g/cm^3 sec/cm
- Density g/cm^3 sec/cm
- Density g/cm^3 sec/cm

Critical Diameter: 0.05 meter

Critical Height: 5 cm

Pressure Time: psi/g

- Time to Peak msec

High Explosive Equivalency:
- PA Method %
- Free Air Pipe Bomb %
- Closed Chamber %

USE:

APPLICATION: Friction Primer Mixture

STORAGE:

	NATO	DoD
Hazards Class (Q/D)	1.1	7
Compatibility		P

NOMENCLATURE Friction Primer Mixture (2)

COMPOSITION:

Ingredients	Parts by wt.
Potassium Chlorate	53
Antimony Sulfide	22
Sulfur	9
Calcium Carbonate	1
Ground Glass	10
Gum Arabic	5

DRAWING NUMBER:

PARAMETRIC:

Auto Ignition Temperature: 137 °C

Decomposition Temperature: 152 °C

Density:
- Bulk g/cm^3
- Loading 0.85-1.3 g/cm^3

Fuel Oxidizer Ratio: 0.58:1

Gas Volume: ml/g

Heat of Combustion: cal/g

Heat of Reaction: cal/g

STABILITY:

Hygroscopicity:
- 95 33.1 %
- 50 0.16 %

Thermal Stability:
- Loss in wt. 1.08 %
- Change in Configuration None

Vacuum Stability: ml/gas/40hr

Weight Loss: 1.1%

REFERENCE/NOTES:

AMCP 706-188
Pollard & Arnold

SENSITIVITY:

Card Gap: No Detonation

Detonation: No Detonation

Electrical Spark: <0.05 Joules

Electrostatic:
- Minimum Concentration oz/ft^3
- Minimum Energy Joules

Friction:
- Steel Shoe Complete Burning
- Fiber Shoe Complete Burning
- Other

Ignition & Unconfined Burning:

	EXPLODED		BURN TIME	
Single Cube	Y	NX	2.7	Sec
Multiple Cube	Y	NX	3.9	Sec

Impact Sensitivity:
- BoM cm
- PA in
- BoE <3.75 in

OUTPUT:

Burn Time:
- Density g/cm^3 sec/cm
- Density g/cm^3 sec/cm
- Density g/cm^3 sec/cm

Critical Diameter: meter

Critical Height: cm

Pressure Time: psi/g

Time to Peak msec

High Explosive Equivalency:
- PA Method %
- Free Air Pipe Bomb %
- Closed Chamber %

USE:

APPLICATION: Friction Primer Mix

STORAGE:

	NATO	DoD
Hazards Class (Q/D)	1.1	7
Compatibility		P

NOMENCLATURE Friction Primer Mixture (3)

COMPOSITION:

Ingredients	Parts by wt.
Potassium Chlorate	42
Antimony Sulfide	42
Sulfer	3
Calcium Carbonate	2
Meal Powder	3
Ground Glass	3
Gum Arabic	5

DRAWING NUMBER:

PARAMETRIC:

Auto Ignition Temperature: 139 °C

Decomposition Temperature: 152 °C

Density:

Bulk g/cm^3

Loading 0.8-1.3 g/cm^3

Fuel Oxidizer Ratio: 1.02:1

Gas Volume: ml/g

Heat of Combustion: cal/g

Heat of Reaction: cal/g

STABILITY:

Hygroscopicity:

95 27.1 %

50 0.19 %

Thermal Stability:

Loss in wt. 0.98 %

Change in Configuration None

Vacuum Stability: 0.11 ml/gas/40hr

Weight Loss: 1.02%

REFERENCE/NOTES:

Pollard and Arnold

SENSITIVITY:

Card Gap: No Detonation

Detonation: No Detonation

Electrical Spark: <0.05 Joules

Electrostatic:

Minimum Concentration oz/ft^3

Minimum Energy Joules

Friction:

Steel Shoe Complete Burning

Fiber Shoe Complete Burning

Other

Ignition & Unconfined Burning:

	EXPLODED		BURN TIME
Single Cube	Y	NX	1.9 Sec
Multiple Cube	Y	NX	2.4 Sec

Impact Sensitivity:

BoM cm

PA in

BoE <3.75 in

OUTPUT:

Burn Time:

Density g/cm^3 sec/cm

Density g/cm^3 sec/cm

Density g/cm^3 sec/cm

Critical Diameter: meter

Critical Height: cm

Pressure Time: psi/g

Time to Peak msec

High Explosive Equivalency:

PA Method %

Free Air Pipe Bomb %

Closed Chamber %

USE:

APPLICATION: Friction Primer Mixture

STORAGE:

	NATO	DoD
Hazards Class (Q/D)	1.1	7
Compatibility		P

NOMENCLATURE Green Flare Mixture (1)

COMPOSITION:

Ingredients	Parts by wt.
Magnesium 50/100	16.8
Magnesium 30/50	16.8
Barium Nitrate	40.1
Potassium Perchlorate	9.5
VAAR	4.2
Dechlorane	12.6

DRAWING NUMBER: (PA-FG491)*

PARAMETRIC:

Auto Ignition Temperature: 340 °C

Decomposition Temperature: 400 °C

Density:
- Bulk 0.8-0.95 g/cm^3
- Loading 1.6-1.9 g/cm^3

Fuel Oxidizer Ratio: 0.64:1

Gas Volume: ml/g

Heat of Combustion: 2317 cal/g

Heat of Reaction: 1520 cal/g

STABILITY:

Hygroscopicity:
- 95 16.42%
- 50 0.19%

Thermal Stability:
- Loss in wt. 4 %
- Change in Configuration None

Vacuum Stability: 0.11 ml/gas/40hr

Weight Loss: 0.98 %

REFERENCE/NOTES:

*Picatinny Arsenal Formula Reference Number only not official drawing no.

SENSITIVITY:

Card Gap: No Detonation

Detonation: Slight Mushrooming

Electrical Spark: > 11.02 Joules

Electrostatic:
- Minimum Concentration 0.719 oz/ft^3
- Minimum Energy 50 Joules

Friction:
- Steel Shoe No Reaction
- Fiber Shoe No Reaction
- Other

Ignition & Unconfined Burning:

	EXPLODED		BURN TIME
Single Cube	Y	NX	< 2 Sec
Multiple Cube	Y	NX	< 2 Sec

Impact Sensitivity:

BoM		cm
PA	12	in
BoE	3.75	in

OUTPUT:

Burn Time:
- Density g/cm^3 <0.4 sec/cm
- Density g/cm^3 sec/cm
- Density g/cm^3 sec/cm

Critical Diameter: 0.05 meter

Critical Height: ≃5 cm

Pressure Time: 351 psi/g
- Time to Peak 489 msec

High Explosive Equivalency:
- PA Method %
- Free Air Pipe Bomb %
- Closed Chamber %

USE:

APPLICATION: Illumination and Signal

STORAGE:

	NATO	DoD
Hazards Class (Q/D)	1.1	7
Compatibility	G	A

NOMENCLATURE Green Flare Mixture (2)

COMPOSITION:

Ingredients	Parts by wt.
Magnesium 30/50	21
Barium Nitrate	22.5
Potassium Perchlorate	32.5
Copper	7
PVC	12
Binder*	5

*CX 7069.7 - 80% & CX 3842.1 - 20%

DRAWING NUMBER:

PARAMETRIC:

Auto Ignition Temperature: °C

Decomposition Temperature: °C

Density:
- Bulk 0.8-0.95 g/cm^3
- Loading 1.79 g/cm^3

Fuel Oxidizer Ratio: 0.52 :1

Gas Volume: ml/g

Heat of Combustion: cal/g

Heat of Reaction: cal/g

STABILITY:

Hygroscopicity:
- 95 %
- 50 %

Thermal Stability:
- Loss in wt. 0 %
- Change in Configuration None

Vacuum Stability: ml/gas/40hr

Weight Loss: %

REFERENCE/NOTES:

Webster

SENSITIVITY:

Card Gap: No Detonation

Detonation:

Electrical Spark: Joules

Electrostatic:
- Minimum Concentration oz/ft^3
- Minimum Energy Joules

Friction:
- Steel Shoe No Reaction
- Fiber Shoe No Reaction
- Other

Ignition & Unconfined Burning:

	EXPLODED		BURN TIME
Single Cube	Y	N	Sec
Multiple Cube	Y	N	Sec

Impact Sensitivity:
- BoM cm
- PA in
- BoE 12 in

OUTPUT:

Burn Time:

Density	g/cm^3	sec/cm
Density	g/cm^3	sec/cm
Density	g/cm^3	sec/cm

Critical Diameter: meter

Critical Height: cm

Pressure Time: psi/g

- Time to Peak msec

High Explosive Equivalency:
- PA Method %
- Free Air Pipe Bomb %
- Closed Chamber %

USE: Navy Green Flare

APPLICATION: Signal, Night/Day

STORAGE:

	NATO	DoD
Hazards Class (Q/D)	1.3	2
Compatibility	G	A

COMPOSITION:

Ingredients	Parts by wt.
Magnesium 30/50	16
Barium Nitrate	59
Hexachlorobenzene	21
Copper Powder	2
Linseed Oil	2

DRAWING NUMBER:

PARAMETRIC:

Auto Ignition Temperature: 516 °C

Decomposition Temperature: 540 °C

Density:
- Bulk 0.8-0.95 g/cm^3
- Loading 1.6-1.9 g/cm^3

Fuel Oxidizer Ratio: 0.23:1

Gas Volume: ml/g

Heat of Combustion: cal/g

Heat of Reaction: cal/g

STABILITY:

Hygroscopicity:
- 95 16.1 %
- 50 0.15 %

Thermal Stability:
- Loss in wt. 0 %
- Change in Configuration None

Vacuum Stability: ml/gas/40hr

Weight Loss: 0.76 %

REFERENCE/NOTES:

Pollard & Arnold
Ellern
AMCP 706-188
TM 9-1910

SENSITIVITY:

Card Gap: No Detonation

Detonation: No Detonation

Electrical Spark: >11.02 Joules

Electrostatic:
- Minimum Concentration 0.719 oz/ft^3
- Minimum Energy 50 Joules

Friction:
- Steel Shoe No Reaction
- Fiber Shoe No Reaction
- Other

Ignition & Unconfined Burning:

	EXPLODED		BURN TIME
Single Cube	Y	~~N~~	2 Sec
Multiple Cube	Y	~~N~~	3 Sec

Impact Sensitivity:
- BoM cm
- PA 12 in
- BoE in

OUTPUT:

Burn Time:
- Density 0.8-0.95 g/cm^3 0.4 sec/cm
- Density g/cm^3 sec/cm
- Density g/cm^3 sec/cm

Critical Diameter: meter

Critical Height: cm

Pressure Time: psi/g

Time to Peak msec

High Explosive Equivalency:
- PA Method %
- Free Air Pipe Bomb %
- Closed Chamber %

USE:

APPLICATION: Day/Night Signal

STORAGE:

	NATO	DoD
Hazards Class (Q/D)	1.3	7
Compatibility	G	A

NOMENCLATURE Green Flare Mixture (4)

COMPOSITION:

Ingredients	Parts by wt.
Magnesium 30/50	26
Barium Nitrate	45
Potassium Perchlorate	16
Hexachlorobenzene	7
Cupric Oxide	2
Linseed Oil	2
Cilsonite	2

DRAWING NUMBER:

PARAMETRIC:

Auto Ignition Temperature: 456 °C

Decomposition Temperature: 477 °C

Density:
- Bulk 0.8-0.95 g/cm^3
- Loading 1.6-1.9 g/cm^3

Fuel Oxidizer Ratio: 0.37:1

Gas Volume: ml/g

Heat of Combustion: cal/g

Heat of Reaction: cal/g

STABILITY:

Hygroscopicity:
- 95 21.3 %
- 50 0.09 %

Thermal Stability:
- Loss in wt. 0 %
- Change in Configuration None

Vacuum Stability: ml/gas/40hr

Weight Loss: %

REFERENCE/NOTES:

Pollard & Arnold
Ellern
AMCP 706-188

SENSITIVITY:

Card Gap: No Detonation

Detonation: No Detonation

Electrical Spark: >11.02 Joules

Electrostatic:
- Minimum Concentration oz/ft^3
- Minimum Energy Joules

Friction:
- Steel Shoe No Reaction
- Fiber Shoe No Reaction
- Other

Ignition & Unconfined Burning:

	EXPLODED		BURN TIME
Single Cube	Y	N X	3 Sec
Multiple Cube	Y	N X	4 Sec

Impact Sensitivity:
- BoM cm
- PA 14 in
- BoE in

OUTPUT:

Burn Time:
- Density 0.8-0.95 g/cm^3 0.59 sec/cm
- Density g/cm^3 sec/cm
- Density g/cm^3 sec/cm

Critical Diameter: meter

Critical Height: cm

Pressure Time: psi/g
- Time to Peak msec

High Explosive Equivalency:
- PA Method %
- Free Air Pipe Bomb %
- Closed Chamber %

USE:

APPLICATION: Day/Night Signal

STORAGE:

	NATO	DoD
Hazards Class (Q/D)	1.1	
Compatibility	G	A

NOMENCLATURE Green Flare Mixture (5)

COMPOSITION:

Ingredients	Parts by wt.
Magnesium 30/50	35
Barium Nitrate	22.5
Potassium Perchlorate	22.5
Polyvinyl Chloride	13
Laminac	7

DRAWING NUMBER: (PA-FG150)*

PARAMETRIC:

Auto Ignition Temperature: 491 °C

Decomposition Temperature: 510 °C

Density:
Bulk 0.85-0.95 g/cm^3
Loading 1.7-2.4 g/cm^3

Fuel Oxidizer Ratio: 0.6 :1

Gas Volume: ml/g

Heat of Combustion: cal/g

Heat of Reaction: cal/g

STABILITY:

Hygroscopicity:
95 13.2 %
50 0.9 %

Thermal Stability:
Loss in wt. 0.8 %
Change in Configuration None

Vacuum Stability: ml/gas/40hr

Weight Loss: 0.6 %

REFERENCE/NOTES:

Ellern
Carrazza & Kaye

*Picatinny Arsenal Reference No. Only

SENSITIVITY:

Card Gap: No Detonation

Detonation: No Detonation

Electrical Spark: >11.02 Joules

Electrostatic:
Minimum Concentration oz/ft^3
Minimum Energy Joules

Friction:
Steel Shoe No Reaction
Fiber Shoe No Reaction
Other

Ignition & Unconfined Burning:

	EXPLODED		BURN TIME	
Single Cube	Y	N	2.8	Sec
Multiple Cube	Y	N	4	Sec

Impact Sensitivity:
BoM cm
PA 14 in
BoE in

OUTPUT:

Burn Time:
Density 0.85-0.95 g/cm^3 0.55 sec/cm
Density g/cm^3 sec/cm
Density g/cm^3 sec/cm

Critical Diameter: meter

Critical Height: cm

Pressure Time: psi/g
Time to Peak msec

High Explosive Equivalency:
PA Method %
Free Air Pipe Bomb %
Closed Chamber %

USE:

APPLICATION: Day/Night Signal

STORAGE:

	NATO	DoD
Hazards Class (Q/D)	1.1	7
Compatibility	G	A

NOMENCLATURE Green Flare Mixture (6)

COMPOSITION:

Ingredients	Parts by wt.
Magnesium 30/50	20
Barium Nitrate	50
Potassium Perchlorate	10
Polyvinyl Chloride	16
Asphaltum	4

DRAWING NUMBER:

PARAMETRIC:

Auto Ignition Temperature: 497 °C

Decomposition Temperature: 513 °C

Density:
- Bulk 0.8-0.95 g/cm^3
- Loading 1.7-2.4 g/cm^3

Fuel Oxidizer Ratio: 0.26:1

Gas Volume: ml/g

Heat of Combustion: cal/g

Heat of Reaction: cal/g

STABILITY:

Hygroscopicity:
- 95 14.7 %
- 50 0.09 %

Thermal Stability:
- Loss in wt. 0 %
- Change in Configuration None

Vacuum Stability: ml/gas/40hr

Weight Loss: 0.14 %

REFERENCE/NOTES:

Ellern
AMCP 706-188

SENSITIVITY:

Card Gap: No Detonation

Detonation: No Detonation

Electrical Spark: >11.02 Joules

Electrostatic:
- Minimum Concentration oz/ft^3
- Minimum Energy Joules

Friction:
- Steel Shoe No Reaction
- Fiber Shoe No Reaction
- Other

Ignition & Unconfined Burning:

	EXPLODED		BURN TIME	
Single Cube	Y	N X	7	Sec
Multiple Cube	Y	N X	9	Sec

Impact Sensitivity:
- BoM cm
- PA 13 in
- BoE in

OUTPUT:

Burn Time:
- Density 0.8-0.95 g/cm^3 1.38 sec/cm
- Density g/cm^3 sec/cm
- Density g/cm^3 sec/cm

Critical Diameter: meter

Critical Height: cm

Pressure Time: psi/g
- Time to Peak msec

High Explosive Equivalency:
- PA Method %
- Free Air Pipe Bomb %
- Closed Chamber %

USE:

APPLICATION: Day/Night Signal

STORAGE:

	NATO	DoD
Hazards Class (Q/D)	1.1	7
Compatibility	G	A

NOMENCLATURE Green Flare Mixture (7)

COMPOSITION:

Ingredients	Parts by wt.
Magnesium 30/50	23
Barium Nitrate	53
Copper	2
Hexachlorobenzene	20
Asphaltum	2

DRAWING NUMBER:

PARAMETRIC:

Auto Ignition Temperature: 456 °C

Decomposition Temperature: 469 °C

Density:
Bulk 0.7-0.9 g/cm^3
Loading 1.7-2.4 g/cm^3

Fuel Oxidizer Ratio: 0.34 :1

Gas Volume: ml/g

Heat of Combustion: cal/g

Heat of Reaction: cal/g

STABILITY:

Hygroscopicity:
95 19.1%
50 0.1%

Thermal Stability:
Loss in wt. %
Change in Configuration

Vacuum Stability: ml/gas/40hr

Weight Loss: 0.23%

REFERENCE/NOTES:

SENSITIVITY:

Card Gap: No Detonation

Detonation: No Detonation

Electrical Spark: >11.02 Joules

Electrostatic:
Minimum Concentration oz/ft^3
Minimum Energy Joules

Friction:
Steel Shoe No Reaction
Fiber Shoe No Reaction
Other

Ignition & Unconfined Burning:

	EXPLODED		BURN TIME
Single Cube	Y	N X	6 Sec
Multiple Cube	Y	N X	7 Sec

Impact Sensitivity:
BoM cm
PA 11 in
BoE in

OUTPUT:

Burn Time:
Density 0.7-0.9 g/cm^3 1.18 sec/cm
Density g/cm^3 sec/cm
Density g/cm^3 sec/cm

Critical Diameter: meter

Critical Height: cm

Pressure Time: psi/g
Time to Peak msec

High Explosive Equivalency:
PA Method %
Free Air Pipe Bomb %
Closed Chamber %

USE:

APPLICATION: Day/Night Signal

STORAGE:

	NATO	DoD
Hazards Class (Q/D)	1.1	7
Compatibility	G	A

NOMENCLATURE Green Flare Mixture (8)

COMPOSITION:

Ingredients	Parts by wt.
Magnesium 30/50	33
Barium Nitrate	46
Polyvinly Chloride	16
Binder*	5

*Laminac 4116 97.9%; Lupersol DDM 1.5%
Cobaltnapthenate 0.6%

DRAWING NUMBER: 8797956

PARAMETRIC:

Auto Ignition Temperature: °C

Decomposition Temperature: °C

Density:
Bulk 0.7-0.95 g/cm^3
Loading 1.6-2.4 g/cm^3

Fuel Oxidizer Ratio: 0.72 :1

Gas Volume: ml/g

Heat of Combustion: cal/g

Heat of Reaction: cal/g

STABILITY:

Hygroscopicity:
95 17.1 %
50 0.81 %

Thermal Stability:
Loss in wt. 0.09 %
Change in Configuration None

Vacuum Stability: ml/gas/40hr

Weight Loss: %

REFERENCE/NOTES:

SENSITIVITY:

Card Gap: No Detonation

Detonation: No Detonation

Electrical Spark: > 11.02 Joules

Electrostatic:
Minimum Concentration oz/ft^3
Minimum Energy Joules

Friction:
Steel Shoe No Reaction
Fiber Shoe No Reaction
Other

Ignition & Unconfined Burning:

	EXPLODED		BURN TIME
Single Cube	Y	N X	4 Sec
Multiple Cube	Y	N X	5 Sec

Impact Sensitivity:
BoM cm
PA 16 in
BoE in

OUTPUT:

Burn Time:
Density 0.7-0.95 g/cm^3 0.78 sec/cm
Density g/cm^3 sec/cm
Density g/cm^3 sec/cm

Critical Diameter: meter

Critical Height: cm

Pressure Time: psi/g
Time to Peak msec

High Explosive Equivalency:
PA Method %
Free Air Pipe Bomb %
Closed Chamber %

USE: Green Star Cluster M125A1

APPLICATION: Day/Night Signal

STORAGE:

	NATO	DoD
Hazards Class (Q/D)	1.1	7
Compatibility	G	A

NOMENCLATURE Green Star Mixture (9)

COMPOSITION:

Ingredients	Parts by wt.
Magnesium	15
Linseed Oil	2
Hexachlorobenzene	15
Copper Powder	2
Barium Nitrate	66

DRAWING NUMBER:

PARAMETRIC:

Auto Ignition Temperature: 448 °C

Decomposition Temperature: 479 °C

Density:
- Bulk 0.8-0.95 g/cm^3
- Loading 1.6-2.2 g/cm^3

Fuel Oxidizer Ratio: 0.21 :1

Gas Volume: ml/g

Heat of Combustion: cal/g

Heat of Reaction: cal/g

STABILITY:

Hygroscopicity:
- 95 12.6 %
- 50 0.66 %

Thermal Stability:
- Loss in wt. 0 %
- Change in Configuration None

Vacuum Stability: ml/gas/40hr

Weight Loss: 0.79 %

REFERENCE/NOTES:

Ellern

SENSITIVITY:

Card Gap: No Detonation

Detonation: No Detonation

Electrical Spark: >11.02 Joules

Electrostatic:
- Minimum Concentration oz/ft^3
- Minimum Energy Joules

Friction:
- Steel Shoe No Reaction
- Fiber Shoe No Reaction
- Other

Ignition & Unconfined Burning:

	EXPLODED		BURN TIME	
Single Cube	Y	N X	11	Sec
Multiple Cube	Y	N X	17	Sec

Impact Sensitivity:
- BoM cm
- PA 14 in
- BoE in

OUTPUT:

Burn Time:
- Density 0.8-0.95 g/cm^3 2.17 sec/cm
- Density g/cm^3 sec/cm
- Density g/cm^3 sec/cm

Critical Diameter: meter

Critical Height: cm

Pressure Time: psi/g
- Time to Peak msec

High Explosive Equivalency:
- PA Method %
- Free Air Pipe Bomb %
- Closed Chamber %

USE:

APPLICATION: Day/Night Signal

STORAGE:

	NATO	DoD
Hazards Class (Q/D)	1.1	7
Compatibility	G	A

NOMENCLATURE Red Flare Mixture (1)

COMPOSITION:

Ingredients	Parts by wt.
Magnesium 50/100	29
Potassium Perchlorate	9
Strontium Nitrate	43
Laminac	7
Polyvinyl Chloride	12

DRAWING NUMBER: PA-FR534

PARAMETRIC:

Auto Ignition Temperature: 376 °C

Decomposition Temperature: 444 °C

Density:
Bulk 0.8-0.95 g/cm^3
Loading 1.7-2.4 g/cm^3

Fuel Oxidizer Ratio: 0.56:1

Gas Volume: ml/g

Heat of Combustion: 2432 cal/g

Heat of Reaction: 1437 cal/g

STABILITY:

Hygroscopicity:
95 49.9 %
50 0.1 %

Thermal Stability:
Loss in wt. 3.5 %
Change in Configuration

Vacuum Stability: 0.25 ml/gas/40hr

Weight Loss: 1.9 %

REFERENCE/NOTES:
Ellern
AMCP 706-188

SENSITIVITY:

Card Gap: No Detonation

Detonation: Complete Burning

Electrical Spark: >11.02 Joules

Electrostatic:
Minimum Concentration oz/ft^3
Minimum Energy Joules

Friction:
Steel Shoe No Reaction
Fiber Shoe No Reaction
Other

Ignition & Unconfined Burning:

	EXPLODED		BURN TIME
Single Cube	Y	NX	<2 Sec
Multiple Cube	Y	NX	<2 Sec

Impact Sensitivity:
BoM cm
PA 17 in
BoE 3.75 in

OUTPUT:

Burn Time:
Density g/cm^3 <0.4 sec/cm
Density g/cm^3 sec/cm
Density g/cm^3 sec/cm

Critical Diameter: meter

Critical Height: cm

Pressure Time: 411 psi/g
Time to Peak 375 msec

High Explosive Equivalency:
PA Method %
Free Air Pipe Bomb %
Closed Chamber %

USE: M158

APPLICATION: Day/Night Signal

STORAGE:

	NATO	DoD
Hazards Class (Q/D)	1.1	7
Compatibility	G	A

NOMENCLATURE Red Flare Mixture (2)

COMPOSITION:

Ingredients	Parts by wt.
Magnesium 30/50	9
Magnesium 50/100	20
Potassium Perchlorate	7
Strontium Nitrate	44
Polyvinly Chloride	13
Laminac	7

DRAWING NUMBER: (PA-FR589)

PARAMETRIC:

Auto Ignition Temperature: 376 °C

Decomposition Temperature: 444 °C

Density:

Bulk 0.8-0.95 g/cm^3

Loading 1.7-2.4 g/cm^3

Fuel Oxidizer Ratio: 0.57:1

Gas Volume: ml/g

Heat of Combustion: 2475 cal/g

Heat of Reaction: 1330 cal/g

STABILITY:

Hygroscopicity:

95 45.8 %

50 0.13 %

Thermal Stability:

Loss in wt. 0 %

Change in Configuration None

Vacuum Stability: 0.42 ml/gas/40hr

Weight Loss: 1.43 %

REFERENCE/NOTES:

(See DP 162 for reference)

Weingarten

SENSITIVITY:

Card Gap: No Detonation

Detonation: 3 Samples Burned

Electrical Spark: >11.2 Joules

Electrostatic:

Minimum Concentration oz/ft^3

Minimum Energy Joules

Friction:

Steel Shoe No Reaction

Fiber Shoe No Reaction

Other

Ignition & Unconfined Burning:

	EXPLODED		BURN TIME
Single Cube	Y	N X	4 Sec
Multiple Cube	Y	N X	9 Sec

Impact Sensitivity:

BoM		cm
PA	18	in
BoE	10	in

OUTPUT:

Burn Time:

Density	g/cm^3	0.78 sec/cm
Density	g/cm^3	sec/cm
Density	g/cm^3	sec/cm

Critical Diameter: meter

Critical Height: cm

Pressure Time: 553 psi/g

Time to Peak 570 msec

High Explosive Equivalency:

PA Method %

Free Air Pipe Bomb %

Closed Chamber %

USE:

APPLICATION: Day/Night Signal

STORAGE:

	NATO	DoD
Hazards Class (Q/D)	1.1	7
Compatibility	G	A

NOMENCLATURE Red Flare Mixture (3)

COMPOSITION:

Ingredients	Parts by wt.
Magnesium 30/50	33
Strontium Nitrate	48
Polyvinyl Chloride	15
VAAR	4

DRAWING NUMBER: (PA FR602)

PARAMETRIC:

Auto Ignition Temperature: 440 °C

Decomposition Temperature: 519 °C

Density:
- Bulk 0.8-0.95 g/cm^3
- Loading 1.7-2.4 g/cm^3

Fuel Oxidizer Ratio: 0.69:1

Gas Volume: ml/g

Heat of Combustion: 2575 cal/g

Heat of Reaction: 1487 cal/g

STABILITY:

Hygroscopicity:
- 95 49.7 %
- 50 0.14 %

Thermal Stability:
- Loss in wt. 0 %
- Change in Configuration None

Vacuum Stability: 0.21 ml/gas/40hr

Weight Loss: 0.78 %

REFERENCE/NOTES:

Weingarten

SENSITIVITY:

Card Gap: No Detonation

Detonation: No Detonation, Burning

Electrical Spark: >11.02 Joules

Electrostatic:
- Minimum Concentration oz/ft^3
- Minimum Energy Joules

Friction:
- Steel Shoe No Reaction
- Fiber Shoe No Reaction
- Other

Ignition & Unconfined Burning:

	EXPLODED		BURN TIME	
Single Cube	Y	N X	9	Sec
Multiple Cube	Y	N X	15	Sec

Impact Sensitivity:

BoM		cm
PA	19	in
BoE	10	in

OUTPUT:

Burn Time:

Density	0.85-0.95	g/cm^3	1.97	sec/cm
Density		g/cm^3		sec/cm
Density		g/cm^3		sec/cm

Critical Diameter: meter

Critical Height: cm

Pressure Time: 491 psi/g

- Time to Peak 675 msec

High Explosive Equivalency:
- PA Method %
- Free Air Pipe Bomb %
- Closed Chamber %

USE:

APPLICATION: Day/Night Signal

STORAGE:

	NATO	DoD
Hazards Class (Q/D)	1.1	7
Compatibility	G	A

NOMENCLATURE Red Flare Mixture (4)

COMPOSITION:

Ingredients	Parts by wt.
Magnesium 30/50	29
Gilsonite	2
Oil (Linseed)	2
Hexachlorobenzene	4
Strontium Nitrate	34
Potassium Perchlorate	29

DRAWING NUMBER:

PARAMETRIC:

Auto Ignition Temperature: 391 °C

Decomposition Temperature: 411 °C

Density:

Bulk 0.8-0.95 g/cm^3

Loading 1.6-2.4 g/cm^3

Fuel Oxidizer Ratio: 0.46 :1

Gas Volume: ml/g

Heat of Combustion: 2378 cal/g

Heat of Reaction: 1406 cal/g

STABILITY:

Hygroscopicity:

95 40.1 %

50 0.12 %

Thermal Stability:

Loss in wt. 0.98 %

Change in Configuration None

Vacuum Stability: 0.36 ml/gas/40hr

Weight Loss: 1.21 %

REFERENCE/NOTES:

AMCP 706-188

Pollard & Arnold

Ellern

SENSITIVITY:

Card Gap: No Detonation

Detonation: 1 Sample Burned

Electrical Spark: >11.02 Joules

Electrostatic:

Minimum Concentration oz/ft^3

Minimum Energy Joules

Friction:

Steel Shoe No Reaction

Fiber Shoe No Reaction

Other

Ignition & Unconfined Burning:

	EXPLODED		BURN TIME
Single Cube	Y	N X	4.6 Sec
Multiple Cube	Y	N X	8 Sec

Impact Sensitivity:

BoM		cm
PA	16	in
BoE	10	in

OUTPUT:

Burn Time:

Density 0.8-0.95 g/cm^3 0.91 sec/cm

Density g/cm^3 sec/cm

Density g/cm^3 sec/cm

Critical Diameter: meter

Critical Height: cm

Pressure Time: psi/g

Time to Peak msec

High Explosive Equivalency:

PA Method %

Free Air Pipe Bomb %

Closed Chamber %

USE:

APPLICATION:

STORAGE:

	NATO	DoD
Hazards Class (Q/D)		
Compatibility		

NOMENCLATURE Red Flare Mixture (5)

COMPOSITION:

Ingredients	Parts by wt.
Magnesium 30/50	21
Stontium Nitrate	45
Potassium Perchlorate	15
Hexachlorobenzene	12
Gilsonite	7

DRAWING NUMBER:

PARAMETRIC:

Auto Ignition Temperature: 401 °C

Decomposition Temperature: 426 °C

Density:

Bulk 0.8-0.95 g/cm^3

Loading 1.6-2.4 g/cm^3

Fuel Oxidizer Ratio: 0.35:1

Gas Volume: ml/g

Heat of Combustion: 2518 cal/g

Heat of Reaction: 1437 cal/g

STABILITY:

Hygroscopicity:

95 39.1 %

50 0.09 %

Thermal Stability:

Loss in wt. 0.88 %

Change in Configuration None

Vacuum Stability: 0.18 ml/gas/40hr

Weight Loss: 1.01%

REFERENCE/NOTES:

AMCP 706-188
Ellern

SENSITIVITY:

Card Gap: No Detonation

Detonation: No Detonation

Electrical Spark: >11.02 Joules

Electrostatic:

Minimum Concentration oz/ft^3

Minimum Energy Joules

Friction:

Steel Shoe No Reaction

Fiber Shoe No Reaction

Other

Ignition & Unconfined Burning:

	EXPLODED		BURN TIME	
Single Cube	Y	N X	3	Sec
Multiple Cube	Y	N X	7	Sec

Impact Sensitivity:

BoM		cm
PA	15	in
BoE	15	in

OUTPUT:

Burn Time:

Density	0.8-0.95 g/cm^3	0.59 sec/cm
Density	g/cm^3	sec/cm
Density	g/cm^3	sec/cm

Critical Diameter: meter

Critical Height: cm

Pressure Time: psi/g

Time to Peak msec

High Explosive Equivalency:

PA Method %

Free Air Pipe Bomb %

Closed Chamber %

USE: MK13 Mod 0 Alternate Formula

APPLICATION: Day/Night Signal

STORAGE:

	NATO	DoD
Hazards Class (Q/D)	1.3	2
Compatibility	G	A

NOMENCLATURE Red Flare Mixture (6)

COMPOSITION:

Ingredients	Parts by wt.
Magnesium 30/50	8
Strontium Nitrate	38
Ammonium Perchlorate	15
Strontium Oxalate	10
Ployvinyl Chloride	17
Calcium Silicide	2
Stearic Acid	6

DRAWING NUMBER:

PARAMETRIC:

Auto Ignition Temperature: 414 °C

Decomposition Temperature: 439 °C

Density:
- Bulk 0.8-0.95 g/cm^3
- Loading 1.6-2.3 g/cm^3

Fuel Oxidizer Ratio: 0.22:1

Gas Volume: ml/g

Heat of Combustion: 2311 cal/g

Heat of Reaction: 1383 cal/g

STABILITY:

Hygroscopicity:
- 95 44.8 %
- 50 0.99 %

Thermal Stability:
- Loss in wt. 1.6 %
- Change in Configuration None

Vacuum Stability: 0.4 ml/gas/40hr

Weight Loss: 1.16 %

REFERENCE/NOTES:

AMCP 706-188
Ellern

SENSITIVITY:

Card Gap: No Detonation

Detonation: No Detonation

Electrical Spark: > 11.02 Joules

Electrostatic:
- Minimum Concentration oz/ft^3
- Minimum Energy Joules

Friction:
- Steel Shoe No Reaction
- Fiber Shoe No Reaction
- Other

Ignition & Unconfined Burning:

	EXPLODED		BURN TIME
Single Cube	Y	NX	9 Sec
Multiple Cube	Y	NX	13 Sec

Impact Sensitivity:
- BoM cm
- PA 18 in
- BoE in

OUTPUT:

Burn Time:
- Density 0.8-0.95 g/cm^3 1.77 sec/cm
- Density g/cm^3 sec/cm
- Density g/cm^3 sec/cm

Critical Diameter: meter

Critical Height: cm

Pressure Time: psi/g
- Time to Peak msec

High Explosive Equivalency:
- PA Method %
- Free Air Pipe Bomb %
- Closed Chamber %

USE: MK43 Mod 0 Drill Mine Signal
MK44 Mod 0 Drill Mine Signal

APPLICATION: Night Signal

STORAGE:

	NATO	DoD
Hazards Class (Q/D)	1.3	2
Compatibility	G	A

NOMENCLATURE Red Flare Mixture (7)

COMPOSITION:

Ingredients	Parts by wt.
Magnesium	17.5
Strontium Nitrate	45
Potassium Perchlorate	25
Polyvinyl Chloride	5
Gilsonite	7.5

DRAWING NUMBER:

PARAMETRIC:

Auto Ignition Temperature: 416 °C

Decomposition Temperature: 428 °C

Density:
- Bulk 0.8-0.95 g/cm^3
- Loading 1.7-2.4 g/cm^3

Fuel Oxidizer Ratio: 0.25 :1

Gas Volume: ml/g

Heat of Combustion: 2416 cal/g

Heat of Reaction: 1402 cal/g

STABILITY:

Hygroscopicity:
- 95 41.1 %
- 50 0.19 %

Thermal Stability:
- Loss in wt. 1.12 %
- Change in Configuration None

Vacuum Stability: 0.28 ml/gas/40hr

Weight Loss: 1.16 %

REFERENCE/NOTES:

AMCP 706-188
Ellern

SENSITIVITY:

Card Gap: No Detonation

Detonation: No Detonation

Electrical Spark: > 11.02 Joules

Electrostatic:
- Minimum Concentration oz/ft^3
- Minimum Energy Joules

Friction:
- Steel Shoe No Reaction
- Fiber Shoe No Reaction
- Other

Ignition & Unconfined Burning:

	EXPLODED		BURN TIME
Single Cube	Y	N X	6 Sec
Multiple Cube	Y	N X	9 Sec

Impact Sensitivity:
- BoM cm
- PA in
- BoE 15 in

OUTPUT:

Burn Time:
- Density 0.8-0.95 g/cm^3 1.18 sec/cm
- Density g/cm^3 sec/cm
- Density g/cm^3 sec/cm

Critical Diameter: meter

Critical Height: cm

Pressure Time: psi/g
- Time to Peak msec

High Explosive Equivalency:
- PA Method %
- Free Air Pipe Bomb %
- Closed Chamber %

USE:
Alternate Formula for MK13 Mod Signal

APPLICATION:
Day/Night Signal

STORAGE:

	NATO	DoD
Hazards Class (Q/D)	1.3	2
Compatibility	G	A

COMPOSITION:

Ingredients	Parts by wt.
Magnesium	40
Strontium Nitrate	30
Potassium Perchlorate	20
Hexachlorobenzene	5
Asphaltum	5

DRAWING NUMBER:

PARAMETRIC:

Auto Ignition Temperature: 510 °C

Decomposition Temperature: 560 °C

Density:
Bulk 0.8-0.95 g/cm^3
Loading 1.7-2.4 g/cm^3

Fuel Oxidizer Ratio: 0.8 :1

Gas Volume: ml/g

Heat of Combustion: 2511 cal/g

Heat of Reaction: 1415 cal/g

STABILITY:

Hygroscopicity:
95 21.3 %
50 %

Thermal Stability:
Loss in wt. 0 %
Change in Configuration None

Vacuum Stability: ml/gas/40hr

Weight Loss: %

REFERENCE/NOTES:

TM 9-1910
Arnold & Pollard

SENSITIVITY:

Card Gap: No Detonation

Detonation: No Detonation

Electrical Spark: > 11.02 Joules

Electrostatic:
Minimum Concentration oz/ft^3
Minimum Energy Joules

Friction:
Steel Shoe No Reaction
Fiber Shoe No Reaction
Other

Ignition & Unconfined Burning:

	EXPLODED		BURN TIME
Single Cube	Y	N X	9 Sec
Multiple Cube	Y	N X	11 Sec

Impact Sensitivity:
BoM cm
PA 18 in
BoE in

OUTPUT:

Burn Time:
Density 0.8-0.95 g/cm^3 1.77 sec/cm
Density g/cm^3 sec/cm
Density g/cm^3 sec/cm

Critical Diameter: meter

Critical Height: cm

Pressure Time: psi/g

Time to Peak msec

High Explosive Equivalency:
PA Method %
Free Air Pipe Bomb %
Closed Chamber %

USE:

APPLICATION: Day/Night Signal

STORAGE:

	NATO	DoD
Hazards Class (Q/D)	1.1	7
Compatibility	G	A

NOMENCLATURE Red Star Mixture (9)

COMPOSITION:

Ingredients	Parts by wt.
Magnesium 30/50	23
Potassium Perchlorate	22
Strontium Nitrate	41
Gilsonite	8
Hexachlorobenzene	6

DRAWING NUMBER:

PARAMETRIC:

Auto Ignition Temperature: 399 °C

Decomposition Temperature: 418 °C

Density:
- Bulk 0.8-0.95 g/cm^3
- Loading 1.7-2.4 g/cm^3

Fuel Oxidizer Ratio: 0.37:1

Gas Volume: ml/g

Heat of Combustion: 2216 cal/g

Heat of Reaction: 1178 cal/g

STABILITY:

Hygroscopicity:
- 95 16.6 %
- 50 %

Thermal Stability:
- Loss in wt. 0 %
- Change in Configuration None

Vacuum Stability: ml/gas/40hr

Weight Loss: %

REFERENCE/NOTES:

AMCP 706-188
Ellern

SENSITIVITY:

Card Gap: No Detonation

Detonation: No Detonation

Electrical Spark: >11.02 Joules

Electrostatic:
- Minimum Concentration oz/ft^3
- Minimum Energy Joules

Friction:
- Steel Shoe No Reaction
- Fiber Shoe No Reaction
- Other

Ignition & Unconfined Burning:

	EXPLODED		BURN TIME
Single Cube	Y	N X	14 Sec
Multiple Cube	Y	N X	17 Sec

Impact Sensitivity:
- BoM cm
- PA 17 in
- BoE in

OUTPUT:

Burn Time:
- Density 0.8-0.95 g/cm^3 2.76 sec/cm
- Density g/cm^3 sec/cm
- Density g/cm^3 sec/cm

Critical Diameter: meter

Critical Height: cm

Pressure Time: psi/g
- Time to Peak msec

High Explosive Equivalency:
- PA Method %
- Free Air Pipe Bomb %
- Closed Chamber %

USE:

APPLICATION: Night Signal

STORAGE:

	NATO	DoD
Hazards Class (Q/D)	1.1	7
Compatibility	G	A

NOMENCLATURE Yellow Flare Mixture (1)

COMPOSITION:

Ingredients	Parts by wt.
Barium Nitrate	64
Strontium Nitrate	15.5
Aluminum	3
Potassium Nitrate	15.5
Castor Oil	2

DRAWING NUMBER:

PARAMETRIC:

Auto Ignition Temperature: 510 °C

Decomposition Temperature: 579 °C

Density:
Bulk 0.8-0.95 g/cm^3
Loading 1.6-2.3 g/cm^3

Fuel Oxidizer Ratio: 0.04 :1

Gas Volume: ml/g

Heat of Combustion: 2265 cal/g

Heat of Reaction: 1310 cal/g

STABILITY:

Hygroscopicity:
95 43.7 %
50 0.24 %

Thermal Stability:
Loss in wt. 0.99 %
Change in Configuration None

Vacuum Stability: ml/gas/40hr

Weight Loss: 1.63 %

REFERENCE/NOTES:

Ellern
AMCP 706-188

SENSITIVITY:

Card Gap: No Detonation

Detonation: No Detonation

Electrical Spark: > 8.0 Joules

Electrostatic:
Minimum Concentration oz/ft^3
Minimum Energy Joules

Friction:
Steel Shoe No Reaction
Fiber Shoe No Reaction
Other

Ignition & Unconfined Burning:

	EXPLODED		BURN TIME	
Single Cube	Y	N X	7	Sec
Multiple Cube	Y	N X	13	Sec

Impact Sensitivity:
BoM cm
PA in
BoE 10 in

OUTPUT:

Burn Time:
Density 0.8-0.95 g/cm^3 1.38 sec/cm
Density g/cm^3 sec/cm
Density g/cm^3 sec/cm

Critical Diameter: meter

Critical Height: cm

Pressure Time: psi/g

Time to Peak msec

High Explosive Equivalency:
PA Method %
Free Air Pipe Bomb %
Closed Chamber %

USE:

APPLICATION: Day/Night Signal

STORAGE:

	NATO	DoD
Hazards Class (Q/D)	1.1	7
Compatibility	G	A

NOMENCLATURE Yellow Flare Mixture (2)

COMPOSITION:

Ingredients	Parts by wt.
Magnesium	26
Gilsonite	2
Oil	2
Hexachlorobenzene	5
Barium Nitrate	29
Potassium Perchlorate	23
Sodium Oxalate	13

DRAWING NUMBER:

PARAMETRIC:

Auto Ignition Temperature: 496 °C

Decomposition Temperature: 534 °C

Density:

Bulk 0.8-0.95 g/cm^3

Loading 1.6-2.3 g/cm^3

Fuel Oxidizer Ratio: 0.39:1

Gas Volume: ml/g

Heat of Combustion: 2176 cal/g

Heat of Reaction: 1254 cal/g

STABILITY:

Hygroscopicity:

95 26.1 %

50 0.09 %

Thermal Stability:

Loss in wt. 1.01 %

Change in Configuration None

Vacuum Stability: ml/gas/40hr

Weight Loss: 0.98 %

REFERENCE/NOTES:

Ellern
AMCP 706-188

SENSITIVITY:

Card Gap: No Detonation

Detonation: No Detonation

Electrical Spark: >8.0 Joules

Electrostatic:

Minimum Concentration oz/ft^3

Minimum Energy Joules

Friction:

Steel Shoe No Reaction

Fiber Shoe No Reaction

Other

Ignition & Unconfined Burning:

	EXPLODED		BURN TIME
Single Cube	Y	N X	6 Sec
Multiple Cube	Y	N X	11 Sec

Impact Sensitivity:

BoM cm

PA in

BoE 10 in

OUTPUT:

Burn Time:

Density 0.8-0.95 g/cm^3 1.18 sec/cm

Density g/cm^3 sec/cm

Density g/cm^3 sec/cm

Critical Diameter: meter

Critical Height: cm

Pressure Time: psi/g

Time to Peak msec

High Explosive Equivalency:

PA Method %

Free Air Pipe Bomb %

Closed Chamber %

USE:

APPLICATION: Day/Night Signal

STORAGE:

	NATO	DoD
Hazards Class (Q/D)	1.1	7
Compatibility	G	A

NOMENCLATURE Yellow Flare Mixture (3)

COMPOSITION:

Ingredients	Parts by wt.
Magnesium	9
Potassium Perchlorate	50
Hexachlorobenzene	9
Oil	3
Asphaltum	12
Sodium Oxalate	17

DRAWING NUMBER:

PARAMETRIC:

Auto Ignition Temperature: 478 °C

Decomposition Temperature: 510 °C

Density:
- Bulk 0.8-0.95 g/cm^3
- Loading 1.6-2.3 g/cm^3

Fuel Oxidizer Ratio: 0.13 :1

Gas Volume: ml/g

Heat of Combustion: 2218 cal/g

Heat of Reaction: 1296 cal/g

STABILITY:

Hygroscopicity:
- 95 39.1 %
- 50 0.01 %

Thermal Stability:
- Loss in wt. 0 %
- Change in Configuration None

Vacuum Stability: ml/gas/40hr

Weight Loss: 0.98 %

REFERENCE/NOTES:

Pollard & Arnold

SENSITIVITY:

Card Gap: No Detonation

Detonation: No Detonation

Electrical Spark: 8 Joules

Electrostatic:
- Minimum Concentration oz/ft^3
- Minimum Energy Joules

Friction:
- Steel Shoe No Reaction
- Fiber Shoe No Reaction
- Other

Ignition & Unconfined Burning:

	EXPLODED		BURN TIME
Single Cube	Y	N X	5 Sec
Multiple Cube	Y	N X	8 Sec

Impact Sensitivity:
- BoM cm
- PA in
- BoE 10 in

OUTPUT:

Burn Time:
- Density 0.8-0.95 g/cm^3 0.98 sec/cm
- Density g/cm^3 sec/cm
- Density g/cm^3 sec/cm

Critical Diameter: meter

Critical Height: cm

Pressure Time: psi/g
- Time to Peak msec

High Explosive Equivalency:
- PA Method %
- Free Air Pipe Bomb %
- Closed Chamber %

USE:

APPLICATION: Night Signal

STORAGE:

	NATO	DoD
Hazards Class (Q/D)	1.1	7
Compatibility	G	A

NOMENCLATURE Yellow Star Mixture (4)

COMPOSITION:

Ingredients	Parts by wt.
Magnesium	18
Strontium Nitrate	16
Barium Nitrate	17
Sodium Oxalate	17
Potassium Perchlorate	17
Hexachlorobenzene	12
Linseed Oil	3

DRAWING NUMBER:

PARAMETRIC:

Auto Ignition Temperature: 532 °C

Decomposition Temperature: 629 °C

Density:
- Bulk 0.85 g/cm^3
- Loading 1.6-2.2 g/cm^3

Fuel Oxidizer Ratio: 0.21 :1

Gas Volume: ml/g

Heat of Combustion: 1680 cal/g

Heat of Reaction: 1114 cal/g

STABILITY:

Hygroscopicity:
- 95 26.1 %
- 50 0.11 %

Thermal Stability:
- Loss in wt. 0 %
- Change in Configuration None

Vacuum Stability: ml/gas/40hr

Weight Loss: 0.87 %

REFERENCE/NOTES:

McIntyre

SENSITIVITY:

Card Gap: No Detonation

Detonation: Complete Burning

Electrical Spark: 8 Joules

Electrostatic:
- Minimum Concentration oz/ft^3
- Minimum Energy Joules

Friction:
- Steel Shoe Complete Burning
- Fiber Shoe No Reaction
- Other

Ignition & Unconfined Burning:

	EXPLODED		BURN TIME
Single Cube	Y	N X	45 Sec
Multiple Cube	Y	N X	93 Sec

Impact Sensitivity:
- BoM cm
- PA in
- BoE 3.75 in

OUTPUT:

Burn Time:
- Density 0.85 g/cm^3 8.46 sec/cm
- Density g/cm^3 sec/cm
- Density g/cm^3 sec/cm

Critical Diameter: meter

Critical Height: cm

Pressure Time: psi/g
- Time to Peak msec

High Explosive Equivalency:
- PA Method %
- Free Air Pipe Bomb %
- Closed Chamber %

USE: AN M44A2

APPLICATION: Night Signal

STORAGE:

	NATO	DoD
Hazards Class (Q/D)	1.1	7
Compatibility	G	A

COMPOSITION:

Ingredients	Parts by wt.
Magnesium	19
Gilsonite	9
Hexachlorobenzene	7
Potassium Perchlorate	50
Sodium Oxatate	15

DRAWING NUMBER:

PARAMETRIC:

Auto Ignition Temperature: 510 °C

Decomposition Temperature: 546 °C

Density:
- Bulk 0.8-0.95 g/cm^3
- Loading 1.6-2.4 g/cm^3

Fuel Oxidizer Ratio: 0.29 :1

Gas Volume: 1946 ml/g

Heat of Combustion: 1149 cal/g

Heat of Reaction: cal/g

STABILITY:

Hygroscopicity:
- 95 29.3 %
- 50 0.17 %

Thermal Stability:
- Loss in wt. 0 %
- Change in Configuration None

Vacuum Stability: ml/gas/40hr

Weight Loss: 1.1 %

REFERENCE/NOTES:

Ellern
AMCP 706-188

SENSITIVITY:

Card Gap: No Detonation

Detonation: No Detonation

Electrical Spark: > 11.02 Joules

Electrostatic:
- Minimum Concentration oz/ft^3
- Minimum Energy Joules

Friction:
- Steel Shoe No Reaction
- Fiber Shoe No Reaction
- Other

Ignition & Unconfined Burning:

	EXPLODED		BURN TIME	
Single Cube	Y	N X	21	Sec
Multiple Cube	Y	N X	37	Sec

Impact Sensitivity:
- BoM cm
- PA in
- BoE 10 in

OUTPUT:

Burn Time:
- Density 0.8-0.95 g/cm^3 4.13 sec/cm
- Density g/cm^3 sec/cm
- Density g/cm^3 sec/cm

Critical Diameter: meter

Critical Height: cm

Pressure Time: psi/g

Time to Peak msec

High Explosive Equivalency:
- PA Method %
- Free Air Pipe Bomb %
- Closed Chamber %

USE:

APPLICATION: Night Signal

STORAGE:

	NATO	DoD
Hazards Class (Q/D)	1.1	7
Compatibility	G	A

NOMENCLATURE White Flare Mixture (1)

COMPOSITION:

Ingredients	Parts by wt.
Magnesium 30/50	58
Sodium Nitrate	37.5
Laminac	4.5

DRAWING NUMBER: (PA FY1444)

PARAMETRIC:

Auto Ignition Temperature: 460 °C

Decomposition Temperature: 544 °C

Density:
- Bulk 0.96 g/cm^3
- Loading 1.74 g/cm^3

Fuel Oxidizer Ratio: 1.55 :1

Gas Volume: 74 ml/g

Heat of Combustion: 2825 cal/g

Heat of Reaction: 2035 cal/g

STABILITY:

Hygroscopicity:
- 95 67.6 %
- 50 0.02 %

Thermal Stability:
- Loss in wt. 4 %
- Change in Configuration None

Vacuum Stability: 0.18 ml/gas/40hr

Weight Loss: 2.6 %

REFERENCE/NOTES:

Ellern
Pollard & Arnold
Carrazza/Kaye
TM9-1910
McIntyre
Weingarten

SENSITIVITY:

Card Gap: No Detonation

Detonation: Slight Mushrooming

Electrical Spark: >11.02 Joules

Electrostatic:
- Minimum Concentration >1.62 oz/ft^3
- Minimum Energy >50K Joules

Friction:
- Steel Shoe No Reaction
- Fiber Shoe No Reaction
- Other

Ignition & Unconfined Burning:

	EXPLODED		BURN TIME
Single Cube	Y	N X	<2 Sec
Multiple Cube	Y	N X	<2 Sec

Impact Sensitivity:
- BoM 60 cm
- PA 19 in
- BoE 10 in

OUTPUT:

Burn Time:
- Density 0.96 g/cm^3 <0.4 sec/cm
- Density 2.2 g/cm^3 6.56 sec/cm
- Density 2.23 g/cm^3 9.2 sec/cm

Critical Diameter: ≃0.3 meter

Critical Height: ≃.25 cm

Pressure Time: 464 psi/g
- Time to Peak 438 msec

High Explosive Equivalency:
- PA Method 49.5 %
- Free Air Pipe Bomb %
- Closed Chamber %

USE:
MK24
MK45

APPLICATION:
Aircraft Parachute Flare
Night landing and observation bombing

STORAGE:

	NATO	DoD
Hazards Class (Q/D)	1.1	7
Compatibility	G	A

NOMENCLATURE White Star Mixture (2)

COMPOSITION:

Ingredients	Parts by wt.
Magnesium 30/50	50
Sodium Nitrate	44
Laminac	6

DRAWING NUMBER: (PA FY926)

PARAMETRIC:

Auto Ignition Temperature: 414 °C

Decomposition Temperature: 490 °C

Density:
- Bulk 0.91 g/cm^3
- Loading 1.7-2.2 g/cm^3

Fuel Oxidizer Ratio: 1.14:1

Gas Volume: 53 ml/g

Heat of Combustion: 3090 cal/g

Heat of Reaction: 1995 cal/g

STABILITY:

Hygroscopicity:
- 95 43.7 %
- 50 0.15 %

Thermal Stability:
- Loss in wt. 0 %
- Change in Configuration None

Vacuum Stability: 0.14 ml/gas/40hr

Weight Loss: 2.2 %

REFERENCE/NOTES:

TM9-1370-203-12
Kristal & Kaye
McIntyre

SENSITIVITY:

Card Gap: No Detonation

Detonation: Complete Burning

Electrical Spark: 11.02 Joules

Electrostatic:
- Minimum Concentration >1.62 oz/ft^3
- Minimum Energy >50K Joules

Friction:
- Steel Shoe Complete Burning
- Fiber Shoe No Reaction
- Other

Ignition & Unconfined Burning:

	EXPLODED		BURN TIME	
Single Cube	Y	NX	2	Sec
Multiple Cube	Y	NX	2	Sec

Impact Sensitivity:

BoM		cm
PA	18	in
BoE	10	in

OUTPUT:

Burn Time:

Density	0.91	g/cm^3	0.4	sec/cm
Density		g/cm^3		sec/cm
Density	2.1	g/cm^3	4.63	sec/cm

Critical Diameter: meter

Critical Height: cm

Pressure Time: psi/g

- Time to Peak msec

High Explosive Equivalency:
- PA Method %
- Free Air Pipe Bomb %
- Closed Chamber %

USE: Signal, Illumination Ground White Star M127A1

APPLICATION: Night Illumination

STORAGE:

	NATO	DoD
Hazards Class (Q/D)	1.1	7
Compatibility	G	A

NOMENCLATURE White Flare Mixture (3)

COMPOSITION:

Ingredients	Parts by wt.
Magnesium 30/50	46
Strontium Nitrate	45
Laminac	9

DRAWING NUMBER: (PA FY1451)

PARAMETRIC:

Auto Ignition Temperature: 431 °C

Decomposition Temperature: 510 °C

Density:
- Bulk 0.78 g/cm^3
- Loading 2.34 g/cm^3

Fuel Oxidizer Ratio: 1.02:1

Gas Volume: 50 ml/g

Heat of Combustion: 2835 cal/g

Heat of Reaction: 1748 cal/g

STABILITY:

Hygroscopicity:
- 95 58.7 %
- 50 0.12 %

Thermal Stability:
- Loss in wt. 0 %
- Change in Configuration None

Vacuum Stability: .50 ml/gas/40hr

Weight Loss: 1.19%

REFERENCE/NOTES:

PA TM2212
PA TR4981
Ellern
EA-FR-2EOX

SENSITIVITY:

Card Gap: No Detonation

Detonation: No Detonation

Electrical Spark: >11.02 Joules

Electrostatic:
- Minimum Concentration >1.62 oz/ft^3
- Minimum Energy >50K Joules

Friction:
- Steel Shoe No Reaction
- Fiber Shoe No Reaction
- Other

Ignition & Unconfined Burning:

	EXPLODED		BURN TIME	
Single Cube	Y	N X	13	Sec
Multiple Cube	Y	N X	14	Sec

Impact Sensitivity:

BoM		cm
PA	20	in
BoE	3.75	in

OUTPUT:

Burn Time:

Density	0.78	g/cm^3	2.56	sec/cm
Density		g/cm^3		sec/cm
Density		g/cm^3		sec/cm

Critical Diameter: Confined ≃0.54 meter

Critical Height: cm

Pressure Time:
- 354 psi/g
- Time to Peak 3775 msec

High Explosive Equivalency:
- PA Method %
- Free Air Pipe Bomb %
- Closed Chamber %

USE:

APPLICATION: Night Illumination

STORAGE:

	NATO	DoD
Hazards Class (Q/D)	1.1	7
Compatibility	G	A

COMPOSITION:

Ingredients	Parts by wt.
Magnesium 30/50	48
Sodium Nitrate	42
Laminac	8
Polyvinyl Chloride	2

DRAWING NUMBER: (PA-FY790)

PARAMETRIC:

Auto Ignition Temperature: 437 °C

Decomposition Temperature: 517 °C

Density:
- Bulk 0.92 g/cm^3
- Loading 1.78 g/cm^3

Fuel Oxidizer Ratio: 1.14 :1

Gas Volume: 46 ml/g

Heat of Combustion: 2692 cal/g

Heat of Reaction: 1643 cal/g

STABILITY:

Hygroscopicity:
- 95 42 %
- 50 0.23 %

Thermal Stability:
- Loss in wt. 0 %
- Change in Configuration None

Vacuum Stability: 0.11 ml/gas/40hr

Weight Loss: 1.8 %

REFERENCE/NOTES:

Pollard & Arnold
TM9-1910
AMCP 706-185
Kristal & Kaye (TM1316)

SENSITIVITY:

Card Gap: No Detonation

Detonation: No Detonation

Electrical Spark: >11.02 Joules

Electrostatic:
- Minimum Concentration >1.62 oz/ft^3
- Minimum Energy >50K Joules

Friction:
- Steel Shoe No Reaction
- Fiber Shoe No Reaction
- Other

Ignition & Unconfined Burning:

	EXPLODED		BURN TIME
Single Cube	Y	N X	4 Sec
Multiple Cube	Y	N X	7 Sec

Impact Sensitivity:

BoM		cm
PA	17	in
BoE	10	in

OUTPUT:

Burn Time:

Density	0.92	g/cm^3	0.85	sec/cm
Density		g/cm^3		sec/cm
Density	1.78	g/cm^3	1.18	sec/cm

Critical Diameter: meter

Critical Height: cm

Pressure Time: psi/g

Time to Peak msec

High Explosive Equivalency:
- PA Method %
- Free Air Pipe Bomb %
- Closed Chamber %

USE: Flare Parachute Aircraft

APPLICATION: Aircraft Parachute Flare
Night landing, observation and night bombing

STORAGE:

	NATO	DoD
Hazards Class (Q/D)	1.1	7
Compatibility	G	A

NOMENCLATURE White Flare Mixture (5)

COMPOSITION:

Ingredients	Parts by wt.
Magnesium 30/50	44
Sodium Nitrate	44
Laminac	12

DRAWING NUMBER: (PA-FY375)

PARAMETRIC:

Auto Ignition Temperature: 425 °C

Decomposition Temperature: 502 °C

Density:
- Bulk 0.91 g/cm^3
- Loading 2.34 g/cm^3

Fuel Oxidizer Ratio: 1 :1

Gas Volume: 66 ml/g

Heat of Combustion: 2595 cal/g

Heat of Reaction: 1611 cal/g

STABILITY:

Hygroscopicity:
- 95 26 %
- 50 0.9 %

Thermal Stability:
- Loss in wt. 0 %
- Change in Configuration None

Vacuum Stability: 0.16 ml/gas/40hr

Weight Loss: 1.6 %

REFERENCE/NOTES:

TM9-1910

SENSITIVITY:

Card Gap: No Detonation

Detonation: No Detonation

Electrical Spark: >11.02 Joules

Electrostatic:
- Minimum Concentration >1.62 oz/ft^3
- Minimum Energy >50K Joules

Friction:
- Steel Shoe No Reaction
- Fiber Shoe No Reaction
- Other

Ignition & Unconfined Burning:

	EXPLODED		BURN TIME	
Single Cube	Y	N X	3	Sec
Multiple Cube	Y	N X	5	Sec

Impact Sensitivity:

BoM		cm
PA	13	in
BoE	10	in

OUTPUT:

Burn Time:
- Density 0.91 g/cm^3 0.59 sec/cm
- Density g/cm^3 sec/cm
- Density g/cm^3 sec/cm

Critical Diameter: meter

Critical Height: cm

Pressure Time: psi/g

Time to Peak msec

High Explosive Equivalency:
- PA Method %
- Free Air Pipe Bomb %
- Closed Chamber %

USE: 155MM Projectile Illumination

APPLICATION: Night Illumination

STORAGE:

	NATO	DoD
Hazards Class (Q/D)	1.1	7
Compatibility	G	A

NOMENCLATURE White Flare Mixture (6)

COMPOSITION:

Ingredients	Parts by wt.
Magnesium 30/50	48
Sodium Nitrate	40
Laminac	12

DRAWING NUMBER:

PARAMETRIC:

Auto Ignition Temperature: 441 °C

Decomposition Temperature: 522 °C

Density:
- Bulk 0.9 g/cm^3
- Loading 1.7-2.2 g/cm^3

Fuel Oxidizer Ratio: 1.2:1

Gas Volume: 54 ml/g

Heat of Combustion: 2925 cal/g

Heat of Reaction: 1817 cal/g

STABILITY:

Hygroscopicity:
- 95 42 %
- 50 0.95 %

Thermal Stability:
- Loss in wt. 0 %
- Change in Configuration None

Vacuum Stability: 0.18 ml/gas/40hr

Weight Loss: 1.77 %

REFERENCE/NOTES:

TM9-1910

SENSITIVITY:

Card Gap: No Detonation

Detonation: 2 Samples Burned

Electrical Spark: >11.02 Joules

Electrostatic:
- Minimum Concentration > 1.62 oz/ft^3
- Minimum Energy > 50K Joules

Friction:
- Steel Shoe Burning
- Fiber Shoe No Reaction
- Other

Ignition & Unconfined Burning:

	EXPLODED		BURN TIME
Single Cube	Y	NX	5 Sec
Multiple Cube	Y	NX	8 Sec

Impact Sensitivity:

BoM		cm
PA	24	in
BoE	10	in

OUTPUT:

Burn Time:

Density	0.9	g/cm^3	0.98 sec/cm
Density		g/cm^3	sec/cm
Density		g/cm^3	sec/cm

Critical Diameter: meter

Critical Height: cm

Pressure Time: psi/g

- Time to Peak msec

High Explosive Equivalency:
- PA Method %
- Free Air Pipe Bomb %
- Closed Chamber %

USE: 105MM Projectile Illumination

APPLICATION: Night Illumination

STORAGE:

	NATO	DoD
Hazards Class (Q/D)	1.1	7
Compatibility	G	A

NOMENCLATURE White Flare Mixture (7)

COMPOSITION:

Ingredients	Parts by wt.
Magnesium 100/200	70
Sodium Nitrate	30

DRAWING NUMBER: (PA-FY739)

PARAMETRIC:

Auto Ignition Temperature: 525 °C

Decomposition Temperature: 620 °C

Density:
Bulk 1.65 g/cm^3
Loading g/cm^3

Fuel Oxidizer Ratio: 2.33:1

Gas Volume: 67 ml/g

Heat of Combustion: 3016 cal/g

Heat of Reaction: 1945 cal/g

STABILITY:

Hygroscopicity:
95 11 %
50 0.11 %

Thermal Stability:
Loss in wt. 0 %
Change in Configuration None

Vacuum Stability: 0.32 ml/gas/40hr

Weight Loss: 0.78%

REFERENCE/NOTES:

Carrazza & Kaye

SENSITIVITY:

Card Gap: No Detonation

Detonation: Samples Burned

Electrical Spark: >11.02 Joules

Electrostatic:
Minimum Concentration >1.62 oz/ft^3
Minimum Energy >50K Joules

Friction:
Steel Shoe No Reaction
Fiber Shoe No Reaction
Other

Ignition & Unconfined Burning:

	EXPLODED		BURN TIME	
Single Cube	Y	NX	8	Sec
Multiple Cube	Y	NX	13	Sec

Impact Sensitivity:
BoM 100 cm
PA 22 in
BoE in

OUTPUT:

Burn Time:
Density 1.65 g/cm^3 1.54 sec/cm
Density g/cm^3 sec/cm
Density g/cm^3 sec/cm

Critical Diameter: meter

Critical Height: cm

Pressure Time: psi/g

Time to Peak msec

High Explosive Equivalency:
PA Method %
Free Air Pipe Bomb %
Closed Chamber %

USE:

APPLICATION: Night Illumination

STORAGE:

	NATO	DoD
Hazards Class (Q/D)	1.1	7
Compatibility	G	A

COMPOSITION:

Ingredients	Parts by wt.
Magnesium	48.4
Sodium Nitrate	47.2
VAAR	4.4

DRAWING NUMBER: 8836967

PARAMETRIC:

Auto Ignition Temperature: 440 °C

Decomposition Temperature: 519 °C

Density:
- Bulk 0.91 g/cm^3
- Loading 2.34 g/cm^3

Fuel Oxidizer Ratio: 1.02:1

Gas Volume: 53 ml/g

Heat of Combustion: 2818 cal/g

Heat of Reaction: 1813 cal/g

STABILITY:

Hygroscopicity:
- 95 59.9 %
- 50 0.42 %

Thermal Stability:
- Loss in wt. 0 %
- Change in Configuration None

Vacuum Stability: 0.34 ml/gas/40hr

Weight Loss: 0.96 %

REFERENCE/NOTES:

Taylor

SENSITIVITY:

Card Gap: No Detonation

Detonation: Sample Burned

Electrical Spark: >11.02 Joules

Electrostatic:
- Minimum Concentration >1.62 oz/ft^3
- Minimum Energy >50K Joules

Friction:
- Steel Shoe No Reaction
- Fiber Shoe No Reaction
- Other

Ignition & Unconfined Burning:

	EXPLODED		BURN TIME
Single Cube	Y	N X	10 Sec
Multiple Cube	Y	N X	12 Sec

Impact Sensitivity:
- BoM cm
- PA 21 in
- BoE 10 in

OUTPUT:

Burn Time:
- Density 0.91 g/cm^3 1.96 sec/cm
- Density g/cm^3 sec/cm
- Density g/cm^3 sec/cm

Critical Diameter: meter

Critical Height: cm

Pressure Time: 31 psi/g

Time to Peak 2045 msec

High Explosive Equivalency:
- PA Method %
- Free Air Pipe Bomb %
- Closed Chamber %

USE: M49A1 Trip Flare

APPLICATION: Night Illumination

STORAGE:

	NATO	DoD
Hazards Class (Q/D)	1.1	7
Compatibility	G	A

COMPOSITION:

Ingredients	Parts by wt.
Magnesium	36
Sodium Nitrate	54
VAAR*	10

*Laminac 4116 may also be used

DRAWING NUMBER: (PA-9251745)

PARAMETRIC:

Auto Ignition Temperature: 415 °C

Decomposition Temperature: 490 °C

Density:
Bulk 0.86 g/cm^3
Loading 1.92 g/cm^3

Fuel Oxidizer Ratio: 0.66:1

Gas Volume: 70 ml/g

Heat of Combustion: 2660 cal/g

Heat of Reaction: 1524 cal/g

STABILITY:

Hygroscopicity:
95 26.2 %
50 0.18 %

Thermal Stability:
Loss in wt. 0 %
Change in Configuration None

Vacuum Stability: ml/gas/40hr

Weight Loss: 1.11 %

REFERENCE/NOTES:

Taylor
Napadensky H.S., Swatosh SS Jr.
Humphreys A.

SENSITIVITY:

Card Gap: No Detonation

Detonation: Samples Burned

Electrical Spark: >11.02 Joules

Electrostatic:
Minimum Concentration >1.62 oz/ft^3
Minimum Energy >50K Joules

Friction:
Steel Shoe No Reaction
Fiber Shoe No Reaction
Other

Ignition & Unconfined Burning:

	EXPLODED		BURN TIME
Single Cube	Y	N X	9 Sec
Multiple Cube	Y	N X	10 Sec

Impact Sensitivity:

BoM		cm
PA	18	in
BoE	10	in

OUTPUT:

Burn Time:
Density 0.86 g/cm^3 1.8 sec/cm
Density g/cm^3 sec/cm
Density g/cm^3 sec/cm

Critical Diameter: meter

Critical Height: cm

Pressure Time: psi/g

Time to Peak msec

High Explosive Equivalency:
PA Method 50 %
Free Air Pipe Bomb %
Closed Chamber %

USE: M49A1 Trip Flare

APPLICATION: Night Illumination

STORAGE:

	NATO	DoD
Hazards Class (Q/D)	1.1	7
Compatibility	G	A

COMPOSITION:

Ingredients	Parts by wt.
Magnesium 30/50	55
Sodium Nitrate	36
Laminac	9

DRAWING NUMBER: 9251740

PARAMETRIC:

Auto Ignition Temperature: 448 °C

Decomposition Temperature: 530 °C

Density:
- Bulk 0.86 g/cm^3
- Loading 1.57 g/cm^3

Fuel Oxidizer Ratio: 1.49 :1

Gas Volume: 68 ml/g

Heat of Combustion: 2795 cal/g

Heat of Reaction: 1918 cal/g

STABILITY:

Hygroscopicity:
- 95 41 %
- 50 1.1 %

Thermal Stability:
- Loss in wt. 0.99 %
- Change in Configuration None

Vacuum Stability: 0.15 ml/gas/40hr

Weight Loss: 0.99 %

REFERENCE/NOTES:

TM9-1910
Ellern
TR 4628
Carrazza & Kaye

SENSITIVITY:

Card Gap: No Detonation

Detonation: Sample Burned

Electrical Spark: >11.02 Joules

Electrostatic:
- Minimum Concentration >1.62 oz/ft^3
- Minimum Energy 50K Joules

Friction:
- Steel Shoe No Reaction
- Fiber Shoe No Reaction
- Other

Ignition & Unconfined Burning:

	EXPLODED		BURN TIME	
Single Cube	Y	N X	20	Sec
Multiple Cube	Y	N X	20	Sec

Impact Sensitivity:
- BoM cm
- PA 20 in
- BoE 10 in

OUTPUT:

Burn Time:
- Density 0.86 g/cm^3 3.94 sec/cm
- Density 1.57 g/cm^3 5.9 sec/cm
- Density g/cm^3 sec/cm

Critical Diameter: meter

Critical Height: cm

Pressure Time: psi/g

Time to Peak msec

High Explosive Equivalency:
- PA Method 30 %
- Free Air Pipe Bomb %
- Closed Chamber %

USE: M301A2 81MM Projectile
M314A3 105MM Projectile

APPLICATION: Night Target Illumination

STORAGE:

	NATO	DoD
Hazards Class (Q/D)	1.1	7
Compatibility	G	A

NOMENCLATURE White Flare Mixture (11)

COMPOSITION:

Ingredients	Parts by wt.
Magnesium 200/300	54
Nitrocellulose	2.6
TFE 100 Mesh	46

DRAWING NUMBER: (PA FW231)

PARAMETRIC:

Auto Ignition Temperature: 510 °C

Decomposition Temperature: 602 °C

Density:
- Bulk 0.7 g/cm^3
- Loading 1.7-2.2 g/cm^3

Fuel Oxidizer Ratio: 1.17 :1

Gas Volume: 73 ml/g

Heat of Combustion: 2245 cal/g

Heat of Reaction: 1115 cal/g

STABILITY:

Hygroscopicity:
- 95 0.22 %
- 50 0.22 %

Thermal Stability:
- Loss in wt. 0 %
- Change in Configuration None

Vacuum Stability: 0.51 ml/gas/40hr

Weight Loss: 0.19 %

REFERENCE/NOTES:

Weingarten

SENSITIVITY:

Card Gap: No Detonation

Detonation: Complete Burning

Electrical Spark: 0.375 Joules

Electrostatic:
- Minimum Concentration 0.719 oz/ft^3
- Minimum Energy 50 Joules

Friction:
- Steel Shoe No Reaction
- Fiber Shoe No Reaction
- Other

Ignition & Unconfined Burning:

	EXPLODED		BURN TIME	
Single Cube	Y	·N X	2	Sec
Multiple Cube	Y	N X	2	Sec

Impact Sensitivity:
- BoM cm
- PA 21 in
- BoE 3.75 in

OUTPUT:

Burn Time:
- Density 0.7 g/cm^3 0.4 sec/cm
- Density g/cm^3 sec/cm
- Density g/cm^3 sec/cm

Critical Diameter: meter

Critical Height: cm

Pressure Time: psi/g

Time to Peak msec

High Explosive Equivalency:
- PA Method 10 %
- Free Air Pipe Bomb %
- Closed Chamber %

USE:

APPLICATION: Night Signal

STORAGE:

	NATO	DoD
Hazards Class (Q/D)	1.1	7
Compatibility	G	A

COMPOSITION:

Ingredients	Parts by wt.
Magnesium 200/325	54
TFE 60 Mesh	46
Nitrocellulose	2.6

DRAWING NUMBER: (PA-FW306)

PARAMETRIC:

Auto Ignition Temperature: 510 °C

Decomposition Temperature: 602 °C

Density:
- Bulk 0.69 g/cm^3
- Loading 1.7-2.2 g/cm^3

Fuel Oxidizer Ratio: 1.17:1

Gas Volume: 79 ml/g

Heat of Combustion: 2229 cal/g

Heat of Reaction: 1090 cal/g

STABILITY:

Hygroscopicity:
- 95 0.33 %
- 50 0.33 %

Thermal Stability:
- Loss in wt. 0 %
- Change in Configuration None

Vacuum Stability: 0.56 ml/gas/40hr

Weight Loss: 0.23 %

REFERENCE/NOTES:

PA-TR4981
PA-TM2212
EA-FR-2EOX

SENSITIVITY:

Card Gap: No Detonation

Detonation: Complete Burning

Electrical Spark: 1.325 Joules

Electrostatic:
- Minimum Concentration 0.97 oz/ft^3
- Minimum Energy >50K Joules

Friction:
- Steel Shoe No Reaction
- Fiber Shoe No Reaction
- Other

Ignition & Unconfined Burning:

	EXPLODED		BURN TIME	
Single Cube	Y	N	2	Sec
Multiple Cube	Y	N	2	Sec

Impact Sensitivity:

BoM		cm
PA	21	in
BoE	10	in

OUTPUT:

Burn Time:
- Density 0.69 g/cm^3 0.4 sec/cm
- Density g/cm^3 sec/cm
- Density g/cm^3 sec/cm

Critical Diameter: Confined 0.054 meter

Critical Height: cm

Pressure Time: psi/g

Time to Peak msec

High Explosive Equivalency:
- PA Method 10 %
- Free Air Pipe Bomb %
- Closed Chamber %

USE:

APPLICATION: Night Signal Illumination

STORAGE:

	NATO	DoD
Hazards Class (Q/D)	1.1	7
Compatibility	G	A

NOMENCLATURE White Flare Mixture (13)

COMPOSITION:

Ingredients	Parts by wt.
Magnesium	29.5
Barium Nitrate	49
Strontium Nitrate	16.5
VAAR	5

DRAWING NUMBER: (PA-FW345)

PARAMETRIC:

Auto Ignition Temperature: 425 °C

Decomposition Temperature: 500 °C

Density:
- Bulk 0.89 g/cm^3
- Loading 1.7-2.2 g/cm^3

Fuel Oxidizer Ratio: 0.45:1

Gas Volume: 65 ml/g

Heat of Combustion: 2456 cal/g

Heat of Reaction: 1490 cal/g

STABILITY:

Hygroscopicity:
- 95 16.7 %
- 50 16.7 %

Thermal Stability:
- Loss in wt. 0 %
- Change in Configuration None

Vacuum Stability: 0.19 ml/gas/40hr

Weight Loss: 5.73 %

REFERENCE/NOTES:

Weingarten

SENSITIVITY:

Card Gap: No Detonation

Detonation: Samples Burned

Electrical Spark: >11.02 Joules

Electrostatic:
- Minimum Concentration >0.719 oz/ft^3
- Minimum Energy >50K Joules

Friction:
- Steel Shoe No Reaction
- Fiber Shoe No Reaction
- Other

Ignition & Unconfined Burning:

	EXPLODED		BURN TIME	
Single Cube	Y	N	8	Sec
Multiple Cube	Y	N	8	Sec

Impact Sensitivity:

BoM		cm
PA	24	in
BoE	10	in

OUTPUT:

Burn Time:
- Density 0.89 g/cm^3 1.94 sec/cm
- Density g/cm^3 sec/cm
- Density g/cm^3 sec/cm

Critical Diameter: meter

Critical Height: cm

Pressure Time: 249 psi/g

Time to Peak 4300 msec

High Explosive Equivalency:
- PA Method %
- Free Air Pipe Bomb %
- Closed Chamber %

USE:

APPLICATION: Night Illumination

STORAGE:

	NATO	DoD
Hazards Class (Q/D)	1.1	7
Compatibility	G	A

NOMENCLATURE White Flare Mixture (16)

COMPOSITION:

Ingredients	Parts by wt.
Magnesium 30/50	61
Sodium Nitrate, Fine	20
Sodium Nitrate, Coarse	10.8
Binder	8.

DRAWING NUMBER:

PARAMETRIC:

Auto Ignition Temperature: 515 °C

Decomposition Temperature: 586 °C

Density:
- Bulk 0.94 g/cm^3
- Loading 2.32 g/cm^3

Fuel Oxidizer Ratio: 1.97:1

Gas Volume: 60 ml/g

Heat of Combustion: 2942 cal/g

Heat of Reaction: 1814 cal/g

STABILITY:

Hygroscopicity:
- 95 25.6 %
- 50 0.11 %

Thermal Stability:
- Loss in wt. 0 %
- Change in Configuration None

Vacuum Stability: 0.18 ml/gas/40hr

Weight Loss: 0.96 %

REFERENCE/NOTES:

Webster

SENSITIVITY:

Card Gap: No Detonation

Detonation: Samples Burned

Electrical Spark: >11.02 Joules

Electrostatic:
- Minimum Concentration >1.62 oz/ft^3
- Minimum Energy >50K Joules

Friction:
- Steel Shoe No Reaction
- Fiber Shoe No Reaction
- Other

Ignition & Unconfined Burning:

	EXPLODED		BURN TIME	
Single Cube	Y	NX	14	Sec
Multiple Cube	Y	NX	16	Sec

Impact Sensitivity:
- BoM cm
- PA in
- BoE 10 in

OUTPUT:

Burn Time:
- Density 0.94 g/cm^3 2.75 sec/cm
- Density g/cm^3 sec/cm
- Density g/cm^3 sec/cm

Critical Diameter: meter

Critical Height: cm

Pressure Time: psi/g

Time to Peak msec

High Explosive Equivalency:
- PA Method %
- Free Air Pipe Bomb %
- Closed Chamber %

USE: LUU-2B/B

APPLICATION: Aircraft Parachute Flare

STORAGE:

	NATO	DoD
Hazards Class (Q/D)	1.1	7
Compatibility	G	A

NOMENCLATURE Photoflash Powder (1)

COMPOSITION:

Ingredients	Parts by wt.
Aluminum 20	40
Barium Nitrate 147	30
Potassium Perchlorate 24	30

DRAWING NUMBER: (PA-PFP555)

PARAMETRIC:

Auto Ignition Temperature: 856 °C

Decomposition Temperature: 912 °C

Density:
- Bulk 1.34 g/cm^3
- Loading 1.8 g/cm^3

Fuel Oxidizer Ratio: 0.67:1

Gas Volume: 15 ml/g

Heat of Combustion: 2628 cal/g

Heat of Reaction: 1790 cal/g

STABILITY:

Hygroscopicity:
- 95 0.11 %
- 50 < 0.1 %

Thermal Stability:
- Loss in wt. 0 %
- Change in Configuration None

Vacuum Stability: 0.22 ml/gas/40hr

Weight Loss: 0.09 %

REFERENCE/NOTES:

Ellern
Weingarten
AMCP 706-185
GE-HERE-R056
EA-FR-2EOX

SENSITIVITY:

Card Gap: No Detonation

Detonation: Mushrooming, 3 Samples Burned

Electrical Spark: 2.14 Joules

Electrostatic:
- Minimum Concentration 1.52 oz/ft^3
- Minimum Energy 50K Joules

Friction:
- Steel Shoe Snaps
- Fiber Shoe No Reaction
- Other

Ignition & Unconfined Burning:

	EXPLODED		BURN TIME
Single Cube	Y	NX	< 2 Sec
Multiple Cube	Y	NX	< 2 Sec

Impact Sensitivity:
- BoM 100 cm
- PA 40 in
- BoE 10 in

OUTPUT:

Burn Time:
- Density 1.34 g/cm^3 <0.4 sec/cm
- Density g/cm^3 sec/cm
- Density g/cm^3 sec/cm

Critical Diameter: Confined 0.054 meter

Critical Height: 110 cm

Pressure Time: 320 psi/g

Time to Peak 557 msec

High Explosive Equivalency:
- PA Method %
- Free Air Pipe Bomb 36 %
- Closed Chamber %

USE: M112A1, M112A3, T9E8, M120, T93, T94

APPLICATION: Flash Powder for Aerial Photography

STORAGE:

	NATO	DoD
Hazards Class (Q/D)	1.1	7
Compatibility	G	A

NOMENCLATURE White Flare Mixture (14)

COMPOSITION:

Ingredients	Parts by wt.
Aluminum	35
Sodium Nitrate	53
Tungsten	7
Laminac	5

DRAWING NUMBER: (PA-FY1629)

PARAMETRIC:

Auto Ignition Temperature: 564 °C

Decomposition Temperature: 666 °C

Density:
- Bulk: 0.85 g/cm^3
- Loading: 1.7-2.2 g/cm^3

Fuel Oxidizer Ratio: 0.79:1

Gas Volume: ml/g

Heat of Combustion: cal/g

Heat of Reaction: cal/g

STABILITY:

Hygroscopicity:
- 95 47 %
- 50 0.06 %

Thermal Stability:
- Loss in wt. 0 %
- Change in Configuration None

Vacuum Stability: 0.35 ml/gas/40hr

Weight Loss: 1.1 %

REFERENCE/NOTES:

Taylor & Jackson

SENSITIVITY:

Card Gap: No Detonation

Detonation: Complete Burning

Electrical Spark: >11.02 Joules

Electrostatic:
- Minimum Concentration >1.62 oz/ft^3
- Minimum Energy >50K Joules

Friction:
- Steel Shoe No Reaction
- Fiber Shoe No Reaction
- Other

Ignition & Unconfined Burning:

	EXPLODED		BURN TIME	
Single Cube	Y	N	4	Sec
Multiple Cube	Y	N	6	Sec

Impact Sensitivity:

BoM		cm
PA	21	in
BoE	10	in

OUTPUT:

Burn Time:

Density	0.85	g/cm^3	0.8	sec/cm
Density		g/cm^3		sec/cm
Density		g/cm^3		sec/cm

Critical Diameter: meter

Critical Height: cm

Pressure Time: psi/g

Time to Peak msec

High Explosive Equivalency:
- PA Method %
- Free Air Pipe Bomb %
- Closed Chamber %

USE: Experimental M49A1 Trip Flare Formulation

APPLICATION: Night Illumination

STORAGE:

	NATO	DoD
Hazards Class (Q/D)	1.1	7
Compatibility	G	A

COMPOSITION:

Ingredients	Parts by wt.
Magnesium	25
Aluminum	14
Barium Nitrate	42
Strontium Nitrate	11
Asphaltum	5
Linseed Oil	3

DRAWING NUMBER:

PARAMETRIC:

Auto Ignition Temperature: 525 °C

Decomposition Temperature: 621 °C

Density:
- Bulk 0.93 g/cm^3
- Loading 1.7-1.9 g/cm^3

Fuel Oxidizer Ratio: 0.74:1

Gas Volume: 43 ml/g

Heat of Combustion: 2610 cal/g

Heat of Reaction: 1407 cal/g

STABILITY:

Hygroscopicity:
- 95 53 %
- 50 0.18 %

Thermal Stability:
- Loss in wt. 0 %
- Change in Configuration None

Vacuum Stability: 0.46 ml/gas/40hr

Weight Loss: 1.14 %

REFERENCE/NOTES:

Ellern

SENSITIVITY:

Card Gap: No Detonation

Detonation: Samples Burned

Electrical Spark: >11.02 Joules

Electrostatic:
- Minimum Concentration >1.62 oz/ft^3
- Minimum Energy >50K Joules

Friction:
- Steel Shoe Complete Burning
- Fiber Shoe No Reaction
- Other

Ignition & Unconfined Burning:

	EXPLODED		BURN TIME	
Single Cube	Y	N X	10	Sec
Multiple Cube	Y	N X	14	Sec

Impact Sensitivity:

BoM		cm
PA		in
BoE	10	in

OUTPUT:

Burn Time:

Density	0.93	g/cm^3	1.97	sec/cm
Density		g/cm^3		sec/cm
Density		g/cm^3		sec/cm

Critical Diameter: meter

Critical Height: cm

Pressure Time: psi/g

Time to Peak msec

High Explosive Equivalency:
- PA Method %
- Free Air Pipe Bomb %
- Closed Chamber %

USE: M18A1 White Star Cluster Ground

APPLICATION: Night Signal

STORAGE:

	NATO	DoD
Hazards Class (Q/D)	1.1	7
Compatibility	G	A

COMPOSITION:

Ingredients	Parts by wt.
Aluminum	40
Potassium Perchlorate	60

DRAWING NUMBER: (PA-PFP600)

PARAMETRIC:

Auto Ignition Temperature: 735 °C

Decomposition Temperature: 867 °C

Density:
- Bulk 1.14 g/cm^3
- Loading 1.14-1.34 g/cm^3

Fuel Oxidizer Ratio: 0.67 :1

Gas Volume: 26 ml/g

Heat of Combustion: 2768 cal/g

Heat of Reaction: 1802 cal/g

STABILITY:

Hygroscopicity:
- 95 0.08 %
- 50 0.02 %

Thermal Stability:
- Loss in wt. 0 %
- Change in Configuration None

Vacuum Stability: 0.26 ml/gas/40hr

Weight Loss: 0.018 %

REFERENCE/NOTES:

Weingarten

SENSITIVITY:

Card Gap: No Detonation

Detonation: Mushrooming

Electrical Spark: 0.37 Joules

Electrostatic:
- Minimum Concentration 0.719 oz/ft^3
- Minimum Energy 50 Joules

Friction:
- Steel Shoe Complete Burning
- Fiber Shoe No Reaction
- Other

Ignition & Unconfined Burning:

	EXPLODED		BURN TIME	
Single Cube	Y	N X	<2	Sec
Multiple Cube	Y	N X	<2	Sec

Impact Sensitivity:
- BoM cm
- PA in
- BoE in

OUTPUT:

Burn Time:
- Density 1.14 g/cm^3 <0.4 sec/cm
- Density g/cm^3 sec/cm
- Density g/cm^3 sec/cm

Critical Diameter: 0.05 meter

Critical Height: 5 cm

Pressure Time: 438 psi/g

Time to Peak 436 msec

High Explosive Equivalency:
- PA Method 54 %
- Free Air Pipe Bomb %
- Closed Chamber %

USE:

APPLICATION: Night Aerial Photography

STORAGE:

	NATO	DoD
Hazards Class (Q/D)	1.1	7
Compatibility	G	A

NOMENCLATURE Photoflash Powder (3)

COMPOSITION:

Ingredients	Parts by wt.
Aluminum	40
Barium Nitrate	30
Potassium Perchlorate	30

DRAWING NUMBER: (PA-PFP1025)

PARAMETRIC:

Auto Ignition Temperature: 762 °C

Decomposition Temperature: 867 °C

Density:
- Bulk 1.25 g/cm^3
- Loading 1.7 g/cm^3

Fuel Oxidizer Ratio: 0.67:1

Gas Volume: 15 ml/g

Heat of Combustion: 2761 cal/g

Heat of Reaction: 1756 cal/g

STABILITY:

Hygroscopicity:
- 95 0.09 %
- 50 0.03 %

Thermal Stability:
- Loss in wt. 0 %
- Change in Configuration None

Vacuum Stability: 0.22 ml/gas/40hr

Weight Loss: 0.07 %

REFERENCE/NOTES:

Weingarten

SENSITIVITY:

Card Gap: No Detonation

Detonation: Mushrooming

Electrical Spark: 1.325 Joules

Electrostatic:
- Minimum Concentration 0.719 oz/ft^3
- Minimum Energy 50 Joules

Friction:
- Steel Shoe Snaps
- Fiber Shoe No Reaction
- Other

Ignition & Unconfined Burning:

	EXPLODED		BURN TIME
Single Cube	Y	N X	<2 Sec
Multiple Cube	Y	N X	<2 Sec

Impact Sensitivity:

BoM		cm
PA	>40	in
BoE	10	in

OUTPUT:

Burn Time:

Density	1.25	g/cm^3	<0.4 sec/cm
Density		g/cm^3	sec/cm
Density		g/cm^3	sec/cm

Critical Diameter: 0.05 meter

Critical Height: 5.08 cm

Pressure Time: 422 psi/g

- Time to Peak 348 msec

High Explosive Equivalency:

PA Method		%
Free Air Pipe Bomb	36	%
Closed Chamber		%

USE: T104

APPLICATION: Aerial Photography

STORAGE:

	NATO	DoD
Hazards Class (Q/D)	1.1	7
Compatibility	G	A

NOMENCLATURE Photoflash Powder (4)

COMPOSITION:

Ingredients	Parts by wt.
Magnesium/Aluminum Alloy	45.5
Barium Nitrate	54.5
Aluminum	4

DRAWING NUMBER:

PARAMETRIC:

Auto Ignition Temperature: 832 °C

Decomposition Temperature: 867 °C

Density:
- Bulk 1.34 g/cm^3
- Loading g/cm^3

Fuel Oxidizer Ratio: 0.83:1

Gas Volume: 14 ml/g

Heat of Combustion: 2610 cal/g

Heat of Reaction: 1602 cal/g

STABILITY:

Hygroscopicity:
- 95 0.092 %
- 50 0.01 %

Thermal Stability:
- Loss in wt. 0 %
- Change in Configuration None

Vacuum Stability: 0.17 ml/gas/40hr

Weight Loss: 0.07 %

REFERENCE/NOTES:

AMCP 706-188

SENSITIVITY:

Card Gap: No Detonation

Detonation: Mushrooming

Electrical Spark: 1.325 Joules

Electrostatic:
- Minimum Concentration 1.62 oz/ft^3
- Minimum Energy 50 Joules

Friction:
- Steel Shoe Snaps
- Fiber Shoe No Reaction
- Other

Ignition & Unconfined Burning:

	EXPLODED		BURN TIME	
Single Cube	Y	NX	<1	Sec
Multiple Cube	Y	NX	<1	Sec

Impact Sensitivity:
- BoM cm
- PA in
- BoE 10 in

OUTPUT:

Burn Time:
- Density g/cm^3 sec/cm
- Density g/cm^3 sec/cm
- Density g/cm^3 sec/cm

Critical Diameter: 0.05 meter

Critical Height: 5 cm

Pressure Time: psi/g

Time to Peak msec

High Explosive Equivalency:
- PA Method %
- Free Air Pipe Bomb %
- Closed Chamber %

USE:

APPLICATION: Aerial Photography

STORAGE:

	NATO	DoD
Hazards Class (Q/D)	1.1	7
Compatibility	G	A

COMPOSITION:

Ingredients	Parts by wt.
Strontium Nitrate	53.7
Polyvinyl Chloride	18.1
Magnesium 50/100	28.2

DRAWING NUMBER:

PARAMETRIC:

Auto Ignition Temperature: 488 °C

Decomposition Temperature: 577 °C

Density:
- Bulk 1.26 g/cm^3
- Loading 2.4-3.0 g/cm^3

Fuel Oxidizer Ratio: 0.53:1

Gas Volume: ml/g

Heat of Combustion: 7130 cal/g

Heat of Reaction: cal/g

STABILITY:

Hygroscopicity:
- 95 26.2 %
- 50 0.016 %

Thermal Stability:
- Loss in wt. 0 %
- Change in Configuration None

Vacuum Stability: ml/gas/40hr

Weight Loss: 0.037 %

REFERENCE/NOTES:

AMCP 706-185
TM9-1910
Ellern
McIntyre
Cabbage & Ewing

SENSITIVITY:

Card Gap: No Detonation

Detonation: 2 Samples Burned

Electrical Spark: >8 Joules

Electrostatic:
- Minimum Concentration 1.62 oz/ft^3
- Minimum Energy 0.0028 Joules

Friction:
- Steel Shoe No Reaction
- Fiber Shoe No Reaction
- Other

Ignition & Unconfined Burning:

	EXPLODED		BURN TIME	
Single Cube	Y	N X	24	Sec
Multiple Cube	Y	N X	27	Sec

Impact Sensitivity:
- BoM cm
- PA in
- BoE 3.75 in

OUTPUT:

Burn Time:
- Density 1.26 g/cm^3 4.72 sec/cm
- Density g/cm^3 sec/cm
- Density g/cm^3 sec/cm

Critical Diameter: .53 meter

Critical Height: 15 cm

Pressure Time: psi/g

Time to Peak msec

High Explosive Equivalency:
- PA Method 8 %
- Free Air Pipe Bomb %
- Closed Chamber %

USE: 5.56MM Round; 0.30 Cal Round
7.62MM NATO Tracer Bullet
0.50 Cal M1 Cartridge

APPLICATION: Main Tracer Charge

STORAGE:

	NATO	DoD
Hazards Class (Q/D)	1.1	7
Compatibility	G	A

COMPOSITION:

Ingredients	Parts by wt.
Magnesium 50/100	27
Strontium Nitrate	33
Strontium Peroxide	26
Calcium Resinate	9
Strontium Oxalate	5

DRAWING NUMBER:

PARAMETRIC:

Auto Ignition Temperature: 510 °C

Decomposition Temperature: 546 °C

Density:
- Bulk 1.18 g/cm^3
- Loading 2.4-3.0 g/cm^3

Fuel Oxidizer Ratio: 0.45:1

Gas Volume: ml/g

Heat of Combustion: 5623 cal/g

Heat of Reaction: cal/g

STABILITY:

Hygroscopicity:
- 95 7.8 %
- 50 0.11 %

Thermal Stability:
- Loss in wt. 0 %
- Change in Configuration None

Vacuum Stability: ml/gas/40hr

Weight Loss: 0.046 %

REFERENCE/NOTES:

AMCP 706-185
Caven, J.J. & Stevenson, T.
McIntyre
McKown

SENSITIVITY:

Card Gap: No Detonation

Detonation: Sample Burned

Electrical Spark: 8 Joules

Electrostatic:
- Minimum Concentration 1.62 oz/ft^3
- Minimum Energy 0.0028 Joules

Friction:
- Steel Shoe No Reaction
- Fiber Shoe No Reaction
- Other

Ignition & Unconfined Burning:

	EXPLODED		BURN TIME	
Single Cube	Y	NX	18	Sec
Multiple Cube	Y	NX	21	Sec

Impact Sensitivity:
- BoM cm
- PA in
- BoE 10 in

OUTPUT:

Burn Time:
- Density 1.18 g/cm^3 3.54 sec/cm
- Density g/cm^3 sec/cm
- Density g/cm^3 sec/cm

Critical Diameter: meter

Critical Height: cm

Pressure Time: psi/g

Time to Peak msec

High Explosive Equivalency:
- PA Method <10 %
- Free Air Pipe Bomb %
- Closed Chamber %

USE: 0.50 Cal M1 2nd Charge; 0.50 Cal M10 1st and 2nd Charge;0.50 Cal M17 2nd Charge; 0.50 Cal M20 2nd Charge; 0.45 Cal M26 1st Charge

APPLICATION: Main Tracer Charge

STORAGE:

	NATO	DoD
Hazards Class (Q/D)	1.1	7
Compatibility	G	A

NOMENCLATURE Tracer Mixture (3)

COMPOSITION:

Ingredients	Parts by wt.
Magnesium	46
Gilsonite	3
Hexachlorobenzene*	4
Strontium Nitrate	18
Potassium Perchlorate	29

*Newer formulation may have substituted PVC

DRAWING NUMBER:

PARAMETRIC:

Auto Ignition Temperature: 421 °C

Decomposition Temperature: 476 °C

Density:
- Bulk 0.95 g/cm^3
- Loading 2.6-3.6 g/cm^3

Fuel Oxidizer Ratio: 0.98:1

Gas Volume: ml/g

Heat of Combustion: 3316 cal/g

Heat of Reaction: cal/g

STABILITY:

Hygroscopicity:
- 95 11.13 %
- 50 0.17 %

Thermal Stability:
- Loss in wt. 0.98 %
- Change in Configuration None

Vacuum Stability: ml/gas/40hr

Weight Loss: 0.053 %

REFERENCE/NOTES:

Ellern

SENSITIVITY:

Card Gap: No Detonation

Detonation: No Detonation

Electrical Spark: 2 Joules

Electrostatic:
- Minimum Concentration 0.719 oz/ft^3
- Minimum Energy 0.5 Joules

Friction:
- Steel Shoe No Reaction
- Fiber Shoe No Reaction
- Other

Ignition & Unconfined Burning:

	EXPLODED		BURN TIME	
Single Cube	Y	NX	11	Sec
Multiple Cube	Y	NX	14	Sec

Impact Sensitivity:
- BoM cm
- PA in
- BoE 10 in

OUTPUT:

Burn Time:
- Density 0.95 g/cm^3 2.16 sec/cm
- Density g/cm^3 sec/cm
- Density g/cm^3 sec/cm

Critical Diameter: meter

Critical Height: cm

Pressure Time: psi/g

Time to Peak msec

High Explosive Equivalency:
- PA Method %
- Free Air Pipe Bomb %
- Closed Chamber %

USE:

APPLICATION: Main Tracer Charge

STORAGE:

	NATO	DoD
Hazards Class (Q/D)	1.1	7
Compatibility	G	A

COMPOSITION:

Ingredients	Parts by wt.
Magnesium Alluminum Alloy	37
Strontium Nitrate	56
Polyvinyl Chloride	7

DRAWING NUMBER: (PA-TR45)

PARAMETRIC:

Auto Ignition Temperature: 529 °C

Decomposition Temperature: 625 °C

Density:
- Bulk 0.91 g/cm^3
- Loading 2.6-3.6 g/cm^3

Fuel Oxidizer Ratio: 0.66:1

Gas Volume: ml/g

Heat of Combustion: 2964 cal/g

Heat of Reaction: cal/g

STABILITY:

Hygroscopicity:
- 95 7.8 %
- 50 0.014 %

Thermal Stability:
- Loss in wt. 0 %
- Change in Configuration None

Vacuum Stability: ml/gas/40hr

Weight Loss: 0.026 %

REFERENCE/NOTES:

TM9-1910
Carrazza & Kaye

SENSITIVITY:

Card Gap: No Detonation

Detonation: No Detonation

Electrical Spark: 1.125 Joules

Electrostatic:
- Minimum Concentration 0.719 oz/ft^3
- Minimum Energy 50 Joules

Friction:
- Steel Shoe Snaps
- Fiber Shoe No Reaction
- Other

Ignition & Unconfined Burning:

	EXPLODED		BURN TIME	
Single Cube	Y	N X	12	Sec
Multiple Cube	Y	N X	13	Sec

Impact Sensitivity:
- BoM cm
- PA 25 in
- BoE 15 in

OUTPUT:

Burn Time:
- Density 0.91 g/cm^3 2.36 sec/cm
- Density g/cm^3 sec/cm
- Density g/cm^3 sec/cm

Critical Diameter: meter

Critical Height: cm

Pressure Time: psi/g
- Time to Peak msec

High Explosive Equivalency:
- PA Method %
- Free Air Pipe Bomb %
- Closed Chamber %

USE:

APPLICATION: Main Tracer Charge Tracking

STORAGE:

	NATO	DoD
Hazards Class (Q/D)	1.1	7
Compatibility	G	A

NOMENCLATURE R20C Igniter Mixture (5)

COMPOSITION:

Ingredients	Parts by wt.
Strontium Peroxide	65.6
Calcium Resinate	6
Barium Peroxide	3.4
Lead Dioxide	3.4
Magnesium	21.6

DRAWING NUMBER:

PARAMETRIC:

Auto Ignition Temperature: 404 °C

Decomposition Temperature: 477 °C

Density:
- Bulk 0.96 g/cm^3
- Loading 2.2-2.8 g/cm^3

Fuel Oxidizer Ratio: 0.3:1

Gas Volume: ml/g

Heat of Combustion: 8160 cal/g

Heat of Reaction: cal/g

STABILITY:

Hygroscopicity:
- 95 1.16 %
- 50 0.09 %

Thermal Stability:
- Loss in wt. 0 %
- Change in Configuration None

Vacuum Stability: ml/gas/40hr

Weight Loss: 0.026 %

REFERENCE/NOTES:

Cabbage & Ewing
McIntyre
King & Koger

SENSITIVITY:

Card Gap: No Detonation

Detonation: No Detonation

Electrical Spark: 1.25 Joules

Electrostatic:
- Minimum Concentration 0.719 oz/ft^3
- Minimum Energy 0.05 Joules

Friction:
- Steel Shoe No Reaction
- Fiber Shoe No Reaction
- Other

Ignition & Unconfined Burning:

	EXPLODED		BURN TIME
Single Cube	Y	N X	3 Sec
Multiple Cube	Y	N X	5 Sec

Impact Sensitivity:
- BoM cm
- PA in
- BoE 10 in

OUTPUT:

Burn Time:
- Density 0.96 g/cm^3 0.6 sec/cm
- Density g/cm^3 sec/cm
- Density g/cm^3 sec/cm

Critical Diameter: meter

Critical Height: 53 cm

Pressure Time: psi/g

- Time to Peak msec

High Explosive Equivalency:
- PA Method 0 %
- Free Air Pipe Bomb %
- Closed Chamber %

USE: 0.30 Cal Ammunition

APPLICATION: Tracer Fuze Train

STORAGE:

	NATO	DoD
Hazards Class (Q/D)	1.1	7
Compatibility	G	A

NOMENCLATURE I559 Igniter Mixture (6)

COMPOSITION:

Ingredients	Parts by wt.
I136 Premix*	79.5
Premix**	20.5

*(I136 Premix = 90% Strontium Peroxide; 10% Calcium)
**(23.3% Lead Dioxide; 77.7 Magnesium Type 3)

DRAWING NUMBER:

PARAMETRIC:

Auto Ignition Temperature: 635 °C

Decomposition Temperature: 756 °C

Density:
Bulk 1.34 g/cm^3
Loading g/cm^3

Fuel Oxidizer Ratio: 0.26:1

Gas Volume: ml/g

Heat of Combustion: cal/g

Heat of Reaction: cal/g

STABILITY:

Hygroscopicity:
95 1.16 %
50 0.07 %

Thermal Stability:
Loss in wt. 0 %
Change in Configuration None

Vacuum Stability: ml/gas/40hr

Weight Loss: 0.08 %

REFERENCE/NOTES:

McIntyre
McKown

SENSITIVITY:

Card Gap: No Detonation

Detonation: Complete Burning

Electrical Spark: 0.05 Joules

Electrostatic:
Minimum Concentration <0.021 oz/ft^3
Minimum Energy 1 Joules

Friction:
Steel Shoe No Reaction
Fiber Shoe No Reaction
Other

Ignition & Unconfined Burning:

	EXPLODED		BURN TIME	
Single Cube	Y	NX	9	Sec
Multiple Cube	Y	NX	14	Sec

Impact Sensitivity:

BoM		cm
PA		in
BoE	10	in

OUTPUT:

Burn Time:

Density	1.52	g/cm^3	1.77	sec/cm
Density	1.99	g/cm^3	2.54	sec/cm
Density		g/cm^3		sec/cm

Critical Diameter: meter

Critical Height: cm

Pressure Time: psi/g

Time to Peak msec

High Explosive Equivalency:
PA Method 6 %
Free Air Pipe Bomb %
Closed Chamber %

USE: 5.56 Round

APPLICATION: Incremental Charge 5.56

STORAGE:

	NATO	DoD
Hazards Class (Q/D)	1.1	7
Compatibility	G	A

NOMENCLATURE I560 Subigniter Mixture (7)

COMPOSITION:

Ingredients	Parts by wt.
Magnesium	27.5
Strontium Nitrate	27.5
Strontium Peroxide	30
Polyvinyl Chloride	15

DRAWING NUMBER:

PARAMETRIC:

Auto Ignition Temperature: 856 °C

Decomposition Temperature: 926 °C

Density:
- Bulk 1.16 g/cm^3
- Loading 2.2-3.6 g/cm^3

Fuel Oxidizer Ratio: 0.48:1

Gas Volume: ml/g

Heat of Combustion: 3376 cal/g

Heat of Reaction: cal/g

STABILITY:

Hygroscopicity:
- 95 11.62 %
- 50 2.0 %

Thermal Stability:
- Loss in wt. 0.98%
- Change in Configuration None

Vacuum Stability: ml/gas/40hr

Weight Loss: 0.051%

REFERENCE/NOTES:

McIntyre
McKown

SENSITIVITY:

Card Gap: No Detonation

Detonation: Complete Burning

Electrical Spark: 0.2 Joules

Electrostatic:
- Minimum Concentration 0.449 oz/ft^3
- Minimum Energy >10K Joules

Friction:
- Steel Shoe No Reaction
- Fiber Shoe No Reaction
- Other

Ignition & Unconfined Burning:

	EXPLODED		BURN TIME	
Single Cube	Y	NX	13	Sec
Multiple Cube	Y	NX	14.5	Sec

Impact Sensitivity:
- BoM cm
- PA 3.75 in
- BoE in

OUTPUT:

Burn Time:
- Density 1.29 g/cm^3 2.55 sec/cm
- Density g/cm^3 sec/cm
- Density g/cm^3 sec/cm

Critical Diameter: meter

Critical Height: cm

Pressure Time: psi/g
- Time to Peak msec

High Explosive Equivalency:
- PA Method 10 %
- Free Air Pipe Bomb %
- Closed Chamber %

USE: 5.56MM

APPLICATION: Incremental Charge

STORAGE:

	NATO	DoD
Hazards Class (Q/D)	1.1	7
Compatibility	G	A

COMPOSITION:

Ingredients	Parts by wt.
Magnesium	17
Barium Peroxide	81
Calcium Resinate	2

DRAWING NUMBER: (PA-SI-150)

PARAMETRIC:

Auto Ignition Temperature: 375 °C

Decomposition Temperature: 445 °C

Density:
Bulk 1.09 g/cm^3
Loading 2.2-3.2 g/cm^3

Fuel Oxidizer Ratio: 0.2:1

Gas Volume: ml/g

Heat of Combustion: 600 cal/g

Heat of Reaction: cal/g

STABILITY:

Hygroscopicity:
95 1.1 %
50 0.08 %

Thermal Stability:
Loss in wt. 0 %
Change in Configuration None

Vacuum Stability: ml/gas/40hr

Weight Loss: 0.06%

REFERENCE/NOTES:

TM9-1910
Ellern

SENSITIVITY:

Card Gap: No Detonation

Detonation: Complete Burning

Electrical Spark: 1.25 Joules

Electrostatic:
Minimum Concentration 0.719 oz/ft^3
Minimum Energy 10K Joules

Friction:
Steel Shoe Snaps
Fiber Shoe No Reaction
Other

Ignition & Unconfined Burning:

	EXPLODED		BURN TIME	
Single Cube	Y	N X	14.5	Sec
Multiple Cube	Y	N X	16	Sec

Impact Sensitivity:

BoM		cm
PA	23	in
BoE	10	in

OUTPUT:

Burn Time:
Density 1.09 g/cm^3 2.85 sec/cm
Density g/cm^3 sec/cm
Density g/cm^3 sec/cm

Critical Diameter: meter

Critical Height: cm

Pressure Time: psi/g
Time to Peak msec

High Explosive Equivalency:
PA Method %
Free Air Pipe Bomb %
Closed Chamber %

USE: M81 Projectile 40MM, AP-T
M81A1 Projectile 40MM, AP-T

APPLICATION: Igniter Mix for Tracer Composition

STORAGE:

	NATO	DoD
Hazards Class (Q/D)	1.1	7
Compatibility	G	A

NOMENCLATURE Igniter Mixture (9)

COMPOSITION:

Ingredients	Parts by wt.
Strontium Peroxide	90
Calcium Resinate	10

DRAWING NUMBER: I-136

PARAMETRIC:

Auto Ignition Temperature: 600 °C

Decomposition Temperature: 656 °C

Density:
- Bulk 1.21 g/cm^3
- Loading 2.6-3.4 g/cm^3

Fuel Oxidizer Ratio: 0.11 :1

Gas Volume: ml/g

Heat of Combustion: cal/g

Heat of Reaction: cal/g

STABILITY:

Hygroscopicity:
- 95 1.07 %
- 50 0.03 %

Thermal Stability:
- Loss in wt. 0 %
- Change in Configuration None

Vacuum Stability: ml/gas/40hr

Weight Loss: 0.06 %

REFERENCE/NOTES:

A. P. Hardt

SENSITIVITY:

Card Gap: No Detonation

Detonation: No Detonation

Electrical Spark: 0.05 Joules

Electrostatic:
- Minimum Concentration 0.021 oz/ft^3
- Minimum Energy 1 Joules

Friction:
- Steel Shoe Snaps
- Fiber Shoe No Reaction
- Other

Ignition & Unconfined Burning:

	EXPLODED		BURN TIME
Single Cube	Y	N X	9 Sec
Multiple Cube	Y	N X	11 Sec

Impact Sensitivity:
- BoM cm
- PA in
- BoE 10 in

OUTPUT:

Burn Time:
- Density 1.21 g/cm^3 1.77 sec/cm
- Density g/cm^3 sec/cm
- Density g/cm^3 sec/cm

Critical Diameter: meter

Critical Height: cm

Pressure Time: psi/g
- Time to Peak msec

High Explosive Equivalency:
- PA Method %
- Free Air Pipe Bomb %
- Closed Chamber %

USE: 7.76MM NATO Tracer Round

APPLICATION: Primary Initiating Charge

STORAGE:

	NATO	DoD
Hazards Class (Q/D)	1.1	7
Compatibility	G	A

NOMENCLATURE Subigniter Mixture (10)

COMPOSITION:

Ingredients	Parts by wt.
Magnesium	15
Strontium Peroxide	76.5
Calcium Resinate	8.5

DRAWING NUMBER: I280

PARAMETRIC:

Auto Ignition Temperature: 496 °C

Decomposition Temperature: 539 °C

Density:
Bulk 1.19 g/cm³
Loading 2.6-3.6 g/cm³

Fuel Oxidizer Ratio: 0.3:1

Gas Volume: ml/g

Heat of Combustion: cal/g

Heat of Reaction: cal/g

STABILITY:

Hygroscopicity:
95 1.14 %
50 0.01 %

Thermal Stability:
Loss in wt. 0 %
Change in Configuration None

Vacuum Stability: ml/gas/40hr

Weight Loss: 0.036%

REFERENCE/NOTES:

A. P. Hardt

SENSITIVITY:

Card Gap: No Detonation

Detonation: Complete Burning

Electrical Spark: 0.05 Joules

Electrostatic:
Minimum Concentration 0.021 oz/ft³
Minimum Energy 1.125 Joules

Friction:
Steel Shoe Snaps
Fiber Shoe No Reaction
Other

Ignition & Unconfined Burning:

	EXPLODED			BURN TIME	
Single Cube	Y	N	X	14	Sec
Multiple Cube	Y	N	X	15	Sec

Impact Sensitivity:

BoM		cm
PA		in
BoE	10	in

OUTPUT:

Burn Time:

Density	1.19 g/cm³	2.76 sec/cm
Density	g/cm³	sec/cm
Density	g/cm³	sec/cm

Critical Diameter: meter

Critical Height: cm

Pressure Time: psi/g
Time to Peak msec

High Explosive Equivalency:
PA Method %
Free Air Pipe Bomb %
Closed Chamber %

USE: 7.76MM NATO Tracer Round

APPLICATION: Primary Initiating Charge

STORAGE:

	NATO	DoD
Hazards Class (Q/D)	1.1	7
Compatibility	G	A

NOMENCLATURE White Smoke (1)

COMPOSITION:

Ingredients	Parts by wt.
Hexachloroethane	43.53±0.5
Zinc Oxide	46.47±0.5
Aluminum Powder*	9±3

*Burning time shall be changed by adjusting the aluminum content but in no case will the ratio of Hexachloroethan and zinc oxide be altered.

DRAWING NUMBER: B143-1-1

PARAMETRIC:

Auto Ignition Temperature: 167 °C

Decomposition Temperature: 193 °C

Density:
- Bulk 1.14 g/cm^3
- Loading 1.6-1.9 g/cm^3

Fuel Oxidizer Ratio: 0.2:1

Gas Volume: ml/g

Heat of Combustion: 940 cal/g

Heat of Reaction: cal/g

STABILITY:

Hygroscopicity:
- 95 26 %
- 50 >0.6 %

Thermal Stability:
- Loss in wt. 43 %
- Change in Configuration Yes

Vacuum Stability: ml/gas/40hr

Weight Loss: 43 %

REFERENCE/NOTES:

Technical Reports
GE-MTSD-R035
GE-MTSD-R059
GE-EA4021
GE-EA5100C
EMCR 75017
EMCR 75022
GE-EA-4D51
AMCP 706-185
TM3-215
Ellern

SENSITIVITY:

Card Gap: No Detonation

Detonation: No Detonation, Burning

Electrical Spark: 0.122 Joules

Electrostatic:
- Minimum Concentration 1.62 oz/ft^3
- Minimum Energy ≫50K Joules

Friction:
- Steel Shoe No Reaction
- Fiber Shoe No Reaction
- Other

Ignition & Unconfined Burning:

	EXPLODED		BURN TIME
Single Cube	Y	NX	1248 Sec
Multiple Cube	Y	NX	1248 Sec

Impact Sensitivity:
- BoM cm
- PA in
- BoE 10 in

OUTPUT:

Burn Time:

Density		g/cm^3		sec/cm
Density		g/cm^3		sec/cm
Density	1.6-1.9	g/cm^3	9.8	sec/cm

Critical Diameter: >1 meter

Critical Height: >218 cm

Pressure Time: psi/g

Time to Peak msec

High Explosive Equivalency:
- PA Method 0 %
- Free Air Pipe Bomb 0 %
- Closed Chamber %

USE: Signal Smoke, Aircraft White XMN6 Bomb Smoke, BLU 16B; Canister, Smoke 155MM M1; Canister, Smoke 155MM, M2; Grenade, Handsmoke AN-M8; Canister Smoke 105MM, M1

APPLICATION: Screening and Signaling

STORAGE:

	NATO	DoD
Hazards Class (Q/D)	1.3	2
Compatibility	G	A

NOMENCLATURE Red Phosphorus (2)

COMPOSITION:

Ingredients	Parts by wt.
Red Phosphorus	64
Methylene Chloride/Butyl Rubber	37

DRAWING NUMBER:

PARAMETRIC:

Auto Ignition Temperature: 460 °C

Decomposition Temperature: 530 °C

Density:
- Bulk 1.6 g/cm^3
- Loading 1.9-2.2 g/cm^3

Fuel Oxidizer Ratio: 2 :1

Gas Volume: ml/g

Heat of Combustion: cal/g

Heat of Reaction: cal/g

STABILITY:

Hygroscopicity:
- 95 %
- 50 0.3 %

Thermal Stability:
- Loss in wt. 0 %
- Change in Configuration None

Vacuum Stability: ml/gas/40hr

Weight Loss: 0.32%

REFERENCE/NOTES:

McIntyre

SENSITIVITY:

Card Gap: No Detonation

Detonation: Burning

Electrical Spark: 3.12 Joules

Electrostatic:
- Minimum Concentration oz/ft^3
- Minimum Energy Joules

Friction:
- Steel Shoe Complete Reaction
- Fiber Shoe Complete Reaction
- Other

Ignition & Unconfined Burning:

	EXPLODED			BURN TIME
Single Cube	Y	N	X	1200 Sec
Multiple Cube	Y	N	X	2580 Sec

Impact Sensitivity:
- BoM cm
- PA in
- BoE >15 in

OUTPUT:

Burn Time:
- Density 1.6 g/cm^3 236 sec/cm
- Density g/cm^3 sec/cm
- Density g/cm^3 sec/cm

Critical Diameter: >0.76 meter

Critical Height: >60 cm

Pressure Time: psi/g

Time to Peak msec

High Explosive Equivalency:
- PA Method 0 %
- Free Air Pipe Bomb %
- Closed Chamber %

USE: LAV, LAB-1

APPLICATION: Screening

STORAGE:

	NATO	DoD
Hazards Class (Q/D)	1.4	2
Compatibility	G	A

NOMENCLATURE White Smoke (3)

COMPOSITION:

Ingredients	Parts by wt.
Barium Nitrate	20
Red Phosphorus	80

DRAWING NUMBER:

PARAMETRIC:

Auto Ignition Temperature: 402 °C

Decomposition Temperature: 464 °C

Density:
- Bulk g/cm^3
- Loading g/cm^3

Fuel Oxidizer Ratio: 4.1:1

Gas Volume: ml/g

Heat of Combustion: 5090 cal/g

Heat of Reaction: cal/g

STABILITY:

Hygroscopicity:
- 95 10.84 %
- 50 0.28 %

Thermal Stability:
- Loss in wt. 0 %
- Change in Configuration None

Vacuum Stability: 0.06 ml/gas/40hr

Weight Loss: 0.71 %

REFERENCE/NOTES:

Weingarten

SENSITIVITY:

Card Gap: No Detonation

Detonation: Complete Burning

Electrical Spark: Joules

Electrostatic:
- Minimum Concentration oz/ft^3
- Minimum Energy Joules

Friction:
- Steel Shoe Complete Burning
- Fiber Shoe Complete Burning
- Other

Ignition & Unconfined Burning:

	EXPLODED		BURN TIME	
Single Cube	Y	N	x >1200	Sec
Multiple Cube	Y	N	x >1200	Sec

Impact Sensitivity:

BoM		cm
PA	8	in
BoE	10	in

OUTPUT:

Burn Time:

Density	g/cm^3	236	sec/cm
Density	g/cm^3		sec/cm
Density	g/cm^3		sec/cm

Critical Diameter: meter

Critical Height: cm

Pressure Time: psi/g

- Time to Peak msec

High Explosive Equivalency:
- PA Method %
- Free Air Pipe Bomb %
- Closed Chamber %

USE:

APPLICATION: Signal, Screening Smoke

STORAGE:

	NATO	DoD
Hazards Class (Q/D)	1.1	7
Compatibility		

NOMENCLATURE White Smoke (4)

COMPOSITION:

Ingredients	Parts by wt.
Ammonium Perchlorate	27.6
VAAR	3.5
Dechlorane	30.7
Zinc Oxide	34.6
Aluminum	3.6

DRAWING NUMBER: (PA-SW253)

PARAMETRIC:

Auto Ignition Temperature: 314 °C

Decomposition Temperature: 363 °C

Density:
Bulk g/cm^3
Loading g/cm^3

Fuel Oxidizer Ratio: 0.58 :1

Gas Volume: ml/g

Heat of Combustion: 1181 cal/g

Heat of Reaction: cal/g

STABILITY:

Hygroscopicity:
95 0.51 %
50 0.13 %

Thermal Stability:
Loss in wt. 0 %
Change in Configuration None

Vacuum Stability: 0.08 ml/gas/40hr

Weight Loss: %

REFERENCE/NOTES:

Weingarten

SENSITIVITY:

Card Gap: No Detonation

Detonation: No Detonation, Burning

Electrical Spark: >11.02 Joules

Electrostatic:
Minimum Concentration oz/ft^3
Minimum Energy Joules

Friction:
Steel Shoe No Reaction
Fiber Shoe
Other

Ignition & Unconfined Burning:

	EXPLODED		BURN TIME	
Single Cube	Y	N X	10	Sec
Multiple Cube	Y	N X	16	Sec

Impact Sensitivity:

BoM		cm
PA	14	in
BoE	7	in

OUTPUT:

Burn Time:
Density g/cm^3 1.97 sec/cm
Density g/cm^3 sec/cm
Density g/cm^3 sec/cm

Critical Diameter: meter

Critical Height: cm

Pressure Time: 341 psi/g
Time to Peak 1211 msec

High Explosive Equivalency:
PA Method %
Free Air Pipe Bomb 0 %
Closed Chamber %

USE:

APPLICATION: Signal Screening

STORAGE:

	NATO	DoD
Hazards Class (Q/D)	1.1	7
Compatibility		

NOMENCLATURE Green Smoke IV (1)

COMPOSITION:

Ingredients	Parts by wt.
Dye, Yellow	4
Benzenthrone	8
Dye Solvent, Green	28
Sodium Bicarbonate	22.6
Potassium Chlorate	27
Sulfur	10.4

DRAWING NUMBER: B143-2-1

PARAMETRIC:

Auto Ignition Temperature: 192 °C

Decomposition Temperature: 222 °C

Density:
- Bulk 0.89 g/cm^3
- Loading 1.3-1.63 g/cm^3

Fuel Oxidizer Ratio: 0.39 :1

Gas Volume: 21.6 ml/g

Heat of Combustion: 2190 cal/g

Heat of Reaction: 1460 cal/g

STABILITY:

Hygroscopicity:
- 95 3.45 %
- 50 0.7 %

Thermal Stability:
- Loss in wt. 0 %
- Change in Configuration None

Vacuum Stability: 0.01 ml/gas/40hr

Weight Loss: 0.621 %

REFERENCE/NOTES:

King & Koger
Wilcox
McIntyre

SENSITIVITY:

Card Gap: No Detonation

Detonation: No Detonation

Electrical Spark: 0.131 Joules

Electrostatic:
- Minimum Concentration 0.007 oz/ft^3
- Minimum Energy >50K Joules

Friction:
- Steel Shoe No Reaction
- Fiber Shoe No Reaction
- Other

Ignition & Unconfined Burning:

	EXPLODED			BURN TIME	
Single Cube	Y	N	X	30	Sec
Multiple Cube	Y	N	X	100	Sec

Impact Sensitivity:
- BoM cm
- PA in
- BoE 15 in

OUTPUT:

Burn Time:
- Density 0.89 g/cm^3 5.9 sec/cm
- Density g/cm^3 21.8 sec/cm
- Density g/cm^3 sec/cm

Critical Diameter: >1 meter

Critical Height: >218 cm

Pressure Time:
- 200 psi/g
- Time to Peak 800 msec

High Explosive Equivalency:
- PA Method %
- Free Air Pipe Bomb 4 %
- Closed Chamber %

USE: Grenade, Hand, Smoke M18
Signal, Smoke Aircraft XM177

APPLICATION: Day Signal

STORAGE:

	NATO	DoD
Hazards Class (Q/D)	1.3	2
Compatibility		

NOMENCLATURE Green Smoke (2)

COMPOSITION:

Ingredients	Parts by wt.
Green Dye	40
Sodium Bicarbonate	24.6
Potassium Chlorate	25.4
Sulfur	10
Binder*	

*15/85 Dextrin/Water Binder

DRAWING NUMBER:

PARAMETRIC:

Auto Ignition Temperature: 163 °C

Decomposition Temperature: 190 °C

Density:
Bulk 0.72 g/cm^3
Loading 1.3-1.6 g/cm^3

Fuel Oxidizer Ratio: 0.39 :1

Gas Volume: 22 ml/g

Heat of Combustion: 1770 cal/g

Heat of Reaction: 1146 cal/g

STABILITY:

Hygroscopicity:
95 3.45 %
50 0.55 %

Thermal Stability:
Loss in wt. 0 %
Change in Configuration None

Vacuum Stability: 0.01 ml/gas/40hr

Weight Loss: 0.75 %

REFERENCE/NOTES:

McIntyre

SENSITIVITY:

Card Gap: No Detonation

Detonation: No Detonation

Electrical Spark: >8.0 Joules

Electrostatic:
Minimum Concentration 0.719 oz/ft^3
Minimum Energy ≥50K Joules

Friction:
Steel Shoe No Reaction
Fiber Shoe No Reaction
Other

Ignition & Unconfined Burning:

	EXPLODED		BURN TIME	
Single Cube	Y	N X	46	Sec
Multiple Cube	Y	N X	99	Sec

Impact Sensitivity:
BoM cm
PA in
BoE 10 in

OUTPUT:

Burn Time:
Density 0.65 g/cm^3 8.77 sec/cm
Density 0.72 g/cm^3 9.05 sec/cm
Density g/cm^3 sec/cm

Critical Diameter: >1.37 meter

Critical Height: >127 cm

Pressure Time: psi/g

Time to Peak msec

High Explosive Equivalency:
PA Method 5 %
Free Air Pipe Bomb %
Closed Chamber %

USE: Grenade M18

APPLICATION: Daytime Signal

STORAGE:

	NATO	DoD
Hazards Class (Q/D)	1.3	2
Compatibility		A

NOMENCLATURE Green Smoke (3)

COMPOSITION:

Ingredients	Parts by wt.
Green Dye	39.45
Yellow Dye	5.65
Potassium Chlorate	28.85
Sodium Bicarbonate	14.75
Sulfur	11.3
Binder*	

*Dextrin/Water 15/85

DRAWING NUMBER: B143-2-1

PARAMETRIC:

Auto Ignition Temperature: 154 °C

Decomposition Temperature: 178 °C

Density:
- Bulk 0.76 g/cm^3
- Loading 1.3-1.6 g/cm^3

Fuel Oxidizer Ratio: 0.39 :1

Gas Volume: 20 ml/g

Heat of Combustion: 1963 cal/g

Heat of Reaction: 1121 cal/g

STABILITY:

Hygroscopicity:
- 95 6.45 %
- 50 1.38 %

Thermal Stability:
- Loss in wt. 0 %
- Change in Configuration None

Vacuum Stability: 0.01 ml/gas/40hr

Weight Loss: 0.85 %

REFERENCE/NOTES:

McIntyre

SENSITIVITY:

Card Gap: No Detonation

Detonation: No Detonation

Electrical Spark: >8 Joules

Electrostatic:
- Minimum Concentration >1.62 oz/ft^3
- Minimum Energy ≥50K Joules

Friction:
- Steel Shoe No Reaction
- Fiber Shoe No Reaction
- Other

Ignition & Unconfined Burning:

	EXPLODED		BURN TIME	
Single Cube	Y	N X	20	Sec
Multiple Cube	Y	N X	27	Sec

Impact Sensitivity:
- BoM cm
- PA in
- BoE 10 in

OUTPUT:

Burn Time:
- Density 0.74 g/cm^3 8.84 sec/cm
- Density 0.76 g/cm^3 3.93 sec/cm
- Density g/cm^3 sec/cm

Critical Diameter: >1.37 meter

Critical Height: >1.27 cm

Pressure Time: psi/g

Time to Peak msec

High Explosive Equivalency:
- PA Method 4 %
- Free Air Pipe Bomb %
- Closed Chamber %

USE: 40MM Signal

APPLICATION: Daylight Signal

STORAGE:

	NATO	DoD
Hazards Class (Q/D)	1.3	2
Compatibility		

NOMENCLATURE Green Smoke (4)

COMPOSITION:

Ingredients	Parts by wt.
Potassium Chlorate	31.5
Lactose	18
Magnesium Carbonate	3.5
Dye Yellow	4.7
Benzanthrane	9.4
Dye Solvent, Green	32.9

DRAWING NUMBER: B143-2-6

PARAMETRIC:

Auto Ignition Temperature: 170 °C

Decomposition Temperature: 196 °C

Density:
- Bulk: 0.8 g/cm^3
- Loading: 1.3-1.6 g/cm^3

Fuel Oxidizer Ratio: 0.57:1

Gas Volume: 14.3 ml/g

Heat of Combustion: 2960 cal/g

Heat of Reaction: 1781 cal/g

STABILITY:

Hygroscopicity:
- 95: 1.5 %
- 50: 0.5 %

Thermal Stability:
- Loss in wt.: 0 %
- Change in Configuration: None

Vacuum Stability: 0.01 ml/gas/40hr

Weight Loss: 0.462 %

REFERENCE/NOTES:

King & Koger
McIntyre

SENSITIVITY:

Card Gap: No Detonation

Detonation: No Detonation

Electrical Spark: 0.121 Joules

Electrostatic:
- Minimum Concentration: 0.007 oz/ft^3
- Minimum Energy: >50 Joules

Friction:
- Steel Shoe: No Reaction
- Fiber Shoe: No Reaction
- Other

Ignition & Unconfined Burning:

	EXPLODED		BURN TIME
Single Cube	Y	NX	33 Sec
Multiple Cube	Y	NX	36 Sec

Impact Sensitivity:
- BoM: cm
- PA: in
- BoE: 15 in

OUTPUT:

Burn Time:
- Density 0.8 g/cm^3 6.5 sec/cm
- Density g/cm^3 sec/cm
- Density g/cm^3 sec/cm

Critical Diameter: 0.83 meter

Critical Height: >127 cm

Pressure Time: psi/g

Time to Peak msec

High Explosive Equivalency:
- PA Method %
- Free Air Pipe Bomb 11 %
- Closed Chamber %

USE: Canister, 155, M3, Smoke
Canister, 155, MM

APPLICATION: Day Signal

STORAGE:

	NATO	DoD
Hazards Class (Q/D)	1.3	7
Compatibility		

NOMENCLATURE Green Smoke (5)

COMPOSITION:

Ingredients	Parts by wt.
Potassium Chlorate	28
Sugar	16
Sodium Bicarbonate	4
Benzanthrone	10
Dye Solvent, Green 3	33
Indanthrens Golden Yellow	5
Sil-O-Cel* (Binder)	4

*Trade Name Johns-Manville Corp.

DRAWING NUMBER:

PARAMETRIC:

Auto Ignition Temperature: 176 °C

Decomposition Temperature: 185 °C

Density:
- Bulk 0.75-0.85 g/cm^3
- Loading 1.16-1.58 g/cm^3

Fuel Oxidizer Ratio: 0.57:1

Gas Volume: ml/g

Heat of Combustion: cal/g

Heat of Reaction: cal/g

STABILITY:

Hygroscopicity:
- 95 %
- 50 0.6 %

Thermal Stability:
- Loss in wt. 0 %
- Change in Configuration None

Vacuum Stability: 0.01 ml/gas/40hr

Weight Loss: %

REFERENCE/NOTES:

Webster

SENSITIVITY:

Card Gap: No Detonation

Detonation: No Detonation

Electrical Spark: 0.5 Joules

Electrostatic:
- Minimum Concentration oz/ft^3
- Minimum Energy Joules

Friction:
- Steel Shoe No Reaction
- Fiber Shoe No Reaction
- Other

Ignition & Unconfined Burning:

	EXPLODED		BURN TIME	
Single Cube	Y	N X	33	Sec
Multiple Cube	Y	N X	47	Sec

Impact Sensitivity:
- BoM cm
- PA in
- BoE 15 in

OUTPUT:

Burn Time:
- Density 0.75-0.85 g/cm^3 6.5 sec/cm
- Density g/cm^3 sec/cm
- Density g/cm^3 sec/cm

Critical Diameter: meter

Critical Height: cm

Pressure Time: psi/g

Time to Peak msec

High Explosive Equivalency:
- PA Method %
- Free Air Pipe Bomb %
- Closed Chamber %

USE: MK117 Signal

APPLICATION: Day Signal

STORAGE:

	NATO	DoD
Hazards Class (Q/D)	1.3	2
Compatibility		

NOMENCLATURE Green Smoke (6)

COMPOSITION:

Ingredients	Parts by wt.
Potassium Chlorate	31
VAAR	2
Sugar	18.5
Dye Yellow	15.5
Dye Green	33

DRAWING NUMBER: (PA-SG202)

PARAMETRIC:

Auto Ignition Temperature: 130 °C

Decomposition Temperature: 151 °C

Density:
- Bulk 0.76 g/cm^3
- Loading 1.3-1.6 g/cm^3

Fuel Oxidizer Ratio: 0.58:1

Gas Volume: 22 ml/g

Heat of Combustion: 4688 cal/g

Heat of Reaction: 428 cal/g

STABILITY:

Hygroscopicity:
- 95 10 %
- 50 0.66 %

Thermal Stability:
- Loss in wt. 0 %
- Change in Configuration None

Vacuum Stability: Burned 16 Hours ml/gas/40hr

Weight Loss: %

REFERENCE/NOTES:

TM9-1370-203-12

SENSITIVITY:

Card Gap: No Detonation

Detonation: No Detonation

Electrical Spark: >11.02 Joules

Electrostatic:
- Minimum Concentration oz/ft^3
- Minimum Energy Joules

Friction:
- Steel Shoe No Reaction
- Fiber Shoe No Reaction
- Other

Ignition & Unconfined Burning:

	EXPLODED		BURN TIME	
Single Cube	Y	N X	2	Sec
Multiple Cube	Y	N X	16	Sec

Impact Sensitivity:

BoM		cm
PA	25	in
BoE	10	in

OUTPUT:

Burn Time:
- Density 0.76 g/cm^3 0.4 sec/cm
- Density g/cm^3 sec/cm
- Density g/cm^3 sec/cm

Critical Diameter: meter

Critical Height: cm

Pressure Time: 609 psi/g
- Time to Peak 1750 msec

High Explosive Equivalency:
- PA Method %
- Free Air Pipe Bomb %
- Closed Chamber %

USE: Smoke, Ground, Green M65

APPLICATION: Signal, Daylight launched from rifle grenade launcher

STORAGE:

	NATO	DoD
Hazards Class (Q/D)	1.1	7
Compatibility		

NOMENCLATURE Green Smoke (7)

COMPOSITION:

Ingredients	Parts by wt.
Potassium Chlorate	31
Sodium Bicarbonate	3
VAAR	2
Asbestos Powder	2.5
Sugar	22
Green Dye	30.7
Smoke Yellow B10	10.8

DRAWING NUMBER: 8797998

PARAMETRIC:

Auto Ignition Temperature: 147 °C

Decomposition Temperature: 170 °C

Density:
- Bulk: 0.83 g/cm^3
- Loading: 1.3-1.6 g/cm^3

Fuel Oxidizer Ratio: 0.71:1

Gas Volume: 23 ml/g

Heat of Combustion: 4142 cal/g

Heat of Reaction: 390 cal/g

STABILITY:

Hygroscopicity:
- 95: 9.56 %
- 50: 0.2 %

Thermal Stability:
- Loss in wt.: 0 %
- Change in Configuration: None

Vacuum Stability: 0.98 ml/gas/40hr

Weight Loss: 0.019 %

REFERENCE/NOTES:

TM9-1370-203-12
Weingarten

SENSITIVITY:

Card Gap: No Detonation

Detonation: No Detonation

Electrical Spark: 11.02 Joules

Electrostatic:
- Minimum Concentration: 1.62 oz/ft^3
- Minimum Energy: >50K Joules

Friction:
- Steel Shoe: No Reaction
- Fiber Shoe: No Reaction
- Other

Ignition & Unconfined Burning:

	EXPLODED		BURN TIME	
Single Cube	Y	NX	10	Sec
Multiple Cube	Y	NX	20	Sec

Impact Sensitivity:
- BoM: cm
- PA: 22 in
- BoE: 15 in

OUTPUT:

Burn Time:
- Density 0.83 g/cm^3 1.97 sec/cm
- Density g/cm^3 sec/cm
- Density g/cm^3 sec/cm

Critical Diameter: meter

Critical Height: cm

Pressure Time: 13.7 psi/g
- Time to Peak: 7750 msec

High Explosive Equivalency:
- PA Method: 8 %
- Free Air Pipe Bomb: %
- Closed Chamber: %

USE:
Smoke, Ground, Green M167
Smoke, Ground, Green M128A1

APPLICATION: Signal (Daylight) Hand Held

STORAGE:

	NATO	DoD
Hazards Class (Q/D)	1.1	7
Compatibility		

NOMENCLATURE Green Smoke - VI (8)

COMPOSITION:

Ingredients	Parts by wt.
Potassium Chlorate	23
Sulfur	9
Sodium Bicarbonate	26
Dye Green	42

DRAWING NUMBER: MS588

PARAMETRIC:

Auto Ignition Temperature: 179 °c

Decomposition Temperature: 207 °c

Density:
- Bulk 0.82 g/cm^3
- Loading 1.3-1.6 g/cm^3

Fuel Oxidizer Ratio: 0.39 :1

Gas Volume: ml/g

Heat of Combustion: 2057 cal/g

Heat of Reaction: 813 cal/g

STABILITY:

Hygroscopicity:
- 95 2.96 %
- 50 0.7 %

Thermal Stability:
- Loss in wt. 0 %
- Change in Configuration None

Vacuum Stability: 0.11 ml/gas/40hr

Weight Loss: 0.69 %

REFERENCE/NOTES:

Pollard & Arnold

SENSITIVITY:

Card Gap: No Detonation

Detonation: No Detonation

Electrical Spark: 0.152 Joules

Electrostatic:
- Minimum Concentration 0.03 oz/ft^3
- Minimum Energy 50 Joules

Friction:
- Steel Shoe No Reaction
- Fiber Shoe No Reaction
- Other

Ignition & Unconfined Burning:

	EXPLODED		BURN TIME	
Single Cube	Y	N X	27	Sec
Multiple Cube	Y	N X	54	Sec

Impact Sensitivity:
- BoM cm
- PA in
- BoE 15 in

OUTPUT:

Burn Time:
- Density 0.82 g/cm^3 5.3 sec/cm
- Density g/cm^3 sec/cm
- Density g/cm^3 sec/cm

Critical Diameter: >0.83 meter

Critical Height: >127 cm

Pressure Time: psi/g

Time to Peak msec

High Explosive Equivalency:
- PA Method 4 %
- Free Air Pipe Bomb %
- Closed Chamber %

USE: Obsolete

APPLICATION: Day Signal

STORAGE:

	NATO	DoD
Hazards Class (Q/D)	1.3	2
Compatibility		

COMPOSITION:

Ingredients	Parts by wt.
Green Dye 3	26
Yellow Dye	15
Lactose	26
Potassium Chlorate	33

DRAWING NUMBER:

PARAMETRIC:

Auto Ignition Temperature: 165 °C

Decomposition Temperature: 191 °C

Density:
- Bulk 0.79 g/cm^3
- Loading 1.3-1.6 g/cm^3

Fuel Oxidizer Ratio: 0.79:1

Gas Volume: 16.3 ml/g

Heat of Combustion: 2763 cal/g

Heat of Reaction: 790 cal/g

STABILITY:

Hygroscopicity:
- 95 1.78 %
- 50 0.5 %

Thermal Stability:
- Loss in wt. 0 %
- Change in Configuration None

Vacuum Stability: 0.1 ml/gas/40hr

Weight Loss: 0.521 %

REFERENCE/NOTES:

Pollard & Arnold

SENSITIVITY:

Card Gap: No Detonation

Detonation: No Detonation

Electrical Spark: .136 Joules

Electrostatic:
- Minimum Concentration 0.016 oz/ft^3
- Minimum Energy 50 Joules

Friction:
- Steel Shoe No Reaction
- Fiber Shoe No Reaction
- Other

Ignition & Unconfined Burning:

	EXPLODED		BURN TIME	
Single Cube	Y	N X	30	Sec
Multiple Cube	Y	N X	56	Sec

Impact Sensitivity:
- BoM cm
- PA in
- BoE 15 in

OUTPUT:

Burn Time:
- Density 0.79 g/cm^3 5.9 sec/cm
- Density g/cm^3 sec/cm
- Density g/cm^3 sec/cm

Critical Diameter: > 0.9 meter

Critical Height: > 127 cm

Pressure Time: psi/g

Time to Peak msec

High Explosive Equivalency:
- PA Method 0 %
- Free Air Pipe Bomb %
- Closed Chamber %

USE: Obsolete

APPLICATION: Day Signal

STORAGE:

	NATO	DoD
Hazards Class (Q/D)	1.3	2
Compatibility		

NOMENCLATURE Green Smoke (10)

COMPOSITION:

Ingredients	Parts by wt.
1,4-di-p-toluidino (AQ)	28
Indanthrene GK (Golden Yellow)	12
Potassium Chlorate	35
Sugar Fine	23
Sodium Bicarbonate	2

DRAWING NUMBER:

PARAMETRIC:

Auto Ignition Temperature: 136 °C

Decomposition Temperature: 157 °C

Density:
- Bulk 0.77 g/cm^3
- Loading 1.3-1.6 g/cm^3

Fuel Oxidizer Ratio: 0.66:1

Gas Volume: 25 ml/g

Heat of Combustion: 3211 cal/g

Heat of Reaction: 945 cal/g

STABILITY:

Hygroscopicity:
- 95 11.4 %
- 50 0.7 %

Thermal Stability:
- Loss in wt. 0 %
- Change in Configuration None

Vacuum Stability: 0.1 ml/gas/40hr

Weight Loss: 0.746 %

REFERENCE/NOTES:

AMCP 706-188

SENSITIVITY:

Card Gap: No Detonation

Detonation: No Detonation

Electrical Spark: 0.5 Joules

Electrostatic:
- Minimum Concentration 0.024 oz/ft^3
- Minimum Energy 50 Joules

Friction:
- Steel Shoe No Reaction
- Fiber Shoe No Reaction
- Other

Ignition & Unconfined Burning:

	EXPLODED		BURN TIME
Single Cube	Y	N	12 Sec
Multiple Cube	Y	N	31 Sec

Impact Sensitivity:
- BoM cm
- PA in
- BoE 15 in

OUTPUT:

Burn Time:
- Density 0.86 g/cm^3 2.36 sec/cm
- Density g/cm^3 sec/cm
- Density g/cm^3 sec/cm

Critical Diameter: > 0.83 meter

Critical Height: > 127 cm

Pressure Time: psi/g

Time to Peak msec

High Explosive Equivalency:
- PA Method %
- Free Air Pipe Bomb %
- Closed Chamber %

USE: Rocket Parachute Ground Signal

APPLICATION: Day Signal

STORAGE:

	NATO	DoD
Hazards Class (Q/D)	1.3	2
Compatibility		

NOMENCLATURE Green Smoke (11)

COMPOSITION:

Ingredients	Parts by wt.
Dye Solvent Green	50
Potassium Chlorate	31.8
Lactose	16.7
Binder*	1.5

*Binder (Nitrocellulose/Acetone 8/92%)

DRAWING NUMBER: B143-2-7

PARAMETRIC:

Auto Ignition Temperature: 175 °C

Decomposition Temperature: 195 °C

Density:
- Bulk 0.8 g/cm^3
- Loading 1.3-1.6 g/cm^3

Fuel Oxidizer Ratio: 0.53 :1

Gas Volume: 15.1 ml/g

Heat of Combustion: 2955 cal/g

Heat of Reaction: 1163 cal/g

STABILITY:

Hygroscopicity:
- 95 2.3 %
- 50 0.5 %

Thermal Stability:
- Loss in wt. 0 %
- Change in Configuration None

Vacuum Stability: 0.01 ml/gas/40hr

Weight Loss: 0.301%

REFERENCE/NOTES:

SENSITIVITY:

Card Gap: No Detonation

Detonation: No Detonation

Electrical Spark: 0.120 Joules

Electrostatic:
- Minimum Concentration 0.007 oz/ft^3
- Minimum Energy 50 Joules

Friction:
- Steel Shoe No Reaction
- Fiber Shoe No Reaction
- Other

Ignition & Unconfined Burning:

	EXPLODED		BURN TIME	
Single Cube	Y	N X	33	Sec
Multiple Cube	Y	N X	36	Sec

Impact Sensitivity:
- BoM cm
- PA in
- BoE 15 in

OUTPUT:

Burn Time:
- Density 0.8 g/cm^3 6.5 sec/cm
- Density g/cm^3 sec/cm
- Density g/cm^3 sec/cm

Critical Diameter: > 0.83 meter

Critical Height: > 127 cm

Pressure Time: psi/g

Time to Peak msec

High Explosive Equivalency:
- PA Method 3 %
- Free Air Pipe Bomb %
- Closed Chamber %

USE: Grenade XM64

APPLICATION: Day Signal

STORAGE:

	NATO	DoD
Hazards Class (Q/D)	1.3	2
Compatibility		

NOMENCLATURE Green Smoke

COMPOSITION:

Ingredients	Parts by wt.
Dye Yellow	4.7
Benzanthrone	9.4
Dye Solvent Green	32.9
Potassium Chlorate	32
Lactose	18
Magnesium Carbonate	3

DRAWING NUMBER: B143-2-5

PARAMETRIC:

Auto Ignition Temperature: 170 °C

Decomposition Temperature: 195 °C

Density:
- Bulk 0.8 g/cm^3
- Loading 1.3-1.6 g/cm^3

Fuel Oxidizer Ratio: 0.56:1

Gas Volume: 14.2 ml/g

Heat of Combustion: 2960 cal/g

Heat of Reaction: 1150 cal/g

STABILITY:

Hygroscopicity:
- 95 1.5 %
- 50 0.4 %

Thermal Stability:
- Loss in wt. 0 %
- Change in Configuration None

Vacuum Stability: 0.01 ml/gas/40hr

Weight Loss: 0.214%

REFERENCE/NOTES:

SENSITIVITY:

Card Gap: No Detonation

Detonation: No Detonation

Electrical Spark: 0.120 Joules

Electrostatic:
- Minimum Concentration 0.007 oz/ft^3
- Minimum Energy 50 Joules

Friction:
- Steel Shoe No Reaction
- Fiber Shoe No Reaction
- Other

Ignition & Unconfined Burning:

	EXPLODED			BURN TIME
Single Cube	Y	N	X	33 Sec
Multiple Cube	Y	N	X	36 Sec

Impact Sensitivity:
- BoM cm
- PA in
- BoE in

OUTPUT:

Burn Time:
- Density 0.8 g/cm^3 6.5 sec/cm
- Density g/cm^3 sec/cm
- Density g/cm^3 sec/cm

Critical Diameter: > 0.83 meter

Critical Height: > 127 cm

Pressure Time: psi/g

Time to Peak msec

High Explosive Equivalency:
- PA Method 3 %
- Free Air Pipe Bomb %
- Closed Chamber %

USE: Canister, 105MM M2

APPLICATION: Day Signal

STORAGE:

	NATO	DoD
Hazards Class (Q/D)	1.3	2
Compatibility		

NOMENCLATURE Red Smoke III (1)

COMPOSITION:

Ingredients	Parts by wt.
Dye Red	40
Sodium Bicarbonate	25
Potassium Chlorate	26
Sulfur	9

DRAWING NUMBER: B143-3-1

PARAMETRIC:

Auto Ignition Temperature: 170 °C

Decomposition Temperature: 197 °C

Density:
- Bulk 0.85 g/cm^3
- Loading 1.46 g/cm^3

Fuel Oxidizer Ratio: 0.35:1

Gas Volume: 26.3 ml/g

Heat of Combustion: 2280 cal/g

Heat of Reaction: 1146 cal/g

STABILITY:

Hygroscopicity:
- 95 3.5 %
- 50 0.8 %

Thermal Stability:
- Loss in wt. 0 %
- Change in Configuration None

Vacuum Stability: 0.01 ml/gas/40hr

Weight Loss: 0.85 %

REFERENCE/NOTES:

King & Koger
McIntyre

SENSITIVITY:

Card Gap: No Detonation

Detonation: No Detonation, Burning

Electrical Spark: 0.12 Joules

Electrostatic:
- Minimum Concentration 0.036 oz/ft^3
- Minimum Energy 50K Joules

Friction:
- Steel Shoe No Reaction
- Fiber Shoe No Reaction
- Other

Ignition & Unconfined Burning:

	EXPLODED		BURN TIME	
Single Cube	Y	N X	40	Sec
Multiple Cube	Y	N X	65	Sec

Impact Sensitivity:
- BoM cm
- PA in
- BoE 15 in

OUTPUT:

Burn Time:
- Density 0.85 g/cm^3 7.9 sec/cm
- Density g/cm^3 sec/cm
- Density 1.46 g/cm^3 22.4 sec/cm

Critical Diameter: >1.35 meter

Critical Height: >130 cm

Pressure Time:
- 200 psi/g
- Time to Peak 800 msec

High Explosive Equivalency:
- PA Method %
- Free Air Pipe Bomb 7±2 %
- Closed Chamber %

USE:

Grenade, Hand, Smoke M18
Signal Aircraft XM177

APPLICATION: Signaling (Daylight)

STORAGE:

	NATO	DoD
Hazards Class (Q/D)	1.3	2
Compatibility		

NOMENCLATURE Red Smoke (2)

COMPOSITION:

Ingredients	Parts by wt.
Dye Red	47.5
Potassium Chlorate	29.5
Lactose	18
Magnesium Carbonate	5

DRAWING NUMBER: B143-3-7

PARAMETRIC:

Auto Ignition Temperature: 170 °C

Decomposition Temperature: 197 °C

Density:
- Bulk: 0.86 g/cm^3
- Loading: 1.36-1.59 g/cm^3

Fuel Oxidizer Ratio: 0.61:1

Gas Volume: 14.5 ml/g

Heat of Combustion: 2990 cal/g

Heat of Reaction: 1475 cal/g

STABILITY:

Hygroscopicity:
- 95: 4.8 %
- 50: 0.5 %

Thermal Stability:
- Loss in wt.: 0 %
- Change in Configuration: None

Vacuum Stability: 0.01 ml/gas/40hr

Weight Loss: 0.75%

REFERENCE/NOTES:

King & Koger
McIntyre

SENSITIVITY:

Card Gap: No Detonation

Detonation: No Detonation, Burning

Electrical Spark: 0.24 Joules

Electrostatic:
- Minimum Concentration: 0.036 oz/ft^3
- Minimum Energy: 50 Joules

Friction:
- Steel Shoe: No Reaction
- Fiber Shoe: No Reaction
- Other:

Ignition & Unconfined Burning:

	EXPLODED		BURN TIME	
Single Cube	Y	NX	16	Sec
Multiple Cube	Y	NX	28	Sec

Impact Sensitivity:
- BoM: cm
- PA: in
- BoE: 15 in

OUTPUT:

Burn Time:
- Density 0.86 g/cm^3: 3.2 sec/cm
- Density g/cm^3: sec/cm
- Density g/cm^3: sec/cm

Critical Diameter: >1.35 meter

Critical Height: >130 cm

Pressure Time:
- 335 psi/g
- Time to Peak: 500 msec

High Explosive Equivalency:
- PA Method: %
- Free Air Pipe Bomb: 6±1.5 %
- Closed Chamber: %

USE: Canister, Smoke 155MM, M3
Canister, Smoke 155MM, M4

APPLICATION: Daylight Signaling

STORAGE:

	NATO	DoD
Hazards Class (Q/D)	1.3	2
Compatibility		

NOMENCLATURE Red Smoke (3)

COMPOSITION:

Ingredients	Parts by wt.
Dye Red	40.2
Potassium Chlorate	31.3
Sodium Bicarbonate	14.3
Sulfur	12.3
Dextrin	1.9

DRAWING NUMBER: B143-3-7

PARAMETRIC:

Auto Ignition Temperature: 130 °C

Decomposition Temperature: 150 °C

Density:
- Bulk: 0.56 g/cm^3
- Loading: 1.26-1.59 g/cm^3

Fuel Oxidizer Ratio: 0.56 :1

Gas Volume: 25 ml/g

Heat of Combustion: 2840 cal/g

Heat of Reaction: 1321 cal/g

STABILITY:

Hygroscopicity:
- 95: 2.5%
- 50: 0.9%

Thermal Stability:
- Loss in wt.: 0%
- Change in Configuration: None

Vacuum Stability: 0.01 ml/gas/40hr

Weight Loss: 0.93%

REFERENCE/NOTES:

McIntyre

SENSITIVITY:

Card Gap: No Detonation

Detonation: No Detonation, Burning

Electrical Spark: >8 Joules

Electrostatic:
- Minimum Concentration: >0.719 oz/ft^3
- Minimum Energy: ≥50k Joules

Friction:
- Steel Shoe: No Reaction
- Fiber Shoe: N/A
- Other: N/A

Ignition & Unconfined Burning:

	EXPLODED			BURN TIME	
Single Cube	Y	N	X	23	Sec
Multiple Cube	Y	N	X	33	Sec

Impact Sensitivity:
- BoM: cm
- PA: in
- BoE: 10 in

OUTPUT:

Burn Time:
- Density 0.56 g/cm^3: 5.43 sec/cm
- Density g/cm^3: sec/cm
- Density g/cm^3: sec/cm

Critical Diameter: >1.37 meter

Critical Height: >130 cm

Pressure Time: 320 psi/g

Time to Peak: 840 msec

High Explosive Equivalency:
- PA Method: %
- Free Air Pipe Bomb: 7 %
- Closed Chamber: %

USE: 40 mm Signal

APPLICATION: Signal Daylight

STORAGE:

	NATO	DoD
Hazards Class (Q/D)	1.3	2
Compatibility		

NOMENCLATURE Red Smoke (4)

COMPOSITION:

Ingredients	Parts by wt.
Potassium Chlorate	31
VAAR	2
Sugar	20
Dye Red	47

DRAWING NUMBER: PA-SR251

PARAMETRIC:

Auto Ignition Temperature: 136 °C

Decomposition Temperature: 157 °C

Density:
Bulk g/cm^3
Loading g/cm^3

Fuel Oxidizer Ratio: 0.65 :1

Gas Volume: ml/g

Heat of Combustion: 4432 cal/g

Heat of Reaction: 413 cal/g

STABILITY:

Hygroscopicity:
95 6.0 %
50 0.11 %

Thermal Stability:
Loss in wt. 0 %
Change in Configuration None

Vacuum Stability: 0.16 ml/gas/40hr

Weight Loss: 0.9 %

REFERENCE/NOTES:

TM 9-1370-203-12

Weingarten

SENSITIVITY:

Card Gap: No Detonation

Detonation: No Detonation, Burning

Electrical Spark: >11.02 Joules

Electrostatic:
Minimum Concentration oz/ft^3
Minimum Energy Joules

Friction:
Steel Shoe No Reaction
Fiber Shoe No Reaction
Other

Ignition & Unconfined Burning:

	EXPLODED			BURN TIME	
Single Cube	Y	N	X	2	Sec
Multiple Cube	Y	N	X	18	Sec

Impact Sensitivity:

BoM		cm
PA	18	in
BoE	15	in

OUTPUT:

Burn Time:
Density g/cm^3 0.4 sec/cm
Density g/cm^3 sec/cm
Density g/cm^3 sec/cm

Critical Diameter: meter

Critical Height: cm

Pressure Time: 527 psi/g
Time to Peak 1025 msec

High Explosive Equivalency:
PA Method %
Free Air Pipe Bomb 8 %
Closed Chamber %

USE: M62, Smoke, Ground, Red

APPLICATION: Daylight Signal Launched by Rifle Grenade Launcher

STORAGE:

	NATO	DoD
Hazards Class (Q/D)	1.3	2
Compatibility		

NOMENCLATURE Red Smoke (5)

COMPOSITION:

Ingredients	Parts by wt.
Potassium Chlorate	35
Sodium Bicarbonate	1
Asbestos Powder	1.5
Sugar	26.5
Dye Red	36

DRAWING NUMBER: 8797998

PARAMETRIC:

Auto Ignition Temperature: 147 °C

Decomposition Temperature: 170 °C

Density:
- Bulk g/cm^3
- Loading 1.3-1.5 g/cm^3

Fuel Oxidizer Ratio: 0.76 :1

Gas Volume: 3742 ml/g

Heat of Combustion: 461 cal/g

Heat of Reaction: cal/g

STABILITY:

Hygroscopicity:
- 95 13.1 %
- 50 0.7 %

Thermal Stability:
- Loss in wt. 0 %
- Change in Configuration None

Vacuum Stability: ml/gas/40hr

Weight Loss: 0.9 %

REFERENCE/NOTES:

TM9-1370-203-12

Weingarten

SENSITIVITY:

Card Gap: No Detonation

Detonation: No Detonation, Burning

Electrical Spark: >11.02 Joules

Electrostatic:
- Minimum Concentration oz/ft^3
- Minimum Energy Joules

Friction:
- Steel Shoe No Reaction
- Fiber Shoe No Reaction
- Other

Ignition & Unconfined Burning:

	EXPLODED			BURN TIME	
Single Cube	Y	N	X	5	Sec
Multiple Cube	Y	N	X	5	Sec

Impact Sensitivity:
- BoM cm
- PA 15 in
- BoE in

OUTPUT:

Burn Time:
- Density g/cm^3 0.98 sec/cm
- Density g/cm^3 sec/cm
- Density g/cm^3 sec/cm

Critical Diameter: meter

Critical Height: cm

Pressure Time: 673 psi/g

- Time to Peak 613 msec

High Explosive Equivalency:
- PA Method %
- Free Air Pipe Bomb 9 %
- Closed Chamber %

USE: M129A1

APPLICATION: Day Signal Handheld

STORAGE:

	NATO	DoD
Hazards Class (Q/D)	1.3	2
Compatibility		

NOMENCLATURE Red Smoke VI (6)

COMPOSITION:

Ingredients	Parts by wt.
Potassium Chlorate	27.4
Sulfur	10.6
Sodium Bicarbonate	22.0
Dye Red	40.0

DRAWING NUMBER: MS 589

PARAMETRIC:

Auto Ignition Temperature: 144 °C

Decomposition Temperature: 166 °C

Density:
Bulk 0.82 g/cm^3
Loading 1.3-1.5 g/cm^3

Fuel Oxidizer Ratio: 0.39 :1

Gas Volume: 25 ml/g

Heat of Combustion: 2473 cal/g

Heat of Reaction: 1091 cal/g

STABILITY:

Hygroscopicity:
95 %
50 0.8 %

Thermal Stability:
Loss in wt. 0 %
Change in Configuration None

Vacuum Stability: 0.14 ml/gas/40hr

Weight Loss: 0.8 %

REFERENCE/NOTES:

Pollard and Arnold

SENSITIVITY:

Card Gap: No Detonation

Detonation: No Detonation

Electrical Spark: 0.2 Joules

Electrostatic:
Minimum Concentration 0.072 oz/ft^3
Minimum Energy >50 Joules

Friction:
Steel Shoe No Reaction
Fiber Shoe No Reaction
Other

Ignition & Unconfined Burning:

	EXPLODED			BURN TIME	
Single Cube	Y	N	X	35	Sec
Multiple Cube	Y	N	X	65	Sec

Impact Sensitivity:

BoM		cm
PA		in
BoE	15	in

OUTPUT:

Burn Time:

Density	0.82	g/cm^3	6.89	sec/cm
Density		g/cm^3		sec/cm
Density		g/cm^3		sec/cm

Critical Diameter: >1.37 meter

Critical Height: >130 cm

Pressure Time:
psi/g
Time to Peak msec

High Explosive Equivalency:
PA Method %
Free Air Pipe Bomb 6 %
Closed Chamber %

USE: Obsolete

APPLICATION: Signaling

STORAGE:

	NATO	DoD
Hazards Class (Q/D)	1.3	3
Compatibility		

NOMENCLATURE Red Smoke VII (7)

COMPOSITION:

Ingredients	Parts by wt.
Red Dye*	54
Potassium Chlorate	23
Sugar	23

*9-Diethylaminorosindone

DRAWING NUMBER: MS593

PARAMETRIC:

Auto Ignition Temperature: 138 °C

Decomposition Temperature: 160 °C

Density:
- Bulk 0.8 g/cm^3
- Loading 1.3-1.5 g/cm^3

Fuel Oxidizer Ratio: 1 :1

Gas Volume: 30 ml/g

Heat of Combustion: 3150 cal/g

Heat of Reaction: 946 cal/g

STABILITY:

Hygroscopicity:
- 95 11 %
- 50 0.5 %

Thermal Stability:
- Loss in wt. 0 %
- Change in Configuration None

Vacuum Stability: 0.11 ml/gas/40hr

Weight Loss: 0.8 %

REFERENCE/NOTES:

Pollard and Arnold

SENSITIVITY:

Card Gap: No Detonation

Detonation: No Detonation

Electrical Spark: 0.35 Joules

Electrostatic:
- Minimum Concentration 0.072 oz/ft^3
- Minimum Energy 50 Joules

Friction:
- Steel Shoe No Reaction
- Fiber Shoe No Reaction
- Other

Ignition & Unconfined Burning:

	EXPLODED			BURN TIME	
Single Cube	Y	N	X	7	Sec
Multiple Cube	Y	N	X	12	Sec

Impact Sensitivity:
- BoM cm
- PA in
- BoE 10 in

OUTPUT:

Burn Time:
- Density 0.8 g/cm^3 1.38 sec/cm
- Density g/cm^3 sec/cm
- Density g/cm^3 sec/cm

Critical Diameter: >1.37 meter

Critical Height: >130 cm

Pressure Time: psi/g

Time to Peak msec

High Explosive Equivalency:
- PA Method %
- Free Air Pipe Bomb 9 %
- Closed Chamber %

USE: Obsolete

APPLICATION: Day Signal

STORAGE:

	NATO	DoD
Hazards Class (Q/D)	1.3	3
Compatibility		

COMPOSITION:

Ingredients	Parts by wt.
Red Dye*	40
Potassium Chlorate	24
Sodium Bicarbonate	17
Sulfur	5
Polyester Resin	14

*Dye-Mil-D-3718

DRAWING NUMBER:

PARAMETRIC:

Auto Ignition Temperature: 134 °C

Decomposition Temperature: 155 °C

Density:
- Bulk 0.85 g/cm^3
- Loading 1.3-1.5 g/cm^3

Fuel Oxidizer Ratio: 0.21 :1

Gas Volume: 18 ml/g

Heat of Combustion: 2115 cal/g

Heat of Reaction: 973 cal/g

STABILITY:

Hygroscopicity:
- 95 4.8 %
- 50 0.5 %

Thermal Stability:
- Loss in wt. 0 %
- Change in Configuration None

Vacuum Stability: 0.09 ml/gas/40hr

Weight Loss: 0.95%

REFERENCE/NOTES:

AMCP706-188

SENSITIVITY:

Card Gap: No Detonation

Detonation: No Detonation

Electrical Spark: 0.27 Joules

Electrostatic:
- Minimum Concentration 0.036 oz/ft^3
- Minimum Energy 50 Joules

Friction:
- Steel Shoe No Reaction
- Fiber Shoe No Reaction
- Other

Ignition & Unconfined Burning:

	EXPLODED		BURN TIME	
Single Cube	Y	N X	28	Sec
Multiple Cube	Y	N X	46	Sec

Impact Sensitivity:
- BoM cm
- PA in
- BoE 15 in

OUTPUT:

Burn Time:
- Density 0.85 g/cm^3 5.51 sec/cm
- Density g/cm^3 sec/cm
- Density g/cm^3 sec/cm

Critical Diameter: >1.35 meter

Critical Height: >130 cm

Pressure Time: psi/g

Time to Peak msec

High Explosive Equivalency:
- PA Method %
- Free Air Pipe Bomb 7 %
- Closed Chamber %

USE: Navy Floating Drift Signal

APPLICATION: Signaling

STORAGE:

	NATO	DoD
Hazards Class (Q/D)	1.3	2
Compatibility		

NOMENCLATURE Red Smoke (9)

COMPOSITION:

Ingredients	Parts by wt.
Red Dye*	48
Potassium Chlorate	35
Sugar	17

*1-methyamino (AQ) 45%
1,4-di-p-toluidino AQ 3%

DRAWING NUMBER:

PARAMETRIC:

Auto Ignition Temperature: 142 °C

Decomposition Temperature: 165 °C

Density:
Bulk 0.88 g/cm^3
Loading 1.3-1.5 g/cm^3

Fuel Oxidizer Ratio: 0.48 :1

Gas Volume: 22 ml/g

Heat of Combustion: 3320 cal/g

Heat of Reaction: 763 cal/g

STABILITY:

Hygroscopicity:
95 9.6 %
50 0.6 %

Thermal Stability:
Loss in wt. 0 %
Change in Configuration

Vacuum Stability: 0.04 ml/gas/40hr

Weight Loss: 0.92 %

REFERENCE/NOTES:

AMCP706-188

SENSITIVITY:

Card Gap: No Detonation

Detonation: No Detonation

Electrical Spark: 0.3 Joules

Electrostatic:
Minimum Concentration oz/ft^3
Minimum Energy Joules

Friction:
Steel Shoe No Reaction
Fiber Shoe No Reaction
Other

Ignition & Unconfined Burning:

	EXPLODED		BURN TIME	
Single Cube	Y	·N X	9	Sec
Multiple Cube	Y	N X	15	Sec

Impact Sensitivity:

BoM		cm
PA		in
BoE	10	in

OUTPUT:

Burn Time:

Density	0.88	g/cm^3	1.77	sec/cm
Density		g/cm^3		sec/cm
Density		g/cm^3		sec/cm

Critical Diameter: >1.35 meter

Critical Height: >130 cm

Pressure Time: psi/g
Time to Peak msec

High Explosive Equivalency:
PA Method %
Free Air Pipe Bomb 8 %
Closed Chamber %

USE: Rocket, Parachute, Ground, Signal

APPLICATION: Day Signal

STORAGE:

	NATO	DoD
Hazards Class (Q/D)	1.3	2
Compatibility		

COMPOSITION:

Ingredients	Parts by wt.
Potassium Chlorate	30.2
Sulfur	11.8
Red Dye	36
Sodium Bicarbonate	18
Dextrin	4

DRAWING NUMBER:

PARAMETRIC:

Auto Ignition Temperature: 132 °C

Decomposition Temperature: 153 °C

Density:
- Bulk 0.8 g/cm^3
- Loading 1.3-1.5 g/cm^3

Fuel Oxidizer Ratio: 0.39 :1

Gas Volume: 27 ml/g

Heat of Combustion: 2210 cal/g

Heat of Reaction: 1066 cal/g

STABILITY:

Hygroscopicity:
- 95 5.1 %
- 50 0.6 %

Thermal Stability:
- Loss in wt. 0 %
- Change in Configuration None

Vacuum Stability: 0.11 ml/gas/40hr

Weight Loss: 1.04 %

REFERENCE/NOTES:

AMCP706-188

SENSITIVITY:

Card Gap: No Detonation

Detonation: No Detonation

Electrical Spark: 0.15 Joules

Electrostatic:
- Minimum Concentration oz/ft^3
- Minimum Energy Joules

Friction:
- Steel Shoe No Reaction
- Fiber Shoe No Reaction
- Other

Ignition & Unconfined Burning:

	EXPLODED		BURN TIME
Single Cube	Y	NX	31 Sec
Multiple Cube	Y	NX	52 Sec

Impact Sensitivity:
- BoM cm
- PA in
- BoE 15 in

OUTPUT:

Burn Time:
- Density 0.8 g/cm^3 6.1 sec/cm
- Density g/cm^3 sec/cm
- Density g/cm^3 sec/cm

Critical Diameter: meter

Critical Height: cm

Pressure Time: psi/g

Time to Peak msec

High Explosive Equivalency:
- PA Method %
- Free Air Pipe Bomb 8 %
- Closed Chamber %

USE:

APPLICATION: Day Signal

STORAGE:

	NATO	DoD
Hazards Class (Q/D)	1.3	2
Compatibility		

NOMENCLATURE Red Smoke (11)

COMPOSITION:

Ingredients	Parts by wt.
Dye Red	41.2
Sodium Bicarbonate	21.8
Potassium Chlorate	25.1
Sulfur	9.4
Binder*	2.5

*Nitrocellulose/acetone 8/92

DRAWING NUMBER: C143-3-9

PARAMETRIC:

Auto Ignition Temperature: 160 °C

Decomposition Temperature: 186 °C

Density:
- Bulk 0.79 g/cm^3
- Loading 1.3-1.5 g/cm^3

Fuel Oxidizer Ratio: 0.37 :1

Gas Volume: 25 ml/g

Heat of Combustion: 2300 cal/g

Heat of Reaction: 1206 cal/g

STABILITY:

Hygroscopicity:
- 95 4.3 %
- 50 0.06 %

Thermal Stability:
- Loss in wt. 0 %
- Change in Configuration None

Vacuum Stability: 0.01 ml/gas/40hr

Weight Loss: 0.96 %

REFERENCE/NOTES:

SENSITIVITY:

Card Gap: No Detonation

Detonation: No Detonation

Electrical Spark: 0.223 Joules

Electrostatic:
- Minimum Concentration oz/ft^3
- Minimum Energy Joules

Friction:
- Steel Shoe No Reaction
- Fiber Shoe No Reaction
- Other

Ignition & Unconfined Burning:

	EXPLODED		BURN TIME
Single Cube	Y	N X	29 Sec
Multiple Cube	Y	N X	46 Sec

Impact Sensitivity:
- BoM cm
- PA in
- BoE 15 in

OUTPUT:

Burn Time:
- Density 0.79 g/cm^3 5.71 sec/cm
- Density g/cm^3 sec/cm
- Density g/cm^3 sec/cm

Critical Diameter: meter

Critical Height: cm

Pressure Time: psi/g
- Time to Peak msec

High Explosive Equivalency:
- PA Method %
- Free Air Pipe Bomb 7 %
- Closed Chamber %

USE: Grenade, Hand, XM48

APPLICATION: Day Signal

STORAGE:

	NATO	DoD
Hazards Class (Q/D)	1.3	2
Compatibility		

NOMENCLATURE Red Smoke

(12)

COMPOSITION:

Ingredients	Parts by wt.
Dye Red	37.9
Sodium	16.6
Potassium Chlorate	32.1
Sulfur	12.4
Nitrocellulose/Acetone 8/92	25.0

DRAWING NUMBER: C143-3-6

PARAMETRIC:

Auto Ignition Temperature: 151 °C

Decomposition Temperature: 175 °C

Density:
- Bulk 0.82 g/cm^3
- Loading 1.3-1.5 g/cm^3

Fuel Oxidizer Ratio: 0.39 :1

Gas Volume: 28 ml/g

Heat of Combustion: 2450 cal/g

Heat of Reaction: 1301 cal/g

STABILITY:

Hygroscopicity:
- 95 6.2 %
- 50 0.11 %

Thermal Stability:
- Loss in wt. 0 %
- Change in Configuration None

Vacuum Stability: 0.07 ml/gas/40hr

Weight Loss: 1.4 %

REFERENCE/NOTES:

SENSITIVITY:

Card Gap: No Detonation

Detonation: No Detonation

Electrical Spark: 0.196 Joules

Electrostatic:
- Minimum Concentration oz/ft^3
- Minimum Energy Joules

Friction:
- Steel Shoe No Reaction
- Fiber Shoe No Reaction
- Other

Ignition & Unconfined Burning:

	EXPLODED		BURN TIME
Single Cube	Y	N X	33 Sec
Multiple Cube	Y	N X	45 Sec

Impact Sensitivity:
- BoM cm
- PA in
- BoE 15 in

OUTPUT:

Burn Time:
- Density 0.82 g/cm^3 6.5 sec/cm
- Density g/cm^3 sec/cm
- Density g/cm^3 sec/cm

Critical Diameter: meter

Critical Height: cm

Pressure Time: psi/g
- Time to Peak msec

High Explosive Equivalency:
- PA Method %
- Free Air Pipe Bomb 8 %
- Closed Chamber %

USE: Cartridge 40mm E25YM675

APPLICATION: Day Signal

STORAGE:

	NATO	DoD
Hazards Class (Q/D)	1.3	2
Compatibility		

NOMENCLATURE Red Smoke (13)

COMPOSITION:

Ingredients	Parts by wt.
Dye Red	49
Potassium Chlorate	29
Magnesium Carborate	4
Lactose	18

DRAWING NUMBER: B143-3-5

PARAMETRIC:

Auto Ignition Temperature: 164 °C

Decomposition Temperature: 190 °C

Density:
- Bulk 0.72 g/cm^3
- Loading 1.3-1.5 g/cm^3

Fuel Oxidizer Ratio: 0.62 :1

Gas Volume: 16 ml/g

Heat of Combustion: 2630 cal/g

Heat of Reaction: 1153 cal/g

STABILITY:

Hygroscopicity:
- 95 4.3 %
- 50 0.92 %

Thermal Stability:
- Loss in wt. 0 %
- Change in Configuration None

Vacuum Stability: 0.019 ml/gas/40hr

Weight Loss: 0.88 %

REFERENCE/NOTES:

SENSITIVITY:

Card Gap: No Detonation

Detonation: No Detonation

Electrical Spark: 0.25 Joules

Electrostatic:
- Minimum Concentration oz/ft^3
- Minimum Energy Joules

Friction:
- Steel Shoe No Reaction
- Fiber Shoe No Reaction
- Other

Ignition & Unconfined Burning:

	EXPLODED		BURN TIME
Single Cube	Y	N X	19 Sec
Multiple Cube	Y	N X	26 Sec

Impact Sensitivity:
- BoM cm
- PA in
- BoE 15 in

OUTPUT:

Burn Time:
- Density 0.72 g/cm^3 3.74 sec/cm
- Density g/cm^3 sec/cm
- Density g/cm^3 sec/cm

Critical Diameter: meter

Critical Height: cm

Pressure Time: psi/g

- Time to Peak msec

High Explosive Equivalency:
- PA Method %
- Free Air Pipe Bomb 6 %
- Closed Chamber %

USE: Canister 105 mm, M2

APPLICATION: Day Signal

STORAGE:

	NATO	DoD
Hazards Class (Q/D)	1.3	2
Compatibility		

NOMENCLATURE Red Smoke VIII (14)

COMPOSITION:

Ingredients	Parts by wt.
Red Dye	50
Potassium Chlorate	27
Magnesium Carbonate	5
Lactose	18

DRAWING NUMBER: B143-3-4

PARAMETRIC:

Auto Ignition Temperature: 164 °C

Decomposition Temperature: 190 °C

Density:
- Bulk 0.72 g/cm^3
- Loading 1.3-1.5 g/cm^3

Fuel Oxidizer Ratio: 0.67 :1

Gas Volume: 16 ml/g

Heat of Combustion: 2590 cal/g

Heat of Reaction: cal/g

STABILITY:

Hygroscopicity:
- 95 4.1 %
- 50 0.9 %

Thermal Stability:
- Loss in wt. 0 %
- Change in Configuration None

Vacuum Stability: 0.02 ml/gas/40hr

Weight Loss: 0.91%

REFERENCE/NOTES:

SENSITIVITY:

Card Gap: No Detonation

Detonation: No Detonation

Electrical Spark: 0.25 Joules

Electrostatic:
- Minimum Concentration oz/ft^3
- Minimum Energy Joules

Friction:
- Steel Shoe No Reaction
- Fiber Shoe No Reaction
- Other

Ignition & Unconfined Burning:

	EXPLODED		BURN TIME
Single Cube	Y	N X	21 Sec
Multiple Cube	Y	N X	30 Sec

Impact Sensitivity:
- BoM cm
- PA in
- BoE 15 in

OUTPUT:

Burn Time:
- Density 0.72 g/cm^3 4.13 sec/cm
- Density g/cm^3 sec/cm
- Density g/cm^3 sec/cm

Critical Diameter: meter

Critical Height: cm

Pressure Time: psi/g

Time to Peak msec

High Explosive Equivalency:
- PA Method %
- Free Air Pipe Bomb 6 %
- Closed Chamber %

USE: Canister, 105mm, M2

APPLICATION: Day Signal

STORAGE:

	NATO	DoD
Hazards Class (Q/D)	1.3	2
Compatibility		

NOMENCLATURE Yellow Smoke VI

(1)

COMPOSITION:

Ingredients	Parts by wt.
Dye Yellow	14
Benzanthrone	24.5
Sulfur	8.5
Potassium Chlorate	20
Sodium Bicarbonate	33

DRAWING NUMBER: B143-4-1

PARAMETRIC:

Auto Ignition Temperature: 170 °C

Decomposition Temperature: 196 °C

Density:
- Bulk 0.85 g/cm^3
- Loading 1.33 g/cm^3

Fuel Oxidizer Ratio: 0.43:1

Gas Volume: 35 ml/g

Heat of Combustion: 2280 cal/g

Heat of Reaction: 1019 cal/g

STABILITY:

Hygroscopicity:
- 95 1.6 %
- 50 0.8 %

Thermal Stability:
- Loss in wt. 0 %
- Change in Configuration None

Vacuum Stability: 0.006 ml/gas/40hr

Weight Loss: 0.75%

REFERENCE/NOTES:

King and Koger
Webster

SENSITIVITY:

Card Gap: No Detonation

Detonation: No Detonation, Burning

Electrical Spark: 0.11 Joules

Electrostatic:
- Minimum Concentration 0.036 oz/ft^3
- Minimum Energy 50k Joules

Friction:
- Steel Shoe No Reaction
- Fiber Shoe No Reaction
- Other

Ignition & Unconfined Burning:

	EXPLODED		BURN TIME
Single Cube	Y	NX	35 Sec
Multiple Cube	Y	NX	56 Sec

Impact Sensitivity:
- BoM cm
- PA in
- BoE 15 in

OUTPUT:

Burn Time:

Density	0.85 g/cm^3	7 sec/cm
Density	0.94 g/cm^3	10 sec/cm
Density	1.33 g/cm^3	24.6 sec/cm

Critical Diameter: >1.37 meter

Critical Height: 130 cm

Pressure Time: 130 psi/g

- Time to Peak 800 msec

High Explosive Equivalency:
- PA Method %
- Free Air Pipe Bomb 5 %
- Closed Chamber %

USE: Grenade, Hand, Smoke M18
Signal, Smoke, Aircraft XM177

APPLICATION: Signal Daylight

STORAGE:

	NATO	DoD
Hazards Class (Q/D)	1.3	2
Compatibility		

NOMENCLATURE Yellow Smoke

COMPOSITION:

Ingredients	Parts by wt.
Potassium Chlorate	25
Lactose	16
Magnesium Carbonate	9
Dye Yellow	18
Berzanthrone	32

DRAWING NUMBER: B143-4-7

PARAMETRIC:

Auto Ignition Temperature: 197 °C

Decomposition Temperature: 227 °C

Density:
- Bulk: 0.61 g/cm^3
- Loading: 1.22-1.6 g/cm^3

Fuel Oxidizer Ratio: 0.6=:1

Gas Volume: 22.8 ml/g

Heat of Combustion: 2760 cal/g

Heat of Reaction: cal/g

STABILITY:

Hygroscopicity:
- 95: 3.5 %
- 50: 0.05 %

Thermal Stability:
- Loss in wt.: 0 %
- Change in Configuration: None

Vacuum Stability: 0.01 ml/gas/40hr

Weight Loss: 0.15 %

REFERENCE/NOTES:

King and Koger

SENSITIVITY:

Card Gap: No Detonation

Detonation: No Detonation, Burning

Electrical Spark: 0.1 Joules

Electrostatic:
- Minimum Concentration: 0.009 oz/ft^3
- Minimum Energy: Joules

Friction:
- Steel Shoe: No Reaction
- Fiber Shoe: No Reaction
- Other

Ignition & Unconfined Burning:

	EXPLODED		BURN TIME	
Single Cube	Y	NX	25	Sec
Multiple Cube	Y	NX	30	Sec

Impact Sensitivity:
- BoM: cm
- PA: in
- BoE: 10 in

OUTPUT:

Burn Time:
- Density 0.61 g/cm^3 4.92 sec/cm
- Density g/cm^3 sec/cm
- Density g/cm^3 sec/cm

Critical Diameter: 1.37 meter

Critical Height: 130 cm

Pressure Time: 227 psi/g

Time to Peak 1500 msec

High Explosive Equivalency:
- PA Method %
- Free Air Pipe Bomb 7 %
- Closed Chamber %

USE: Canister, 155 mm, M3

APPLICATION: Daylight Signal

STORAGE:

	NATO	DoD
Hazards Class (Q/D)	1.3	2
Compatibility		

NOMENCLATURE Yellow Smoke (3)

COMPOSITION:

Ingredients	Parts by wt.
Potassium Chlorate	26
Sugar	15
Sodium Bicarbonate	3
Sil-o-cel* (Binder)	4
Indarthrone Golden Yellow	34
Benzanthrone	18

*Trade Name John-Manville Corp.

DRAWING NUMBER:

PARAMETRIC:

Auto Ignition Temperature: 170 °C

Decomposition Temperature: 173 °C

Density:
- Bulk g/cm^3
- Loading 1.3-1.6 g/cm^3

Fuel Oxidizer Ratio: 0.58 :1

Gas Volume: ml/g

Heat of Combustion: cal/g

Heat of Reaction: cal/g

STABILITY:

Hygroscopicity:
- 95 %
- 50 %

Thermal Stability:
- Loss in wt. 0 %
- Change in Configuration None

Vacuum Stability: 0.01 ml/gas/40hr

Weight Loss: %

REFERENCE/NOTES:

Webster

SENSITIVITY:

Card Gap:

Detonation:

Electrical Spark: Joules

Electrostatic:
- Minimum Concentration oz/ft^3
- Minimum Energy Joules

Friction:
- Steel Shoe No Reaction
- Fiber Shoe No Reaction
- Other

Ignition & Unconfined Burning:

	EXPLODED		BURN TIME	
Single Cube	Y	N X	17	Sec
Multiple Cube	Y	N X	26	Sec

Impact Sensitivity:
- BoM cm
- PA in
- BoE 15 in

OUTPUT:

Burn Time:

Density	g/cm^3	sec/cm
Density	g/cm^3	sec/cm
Density	g/cm^3	sec/cm

Critical Diameter: meter

Critical Height: cm

Pressure Time: psi/g
- Time to Peak msec

High Explosive Equivalency:
- PA Method %
- Free Air Pipe Bomb %
- Closed Chamber %

USE: MK118 Smoke Signal

APPLICATION: Day Signal

STORAGE:

	NATO	DoD
Hazards Class (Q/D)	1.3	2
Compatibility		

NOMENCLATURE Yellow Smoke (4)

COMPOSITION:

Ingredients	Parts by wt.
Potassium Chlorate	30
VAAR	2
Sugar	17
Vat Yellow 4 Dye	51

DRAWING NUMBER: (PA-SY321)

PARAMETRIC:

Auto Ignition Temperature: 125 °C

Decomposition Temperature: 144 °C

Density:
- Bulk g/cm^3
- Loading 1.3-1.6 g/cm^3

Fuel Oxidizer Ratio: 0.57 :1

Gas Volume: ml/g

Heat of Combustion: 4807 cal/g

Heat of Reaction: 392 cal/g

STABILITY:

Hygroscopicity:
- 95 11.5 %
- 50 0.71 %

Thermal Stability:
- Loss in wt. 0.69 %
- Change in Configuration None

Vacuum Stability: (Burrea in 16 hr 11) ml/gas/40hr

Weight Loss: 0.71 %

REFERENCE/NOTES:

Weingarten

SENSITIVITY:

Card Gap: No Detonation

Detonation: 1 of 5 Samples Burned

Electrical Spark: >11.02 Joules

Electrostatic:
- Minimum Concentration oz/ft^3
- Minimum Energy Joules

Friction:
- Steel Shoe No Reaction
- Fiber Shoe No Reaction
- Other

Ignition & Unconfined Burning:

	EXPLODED		BURN TIME	
Single Cube	Y	N X	10	Sec
Multiple Cube	Y	N X	10	Sec

Impact Sensitivity:
- BoM cm
- PA 16 in
- BoE in

OUTPUT:

Burn Time:
- Density g/cm^3 1.97 sec/cm
- Density g/cm^3 sec/cm
- Density g/cm^3 sec/cm

Critical Diameter: meter

Critical Height: cm

Pressure Time: 506 psi/g
- Time to Peak 1900 msec

High Explosive Equivalency:
- PA Method %
- Free Air Pipe Bomb %
- Closed Chamber %

USE: M169
M64

APPLICATION: Signal

STORAGE:

	NATO	DoD
Hazards Class (Q/D)	1.3	2
Compatibility		

NOMENCLATURE Yellow Smoke IX (5)

COMPOSITION:

Ingredients	Parts by wt.
Potassium Chlorate	23
Sulfur	9
Sodium Bicarbonate	27
Dye Yellow	41

DRAWING NUMBER: MS591

PARAMETRIC:

Auto Ignition Temperature: 160 °C

Decomposition Temperature: 184 °C

Density:
- Bulk: 0.78 g/cm^3
- Loading: 1.3-1.6 g/cm^3

Fuel Oxidizer Ratio: 0.39 :1

Gas Volume: 28 ml/g

Heat of Combustion: 2110 cal/g

Heat of Reaction: 863 cal/g

STABILITY:

Hygroscopicity:
- 95: 3.62 %
- 50: 0.83 %

Thermal Stability:
- Loss in wt.: 0 %
- Change in Configuration: None

Vacuum Stability: 0.08 ml/gas/40hr

Weight Loss: 1.13 %

REFERENCE/NOTES:

Pollard and Arnold

SENSITIVITY:

Card Gap: No Detonation

Detonation: No Detonation

Electrical Spark: 0.153 Joules

Electrostatic:
- Minimum Concentration: 0.356 oz/ft^3
- Minimum Energy: 50 Joules

Friction:
- Steel Shoe: No Reaction
- Fiber Shoe: No Reaction
- Other

Ignition & Unconfined Burning:

	EXPLODED		BURN TIME	
Single Cube	Y	NX	32	Sec
Multiple Cube	Y	NX	59	Sec

Impact Sensitivity:

BoM		cm
PA		in
BoE	15	in

OUTPUT:

Burn Time:

Density	0.78 g/cm^3	6.3 sec/cm
Density	g/cm^3	sec/cm
Density	g/cm^3	sec/cm

Critical Diameter: meter

Critical Height: cm

Pressure Time: psi/g

Time to Peak: msec

High Explosive Equivalency:
- PA Method: %
- Free Air Pipe Bomb: 5 %
- Closed Chamber: %

USE: Obsolete

APPLICATION: Day Signal

STORAGE:

	NATO	DoD
Hazards Class (Q/D)	1.3	2
Compatibility		

NOMENCLATURE Yellow Smoke (6)

COMPOSITION:

Ingredients	Parts by wt.
Benzanthrone	32
Indanthrene	15
Potassium Chlorate	30
Sugar	20
Sodium Bicarbonate	3

DRAWING NUMBER:

PARAMETRIC:

Auto Ignition Temperature: 191 °C

Decomposition Temperature: 221 °C

Density:
Bulk 0.75 g/cm^3
Loading 1.3-1.6 g/cm^3

Fuel Oxidizer Ratio: 0.67:1

Gas Volume: 14 ml/g

Heat of Combustion: 2490 cal/g

Heat of Reaction: 683 cal/g

STABILITY:

Hygroscopicity:
95 11.3 %
50 0.9 %

Thermal Stability:
Loss in wt. 0 %
Change in Configuration None

Vacuum Stability: 0.01 ml/gas/40hr

Weight Loss: 1.03%

REFERENCE/NOTES:

AMCP 706-188

SENSITIVITY:

Card Gap: No Detonation

Detonation: No Detonation

Electrical Spark: 0.275 Joules

Electrostatic:
Minimum Concentration 0.719 oz/ft^3
Minimum Energy 50 Joules

Friction:
Steel Shoe No Reaction
Fiber Shoe No Reaction
Other

Ignition & Unconfined Burning:

	EXPLODED		BURN TIME	
Single Cube	Y	NX	14	Sec
Multiple Cube	Y	NX	19	Sec

Impact Sensitivity:

BoM		cm
PA		in
BoE	15	in

OUTPUT:

Burn Time:

Density	0.75 g/cm^3	2.76 sec/cm
Density	g/cm^3	sec/cm
Density	g/cm^3	sec/cm

Critical Diameter: meter

Critical Height: cm

Pressure Time: psi/g

Time to Peak msec

High Explosive Equivalency:

PA Method	%
Free Air Pipe Bomb	5 %
Closed Chamber	%

USE: Rocket Parachute Ground Signal

APPLICATION: Day Signal

STORAGE:

	NATO	DoD
Hazards Class (Q/D)	1.3	2
Compatibility		

NOMENCLATURE Yellow Smoke (7)

COMPOSITION:

Ingredients	Parts by wt.
Dye Yellow	17
Benzanthrone	31
Potassium Chlorate	27
Lactose	14
Magnesium Carbonate	11

DRAWING NUMBER: B143-4-6

PARAMETRIC:

Auto Ignition Temperature: 174 °C

Decomposition Temperature: 201 °C

Density:
- Bulk 0.71 g/cm^3
- Loading 1.3-1.5 g/cm^3

Fuel Oxidizer Ratio: 0.52:1

Gas Volume: 25 ml/g

Heat of Combustion: 2635 cal/g

Heat of Reaction: 867 cal/g

STABILITY:

Hygroscopicity:
- 95 1.36 %
- 50 0.9 %

Thermal Stability:
- Loss in wt. %
- Change in Configuration

Vacuum Stability: 0.01 ml/gas/40hr

Weight Loss: 0.057 %

REFERENCE/NOTES:

SENSITIVITY:

Card Gap: No Detonation

Detonation: No Detonation

Electrical Spark: 0.3 Joules

Electrostatic:
- Minimum Concentration 0.009 oz/ft^3
- Minimum Energy Joules

Friction:
- Steel Shoe No Reaction
- Fiber Shoe No Reaction
- Other

Ignition & Unconfined Burning:

	EXPLODED		BURN TIME	
Single Cube	Y	NX	26	Sec
Multiple Cube	Y	NX	33	Sec

Impact Sensitivity:
- BoM cm
- PA in
- BoE 10 in

OUTPUT:

Burn Time:
- Density 0.71 g/cm^3 5.12 sec/cm
- Density g/cm^3 sec/cm
- Density g/cm^3 sec/cm

Critical Diameter: meter

Critical Height: cm

Pressure Time: psi/g
- Time to Peak msec

High Explosive Equivalency:
- PA Method %
- Free Air Pipe Bomb 7 %
- Closed Chamber %

USE: Canister, 105 mm, M2

APPLICATION: Day Signal

STORAGE:

	NATO	DoD
Hazards Class (Q/D)	1.3	2
Compatibility		

NOMENCLATURE Yellow Smoke (8)

COMPOSITION:

Ingredients	Parts by wt.
Dye Yellow	46
Benzanthrone	12.5
Potassium Chlorate	31
Lactose	10.5
Acetone	25

DRAWING NUMBER: B143-4-8

PARAMETRIC:

Auto Ignition Temperature: 169 °C

Decomposition Temperature: 195 °C

Density:
- Bulk 0.77 g/cm^3
- Loading g/cm^3

Fuel Oxidizer Ratio: 0.34:1

Gas Volume: 21 ml/g

Heat of Combustion: 2475 cal/g

Heat of Reaction: 902 cal/g

STABILITY:

Hygroscopicity:
- 95 4.6 %
- 50 0.7 %

Thermal Stability:
- Loss in wt. 0 %
- Change in Configuration None

Vacuum Stability: 0.009 ml/gas/40hr

Weight Loss: 0.86 %

REFERENCE/NOTES:

SENSITIVITY:

Card Gap: No Detonation

Detonation: No Detonation

Electrical Spark: 0.275 Joules

Electrostatic:
- Minimum Concentration 0.025 oz/ft^3
- Minimum Energy Joules

Friction:
- Steel Shoe
- Fiber Shoe
- Other

Ignition & Unconfined Burning:

	EXPLODED		BURN TIME	
Single Cube	Y	NX	30	Sec
Multiple Cube	Y	NX	43	Sec

Impact Sensitivity:
- BoM cm
- PA in
- BoE 10 in

OUTPUT:

Burn Time:
- Density 0.77 g/cm^3 5.9 sec/cm
- Density g/cm^3 sec/cm
- Density g/cm^3 sec/cm

Critical Diameter: meter

Critical Height: cm

Pressure Time: psi/g
- Time to Peak msec

High Explosive Equivalency:
- PA Method %
- Free Air Pipe Bomb 6 %
- Closed Chamber %

USE: Grenade, XM65

APPLICATION: Day Signal

STORAGE:

	NATO	DoD
Hazards Class (Q/D)	1.3	2
Compatibility		

NOMENCLATURE Violet Smoke IV (1)

COMPOSITION:

Ingredients	Parts by wt.
Dye Violet	42
Sodium Bicarbonate	24
Potassium Chlorate	25
Sulfur	9

DRAWING NUMBER: B143-5-1

PARAMETRIC:

Auto Ignition Temperature: 208 °C

Decomposition Temperature: 240 °C

Density:
- Bulk 0.76 g/cm^3
- Loading 1.48 g/cm^3

Fuel Oxidizer Ratio: 0.36:1

Gas Volume: 24 ml/g

Heat of Combustion: 2550 cal/g

Heat of Reaction: 1131 cal/g

STABILITY:

Hygroscopicity:
- 95 26.1 %
- 50 0.6 %

Thermal Stability:
- Loss in wt. 0 %
- Change in Configuration none

Vacuum Stability: ml/gas/40hr

Weight Loss: 0.524 %

REFERENCE/NOTES:

King & Koger
McIntyre
McKown McIntyre
Wilcox

SENSITIVITY:

Card Gap: No detonation

Detonation: No detonation,burning

Electrical Spark: 0.16 Joules

Electrostatic:
- Minimum Concentration 0.021 oz/ft^3
- Minimum Energy 0.025 Joules

Friction:
- Steel Shoe No reaction
- Fiber Shoe No reaction
- Other

Ignition & Unconfined Burning:

	EXPLODED		BURN TIME
Single Cube	Y	NX	22 Sec
Multiple Cube	Y	NX	30 Sec

Impact Sensitivity:
- BoM cm
- PA in
- BoE 15 in

OUTPUT:

Burn Time:

Density	1.16	g/cm^3	5.98 sec/cm
Density	1.32	g/cm^3	14.07 sec/cm
Density	1.48	g/cm^3	18.95 sec/cm

Critical Diameter: >1.37 meter

Critical Height: >152 cm

Pressure Time: 200 psi/g

Time to Peak 800 msec

High Explosive Equivalency:
- PA Method %
- Free Air Pipe Bomb 6 %
- Closed Chamber %

USE:

Grenade, hand, M18
Signal, smoke, aircraft XM177

APPLICATION:

Day signal

STORAGE:

	NATO	DoD
Hazards Class (Q/D)	1.3	2
Compatibility		

NOMENCLATURE Violet Smoke

COMPOSITION:

Ingredients	Parts by wt.
Violet Dye	42
Sodium Bicarbonate	24
Potassium Chlorate	25
Sulfur	9

DRAWING NUMBER: B143-5-1

PARAMETRIC:

Auto Ignition Temperature: 166 °C

Decomposition Temperature: 190 °C

Density:
- Bulk 0.76 g/cm³
- Loading 1.46 g/cm³

Fuel Oxidizer Ratio: 0.36:1

Gas Volume: 22 ml/g

Heat of Combustion: 2110 cal/g

Heat of Reaction: 1109 cal/g

STABILITY:

Hygroscopicity:
- 95 7.3 %
- 50 0.98 %

Thermal Stability:
- Loss in wt. 0 %
- Change in Configuration None

Vacuum Stability: 0.01 ml/gas/40hr

Weight Loss: 1.46 %

REFERENCE/NOTES:

McIntyre

SENSITIVITY:

Card Gap: No detonation

Detonation: No detonation, burning

Electrical Spark: >8 Joules

Electrostatic:
- Minimum Concentration 0.719 oz/ft³
- Minimum Energy >50k Joules

Friction:
- Steel Shoe No reaction
- Fiber Shoe N/a
- Other

Ignition & Unconfined Burning:

	EXPLODED		BURN TIME
Single Cube	Y	NX	56 Sec
Multiple Cube	Y	NX	113 Sec

Impact Sensitivity:
- BoM cm
- PA in
- BoE 10 in

OUTPUT:

Burn Time:
- Density 0.63 g/cm³ 6.02 sec/cm
- Density 0.76 g/cm³ 11.02 sec/cm
- Density g/cm³ sec/cm

Critical Diameter: >1.37 meter

Critical Height: >152 cm

Pressure Time: 196 psi/g

Time to Peak 832 msec

High Explosive Equivalency:
- PA Method %
- Free Air Pipe Bomb 6 %
- Closed Chamber %

USE:

Grenade, hand, smoke M18

APPLICATION:

Signaling

STORAGE:

	NATO	DoD
Hazards Class (Q/D)	1.3	2
Compatibility		

NOMENCLATURE Violet Smoke (3)

COMPOSITION:

Ingredients	Parts by wt.
Dye Violet	47
Potassium Chlorate	22
Lactose	24
Magnesium Carbonate	7

DRAWING NUMBER: B143-5-2

PARAMETRIC:

Auto Ignition Temperature: 182 °C

Decomposition Temperature: 210 °C

Density:
- Bulk 0.75 g/cm^3
- Loading 1.46 g/cm^3

Fuel Oxidizer Ratio: 1.09:1

Gas Volume: 19 ml/g

Heat of Combustion: 2430 cal/g

Heat of Reaction: 967 cal/g

STABILITY:

Hygroscopicity:
- 95 11.6%
- 50 0.9%

Thermal Stability:
- Loss in wt. 0%
- Change in Configuration None

Vacuum Stability: 0.01 ml/gas/40hr

Weight Loss: 1.1 %

REFERENCE/NOTES:

King and Koger

SENSITIVITY:

Card Gap: No Detonation

Detonation: ∿ 40% Burned

Electrical Spark: 0.21 Joules

Electrostatic:
- Minimum Concentration 0.719 oz/ft^3
- Minimum Energy 0.75 Joules

Friction:
- Steel Shoe No Reaction
- Fiber Shoe No Reaction
- Other

Ignition & Unconfined Burning:

	EXPLODED		BURN TIME	
Single Cube	Y	NX	10	Sec
Multiple Cube	Y	NX	12	Sec

Impact Sensitivity:

BoM		cm
PA		in
BoE	2 10	in

OUTPUT:

Burn Time:

Density	0.75	g/cm^3	1.97	sec/cm
Density		g/cm^3		sec/cm
Density		g/cm^3		sec/cm

Critical Diameter: 1.37 meter

Critical Height: 1.27 cm

Pressure Time: 250 psi/g

- Time to Peak 800 msec

High Explosive Equivalency:

PA Method		%
Free Air Pipe Bomb	9	%
Closed Chamber		%

USE: Canister, Smoke, 155 mm M3
Canister, Smoke, 155 mm M4

APPLICATION: Signal Colored Daylight

STORAGE:

	NATO	DoD
Hazards Class (Q/D)	1.3	2
Compatibility		

NOMENCLATURE Violet Smoke VII (4)

COMPOSITION:

Ingredients	Parts by wt.
Potassium Chlorate	30.2
Sulfar	11.8
Potassium Bicarbonate	14.
Dye Violet	44

DRAWING NUMBER: MS 590

PARAMETRIC:

Auto Ignition Temperature: 173 °C

Decomposition Temperature: 200 °C

Density: 0.75 g/cm³
Bulk
Loading 1.4 g/cm³

Fuel Oxidizer Ratio: 0.39 :1

Gas Volume: 22 ml/g

Heat of Combustion: 1086 cal/g

Heat of Reaction: cal/g

STABILITY:

Hygroscopicity:
95 10.6 %
50 0.8 %

Thermal Stability:
Loss in wt. 0 %
Change in Configuration None

Vacuum Stability: 0.021 ml/gas/40hr

Weight Loss: 0.96 %

REFERENCE/NOTES:

Pollard & Arnold

SENSITIVITY:

Card Gap: No detonation

Detonation: No detonation

Electrical Spark: 0.2 Joules

Electrostatic:
Minimum Concentration 0.359 oz/ft³
Minimum Energy 0.3 Joules

Friction:
Steel Shoe No reaction
Fiber Shoe No reaction
Other

Ignition & Unconfined Burning:

	EXPLODED		BURN TIME
Single Cube	Y	N X	28 Sec
Multiple Cube	Y	N X	39 Sec

Impact Sensitivity:
BoM cm
PA in
BoE 10 in

OUTPUT:

Burn Time:
Density 0.75 g/cm³ 5.51 sec/cm
Density g/cm³ sec/cm
Density g/cm³ sec/cm

Critical Diameter: > 1.37 meter

Critical Height: > 127 cm

Pressure Time: psi/g

Time to Peak msec

High Explosive Equivalency:
PA Method %
Free Air Pipe Bomb 5 %
Closed Chamber %

USE:
Obsolete

APPLICATION:
Day signal

STORAGE:

	NATO	DoD
Hazards Class (Q/D)	1.3	2
Compatibility		

NOMENCLATURE Violet Smoke (5)

COMPOSITION:

Ingredients	Parts by wt.
Dye Violet	47.5
Sodium Bicarbonate	4.5
Potassium Chlorate	28
Sugar	18
Asbestos	2

DRAWING NUMBER:

PARAMETRIC:

Auto Ignition Temperature: 178 °C

Decomposition Temperature: 206 °C

Density:
- Bulk 0.77 g/cm^3
- Loading 1.4 g/cm^3

Fuel Oxidizer Ratio: 0.64 :1

Gas Volume: 30 ml/g

Heat of Combustion: 2760 cal/g

Heat of Reaction: 869 cal/g

STABILITY:

Hygroscopicity:
- 95 14.3 %
- 50 0.96 %

Thermal Stability:
- Loss in wt. 0%
- Change in Configuration None

Vacuum Stability: 0.019 ml/gas/40hr

Weight Loss: 1.3%

REFERENCE/NOTES:

McIntyre

SENSITIVITY:

Card Gap: No Detonation

Detonation: No Detonation

Electrical Spark: 0.3 Joules

Electrostatic:
- Minimum Concentration 0.719 oz/ft^3
- Minimum Energy 50 Joules

Friction:
- Steel Shoe Insensitive
- Fiber Shoe Insensitive
- Other

Ignition & Unconfined Burning:

	EXPLODED		BURN TIME
Single Cube	Y	NX	Sec
Multiple Cube	Y	NX	Sec

Impact Sensitivity:
- BoM cm
- PA in
- BoE 10 in

OUTPUT:

Burn Time:
- Density 0.77 g/cm^3 3.54 sec/cm
- Density g/cm^3 sec/cm
- Density g/cm^3 sec/cm

Critical Diameter: meter

Critical Height: cm

Pressure Time: psi/g
- Time to Peak msec

High Explosive Equivalency:
- PA Method %
- Free Air Pipe Bomb 5 %
- Closed Chamber %

USE:

APPLICATION:

STORAGE:

	NATO	DoD
Hazards Class (Q/D)	1.1	7
Compatibility		

NOMENCLATURE Propelling Charge (1)

COMPOSITION:

Ingredients	Parts by wt.
Potassium Nitrate	67.2
Sulfur	9.4
Charcoal	14.2
Calcium Carbonate	9.2

DRAWING NUMBER:

PARAMETRIC:

Auto Ignition Temperature: °C

Decomposition Temperature: °C

Density:

Bulk 1.69-1.76 g/cm^3

Loading 1.82-1.89 g/cm^3

Fuel Oxidizer Ratio: 0.35:1

Gas Volume: ml/g

Heat of Combustion: cal/g

Heat of Reaction: cal/g

STABILITY:

Hygroscopicity:

95 %

50 %

Thermal Stability:

Loss in wt. %

Change in Configuration

Vacuum Stability: ml/gas/40hr

Weight Loss: %

REFERENCE/NOTES:

Dillehay

SENSITIVITY:

Card Gap:

Detonation:

Electrical Spark: Joules

Electrostatic:

Minimum Concentration oz/ft^3

Minimum Energy Joules

Friction:

Steel Shoe

Fiber Shoe

Other

Ignition & Unconfined Burning:

	EXPLODED		BURN TIME
Single Cube	Y	N	Sec
Multiple Cube	Y	N	Sec

Impact Sensitivity:

BoM cm

PA in

BoE in

OUTPUT:

Burn Time:

Density g/cm^3 sec/cm

Density g/cm^3 sec/cm

Density g/cm^3 sec/cm

Critical Diameter: meter

Critical Height: cm

Pressure Time: psi/g

Time to Peak msec

High Explosive Equivalency:

PA Method %

Free Air Pipe Bomb %

Closed Chamber %

USE: M127A1 Propelling Charge
M125 Hand Signal Propelling Charge

APPLICATION: Expulsion, Propelling Charge

STORAGE: NATO DoD

Hazards Class (Q/D)

Compatibility

NOMENCLATURE Expulsion Charge (2)

COMPOSITION:

Ingredients	Parts by wt.
M9 Propellant	71.8
Black Powder (FFFGMIL-P-223	7
Nitracel Cement	14.2
Potassium Chlorate/Boron (82.82/17.18)	7

DRAWING NUMBER: 65C11050

PARAMETRIC:

Auto Ignition Temperature: °C

Decomposition Temperature: °C

Density:
Bulk 1.63 g/cm^3
Loading 1.63 g/cm^3

Fuel Oxidizer Ratio: :1

Gas Volume: 2250 ml/g

Heat of Combustion: 2462 cal/g

Heat of Reaction: cal/g

STABILITY:

Hygroscopicity:
95 %
50 0.50 %

Thermal Stability:
Loss in wt. 6.51 %
Change in Configuration

Vacuum Stability: ml/gas/40hr

Weight Loss: 1.33 %

REFERENCE/NOTES:

SENSITIVITY:

Card Gap:

Detonation:

Electrical Spark: >50 Joules

Electrostatic:
Minimum Concentration oz/ft^3
Minimum Energy Joules

Friction:
Steel Shoe No Reaction
Fiber Shoe
Other

Ignition & Unconfined Burning:

	EXPLODED		BURN TIME
Single Cube	Y	N	Sec
Multiple Cube	Y	N	Sec

Impact Sensitivity:
BoM cm
PA in
BoE in

OUTPUT:

Burn Time:
Density 1.63 g/cm^3 0.9 sec/cm
Density g/cm^3 sec/cm
Density g/cm^3 sec/cm

Critical Diameter: meter

Critical Height: cm

Pressure Time: 85 psi/g
Time to Peak 65 msec

High Explosive Equivalency:
PA Method %
Free Air Pipe Bomb %
Closed Chamber %

USE: Expulsion Charge for WDU-4A/A

APPLICATION:

STORAGE: NATO DoD
Hazards Class (Q/D)
Compatibility

NOMENCLATURE CS Pyrotechnic Mixture (3)

COMPOSITION:

Ingredients	Parts by wt.
Magnesium Carbonate	9
Chemical Agent CS	40
Lactose	18
Potassium Chlorate	30
Nitrocellulose/Acetone 8/92	3

DRAWING NUMBER: B143-14-10

PARAMETRIC:

Auto Ignition Temperature: 176 °C

Decomposition Temperature: 203 °C

Density:
- Bulk 0.97 g/cm^3
- Loading 1.14-1.44 g/cm^3

Fuel Oxidizer Ratio: 0.83 :1

Gas Volume: 53 ml/g

Heat of Combustion: 3250 cal/g

Heat of Reaction: 1476 cal/g

STABILITY:

Hygroscopicity:
- 95 1.19%
- 50 0.16%

Thermal Stability:
- Loss in wt. 0%
- Change in Configuration None

Vacuum Stability: 0.11 ml/gas/40hr

Weight Loss: 0.42%

REFERENCE/NOTES:

King and Koger

SENSITIVITY:

Card Gap: No Detonation

Detonation: No Detonation

Electrical Spark: 0.5 Joules

Electrostatic:
- Minimum Concentration oz/ft^3
- Minimum Energy Joules

Friction:
- Steel Shoe No Reaction
- Fiber Shoe No Reaction
- Other

Ignition & Unconfined Burning:

	EXPLODED		BURN TIME	
Single Cube	Y	NX	35	Sec
Multiple Cube	Y	NX	35	Sec

Impact Sensitivity:
- BoM cm
- PA in
- BoE 15 in

OUTPUT:

Burn Time:
- Density 0.97 g/cm^3 6.89 sec/cm
- Density g/cm^3 sec/cm
- Density g/cm^3 sec/cm

Critical Diameter: >1 meter

Critical Height: >130 cm

Pressure Time: psi/g

Time to Peak msec

High Explosive Equivalency:
- PA Method %
- Free Air Pipe Bomb 34 %
- Closed Chamber %

USE: Cluster Bomb CSE159
Canister, Cluster XM15

APPLICATION: Irritant

STORAGE:

	NATO	DoD
Hazards Class (Q/D)	1.1	7
Compatibility		

NOMENCLATURE CS Riot Mixture (4)

COMPOSITION:

Ingredients	Parts by wt.
Sugar	18
Potassium Chlorate	27
Chemical Agent CS	41
Magnesium Carborate	12
Bender (Dextrin/water (15/85))f	2

DRAWING NUMBER: B143-14-7

PARAMETRIC:

Auto Ignition Temperature: 165 °C

Decomposition Temperature: 187 °C

Density:
- Bulk 0.88 g/cm^3
- Loading 1.14-1.4 g/cm^3

Fuel Oxidizer Ratio: 0.49:1

Gas Volume: 47 ml/g

Heat of Combustion: 1070 cal/g

Heat of Reaction: 424 cal/g

STABILITY:

Hygroscopicity:
- 95 2.50%
- 50 0.16%

Thermal Stability:
- Loss in wt. 0%
- Change in Configuration None

Vacuum Stability: 0.06 ml/gas/40hr

Weight Loss: 0.13%

REFERENCE/NOTES:

King and Koger
McIntyre

SENSITIVITY:

Card Gap: No Detonation

Detonation: No Detonation

Electrical Spark: 1.25 Joules

Electrostatic:
- Minimum Concentration 1.62 oz/ft^3
- Minimum Energy 50 Joules

Friction:
- Steel Shoe No Reaction
- Fiber Shoe No Reaction
- Other

Ignition & Unconfined Burning:

	EXPLODED		BURN TIME	
Single Cube	Y	NX	4	Sec
Multiple Cube	Y	NX	7	Sec

Impact Sensitivity:
- BoM cm
- PA in
- BoE 10 in

OUTPUT:

Burn Time:
- Density 0.88 g/cm^3 0.79 sec/cm
- Density g/cm^3 sec/cm
- Density g/cm^3 sec/cm

Critical Diameter: meter

Critical Height: cm

Pressure Time: psi/g

Time to Peak msec

High Explosive Equivalency:
- PA Method 2 %
- Free Air Pipe Bomb %
- Closed Chamber %

USE: Cartridge 40mm CS
Launcher and Cartridge, Cml Agent E8
Grenade, Hand Riot CS XM47

APPLICATION: Irritant

STORAGE:

	NATO	DoD
Hazards Class (Q/D)	1.3	2
Compatibility		

NOMENCLATURE Chemical Agent CS (5)

COMPOSITION:

Ingredients	Parts by wt.
Chemical Agent CS	100

DRAWING NUMBER: T752

PARAMETRIC:

Auto Ignition Temperature: °C

Decomposition Temperature: °C

Density:
- Bulk 0.98 g/cm^3
- Loading 1.14-1.44 g/cm^3

Fuel Oxidizer Ratio: :1

Gas Volume: ml/g

Heat of Combustion: cal/g

Heat of Reaction: cal/g

STABILITY:

Hygroscopicity:
- 95 0%
- 50 None%

Thermal Stability:
- Loss in wt. %
- Change in Configuration

Vacuum Stability: ml/gas/40hr

Weight Loss: %

REFERENCE/NOTES:

King and Koger

SENSITIVITY:

Card Gap: No Detonation

Detonation: No Detonation

Electrical Spark: 0.5 Joules

Electrostatic:
- Minimum Concentration oz/ft^3
- Minimum Energy Joules

Friction:
- Steel Shoe No Reaction
- Fiber Shoe No Reaction
- Other

Ignition & Unconfined Burning:

	EXPLODED			BURN TIME
Single Cube	Y	N	X	13 Sec
Multiple Cube	Y	N	X	17 Sec

Impact Sensitivity:
- BoM cm
- PA in
- BoE 15 in

OUTPUT:

Burn Time:
- Density 0.98 g/cm^3 2.56 sec/cm
- Density g/cm^3 sec/cm
- Density g/cm^3 sec/cm

Critical Diameter: meter

Critical Height: cm

Pressure Time: psi/g

Time to Peak msec

High Explosive Equivalency:
- PA Method %
- Free Air Pipe Bomb 12 %
- Closed Chamber %

USE:

APPLICATION:

STORAGE:

	NATO	DoD
Hazards Class (Q/D)	1.1	7
Compatibility		

NOMENCLATURE Booby Trap Simulator (1)

COMPOSITION:

Ingredients	Parts by wt.
Magnesium (Grade A Type 1)	17
Antimony Sulfide (Grade 1 Class C)	33
Potassium Perchlorate	50

DRAWING NUMBER:

PARAMETRIC:

Auto Ignition Temperature: 562 °C

Decomposition Temperature: 599 °C

Density:
- Bulk 1.16 g/cm³
- Loading g/cm³

Fuel Oxidizer Ratio: 1 :1

Gas Volume: 33 ml/g

Heat of Combustion: 3364 cal/g

Heat of Reaction: 1042 cal/g

STABILITY:

Hygroscopicity:
- 95 1.17%
- 50 0.01%

Thermal Stability:
- 11 Loss in wt. 0%
- Change in Configuration None

Vacuum Stability: 0.18 ml/gas/40hr

Weight Loss: 0.013%

REFERENCE/NOTES:

AMCP706-188
Ellern

SENSITIVITY:

Card Gap: No Detonation

Detonation: Samples Burned

Electrical Spark: 1.125 Joules

Electrostatic:
- Minimum Concentration oz/ft³
- Minimum Energy Joules

Friction:
- Steel Shoe SNAPS
- Fiber Shoe No Reaction
- Other

Ignition & Unconfined Burning:

	EXPLODED		BURN TIME
Single Cube	Y	N X	1 Sec
Multiple Cube	Y	N X	1 Sec

Impact Sensitivity:
- BoM cm
- PA in
- BoE 3.75 in

OUTPUT:

Burn Time:
- Density g/cm³ 0.19 sec/cm
- Density g/cm³ sec/cm
- Density g/cm³ sec/cm

Critical Diameter: meter

Critical Height: cm

Pressure Time: psi/g

Time to Peak msec

High Explosive Equivalency:
- PA Method %
- Free Air Pipe Bomb %
- Closed Chamber %

USE: M117 Booby Trap Simulator

APPLICATION: Simulation Sound and Flash

STORAGE:

	NATO	DoD
Hazards Class (Q/D)	1.1	7
Compatibility		

NOMENCLATURE Booby Trap Simulator (2)

COMPOSITION:

Ingredients	Parts by wt.
Potassium Chlorate	73
Gallic Acid	24
Red Gum	3

DRAWING NUMBER:

PARAMETRIC:

Auto Ignition Temperature: 453 °C

Decomposition Temperature: 496 °C

Density:
Bulk 0.96 g/cm^3
Loading g/cm^3

Fuel Oxidizer Ratio: 0.33:1

Gas Volume: 53 ml/g

Heat of Combustion: 2310 cal/g

Heat of Reaction: 942 cal/g

STABILITY:

Hygroscopicity:
95 11.16%
50 0.9 %

Thermal Stability:
Loss in wt. 0 %
Change in Configuration None

Vacuum Stability: 0.18 ml/gas/40hr

Weight Loss: 0.76 %

REFERENCE/NOTES:

AMCP706-138
Ellern

SENSITIVITY:

Card Gap: No Detonation

Detonation: Sample Burned

Electrical Spark: 0.625 Joules

Electrostatic:
Minimum Concentration oz/ft^3
Minimum Energy Joules

Friction:
Steel Shoe SNAPS
Fiber Shoe No Reaction
Other

Ignition & Unconfined Burning:

	EXPLODED		BURN TIME	
Single Cube	Y	NX	4	Sec
Multiple Cube	Y	NX	4.5	Sec

Impact Sensitivity:
BoM cm
PA in
BoE 3.75 in

OUTPUT:

Burn Time:
Density 0.96 g/cm^3 0.79 sec/cm
Density g/cm^3 sec/cm
Density g/cm^3 sec/cm

Critical Diameter: meter

Critical Height: cm

Pressure Time: psi/g
Time to Peak msec

High Explosive Equivalency:
PA Method %
Free Air Pipe Bomb %
Closed Chamber %

USE: M119 Whistling Booby Trap Simulator

APPLICATION: Whistling Sound
Troop Maneuvers

STORAGE:

	NATO	DoD
Hazards Class (Q/D)	1.1	7
Compatibility		

NOMENCLATURE Gun Flash Simulator (3)

COMPOSITION:

Ingredients	Parts by wt.
Magnesium	45
Potassium Perchlorate	35
Barium Nitrate	15
Barium Oxalate	3
Calcium Oxalate	1
Graphite	1

DRAWING NUMBER:

PARAMETRIC:

Auto Ignition Temperature: 596 °C

Decomposition Temperature: 637 °C

Density:
- Bulk 1.21 g/cm^3
- Loading 1.21 g/cm^3

Fuel Oxidizer Ratio: 0.82:1

Gas Volume: 48 ml/g

Heat of Combustion: 3641 cal/g

Heat of Reaction: 1040 cal/g

STABILITY:

Hygroscopicity:
- 95 1.17%
- 50 0.07%

Thermal Stability:
- Loss in wt. 0%
- Change in Configuration None

Vacuum Stability: 0.11 ml/gas/40hr

Weight Loss: 0.09%

REFERENCE/NOTES:

Ellern
AMCP706-188
TM9-1370-203-12

SENSITIVITY:

Card Gap: No Detonation

Detonation: Samples Burned

Electrical Spark: 0.875 Joules

Electrostatic:
- Minimum Concentration oz/ft^3
- Minimum Energy Joules

Friction:
- Steel Shoe Snaps
- Fiber Shoe No Reaction
- Other

Ignition & Unconfined Burning:

	EXPLODED		BURN TIME
Single Cube	Y	NX	1 Sec
Multiple Cube	Y	NX	1 Sec

Impact Sensitivity:
- BoM cm
- PA in
- BoE 10 in

OUTPUT:

Burn Time:
- Density 1.21 g/cm^3 0.19 sec/cm
- Density g/cm^3 sec/cm
- Density g/cm^3 sec/cm

Critical Diameter: meter

Critical Height: cm

Pressure Time: psi/g

Time to Peak msec

High Explosive Equivalency:
- PA Method %
- Free Air Pipe Bomb %
- Closed Chamber %

USE: M110 Gun Flash Simulator

APPLICATION: Artillery Flash Simulators and Report; Simulate battle conditions in artillery maneuvers and as a decoy in forward combat areas

STORAGE:

	NATO	DoD
Hazards Class (Q/D)	1.1	7
Compatibility		

NOMENCLATURE Ground Burst Simulator (4)

COMPOSITION:

Ingredients	Parts by wt.
Magnesium	34
Aluminum	26
Potassium Perchlorate	40

DRAWING NUMBER:

PARAMETRIC:

Auto Ignition Temperature: 762 °C

Decomposition Temperature: 810 °C

Density:
- Bulk 1.3 g/cm^3
- Loading g/cm^3

Fuel Oxidizer Ratio: 1.5 :1

Gas Volume: 76 ml/g

Heat of Combustion: cal/g

Heat of Reaction: cal/g

STABILITY:

Hygroscopicity:
- 95 0.11%
- 50 0.01%

Thermal Stability:
- Loss in wt. 0 %
- Change in Configuration None

Vacuum Stability: .22 ml/gas/40hr

Weight Loss: 0.001%

REFERENCE/NOTES:

AMCP706-188
Ellern
TM9-1370-203-12

SENSITIVITY:

Card Gap: No Detonation

Detonation: Slight Mushrooming

Electrical Spark: 0.725 Joules

Electrostatic:
- Minimum Concentration oz/ft^3
- Minimum Energy Joules

Friction:
- Steel Shoe Snaps
- Fiber Shoe No Reaction
- Other

Ignition & Unconfined Burning:

	EXPLODED		BURN TIME	
Single Cube	Y	NX	1	Sec
Multiple Cube	Y	NX	1	Sec

Impact Sensitivity:
- BoM cm
- PA in
- BoE 10 in

OUTPUT:

Burn Time:
- Density 1.3 g/cm^3 0.19 sec/cm
- Density g/cm^3 sec/cm
- Density g/cm^3 sec/cm

Critical Diameter: ~0.05 meter

Critical Height: ~5.08 cm

Pressure Time: psi/g
- Time to Peak msec

High Explosive Equivalency:
- PA Method %
- Free Air Pipe Bomb %
- Closed Chamber %

USE: M115 Projectile Ground Burst Simulator

APPLICATION: Whistling, Report and Flash Provides battle noises and effects during troup maneuvers.

STORAGE:

	NATO	DoD
Hazards Class (Q/D)	1.1	7
Compatibility		

NOMENCLATURE Air Burst Simulator Projectile Mixture (5)

COMPOSITION:

Ingredients	Parts by wt.
Aluminum (flaked Type 1)	9
Black Powder	91

DRAWING NUMBER:

PARAMETRIC:

Auto Ignition Temperature: 300 °C

Decomposition Temperature: 344 °C

Density:
- Bulk 1.09 g/cm^3
- Loading 1.09 g/cm^3

Fuel Oxidizer Ratio: :1

Gas Volume: 153 ml/g

Heat of Combustion: 1828 cal/g

Heat of Reaction: 851 cal/g

STABILITY:

Hygroscopicity:
- 95 2.09 %
- 50 0.63 %

Thermal Stability:
- Loss in wt. 0 %
- Change in Configuration None

Vacuum Stability: 0.3 ml/gas/40hr

Weight Loss: 0.042 %

REFERENCE/NOTES:

Weingarten
McIntyre

SENSITIVITY:

Card Gap: No Detonation

Detonation: Mushrooming

Electrical Spark: 0.225 Joules

Electrostatic:
- Minimum Concentration oz/ft^3
- Minimum Energy Joules

Friction:
- Steel Shoe No Reaction
- Fiber Shoe No Reaction
- Other

Ignition & Unconfined Burning:

	EXPLODED		BURN TIME
Single Cube	Y	NX	5 Sec
Multiple Cube	Y	NX	5 Sec

Impact Sensitivity:
- BoM cm
- PA 14 in
- BoE 3.75 in

OUTPUT:

Burn Time:

Density	1.09	g/cm^3	0.9	sec/cm
Density		g/cm^3		sec/cm
Density		g/cm^3		sec/cm

Critical Diameter: 0.04 meter

Critical Height: 4.9 cm

Pressure Time: 505 psi/g

- Time to Peak 240 msec

High Explosive Equivalency:
- PA Method 45 %
- Free Air Pipe Bomb %
- Closed Chamber %

USE: M74A1 and M74 Simulator, Projectile Airbust

APPLICATION: Flash Report Simulate Artillery Airburst for Troop Training

STORAGE:

	NATO	DoD
Hazards Class (Q/D)	1.1	7
Compatibility		

COMPOSITION:

Ingredients	Parts by wt.
Potassium Perchlorate	64
Antimony Sulfide	3.5
Aluminum Flaked	22.5
Sulfur, Grade B	10

DRAWING NUMBER:

PARAMETRIC:

Auto Ignition Temperature: 360 °C

Decomposition Temperature: 415 °C

Density:
Bulk 1.16 g/cm³
Loading 1.16 g/cm³

Fuel Oxidizer Ratio: 0.48 :1

Gas Volume: 178 ml/g

Heat of Combustion: 2176 cal/g

Heat of Reaction: 790 cal/g

STABILITY:

Hygroscopicity:
95 0.1 %
50 0.02 %

Thermal Stability:
Loss in wt. 0 %
Change in Configuration None

Vacuum Stability: 0.23 ml/gas/40hr

Weight Loss: 0.0016 %

REFERENCE/NOTES:

Weingarten
McIntyre
Taylor and Kaye

SENSITIVITY:

Card Gap: No Detonation

Detonation: Mushrooming

Electrical Spark: >0.1 Joules

Electrostatic:
Minimum Concentration 0.352 oz/ft³
Minimum Energy 1.25 Joules

Friction:
Steel Shoe Complete detonation
Fiber Shoe Complete detonation
Other

Ignition & Unconfined Burning:

	EXPLODED		BURN TIME
Single Cube	Y	NX	<1 Sec
Multiple Cube	Y	N	<1 Sec

Impact Sensitivity:

BoM		cm
PA	20	in
BoE	10	in

OUTPUT:

Burn Time:

Density	1.16	g/cm³	<0.1 sec/cm
Density		g/cm³	sec/cm
Density		g/cm³	sec/cm

Critical Diameter: 0.01 meter

Critical Height: 3.96 cm

Pressure Time: 645 psi/g

Time to Peak 263 msec

High Explosive Equivalency:
PA Method 80 %
Free Air Pipe Bomb %
Closed Chamber %

USE: Detonation Simulator, Explosive M80

APPLICATION: Explosive Simulator in Booby Traps; Land Mines detection and deactivating Training, Artillery, and hand grenades

STORAGE:

	NATO	DoD
Hazards Class (Q/D)	1.1	7
Compatibility		

NOMENCLATURE First Fire Mixture VII (1)

COMPOSITION:

Ingredients	Parts by wt.
Titanum	25
Iron Oxide (Black)	25
Silicon	25
Red Lead	25

DRAWING NUMBER: B143-9-1

PARAMETRIC:

Auto Ignition Temperature: 762 °C

Decomposition Temperature: 821 °C

Density:
- Bulk 1.33 g/cm^3
- Loading g/cm^3

Fuel Oxidizer Ratio: 1 :1

Gas Volume: 11 ml/g

Heat of Combustion: 810 cal/g

Heat of Reaction: 360 cal/g

STABILITY:

Hygroscopicity:
- 95 1.14%
- 50 0.08%

Thermal Stability:
- Loss in wt. 0%
- Change in Configuration None

Vacuum Stability: 0.08 ml/gas/40hr

Weight Loss: 0.06%

REFERENCE/NOTES:

Ellern
King and Koger

SENSITIVITY:

Card Gap: No Detonation

Detonation: Complete Burning

Electrical Spark: 0.875 Joules

Electrostatic:
- Minimum Concentration oz/ft^3
- Minimum Energy Joules

Friction:
- Steel Shoe No Reaction
- Fiber Shoe No Reaction
- Other

Ignition & Unconfined Burning:

	EXPLODED		BURN TIME
Single Cube	Y	NX	6 Sec
Multiple Cube	Y	NX	7 Sec

Impact Sensitivity:
- BoM cm
- PA in
- BoE 15 in

OUTPUT:

Burn Time:
- Density 1.33 g/cm^3 1.18 sec/cm
- Density g/cm^3 sec/cm
- Density g/cm^3 sec/cm

Critical Diameter: meter

Critical Height: cm

Pressure Time: psi/g
- Time to Peak msec

High Explosive Equivalency:
- PA Method %
- Free Air Pipe Bomb 0 %
- Closed Chamber %

USE: Grenade, Hand, AN-M14

APPLICATION: Intermediate Charge

STORAGE:

	NATO	DoD
Hazards Class (Q/D)	1.3	2
Compatibility		

NOMENCLATURE First Fire Mixture X (2)

COMPOSITION:

Ingredients	Parts by wt.
Silicon	25
Red Lead	50
Titanium	25

DRAWING NUMBER: C143-9-3
2

PARAMETRIC:

Auto Ignition Temperature: 780 °C

Decomposition Temperature: 896 °C

Density:
Bulk 2.33 g/cm^3
Loading g/cm^3

Fuel Oxidizer Ratio: 1:1

Gas Volume: 14 ml/g

Heat of Combustion: 880 cal/g

Heat of Reaction: 275 cal/g

STABILITY:

Hygroscopicity:
95 2.09%
50 0.12%

Thermal Stability:
Loss in wt. 0 %
Change in Configuration None

Vacuum Stability: 0.06 ml/gas/40hr

Weight Loss: 0.042%

REFERENCE/NOTES:

Ellern
King and Koger

SENSITIVITY:

Card Gap: No Detonation

Detonation: Complete Burning

Electrical Spark: 1.625 Joules

Electrostatic:
Minimum Concentration oz/ft^3
Minimum Energy Joules

Friction:
Steel Shoe No Reaction
Fiber Shoe No Reaction
Other

Ignition & Unconfined Burning:

	EXPLODED		BURN TIME	
Single Cube	Y	NX	6	Sec
Multiple Cube	Y	NX	7	Sec

Impact Sensitivity:
BoM cm
PA in
BoE 15 in

OUTPUT:

Burn Time:
Density 2.33 g/cm^3 1.18 sec/cm
Density g/cm^3 sec/cm
Density g/cm^3 sec/cm

Critical Diameter: meter

Critical Height: cm

Pressure Time: psi/g
Time to Peak msec

High Explosive Equivalency:
PA Method %
Free Air Pipe Bomb 0 %
Closed Chamber %

USE: Bomb, Smoke, Blu-16/B
Grenade, Hand, HC-AN-M8
Grenade, Hand Riot XM74E1

APPLICATION: Intermediate Charge

STORAGE:

	NATO	DoD
Hazards Class (Q/D)	1.3	2
Compatibility		

NOMENCLATURE First Fire Mixture (3)

COMPOSITION:

Ingredients	Parts by wt.
Titanium	25
Red Lead	25
Silicon	25
Iron Oxide (Red)	25

DRAWING NUMBER: B143-9-5

PARAMETRIC:

Auto Ignition Temperature: 865 °C

Decomposition Temperature: 997 °C

Density:
- Bulk 1.42 g/cm^3
- Loading g/cm^3

Fuel Oxidizer Ratio: 1 :1

Gas Volume: 22 ml/g

Heat of Combustion: 1020 cal/g

Heat of Reaction: 343 cal/g

STABILITY:

Hygroscopicity:
- 95 1.16%
- 50 0.17%

Thermal Stability:
- Loss in wt. 0%
- Change in Configuration None

Vacuum Stability: 0.09 ml/gas/40hr

Weight Loss: 0.09%

REFERENCE/NOTES:

King and Koger

SENSITIVITY:

Card Gap: No Detonation

Detonation: Complete Burning

Electrical Spark: 1.125 Joules

Electrostatic:
- Minimum Concentration 1.62 oz/ft^3
- Minimum Energy 50K Joules

Friction:
- Steel Shoe No Reaction
- Fiber Shoe No Reaction
- Other

Ignition & Unconfined Burning:

	EXPLODED		BURN TIME	
Single Cube	Y	NX	8	Sec
Multiple Cube	Y	NX	14	Sec

Impact Sensitivity:
- BoM cm
- PA in
- BoE 15 in

OUTPUT:

Burn Time:
- Density 1.42 g/cm^3 1.57 sec/cm
- Density g/cm^3 sec/cm
- Density g/cm^3 sec/cm

Critical Diameter: meter

Critical Height: cm

Pressure Time: psi/g

Time to Peak msec

High Explosive Equivalency:
- PA Method %
- Free Air Pipe Bomb 0 %
- Closed Chamber %

USE: File Destroyer Incendiary, M3 Cluster, Incendiary Bomb TH3, M36

APPLICATION: Intermediate Charge

STORAGE:

	NATO	DoD
Hazards Class (Q/D)	1.3	2
Compatibility		

NOMENCLATURE First Fire Mixture (4)

COMPOSITION:

Ingredients	Parts by wt.
Barium Nitrate	50
Zirconium Hydride	15
Silicon	20
TNC	10
Laminac	5

DRAWING NUMBER: PA9251742

PARAMETRIC:

Auto Ignition Temperature: 476 °C

Decomposition Temperature: 550 °C

Density:
Bulk 0.96 g/cm^3
Loading g/cm^3

Fuel Oxidizer Ratio: 0.7:1

Gas Volume: 55 ml/g

Heat of Combustion: cal/g

Heat of Reaction: cal/g

STABILITY:

Hygroscopicity:
95 0.53%
50 0.28%

Thermal Stability:
Loss in wt. 0%
Change in Configuration None

Vacuum Stability: 0.39 ml/gas/40hr

Weight Loss: 0.06%

REFERENCE/NOTES:

Ellern
Napadensky, H.S., Swatosh J.J. Jr.,
Humpheys, A.

SENSITIVITY:

Card Gap: No Detonation

Detonation: Completel Burning

Electrical Spark: 9.76 Joules

Electrostatic:
Minimum Concentration 1.62 oz/ft^3
Minimum Energy 50K Joules

Friction:
Steel Shoe Crackles
Fiber Shoe No Reaction
Other

Ignition & Unconfined Burning:

	EXPLODED		BURN TIME
Single Cube	Y	NX	20 Sec
Multiple Cube	Y	NX	20 Sec

Impact Sensitivity:

BoM		cm
PA	26	in
BoE	15	in

OUTPUT:

Burn Time:

Density	0.96 g/cm^3	3.94 sec/cm
Density	g/cm^3	sec/cm
Density	g/cm^3	sec/cm

Critical Diameter: meter

Critical Height: cm

Pressure Time: psi/g

Time to Peak msec

High Explosive Equivalency:
PA Method 30 %
Free Air Pipe Bomb %
Closed Chamber %

USE: MK24 Parachute Flare
M314A3 105 mm

APPLICATION: Final Igniting Compound

STORAGE:

	NATO	DoD
Hazards Class (Q/D)	1.1	7
Compatibility		

NOMENCLATURE First Fire Mixture VI (5)

COMPOSITION:

Ingredients	Parts by wt.
Silicone	33
Red Lead	55
Titanium	12
Bonder*	8-10

*Nitrocellulose/Acetone 8/92

DRAWING NUMBER:

PARAMETRIC:

Auto Ignition Temperature: 777 °C

Decomposition Temperature: 856 °C

Density:
Bulk 2.36 g/cm^3
Loading g/cm^3

Fuel Oxidizer Ratio: 0.82 :1

Gas Volume: 15 ml/g

Heat of Combustion: 825 cal/g

Heat of Reaction: 290 cal/g

STABILITY:

Hygroscopicity:
95 1.96 %
50 0.14 %

Thermal Stability:
Loss in wt. 0 %
Change in Configuration —

Vacuum Stability: 0.063 ml/gas/40hr

Weight Loss: 0.04 %

REFERENCE/NOTES:

McIntyre

SENSITIVITY:

Card Gap: No Detonation

Detonation: Compute Burning

Electrical Spark: 1.625 Joules

Electrostatic:
Minimum Concentration N/A oz/ft^3
Minimum Energy N/A Joules

Friction:
Steel Shoe No Reaction
Fiber Shoe No Reaction
Other

Ignition & Unconfined Burning:

	EXPLODED		BURN TIME	
Single Cube	Y	N X	8	Sec
Multiple Cube	Y	N X	11	Sec

Impact Sensitivity:
BoM cm
PA in
BoE 15 in

OUTPUT:

Burn Time:
Density 2.36 g/cm^3 1.57 sec/cm
Density g/cm^3 sec/cm
Density g/cm^3 sec/cm

Critical Diameter: N/A meter

Critical Height: N/A cm

Pressure Time: N/A psi/g
Time to Peak msec

High Explosive Equivalency:
PA Method N/A %
Free Air Pipe Bomb %
Closed Chamber %

USE: Smoke Pot, Floating, AN-M7A1
Smoke Pot, Floating, AN-M7
Fuze, Generator Delay M220

APPLICATION: Intermediate Charge

STORAGE:

	NATO	DoD
Hazards Class (Q/D)		
Compatibility	1.3	2

NOMENCLATURE First Fire Mixture FF30

COMPOSITION:

Ingredients	Parts by wt.
Titanium	30
Red Lead	70

DRAWING NUMBER: B143-9-4

PARAMETRIC:

Auto Ignition Temperature: 659 °C

Decomposition Temperature: 710 °C

Density:
- Bulk 2.26 g/cm^3
- Loading g/cm^3

Fuel Oxidizer Ratio: 0.42 :1

Gas Volume: N/A ml/g

Heat of Combustion: N/A cal/g

Heat of Reaction: N/A cal/g

STABILITY:

Hygroscopicity:
- 95 1.08 %
- 50 0.11 %

Thermal Stability:
- Loss in wt. 0 %
- Change in Configuration None

Vacuum Stability: – ml/gas/40hr

Weight Loss: 0.059 %

REFERENCE/NOTES:

McIntyre

SENSITIVITY:

Card Gap: No Detonation

Detonation: Complete Burning

Electrical Spark: Joules

Electrostatic:
- Minimum Concentration N/A oz/ft^3
- Minimum Energy N/A Joules

Friction:
- Steel Shoe Crackles
- Fiber Shoe No Reaction
- Other

Ignition & Unconfined Burning:

	EXPLODED		BURN TIME	
Single Cube	Y	NX	13	Sec
Multiple Cube	Y	NX	17	Sec

Impact Sensitivity:
- BoM cm
- PA in
- BoE 10 in

OUTPUT:

Burn Time:
- Density 2.26 g/cm^3 2.55 sec/cm
- Density g/cm^3 sec/cm
- Density g/cm^3 sec/cm

Critical Diameter: meter

Critical Height: cm

Pressure Time:
- N/A psi/g
- Time to Peak N/A msec

High Explosive Equivalency:
- PA Method N/A %
- Free Air Pipe Bomb %
- Closed Chamber %

USE: Cryptographic Equip. Destroyer Incend., TH1, M1A2
Cryptographic Equip. Destroyer Incend., TH1, M2A1

APPLICATION: Intermediate Charge

STORAGE:

	NATO	DoD
Hazards Class (Q/D)		
Compatibility	1.1	7

NOMENCLATURE Fuel Mix VI (1)

COMPOSITION:

Ingredients	Parts by wt.
Potassium Chlorate	42
Sugar	28
Magnesium Carbonate	30
Nitrocellulose/Acetone (8/92)	44

DRAWING NUMBER: B143-10-1

PARAMETRIC:

Auto Ignition Temperature: 170 °c

Decomposition Temperature: 193 °c

Density:
- Bulk 0.88 g/cm^3
- Loading 1.14 g/cm^3

Fuel Oxidizer Ratio: 1.5:1

Gas Volume: 53 ml/g

Heat of Combustion: 1000 cal/g

Heat of Reaction: 365 cal/g

STABILITY:

Hygroscopicity:
- 95 1.3 %
- 50 0.017 %

Thermal Stability:
- Loss in wt. 0 %
- Change in Configuration None

Vacuum Stability: 0.11 ml/gas/40hr

Weight Loss: 0.066 %

REFERENCE/NOTES:

King and Koger
Ellern

SENSITIVITY:

Card Gap: No Detonation

Detonation: No Detonation

Electrical Spark: 0.002 Joules

Electrostatic:
- Minimum Concentration 0.002 oz/ft^3
- Minimum Energy 1 Joules

Friction:
- Steel Shoe No Reaction
- Fiber Shoe No Reaction
- Other

Ignition & Unconfined Burning:

	EXPLODED		BURN TIME	
Single Cube	Y	NX	4	Sec
Multiple Cube	Y	NX	7	Sec

Impact Sensitivity:
- BoM cm
- PA in
- BoE 10 in

OUTPUT:

Burn Time:
- Density 0.88 g/cm^3 0.79 sec/cm
- Density g/cm^3 sec/cm
- Density g/cm^3 sec/cm

Critical Diameter: meter

Critical Height: cm

Pressure Time: psi/g
- Time to Peak msec

High Explosive Equivalency:
- PA Method %
- Free Air Pipe Bomb 14 %
- Closed Chamber %

USE: Grenade, Hand Riot CS XM54
Grenade, Hand Riot CS M7A3
Grenade, Hand Riot, CS, ABC-M742

APPLICATION: Used to disseminate CS

STORAGE:

	NATO	DoD
Hazards Class (Q/D)	1.1	7
Compatibility		

NOMENCLATURE Fuel Mixture III (2)

COMPOSITION:

Ingredients	Parts by wt.
Ammonium Nitrate	74
Charcoal	16
Potassium Nitrate	8
Fuel Oil VV-F-815	2

DRAWING NUMBER: B143-10-4

PARAMETRIC:

Auto Ignition Temperature: 206 °C

Decomposition Temperature: 223 °C

Density:
- Bulk 0.86 g/cm^3
- Loading 1.14 g/cm^3

Fuel Oxidizer Ratio: 0.22:1

Gas Volume: 51 ml/g

Heat of Combustion: 1146 cal/g

Heat of Reaction: 406 cal/g

STABILITY:

Hygroscopicity:
- 95 1.16%
- 50 0.02%

Thermal Stability:
- Loss in wt. 0%
- Change in Configuration None

Vacuum Stability: 0.12 ml/gas/40hr

Weight Loss: 0.07 %

REFERENCE/NOTES:

SENSITIVITY:

Card Gap: No Detonation

Detonation: No Detonation

Electrical Spark: 0.25 Joules

Electrostatic:
- Minimum Concentration 0.3125 oz/ft^3
- Minimum Energy 2.5 Joules

Friction:
- Steel Shoe No Reaction
- Fiber Shoe No Reaction
- Other

Ignition & Unconfined Burning:

	EXPLODED		BURN TIME	
Single Cube	Y	NX	6	Sec
Multiple Cube	Y	NX	8	Sec

Impact Sensitivity:
- BoM cm
- PA in
- BoE 10 in

OUTPUT:

Burn Time:
- Density 0.86 g/cm^3 1.18 sec/cm
- Density g/cm^3 sec/cm
- Density g/cm^3 sec/cm

Critical Diameter: meter

Critical Height: cm

Pressure Time: psi/g
- Time to Peak msec

High Explosive Equivalency:
- PA Method %
- Free Air Pipe Bomb %
- Closed Chamber %

USE: Smoke Pot M6

APPLICATION:

STORAGE:

	NATO	DoD
Hazards Class (Q/D)	1.1	7
Compatibility		

NOMENCLATURE Fuel Mixture (3)

COMPOSITION:

Ingredients	Parts by wt.
Ammonium Nitrate	85
C-Rubber	12
Carbon Black	2
Ammonium Dichromate	1

DRAWING NUMBER: B143-10-5

PARAMETRIC:

Auto Ignition Temperature: 214 °C

Decomposition Temperature: 231 °C

Density:
- Bulk 0.9 g/cm³
- Loading 1.2 g/cm³

Fuel Oxidizer Ratio: 0.16 :1

Gas Volume: 38 ml/g

Heat of Combustion: 1412 cal/g

Heat of Reaction: 602 cal/g

STABILITY:

Hygroscopicity:
- 95 1.1 %
- 50 0.03 %

Thermal Stability:
- Loss in wt. 0 %
- Change in Configuration

Vacuum Stability: 0.11 ml/gas/40hr

Weight Loss: 0.07 %

REFERENCE/NOTES:

SENSITIVITY:

Card Gap: No Detonation

Detonation: No Detonation

Electrical Spark: 1.125 Joules

Electrostatic:
- Minimum Concentration 0.719 oz/ft³
- Minimum Energy 5 Joules

Friction:
- Steel Shoe No Reaction
- Fiber Shoe No Reaction
- Other

Ignition & Unconfined Burning:

	EXPLODED		BURN TIME
Single Cube	Y	NX	7 Sec
Multiple Cube	Y	NX	9 Sec

Impact Sensitivity:
- BoM cm
- PA in
- BoE 10 in

OUTPUT:

Burn Time:
- Density 0.9 g/cm³ 1.38 sec/cm
- Density g/cm³ sec/cm
- Density g/cm³ sec/cm

Critical Diameter: meter

Critical Height: cm

Pressure Time: psi/g
- Time to Peak msec

High Explosive Equivalency:
- PA Method %
- Free Air Pipe Bomb %
- Closed Chamber %

USE: Smoke Pot Floating AN-M7A1

APPLICATION:

STORAGE:

	NATO	DoD
Hazards Class (Q/D)	1.1	7
Compatibility		

NOMENCLATURE Igniter Mixture (1)

COMPOSITION:

Ingredients	Parts by wt.
Sodium Nitrate	47
Sugar	47
Charcoal	6

DRAWING NUMBER: B143-8-1

PARAMETRIC:

Auto Ignition Temperature: 280 °C

Decomposition Temperature: 321 °C

Density:
- Bulk 0.75 g/cm^3
- Loading 1.2-1.4 g/cm^3

Fuel Oxidizer Ratio: 1.13:1

Gas Volume: 26 ml/g

Heat of Combustion: 2014 cal/g

Heat of Reaction: 940 cal/g

STABILITY:

Hygroscopicity:
- 95 3.56%
- 50 0.16%

Thermal Stability:
- Loss in wt. 0%
- Change in Configuration None

Vacuum Stability: 0.1 ml/gas/40hr

Weight Loss: 0.19%

REFERENCE/NOTES:

SENSITIVITY:

Card Gap: No Detonation

Detonation: No Detonation

Electrical Spark: 8 Joules

Electrostatic:
- Minimum Concentration oz/ft^3
- Minimum Energy Joules

Friction:
- Steel Shoe No Reaction
- Fiber Shoe No Reaction
- Other

Ignition & Unconfined Burning:

	EXPLODED		BURN TIME	
Single Cube	Y	NX	75	Sec
Multiple Cube	Y	NX	160	Sec

Impact Sensitivity:
- BoM cm
- PA in
- BoE 15 in

OUTPUT:

Burn Time:
- Density 0.75 g/cm^3 15 sec/cm
- Density g/cm^3 sec/cm
- Density g/cm^3 sec/cm

Critical Diameter: meter

Critical Height: cm

Pressure Time: psi/g

Time to Peak msec

High Explosive Equivalency:
- PA Method %
- Free Air Pipe Bomb %
- Closed Chamber %

USE: Document Destroyer, Incendiary M3

APPLICATION: Base Charge

STORAGE:

	NATO	DoD
Hazards Class (Q/D)	1.3	2
Compatibility		

NOMENCLATURE Igniter Mixture III (2)

COMPOSITION:

Ingredients	Parts by wt.
Iron Oxide	50
Titanium Powder	32.5
Zirconium Powder	17.5
Nitrocellulose/Acetone (8/92)	44

DRAWING NUMBER: B143-8-2

PARAMETRIC:

Auto Ignition Temperature: 456 °C

Decomposition Temperature: 492 °C

Density:
- Bulk 1.30 g/cm^3
- Loading 1.5-1.7 g/cm^3

Fuel Oxidizer Ratio: 1:1

Gas Volume: ml/g

Heat of Combustion: 1176 cal/g

Heat of Reaction: 630 cal/g

STABILITY:

Hygroscopicity:
- 95 1.67 %
- 50 0.10 %

Thermal Stability:
- Loss in wt. 0 %
- Change in Configuration None

Vacuum Stability: 0.09 ml/gas/40hr

Weight Loss: 0.053%

REFERENCE/NOTES:

Ellern

SENSITIVITY:

Card Gap: No Detonation

Detonation: Complete Burning

Electrical Spark: 2.5 Joules

Electrostatic:
- Minimum Concentration oz/ft^3
- Minimum Energy Joules

Friction:
- Steel Shoe No Reaction
- Fiber Shoe No Reaction
- Other

Ignition & Unconfined Burning:

	EXPLODED		BURN TIME
q Single Cube	Y	NX	4 Sec
Multiple Cube	Y	NX	7 Sec

Impact Sensitivity:
- BoM cm
- PA in
- BoE 15 in

OUTPUT:

Burn Time:
- Density 1.30 g/cm^3 0.79 sec/cm
- Density g/cm^3 sec/cm
- Density g/cm^3 sec/cm

Critical Diameter: meter

Critical Height: cm

Pressure Time: psi/g

Time to Peak msec

High Explosive Equivalency:
- PA Method %
- Free Air Pipe Bomb %
- Closed Chamber %

USE: Signal Smoke, Aircraft White XM176
Bomb Smoke, BLU-16/B
Grenade Hand HC AN-M8

APPLICATION: Intermediate Charge

STORAGE:

	NATO	DoD
Hazards Class (Q/D)	1.3	2
Compatibility		

NOMENCLATURE Special Igniter Mixture (3)

COMPOSITION:

Ingredients	Parts by wt.
Boron	25
Potassium Nitrate	75
VAAR	1

DRAWING NUMBER: PA-SI193

PARAMETRIC:

Auto Ignition Temperature: 414 °C

Decomposition Temperature: 602 °C

Density:
- Bulk 0.87 g/cm^3
- Loading g/cm^3

Fuel Oxidizer Ratio: 0.34 :1

Gas Volume: 44 ml/g

Heat of Combustion: 1594 cal/g

Heat of Reaction: 1594 cal/g

STABILITY:

Hygroscopicity:
- 95 1.56 %
- 50 0.39 %

Thermal Stability:
- Loss in wt. 0 %
- Change in Configuration None

Vacuum Stability: 0.16 ml/gas/40hr

Weight Loss: 0.76 %

REFERENCE/NOTES:

PA TM4981
PA TM2146
PA TR221

SENSITIVITY:

Card Gap: No Detonation

Detonation: Complete Burning

Electrical Spark: 0.124 Joules

Electrostatic:
- Minimum Concentration 0.36 oz/ft^3
- Minimum Energy 10 Joules

Friction:
- Steel Shoe Complete Burning
- Fiber Shoe No Reaction
- Other

Ignition & Unconfined Burning:

	EXPLODED		BURN TIME
Single Cube	Y	NX	5 Sec
Multiple Cube	Y	NX	5 Sec

Impact Sensitivity:

BoM		cm
PA	10	in
BoE	3.75	in

OUTPUT:

Burn Time:

Density	0.37	g/cm^3	0.9	sec/cm
Density		g/cm^3		sec/cm
Density		g/cm^3		sec/cm

Critical Diameter: (confined) 0.054 meter

Critical Height: cm

Pressure Time: 290 psi/g

- Time to Peak 305 msec

High Explosive Equivalency:
- PA Method 32 %
- Free Air Pipe Bomb %
- Closed Chamber %

USE:

APPLICATION: Intermediate charge

STORAGE:

	NATO	DoD
Hazards Class (Q/D)	1.1	7
Compatibility		

NOMENCLATURE Ignition Mixture AIA (4)

COMPOSITION:

Ingredients	Parts by wt.
Zirconium	65
Red Iron Oxide	25
Super Floss *	10

*Trade name for finely ground culminated diatomaceous earth

DRAWING NUMBER:
Bu Ord Dwg 1170731

PARAMETRIC:

Auto Ignition Temperature: 427 °C

Decomposition Temperature: 496 °C

Density:
Bulk 1.48 g/cm^3
Loading g/cm^3

Fuel Oxidizer Ratio: 2.6 :1

Gas Volume: 25 ml/g

Heat of Combustion: 550 cal/g

Heat of Reaction: cal/g

STABILITY:

Hygroscopicity:
95 1.8 %
50 0.06 %

Thermal Stability:
Loss in wt. 0 %
Change in Configuration None

Vacuum Stability: 0.18 ml/gas/40hr

Weight Loss: 0.96 %

REFERENCE/NOTES:

Ellern

SENSITIVITY:

Card Gap: No Detonation

Detonation: Complete Burning

Electrical Spark: 0.005 Joules

Electrostatic:
Minimum Concentration oz/ft^3
Minimum Energy Joules

Friction:
Steel Shoe Complete Burning
Fiber Shoe
Other

Ignition & Unconfined Burning:

	EXPLODED		BURN TIME	
Single Cube	Y	NX	0.8	Sec
Multiple Cube	Y	NX	1.4	Sec

Impact Sensitivity:
BoM cm
PA in
BoE 3.75 in

OUTPUT:

Burn Time:
Density g/cm^3 0.016 sec/cm
Density g/cm^3 sec/cm
Density g/cm^3 sec/cm

Critical Diameter: meter

Critical Height: cm

Pressure Time: psi/g
Time to Peak msec

High Explosive Equivalency:
PA Method %
Free Air Pipe Bomb %
Closed Chamber %

USE:

APPLICATION: Ignition Mixture

STORAGE:

	NATO	DoD
Hazards Class (Q/D)	1.1	7
Compatibility		

NOMENCLATURE Ignition Mixture (5)

COMPOSITION:

Ingredients	Parts by wt.
Silicon	33.3
Lead Dioxide	33.3
Cuprous Oxide	33.3

DRAWING NUMBER:

PARAMETRIC:

Auto Ignition Temperature: 401 °C

Decomposition Temperature: 440 °C

Density:

Bulk 1.17 g/cm^3

Loading g/cm^3

Fuel Oxidizer Ratio: 0.5 :1

Gas Volume: 5-10 ml/g

Heat of Combustion: 344 cal/g

Heat of Reaction: cal/g

STABILITY:

Hygroscopicity:

95 1.07 %

50 0.043 %

Thermal Stability:

Loss in wt. 0 %

Change in Configuration None

Vacuum Stability: ml/gas/40hr

Weight Loss: 0.83 %

REFERENCE/NOTES:

Ellern

SENSITIVITY:

Card Gap: No Detonation

Detonation: No Detonation

Electrical Spark: 0.05 Joules

Electrostatic:

Minimum Concentration oz/ft^3

Minimum Energy Joules

Friction:

Steel Shoe No Reaction

Fiber Shoe

Other

Ignition & Unconfined Burning:

	EXPLODED		BURN TIME
Single Cube	Y	N X	3 Sec
Multiple Cube	Y	N X	4 Sec

Impact Sensitivity:

BoM cm

PA in

BoE 10 in

OUTPUT:

Burn Time:

Density g/cm^3 sec/cm

Density g/cm^3 sec/cm

Density g/cm^3 sec/cm

Critical Diameter: meter

Critical Height: cm

Pressure Time: psi/g

Time to Peak msec

High Explosive Equivalency:

PA Method %

Free Air Pipe Bomb %

Closed Chamber %

USE: Drift and Float Signals

APPLICATION: Ignition Mix

STORAGE:

	NATO	DoD
Hazards Class (Q/D)	1.1	7
Compatibility		

NOMENCLATURE Starter Mixture I (1)

COMPOSITION:

Ingredients	Parts by wt.
Potassium Perchlorate	30
Calcium Silicide	35
Antimony	35
Nitrocellulose/Acetone 8/92	66

DRAWING NUMBER: B143-7-2

PARAMETRIC:

Auto Ignition Temperature: 446 °C

Decomposition Temperature: 516 °C

Density:
- Bulk 2.28 g/cm^3
- Loading g/cm^3

Fuel Oxidizer Ratio: 0.54 :1

Gas Volume: 12 ml/g

Heat of Combustion: 3636 cal/g

Heat of Reaction: 1812 cal/g

STABILITY:

Hygroscopicity:
- 95 1.95 %
- 50 0. %

Thermal Stability:
- Loss in wt. 0%
- Change in Configuration

Vacuum Stability: 0.11 ml/gas/40hr

Weight Loss: 1.02 %

REFERENCE/NOTES:

SENSITIVITY:

Card Gap: No Detonation

Detonation: Complete Burning

Electrical Spark: Joules

Electrostatic:
- Minimum Concentration oz/ft^3
- Minimum Energy Joules

Friction:
- Steel Shoe No Reaction
- Fiber Shoe No Reaction
- Other

Ignition & Unconfined Burning:

	EXPLODED		BURN TIME
Single Cube	Y	N X	26 Sec
Multiple Cube	Y	N X	28 Sec

Impact Sensitivity:

BoM		cm
PA		in
BoE	15	in

OUTPUT:

Burn Time:

Density	2.28	g/cm^3	5.12 sec/cm
Density		g/cm^3	sec/cm
Density		g/cm^3	sec/cm

Critical Diameter: meter

Critical Height: cm

Pressure Time: psi/g

- Time to Peak msec

High Explosive Equivalency:
- PA Method %
- Free Air Pipe Bomb %
- Closed Chamber %

USE: Gun, Portable Flame Thrower, M7
Igniter, Cylinder Flame Thrower M1

APPLICATION:
2nd Increment in Fuze Train

STORAGE:

	NATO	DoD
Hazards Class (Q/D)	1.3	2
Compatibility		

NOMENCLATURE Starter Mixture II (2)

COMPOSITION:

Ingredients	Parts by wt.
Silicon	26
Potassium Nitrate	35
Charcoal	4
Iron Oxide (Black)	22
Aluminum	13

DRAWING NUMBER: B143-7-5

PARAMETRIC:

Auto Ignition Temperature: 421 °C

Decomposition Temperature: 487 °C

Density:
- Bulk 1.22 g/cm^3
- Loading g/cm^3

Fuel Oxidizer Ratio: 0.75:1

Gas Volume: 16 ml/g

Heat of Combustion: 2690 cal/g

Heat of Reaction: 1186 cal/g

STABILITY:

Hygroscopicity:
- 95 2.3 %
- 50 0.56 %

Thermal Stability:
- Loss in wt. 0%
- Change in Configuration None

Vacuum Stability: 0.07 ml/gas/40hr

Weight Loss: 1.13%

REFERENCE/NOTES:

King & Koger

SENSITIVITY:

Card Gap: No Detonation

Detonation: Complete Burning

Electrical Spark: 1.5 Joules

Electrostatic:
- Minimum Concentration oz/ft^3
- Minimum Energy Joules

Friction:
- Steel Shoe No Reaction
- Fiber Shoe No Reaction
- Other

Ignition & Unconfined Burning:

	EXPLODED		BURN TIME
Single Cube	Y	NX	10 Sec
Multiple Cube	Y	NX	13 Sec

Impact Sensitivity:
- BoM cm
- PA in
- BoE 15 in

OUTPUT:

Burn Time:
- Density 1.22 g/cm^3 1.97 sec/cm
- Density g/cm^3 sec/cm
- Density g/cm^3 sec/cm

Critical Diameter: meter

Critical Height: cm

Pressure Time: psi/g
- Time to Peak msec

High Explosive Equivalency:
- PA Method %
- Free Air Pipe Bomb %
- Closed Chamber %

USE: Canister Smoke, 155mm M2
Canister Smoke, 155mm M1
Canister Smoke, 105mm M1

APPLICATION:

2nd increment fuze train

STORAGE:

	NATO	DoD
Hazards Class (Q/D)	1.3	2
Compatibility		

NOMENCLATURE Starter Mixture III (3)

COMPOSITION:

Ingredients	Parts by wt.
Potassium Nitrate	70.5
Charcoal	29.5

DRAWING NUMBER: B143-7-6

PARAMETRIC:

Auto Ignition Temperature: 418 °C

Decomposition Temperature: 466 °C

Density:
Bulk 0.86 g/cm^3
Loading g/cm^3

Fuel Oxidizer Ratio: 0.42 :1

Gas Volume: 43 ml/g

Heat of Combustion: 2100 cal/g

Heat of Reaction: 980 cal/g

STABILITY:

Hygroscopicity:
95 1.16 %
50 0.04 %

Thermal Stability:
Loss in wt. 0 %
Change in Configuration None

Vacuum Stability: 0.1 ml/gas/40hr

Weight Loss: 0.98 %

REFERENCE/NOTES:

King & Koger
Ellern

SENSITIVITY:

Card Gap: No Detonation

Detonation: Complete Burning

Electrical Spark: 0.75 Joules

Electrostatic:
Minimum Concentration oz/ft^3
Minimum Energy Joules

Friction:
Steel Shoe No Reaction
Fiber Shoe No Reaction
Other

Ignition & Unconfined Burning:

	EXPLODED		BURN TIME	
Single Cube	Y	N X	19.5	Sec
Multiple Cube	Y	N X	32	Sec

Impact Sensitivity:
BoM cm
PA in
BoE 10 in

OUTPUT:

Burn Time:
Density 0.86 g/cm^3 3.84 sec/cm
Density g/cm^3 sec/cm
Density g/cm^3 sec/cm

Critical Diameter: confined 0.381 meter

Critical Height: cm

Pressure Time: psi/g
Time to Peak msec

High Explosive Equivalency:
PA Method %
Free Air Pipe Bomb 16 %
Closed Chamber %

USE: Canister, 105mm XM7 (XM8)
Canister, 105mm CS XM7
Canister, 105mm M2
Canister, Shell 4.2 XM8

APPLICATION:
2nd Increment in Fuze Train

STORAGE:

	NATO	DoD
Hazards Class (Q/D)	1.1	7
Compatibility		

NOMENCLATURE Starter Mixture V (4)

COMPOSITION:

Ingredients	Parts by wt.
Silicon	40
Potassium Nitrate	54
Charcoal	6
Nitrocellulose/Acetone (4/96)	3

DRAWING NUMBER: B143-7-9

PARAMETRIC:

Auto Ignition Temperature: 501 °C

Decomposition Temperature: 541 °C

Density:
- Bulk 1.24 g/cm^3
- Loading g/cm^3

Fuel Oxidizer Ratio: 0.91 :1

Gas Volume: 14 ml/g

Heat of Combustion: 2116 cal/g

Heat of Reaction: 980 cal/g

STABILITY:

Hygroscopicity:
- 95 0.98 %
- 50 0.01 %

Thermal Stability:
- Loss in wt. 0 %
- Change in Configuration None

Vacuum Stability: 0.08 ml/gas/40hr

Weight Loss: 0.077 %

REFERENCE/NOTES:

Ellern

SENSITIVITY:

Card Gap: No Detonation

Detonation: Complete Burning

Electrical Spark: 0.75 Joules

Electrostatic:
- Minimum Concentration oz/ft^3
- Minimum Energy Joules

Friction:
- Steel Shoe No Reaction
- Fiber Shoe No Reaction
- Other

Ignition & Unconfined Burning:

	EXPLODED		BURN TIME
Single Cube	Y	N X	3 Sec
Multiple Cube	Y	N X	5 Sec

Impact Sensitivity:
- BoM cm
- PA in
- BoE 15 in

OUTPUT:

Burn Time:
- Density 1.24 g/cm^3 0.59 sec/cm
- Density g/cm^3 sec/cm
- Density g/cm^3 sec/cm

Critical Diameter: meter

Critical Height: cm

Pressure Time: psi/g
- Time to Peak msec

High Explosive Equivalency:
- PA Method %
- Free Air Pipe Bomb %
- Closed Chamber %

USE: Grenade, Hand, Smoke M8

APPLICATION: Intermediate Charge

STORAGE:

	NATO	DoD
Hazards Class (Q/D)	1.3	2
Compatibility		

NOMENCLATURE Starter Mixture VI (5)

COMPOSITION:

Ingredients	Parts by wt.
Potassium Chlorate	43.2
Sulfur	16.8
Sodium Bicarbonate	30
Corn Starch	10

DRAWING NUMBER: B143-7-3

PARAMETRIC:

Auto Ignition Temperature: 216 °C

Decomposition Temperature: 246 °C

Density:
- Bulk 1.06 g/cm^3
- Loading g/cm^3

Fuel Oxidizer Ratio: 0.62 :1

Gas Volume: 22 ml/g

Heat of Combustion: 2180 cal/g

Heat of Reaction: 942 cal/g

STABILITY:

Hygroscopicity:
- 95 2.19 %
- 50 0.26 %

Thermal Stability:
- Loss in wt. 0 %
- Change in Configuration None

Vacuum Stability: 0.1 ml/gas/40hr

Weight Loss: 1.02 %

REFERENCE/NOTES:

R059

SENSITIVITY:

Card Gap: No Detonation

Detonation: 40% Burned

Electrical Spark: 1.15 Joules

Electrostatic:
- Minimum Concentration oz/ft^3
- Minimum Energy Joules

Friction:
- Steel Shoe No Reaction
- Fiber Shoe No Reaction
- Other

Ignition & Unconfined Burning:

	EXPLODED		BURN TIME
Single Cube	Y	N X	50 Sec
Multiple Cube	Y	N X	60 Sec

Impact Sensitivity:
- BoM cm
- PA in
- BoE 15 in

OUTPUT:

Burn Time:
- Density 1.06 g/cm^3 9.84 sec/cm
- Density g/cm^3 sec/cm
- Density g/cm^3 sec/cm

Critical Diameter: meter

Critical Height: cm

Pressure Time: psi/g
- Time to Peak msec

High Explosive Equivalency:
- PA Method %
- Free Air Pipe Bomb %
- Closed Chamber %

USE: Experimental

APPLICATION:

STORAGE:

	NATO	DoD
Hazards Class (Q/D)	1.3	2
Compatibility		

NOMENCLATURE Starter Mixture VI (6)

COMPOSITION:

Ingredients	Parts by wt.
Potassium Chlorate	43.2
Sulfur	16.8
Sodium Bicarbonate	30
Corn Starch	10
Nitrocellulose/Acetone (4/96)	40

DRAWING NUMBER: B143-7-3

PARAMETRIC:

Auto Ignition Temperature: 216 °C

Decomposition Temperature: 246 °C

Density:
- Bulk 1.33 g/cm^3
- Loading g/cm^3

Fuel Oxidizer Ratio: 0.62 :1

Gas Volume: 33 ml/g

Heat of Combustion: 2180 cal/g

Heat of Reaction: 946 cal/g

STABILITY:

Hygroscopicity:
- 95 2.11%
- 50 0.21%

Thermal Stability:
- Loss in wt. 0 %
- Change in Configuration None

Vacuum Stability: 0.1 ml/gas/40hr

Weight Loss: 0.98%

REFERENCE/NOTES:

Ellern
King & Koger

SENSITIVITY:

Card Gap: No Detonation

Detonation: Complete Burning

Electrical Spark: 1.125 Joules

Electrostatic:
- Minimum Concentration oz/ft^3
- Minimum Energy Joules

Friction:
- Steel Shoe No Reaction
- Fiber Shoe No Reaction
- Other

Ignition & Unconfined Burning:

	EXPLODED		BURN TIME
Single Cube	Y	N X	12 Sec
Multiple Cube	Y	N X	20 Sec

Impact Sensitivity:
- BoM cm
- PA in
- BoE 3.25 in

OUTPUT:

Burn Time:
- Density 1.33 g/cm^3 2.36 sec/cm
- Density g/cm^3 sec/cm
- Density g/cm^3 sec/cm

Critical Diameter: (confined) 0.0381 meter

Critical Height: cm

Pressure Time: psi/g

Time to Peak msec

High Explosive Equivalency:
- PA Method %
- Free Air Pipe Bomb 20 %
- Closed Chamber %

USE: Grenade, Hand, Smoke M18
Cartridge 40mm Riot CS EZO, XM651
Signal Smoke Aircraft XM177

APPLICATION:

2nd Increment in Fuze Train

STORAGE:

	NATO	DoD
Hazards Class (Q/D)	1.1	7
Compatibility		

NOMENCLATURE Starter Mixture 12 (7)

COMPOSITION:

Ingredients	Parts by wt.
Potassium Nitrate	70.5
Charcoal	29.5
Acetone/Nitrocellulose (96/4)	50

DRAWING NUMBER: B143-7-1

PARAMETRIC:

Auto Ignition Temperature: 401 °C

Decomposition Temperature: 456 °C

Density:
- Bulk 1.04 g/cm^3
- Loading g/cm^3

Fuel Oxidizer Ratio: 0.42 :1

Gas Volume: 45 ml/g

Heat of Combustion: 2210 cal/g

Heat of Reaction: 965 cal/g

STABILITY:

Hygroscopicity:
- 95 1.16 %
- 50 0.04 %

Thermal Stability:
- Loss in wt. 0 %
- Change in Configuration None

Vacuum Stability: 0.1 ml/gas/40hr

Weight Loss: 0.98 %

REFERENCE/NOTES:

Ellern
King & Koger

SENSITIVITY:

Card Gap: No Detonation

Detonation: No Detonation

Electrical Spark: 6.75 Joules

Electrostatic:
- Minimum Concentration oz/ft^3
- Minimum Energy Joules

Friction:
- Steel Shoe No Reaction
- Fiber Shoe No Reaction
- Other

Ignition & Unconfined Burning:

	EXPLODED		BURN TIME
Single Cube	Y	NX	0.8 Sec
Multiple Cube	Y	NX	1.6 Sec

Impact Sensitivity:
- BoM cm
- PA in
- BoE 15 in

OUTPUT:

Burn Time:

Density	1.04 g/cm^3	0.18 sec/cm
Density	g/cm^3	sec/cm
Density	g/cm^3	sec/cm

Critical Diameter: meter

Critical Height: cm

Pressure Time: psi/g

Time to Peak msec

High Explosive Equivalency:
- PA Method %
- Free Air Pipe Bomb 5.5 %
- Closed Chamber %

USE: Grenade, Hand, Riot CS ABC M7A2
" " " " M7A3

APPLICATION:

2nd Increment of Fuze Train

STORAGE:

	NATO	DoD
Hazards Class (Q/D)	1.1	7
Compatibility		

NOMENCLATURE Start Mixture (8)

COMPOSITION:

Ingredients	Parts by wt.
Silicon	26
Potassium Nitrate	35
Charcoal	4
Iron Oxide (Black)	22
Aluminum	13
Nitrocellulose/Acetone (6/94)	16.7

DRAWING NUMBER: B143-7-4

PARAMETRIC:

Auto Ignition Temperature: 401 °C

Decomposition Temperature: 462 °C

Density:
Bulk 1.14 g/cm^3
Loading g/cm^3

Fuel Oxidizer Ratio: 0.75:1

Gas Volume: 17 ml/g

Heat of Combustion: 2605 cal/g

Heat of Reaction: 1102 cal/g

STABILITY:

Hygroscopicity:
95 1.6 %
50 0.21 %

Thermal Stability:
Loss in wt. 0 %
Change in Configuration None

Vacuum Stability: 0.09 ml/gas/40hr

Weight Loss: 0.96 %

REFERENCE/NOTES:

Ellern
King & Koger

SENSITIVITY:

Card Gap: No Detonation

Detonation: Complete Burning

Electrical Spark: 1.25 Joules

Electrostatic:
Minimum Concentration oz/ft^3
Minimum Energy Joules

Friction:
Steel Shoe No Reaction
Fiber Shoe No Reaction
Other

Ignition & Unconfined Burning:

	EXPLODED		BURN TIME
Single Cube	Y	NX	5 Sec
Multiple Cube	Y	NX	6 Sec

Impact Sensitivity:
BoM cm
PA in
BoE 15 in

OUTPUT:

Burn Time:
Density 1.14 g/cm^3 0.9 sec/cm
Density g/cm^3 sec/cm
Density g/cm^3 sec/cm

Critical Diameter: meter

Critical Height: cm

Pressure Time: psi/g
Time to Peak msec

High Explosive Equivalency:
PA Method %
Free Air Pipe Bomb %
Closed Chamber %

USE: Bomb, Smoke, BLU-16B
Signal Smoke, Aircraft, White
XM176
Grenade, Hand, HC -AN-MB

APPLICATION: Intermediate Charge

STORAGE:

	NATO	DoD
Hazards Class (Q/D)	1.3	2
Compatibility		

NOMENCLATURE Plastic Bonded Starter Mixture (9)

COMPOSITION:

Ingredients	Parts by wt.
Potassium Chlorate	39
Sodium Bicarbonate	9
Acra-wax-c-filler	3
Synthesizer-Plasticizer	5
NG+845 Polymerercaptin Crosslinker	22
XD 2679 Resin	22

DRAWING NUMBER:

PARAMETRIC:

Auto Ignition Temperature: 150 °C

Decomposition Temperature: 172 °C

Density:
Bulk 1.25 g/cm^3
Loading g/cm^3

Fuel Oxidizer Ratio: 1 :1

Gas Volume: 48 ml/g

Heat of Combustion: 5540 cal/g

Heat of Reaction: 1865 cal/g

STABILITY:

Hygroscopicity:
95 0.98 %
50 0.02 %

Thermal Stability:
Loss in wt. 0 %
Change in Configuration None

Vacuum Stability: 0.23 ml/gas/40hr

Weight Loss: 0.014 %

REFERENCE/NOTES:

Pankow

SENSITIVITY:

Card Gap: No Detonation

Detonation: No Detonation

Electrical Spark: Joules

Electrostatic:
Minimum Concentration oz/ft^3
Minimum Energy Joules

Friction:
Steel Shoe
Fiber Shoe
Other

Ignition & Unconfined Burning:

	EXPLODED		BURN TIME
Single Cube	Y	N X	14 Sec
Multiple Cube	Y	N X	25 Sec

Impact Sensitivity:

BoM	cm
PA	in
BoE	15 in

OUTPUT:

Burn Time:

Density	1.25 g/cm^3	2.76 sec/cm
Density	g/cm^3	sec/cm
Density	g/cm^3	sec/cm

Critical Diameter: meter

Critical Height: cm

Pressure Time: psi/g

Time to Peak msec

High Explosive Equivalency:

PA Method	%
Free Air Pipe Bomb	8 %
Closed Chamber	%

USE: Grenade, Smoke Mi8
Grenade Riot CS M7A3

APPLICATION: Experimental Composition

STORAGE:

	NATO	DoD
Hazards Class (Q/D)	1.3	2
Compatibility		

NOMENCLATURE Starter Mixture (10)

COMPOSITION:

Ingredients	Parts by wt.
Silicon	50
Lead Dioxide	20
Cupric Oxide	30

DRAWING NUMBER:

PARAMETRIC:

Auto Ignition Temperature: 476°C

Decomposition Temperature: 500°C

Density:
- Bulk 1.18 g/cm^3
- Loading g/cm^3

Fuel Oxidizer Ratio: 1:1

Gas Volume: 3 ml/g

Heat of Combustion: 380 cal/g

Heat of Reaction: cal/g

STABILITY:

Hygroscopicity:
- 95 1.04 %
- 50 0.07 %

Thermal Stability:
- Loss in wt. 0 %
- Change in Configuration None

Vacuum Stability: 0.09 ml/gas/40hr

Weight Loss: 0.043 %

REFERENCE/NOTES:

Ellern

SENSITIVITY:

Card Gap: No Detonation

Detonation: Complete Burning

Electrical Spark: Joules

Electrostatic:
- Minimum Concentration oz/ft^3
- Minimum Energy Joules

Friction:
- Steel Shoe
- Fiber Shoe
- Other

Ignition & Unconfined Burning:

	EXPLODED		BURN TIME
Single Cube	Y	N X	Sec
Multiple Cube	Y	N X	Sec

Impact Sensitivity:
- BoM cm
- PA in
- BoE 15 in

OUTPUT:

Burn Time:
- Density g/cm^3 sec/cm
- Density g/cm^3 sec/cm
- Density g/cm^3 sec/cm

Critical Diameter: meter

Critical Height: cm

Pressure Time: psi/g

Time to Peak msec

High Explosive Equivalency:
- PA Method %
- Free Air Pipe Bomb %
- Closed Chamber %

USE: Mk25 Mod 0 & Mod Z Flare

APPLICATION: Starter Composition

STORAGE: NATO DoD

Hazards Class (Q/D)

Compatibility

NOMENCLATURE Red Lead/Silicon Delay Mixture V (1)

COMPOSITION:

Ingredients	Parts by wt.
Silicon	20
Red Lead	80
Nitrocellulose/Acetone (10/90)	1.8

DRAWING NUMBER: B143-12-1

PARAMETRIC:

Auto Ignition Temperature: 671 °C

Decomposition Temperature: 764 °C

Density:
- Bulk: 2.46 g/cm^3
- Loading: 2.8-3.8 g/cm^3

Fuel Oxidizer Ratio: 0.25:1

Gas Volume: 11 ml/g

Heat of Combustion: 660 cal/g

Heat of Reaction: 335 cal/g

STABILITY:

Hygroscopicity:
- 95: 2.6 %
- 50: 0.013 %

Thermal Stability:
- Loss in wt.: 0 %
- Change in Configuration: None

Vacuum Stability: 0.1 ml/gas/40hr

Weight Loss: %

REFERENCE/NOTES:

Ellern
King & Koger

SENSITIVITY:

Card Gap: No Detonation

Detonation: Complete Burning

Electrical Spark: 3.125 Joules

Electrostatic:
- Minimum Concentration: oz/ft^3
- Minimum Energy: Joules

Friction:
- Steel Shoe: No Reaction
- Fiber Shoe: No Reaction
- Other

Ignition & Unconfined Burning:

	EXPLODED		BURN TIME
Single Cube	Y	NX	3 Sec
Multiple Cube	Y	NX	4 Sec

Impact Sensitivity:
- BoM: cm
- PA: in
- BoE: >15 in

OUTPUT:

Burn Time:
- Density 2.46 g/cm^3: 0.59 sec/cm
- Density g/cm^3: sec/cm
- Density 1.5-4.33 sec/cm

Critical Diameter: meter

Critical Height: cm

Pressure Time: psi/g

Time to Peak: msec

High Explosive Equivalency:
- PA Method: %
- Free Air Pipe Bomb: 0 %
- Closed Chamber: %

USE: Grenade, Hand, Riot CS XM54: Grenade, Hand AN-M14: Grenade, Hand, Riot CN-DM, M6A1: Grenade, Hand Riot CS M7A3: Fuze Smoke, Blue 16/B: Fuze Hand Grenade

APPLICATION: First Fire Mix M201A1 Fuze

STORAGE:

	NATO	DoD
Hazards Class (Q/D)	1.3	2
Compatibility		

NOMENCLATURE Red Lead/Silicon Delay Mixture VII (2)

COMPOSITION:

Ingredients	Parts by wt.
Silicon	15
Red Lead	85
Nitrocellulose/Acetone 8/92	1.8

DRAWING NUMBER: C143-12-5

PARAMETRIC:

Auto Ignition Temperature: 721 °C

Decomposition Temperature: 786 °C

Density:
Bulk 2.40 g/cm^3
Loading 2.8-3.8 g/cm^3

Fuel Oxidizer Ratio: 0.18 :1

Gas Volume: 10.6 ml/g

Heat of Combustion: 650 cal/g

Heat of Reaction: 328 cal/g

STABILITY:

Hygroscopicity:
95 2.01 %
50 0.1 %

Thermal Stability:
Loss in wt. 0 %
Change in Configuration None

Vacuum Stability: 0.1 ml/gas/40hr

Weight Loss: 0.019%

REFERENCE/NOTES:

SENSITIVITY:

Card Gap: No Detonation

Detonation: No Detonation

Electrical Spark: Joules

Electrostatic:
Minimum Concentration oz/ft^3
Minimum Energy Joules

Friction:
Steel Shoe No Reaction
Fiber Shoe No Reaction
Other

Ignition & Unconfined Burning:

	EXPLODED		BURN TIME
Single Cube	Y	N X	3 Sec
Multiple Cube	Y	N X	4 Sec

Impact Sensitivity:
BoM cm
PA in
BoE >15 in

OUTPUT:

Burn Time:
Density g/cm^3 0.59 sec/cm
Density g/cm^3 sec/cm
Density g/cm^3 sec/cm

Critical Diameter: meter

Critical Height: cm

Pressure Time: psi/g
Time to Peak msec

High Explosive Equivalency:
PA Method 0 %
Free Air Pipe Bomb 0 %
Closed Chamber %

USE: Adapter Projector Land Mine XM42(E5)

APPLICATION: Delay

STORAGE:
Hazards Class (Q/D) NATO 1.3
Compatibility

NOMENCLATURE Red Lead/Silicon Delay Mixture (3)

COMPOSITION:

Ingredients	Parts by wt.
Silicon	12.5
Red Lead	87.5
Nitrocellulose/Acetone 8/92	1.8

DRAWING NUMBER: C143-12-6

PARAMETRIC:

Auto Ignition Temperature: 713 °C

Decomposition Temperature: 749 °C

Density:
- Bulk 2.30 g/cm^3
- Loading 2.8-3.8 g/cm^3

Fuel Oxidizer Ratio: 0.14:1

Gas Volume: 15 ml/g

Heat of Combustion: 649 cal/g

Heat of Reaction: 321 cal/g

STABILITY:

Hygroscopicity:
- 95 1.8 %
- 50 0.11 %

Thermal Stability:
- Loss in wt. 0 %
- Change in Configuration None

Vacuum Stability: 0.1 ml/gas/40hr

Weight Loss: 0.012 %

REFERENCE/NOTES:

AMCP706-179

SENSITIVITY:

Card Gap: No Detonation

Detonation: Burning

Electrical Spark: 3.125 Joules

Electrostatic:
- Minimum Concentration oz/ft^3
- Minimum Energy Joules

Friction:
- Steel Shoe No Reaction
- Fiber Shoe No Reaction
- Other

Ignition & Unconfined Burning:

	EXPLODED		BURN TIME	
Single Cube	Y	NX	4	Sec
Multiple Cube	Y	NX	5	Sec

Impact Sensitivity:

BoM		cm
PA		in
BoE	>15	in

OUTPUT:

Burn Time:

Density	2.3	g/cm^3	0.79 sec/cm
Density		g/cm^3	sec/cm
Density		g/cm^3	sec/cm

Critical Diameter: meter

Critical Height: cm

Pressure Time: psi/g

Time to Peak msec

High Explosive Equivalency:
- PA Method 0 %
- Free Air Pipe Bomb 0 %
- Closed Chamber %

USE: Fuze, Hand Grenade, 3-5 sec M201A1 (Modo)

APPLICATION: Time Delay used as First Time

STORAGE:

	NATO	DoD
Hazards Class (Q/D)	1.3	2
Compatibility		

NOMENCLATURE Red Lead/Silicon Delay Mixture IV (4)

COMPOSITION:

Ingredients	Parts by wt.
Silicon	10
Red Lead	90
Nitrocellulose/Acetone 10/90	1.8

DRAWING NUMBER: B143-12-3

PARAMETRIC:

Auto Ignition Temperature: 765 °C

Decomposition Temperature: 815 °C

Density: 2

Bulk 2.49 g/cm^3

Loading 2.8-3.8 g/cm^3

Fuel Oxidizer Ratio: 0.11:1

Gas Volume: 14 ml/g

Heat of Combustion: 605 cal/g

Heat of Reaction: 256 cal/g

STABILITY:

Hygroscopicity:

95 1.1%

50 0.01%

Thermal Stability:

Loss in wt. 0%

Change in Configuration

Vacuum Stability: 0.1 ml/gas/40hr

Weight Loss: 0.018 %

REFERENCE/NOTES:

AMCP706-179

SENSITIVITY:

Card Gap: No Detonation

Detonation: No Detonation

Electrical Spark: 3.125 Joules

Electrostatic:

Minimum Concentration oz/ft^3

Minimum Energy Joules

Friction:

Steel Shoe No Reaction

Fiber Shoe No Reaction

Other

Ignition & Unconfined Burning:

	EXPLODED		BURN TIME
Single Cube	Y	N X	3 Sec
Multiple Cube	Y	N X	4 Sec

Impact Sensitivity:

BoM cm

PA in

BoE in

OUTPUT:

Burn Time:

Density 2.49 g/cm^3 0.59 sec/cm

Density g/cm^3 sec/cm

Density g/cm^3 sec/cm

Critical Diameter: meter

Critical Height: cm

Pressure Time: psi/g

Time to Peak msec

High Explosive Equivalency:

PA Method 0 %

Free Air Pipe Bomb 0 %

Closed Chamber %

USE: Cluster Bomb, BE 750lb E153R1
Fuze, Bomb E50
Smoke Pot Floating, AN-M7A1
Smoke Pot Floating, AN-M7
~~Fuze, Generator Delay M22C~~

APPLICATION:

Delay used on First Fire

STORAGE:

	NATO	DoD
Hazards Class (Q/D)	1.3	2
Compatibility		

NOMENCLATURE Boron/Barium Chromate Delay Mixture T-10 (1)

COMPOSITION:

Ingredients	Parts by wt.
Barium Chromate	90
Boron	10

DRAWING NUMBER: (PA-DP906)

PARAMETRIC:

Auto Ignition Temperature: 615 °C

Decomposition Temperature: 700 °C

Density:
- Bulk 1.80 g/cm^3
- Loading 2.73 g/cm^3

Fuel Oxidizer Ratio: 0.11:1

Gas Volume: 3.1 ml/g

Heat of Combustion: 1073 cal/g

Heat of Reaction: 5.5 cal/g

STABILITY:

Hygroscopicity:
- 95 0.34 %
- 50 0.06 %

Thermal Stability:
- Loss in wt. 0 %
- Change in Configuration None

Vacuum Stability: ml/gas/40hr

Weight Loss: 0.08 %

REFERENCE/NOTES:

Ellern

SENSITIVITY:

Card Gap: No Detonation

Detonation: Complete Burning

Electrical Spark: 0.0023-0.0045 Joules

Electrostatic:
- Minimum Concentration oz/ft^3
- Minimum Energy Joules

Friction:
- Steel Shoe Complete Burning
- Fiber Shoe Complete Burning
- Other

Ignition & Unconfined Burning:

	EXPLODED		BURN TIME	
Single Cube	Y	N X	<2	Sec
Multiple Cube	Y	N X	<2	Sec

Impact Sensitivity:
- BoM 98 cm
- PA 12 in
- BoE in

OUTPUT:

Burn Time:
- Density 1.80 g/cm^3 0.197 sec/cm
- Density g/cm^3 0.35 sec/cm
- Density g/cm^3 0.276 sec/cm

Critical Diameter: meter

Critical Height: cm

Pressure Time: 44.4 psi/g

Time to Peak 1.2 msec

High Explosive Equivalency:
- PA Method < T %
- Free Air Pipe Bomb %
- Closed Chamber %

USE: M112 Photoflash Cartridge
M49A1 Trip Flare

APPLICATION: Second increment of fuze train

STORAGE:

	NATO	DoD
Hazards Class (Q/D)	1.1	7
Compatibility		

NOMENCLATURE Boron/Barium Chromate Delay Mixture T-10 (2)

COMPOSITION:

Ingredients	Parts by wt.
Boron	5
Barium Chromate	95

DRAWING NUMBER: (PA-DP587)

PARAMETRIC:

Auto Ignition Temperature: 553 °C

Decomposition Temperature: 630 °C

Density:
- Bulk 1.76 g/cm^3
- Loading 2.89 g/cm^3

Fuel Oxidizer Ratio: 0.05:1

Gas Volume: 4 ml/g

Heat of Combustion: 420 cal/g

Heat of Reaction: 265 cal/g

STABILITY:

Hygroscopicity:
- 95 6.05 %
- 50 0.09 %

Thermal Stability:
- Loss in wt. %
- Change in Configuration

Vacuum Stability: 0.06 ml/gas/40hr

Weight Loss: 0.09 %

REFERENCE/NOTES:

Ellern
Arnold & Pollard

SENSITIVITY:

Card Gap: No Detonation

Detonation: Complete Burning

Electrical Spark: 0.270 Joules

Electrostatic:
- Minimum Concentration oz/ft^3
- Minimum Energy Joules

Friction:
- Steel Shoe Complete Burning
- Fiber Shoe No Reaction
- Other

Ignition & Unconfined Burning:

	EXPLODED		BURN TIME	
Single Cube	Y	N X	<2	Sec
Multiple Cube	Y	N X	<2	Sec

Impact Sensitivity:
- BoM >100 cm
- PA >40 in
- BoE in

OUTPUT:

Burn Time:

Density	1.88	g/cm^3	0.48	sec/cm
Density	2.89	g/cm^3	0.98	sec/cm
Density		g/cm^3		sec/cm

Critical Diameter: meter

Critical Height: cm

Pressure Time: psi/g

Time to Peak msec

High Explosive Equivalency:
- PA Method %
- Free Air Pipe Bomb %
- Closed Chamber %

USE: M112 Fuze Housing

APPLICATION: First Fire Mixture

STORAGE:

	NATO	DoD
Hazards Class (Q/D)	1.1	7
Compatibility		

NOMENCLATURE Boron/Barium Chromate Delay Mixture (3)

COMPOSITION:

Ingredients	Parts by wt.
Barium Chromate	90
Boron	10
VAAR	1

DRAWING NUMBER: (PA-DP973)

PARAMETRIC:

Auto Ignition Temperature: 560 °C

Decomposition Temperature: 575 °C

Density:
- Bulk 1.12 g/cm^3
- Loading 1.95 g/cm^3

Fuel Oxidizer Ratio: 0.10 :1

Gas Volume: 29.5 ml/g

Heat of Combustion: 590 cal/g

Heat of Reaction: 463 cal/g

STABILITY:

Hygroscopicity:
- 95 0.37 %
- 50 0.37 %

Thermal Stability:
- Loss in wt. 0 %
- Change in Configuration None

Vacuum Stability: 0.07 ml/gas/40hr

Weight Loss: 0.014%

REFERENCE/NOTES:

PA TM2146
PA TM4981
PA 2212
EA-FR-2EOX

SENSITIVITY:

Card Gap: No Detonation

Detonation: Complete Burning

Electrical Spark: 0.025 Joules

Electrostatic:
- Minimum Concentration 0.72 oz/ft^3
- Minimum Energy 0.250 Joules

Friction:
- Steel Shoe Complete Burning
- Fiber Shoe No Reaction
- Other

Ignition & Unconfined Burning:

	EXPLODED		BURN TIME	
Single Cube	Y	NX	3	Sec
Multiple Cube	Y	NX	5	Sec

Impact Sensitivity:

BoM		cm
PA	24	in
BoE	15	in

OUTPUT:

Burn Time:

Density	1.12	g/cm^3	0.59	sec/cm
Density		g/cm^3		sec/cm
Density		g/cm^3		sec/cm

Critical Diameter: meter

Critical Height: cm

Pressure Time: 96 psi/g

Time to Peak 110 msec

High Explosive Equivalency:
- PA Method 0 %
- Free Air Pipe Bomb < 1 %
- Closed Chamber %

USE: M49A1 Trip Flare

APPLICATION: First Fire Composition

STORAGE:

	NATO	DoD
Hazards Class (Q/D)	1.1	7
Compatibility		

NOMENCLATURE Boron/Barium Chromate Delay Mixture (4)

COMPOSITION:

Ingredients	Parts by wt.
Boron	15
Barium Chromate	85

DRAWING NUMBER: (PA-DP523)

PARAMETRIC:

Auto Ignition Temperature: 706 °C

Decomposition Temperature: 736 °C

Density:
- Bulk 1.92 g/cm^3
- Loading 2.96 g/cm^3

Fuel Oxidizer Ratio: 0.18 :1

Gas Volume: 5 ml/g

Heat of Combustion: 846 cal/g

Heat of Reaction: 502 cal/g

STABILITY:

Hygroscopicity:
- 95 0.9 %
- 50 0.06 %

Thermal Stability:
- Loss in wt. 0 %
- Change in Configuration None

Vacuum Stability: ml/gas/40hr

Weight Loss: 0.04 %

REFERENCE/NOTES:

Carrazza & Kaye

SENSITIVITY:

Card Gap: No Detonation

Detonation: Complete Burning

Electrical Spark: Joules

Electrostatic:
- Minimum Concentration oz/ft^3
- Minimum Energy Joules

Friction:
- Steel Shoe Complete Burning
- Fiber Shoe No Reaction
- Other

Ignition & Unconfined Burning:

	EXPLODED		BURN TIME
Single Cube	Y	N X	3 Sec
Multiple Cube	Y	N X	5 Sec

Impact Sensitivity:
- BoM cm
- PA 26 in
- BoE 15 in

OUTPUT:

Burn Time:
- Density 0.92 g/cm^3 0.59 sec/cm
- Density g/cm^3 sec/cm
- Density g/cm^3 sec/cm

Critical Diameter: meter

Critical Height: cm

Pressure Time: psi/g

Time to Peak msec

High Explosive Equivalency:
- PA Method %
- Free Air Pipe Bomb %
- Closed Chamber %

USE:

APPLICATION:

STORAGE:

	NATO	DoD
Hazards Class (Q/D)	1.1	7
Compatibility		

NOMENCLATURE Boron/Barium Chromate Delay Mixture (5)

COMPOSITION:

Ingredients	Parts by wt.
Boron	19
Barium Chromate	81

DRAWING NUMBER: (PA-DP602)

PARAMETRIC:

Auto Ignition Temperature: 656 °C

Decomposition Temperature: 702 °C

Density:
- Bulk 1.9 g/cm^3
- Loading 2.95 g/cm^3

Fuel Oxidizer Ratio: 0.23:1

Gas Volume: 12 ml/g

Heat of Combustion: 763 cal/g

Heat of Reaction: 276 cal/g

STABILITY:

Hygroscopicity:
- 95 0.26 %
- 50 0.04 %

Thermal Stability:
- Loss in wt. 0 %
- Change in Configuration None

Vacuum Stability: 0.03 ml/gas/40hr

Weight Loss: 0.56%

REFERENCE/NOTES:

SENSITIVITY:

Card Gap: No Detonation

Detonation: Complete Burning

Electrical Spark: 0.025 Joules

Electrostatic:
- Minimum Concentration 0.72 oz/ft^3
- Minimum Energy 0.5 Joules

Friction:
- Steel Shoe Complete Burning
- Fiber Shoe No Reaction
- Other

Ignition & Unconfined Burning:

	EXPLODED			BURN TIME	
Single Cube	Y	N	X	4	Sec
Multiple Cube	Y	N	X	6	Sec

Impact Sensitivity:
- BoM cm
- PA 10 in
- BoE in

OUTPUT:

Burn Time:
- Density 1.9 g/cm^3 0.79 sec/cm
- Density g/cm^3 sec/cm
- Density g/cm^3 sec/cm

Critical Diameter: meter

Critical Height: cm

Pressure Time: psi/g
- Time to Peak msec

High Explosive Equivalency:
- PA Method %
- Free Air Pipe Bomb %
- Closed Chamber %

USE:

APPLICATION:

STORAGE:

	NATO	DoD
Hazards Class (Q/D)	1.1	7
Compatibility		

NOMENCLATURE Tungsten Delay Mixture (1)

COMPOSITION:

Ingredients	Parts by wt.
Tungsten	65
Barium Chromate	24
Potassium Perchlorate	10
VAAR	1

DRAWING NUMBER: 9269017/8836967

PARAMETRIC:

Auto Ignition Temperature: 370 °C

Decomposition Temperature: 421 °C

Density:
- Bulk g/cm^3
- Loading g/cm^3

Fuel Oxidizer Ratio: 1.91 :1

Gas Volume: 7 ml/g

Heat of Combustion: 840 cal/g

Heat of Reaction: 249 cal/g

STABILITY:

Hygroscopicity:
- 95 %
- 50 %

Thermal Stability:
- Loss in wt. 0 %
- Change in Configuration None

Vacuum Stability: 0.014 ml/gas/40hr

Weight Loss: %

REFERENCE/NOTES:

Taylor

SENSITIVITY:

Card Gap: No Detonation

Detonation: Sample Burned

Electrical Spark: 0.749 Joules

Electrostatic:
- Minimum Concentration oz/ft^3
- Minimum Energy Joules

Friction:
- Steel Shoe No Reaction
- Fiber Shoe No Reaction
- Other

Ignition & Unconfined Burning:

	EXPLODED		BURN TIME
Single Cube	Y	N X	Sec
Multiple Cube	Y	N X	Sec

Impact Sensitivity:
- BoM cm
- PA 33 in
- BoE in

OUTPUT:

Burn Time:
- Density g/cm^3 sec/cm
- Density g/cm^3 sec/cm
- Density g/cm^3 sec/cm

Critical Diameter: meter

Critical Height: cm

Pressure Time: 0 psi/g

- Time to Peak 125 msec

High Explosive Equivalency:
- PA Method %
- Free Air Pipe Bomb %
- Closed Chamber <1 %

USE: M49A1 Trip Flare

APPLICATION: Intermediate and first fire charge

STORAGE:

	NATO	DoD
Hazards Class (Q/D)	1.3	2
Compatibility	G	A

NOMENCLATURE Tungsten Delay Mixture (2)

COMPOSITION:

Ingredients	Parts by wt.
Tungsten	30
Barium Chromate	55
Potassium Perchlorate	10
Diatomaceous Earth	4
Viton	1

DRAWING NUMBER: WS12607

PARAMETRIC:

Auto Ignition Temperature: 391 °C

Decomposition Temperature: 414 °C

Density:
- Bulk g/cm^3
- Loading g/cm^3

Fuel Oxidizer Ratio: 0.46:1

Gas Volume: 5.8 ml/g

Heat of Combustion: 1187 cal/g

Heat of Reaction: cal/g

STABILITY:

Hygroscopicity:
- 95 %
- 50 %

Thermal Stability:
- Loss in wt. 0 %
- Change in Configuration None

Vacuum Stability: ml/gas/40hr

Weight Loss: %

REFERENCE/NOTES:

Encyclopedia of Explosives and Related Items, Volume 8

SENSITIVITY:

Card Gap: No Detonation

Detonation: Sample Burned

Electrical Spark: 0.5 Joules

Electrostatic:
- Minimum Concentration oz/ft^3
- Minimum Energy Joules

Friction:
- Steel Shoe No Reaction
- Fiber Shoe No Reaction
- Other

Ignition & Unconfined Burning:

	EXPLODED		BURN TIME
Single Cube	Y	N X	Sec
Multiple Cube	Y	N X	Sec

Impact Sensitivity:
- BoM cm
- PA 15 in
- BoE in

OUTPUT:

Burn Time: 0.8-6.2

Vented	Density g/cm^3	sec/cm
	Density g/cm^3	sec/cm
	Density g/cm^3	sec/cm

Critical Diameter: meter

Critical Height: cm

Pressure Time: psi/g

Time to Peak msec

High Explosive Equivalency:
- PA Method %
- Free Air Pipe Bomb %
- Closed Chamber %

USE: MK279 Mod 2 Igniter

APPLICATION: First Fire Mix

STORAGE:

	NATO	DoD
Hazards Class (Q/D)	1.3	2
Compatibility	G	A

COMPOSITION:

Ingredients	Parts by wt.
Tungsten	30
Barium Chromate	55
Potassium Perchlorate	10
Daitomaceous Earth	5

DRAWING NUMBER:

PARAMETRIC:

Auto Ignition Temperature: 388 °C

Decomposition Temperature: 433 °C

Density:
Bulk g/cm^3
Loading 4.88 g/cm^3

Fuel Oxidizer Ratio: 0.46 :1

Gas Volume: 6 ml/g

Heat of Combustion: 1080 cal/g

Heat of Reaction: cal/g

STABILITY:

Hygroscopicity:
95 %
50 %

Thermal Stability:
Loss in wt. 0 %
Change in Configuration None

Vacuum Stability: ml/gas/40hr

Weight Loss: %

REFERENCE/NOTES:
Temperature Coefficient, %/°K = 0.1
Delay Time Change on Storage, sec/year-cm
Sensitive to Moisture
Encyclopedia of Explosives and Related Items, Volume 8

SENSITIVITY:

Card Gap: No Detonation

Detonation: Sample Burned

Electrical Spark: 0.75 Joules

Electrostatic:
Minimum Concentration oz/ft^3
Minimum Energy Joules

Friction:
Steel Shoe No Reaction
Fiber Shoe No Reaction
Other

Ignition & Unconfined Burning:

	EXPLODED		BURN TIME
Single Cube	Y	N X	Sec
Multiple Cube	Y	N X	Sec

Impact Sensitivity:
BoM cm
PA >15 in
BoE in

OUTPUT:

Burn Time: 0.04-16
Density g/cm^3 sec/cm
Density g/cm^3 sec/cm
Density 4.88 g/cm^3 7.33 sec/cm

Critical Diameter: meter

Critical Height: cm

Pressure Time: psi/g
Time to Peak msec

High Explosive Equivalency:
PA Method %
Free Air Pipe Bomb %
Closed Chamber %

USE:

APPLICATION: First Fire

STORAGE:

	NATO	DoD
Hazards Class (Q/D)	1.3	2
Compatibility		

NOMENCLATURE Tungsten Delay Mixture (4)

COMPOSITION:

Ingredients	Parts by wt.
Tungsten	75
Postassium Perchlorate	10
Barium Chromate	10
Diatomaceous Earth	5

DRAWING NUMBER:

PARAMETRIC:

Auto Ignition Temperature: 445 °C

Decomposition Temperature: 516 °C

Density:

Bulk g/cm^3

Loading 4.88 g/cm^3

Fuel Oxidizer Ratio: 3.75:1

Gas Volume: 5.5 ml/g

Heat of Combustion: 840 cal/g

Heat of Reaction: 265 cal/g

STABILITY:

Hygroscopicity:

95 %

50 %

Thermal Stability:

Loss in wt. 0 %

Change in Configuration None

Vacuum Stability: ml/gas/40hr

Weight Loss: %

REFERENCE/NOTES:

SENSITIVITY:

Card Gap: No Detonation

Detonation: Sample Burned

Electrical Spark: 0.825 Joules

Electrostatic:

Minimum Concentration oz/ft^3

Minimum Energy Joules

Friction:

Steel Shoe No Reaction

Fiber Shoe No Reaction

Other

Ignition & Unconfined Burning:

	EXPLODED		BURN TIME
Single Cube	Y	N X	Sec
Multiple Cube	Y	N X	Sec

Impact Sensitivity:

BoM		cm
PA		in
BoE	15	in

OUTPUT:

Burn Time:

Density		g/cm^3	sec/cm
Density		g/cm^3	sec/cm
Density	4.88	g/cm^3	7.326 sec/cm

Critical Diameter: meter

Critical Height: cm

Pressure Time: psi/g

Time to Peak msec

High Explosive Equivalency:

PA Method %

Free Air Pipe Bomb %

Closed Chamber %

USE:

APPLICATION:

STORAGE:

	NATO	DoD
Hazards Class (Q/D)	1.3	2
Compatibility		

NOMENCLATURE Tungsten Delay Mixture (5)

COMPOSITION:

Ingredients	Parts by wt.
Tungsten	64
Potassium Chlorate	10
Dechlorane	15
VAAR	1

DRAWING NUMBER: (PA-DP1448)

PARAMETRIC:

Auto Ignition Temperature: 385 °C

Decomposition Temperature: 436 °C

Density:
- Bulk g/cm^3
- Loading g/cm^3

Fuel Oxidizer Ratio: 6.4:1

Gas Volume: 6.3 ml/g

Heat of Combustion: 765 cal/g

Heat of Reaction: 258 cal/g

STABILITY:

Hygroscopicity:
- 95 %
- 50 %

Thermal Stability:
- Loss in wt. 0 %
- Change in Configuration None

Vacuum Stability: ml/gas/40hr

Weight Loss: %

REFERENCE/NOTES:

SENSITIVITY:

Card Gap: No Detonation

Detonation: Sample Burned

Electrical Spark: 0.5 Joules

Electrostatic:
- Minimum Concentration oz/ft^3
- Minimum Energy Joules

Friction:
- Steel Shoe No Reaction
- Fiber Shoe No Reaction
- Other

Ignition & Unconfined Burning:

	EXPLODED		BURN TIME
Single Cube	Y	N X	Sec
Multiple Cube	Y	N X	Sec

Impact Sensitivity:
- BoM cm
- PA >15 in
- BoE in

OUTPUT:

Burn Time:
- Density g/cm^3 sec/cm
- Density g/cm^3 sec/cm
- Density g/cm^3 sec/cm

Critical Diameter: meter

Critical Height: cm

Pressure Time: psi/g
- Time to Peak msec

High Explosive Equivalency:
- PA Method %
- Free Air Pipe Bomb %
- Closed Chamber %

USE:

APPLICATION: Intermediate Charge, First Fire

STORAGE:

	NATO	DoD
Hazards Class (Q/D)	1.3	2
Compatibility		

NOMENCLATURE Tungsten Delay Mixture (6)

COMPOSITION:

Ingredients	Parts by wt.
Tungsten	50
Barium Chromate	40
Potassium Perchlorate	10

DRAWING NUMBER:

PARAMETRIC:

Auto Ignition Temperature: 270 °C

Decomposition Temperature: 305 °C

Density:
- Bulk g/cm^3
- Loading g/cm^3

Fuel Oxidizer Ratio: 1:1

Gas Volume: 4.3 ml/g

Heat of Combustion: 735 cal/g

Heat of Reaction: 233 cal/g

STABILITY:

Hygroscopicity:
- 95 %
- 50 %

Thermal Stability:
- Loss in wt. 0 %
- Change in Configuration None

Vacuum Stability: ml/gas/40hr

Weight Loss: %

REFERENCE/NOTES:

Pollard and Arnold

SENSITIVITY:

Card Gap: No Detonation

Detonation: Burning

Electrical Spark: 0.5 Joules

Electrostatic:
- Minimum Concentration oz/ft^3
- Minimum Energy Joules

Friction:
- Steel Shoe No Reaction
- Fiber Shoe No Reaction
- Other

Ignition & Unconfined Burning:

	EXPLODED		BURN TIME
Single Cube	Y	N X	Sec
Multiple Cube	Y	N X	Sec

Impact Sensitivity:
- BoM cm
- PA in
- BoE 22 in

OUTPUT:

Burn Time:
- Density g/cm^3 sec/cm
- Density g/cm^3 sec/cm
- Density g/cm^3 sec/cm

Critical Diameter: meter

Critical Height: cm

Pressure Time: psi/g
- Time to Peak msec

High Explosive Equivalency:
- PA Method %
- Free Air Pipe Bomb %
- Closed Chamber %

USE:

APPLICATION: First Fire Composition

STORAGE:

	NATO	DoD
Hazards Class (Q/D)	1.3	2
Compatibility		

COMPOSITION:

Ingredients	Parts by wt.
Tungsten	40
Barium Chromate	47
Potassium Perchlorate	13

DRAWING NUMBER:

PARAMETRIC:

Auto Ignition Temperature: 305 °C

Decomposition Temperature: 346 °C

Density:
- Bulk g/cm^3
- Loading g/cm^3

Fuel Oxidizer Ratio: 0.67:1

Gas Volume: 4.1 ml/g

Heat of Combustion: 712 cal/g

Heat of Reaction: 247 cal/g

STABILITY:

Hygroscopicity:
- 95 %
- 50 %

Thermal Stability:
- Loss in wt. 0 %
- Change in Configuration None

Vacuum Stability: ml/gas/40hr

Weight Loss: %

REFERENCE/NOTES:

Pollard and Arnold

SENSITIVITY:

Card Gap: No Detonation

Detonation: Sample Burned

Electrical Spark: 0.725 Joules

Electrostatic:
- Minimum Concentration oz/ft^3
- Minimum Energy Joules

Friction:
- Steel Shoe No Reaction
- Fiber Shoe No Reaction
- Other

Ignition & Unconfined Burning:

	EXPLODED		BURN TIME
Single Cube	Y	N X	Sec
Multiple Cube	Y	N X	Sec

Impact Sensitivity:
- BoM cm
- PA in
- BoE 18 in

OUTPUT:

Burn Time:
- Density g/cm^3 sec/cm
- Density g/cm^3 sec/cm
- Density g/cm^3 sec/cm

Critical Diameter: meter

Critical Height: cm

Pressure Time: psi/g
- Time to Peak msec

High Explosive Equivalency:
- PA Method %
- Free Air Pipe Bomb %
- Closed Chamber %

USE:

APPLICATION: Intermediate Charge

STORAGE:

	NATO	DoD
Hazards Class (Q/D)	1.3	2
Compatibility		

NOMENCLATURE Manganese/Barium Chromate Delay Mixture D16 (1)

COMPOSITION:

Ingredients	Parts by wt.
Manganese	29
Lead Chromate	26
Barium Chromate	45

DRAWING NUMBER: MIL Spec MIL-M-21383

PARAMETRIC:

Auto Ignition Temperature: 452 °C

Decomposition Temperature: 496 °C

Density:
- Bulk g/cm^3
- Loading g/cm^3

Fuel Oxidizer Ratio: 0.41 :1

Gas Volume: 12.6 ml/g

Heat of Combustion: 790 cal/g

Heat of Reaction: 258 cal/g

STABILITY:

Hygroscopicity:
- 95 2.92 %
- 50 0.56 %

Thermal Stability:
- Loss in wt. 0 %
- Change in Configuration None

Vacuum Stability: ml/gas/40hr

Weight Loss: %

REFERENCE/NOTES:

Encyclopedia of Explosives and Related Items, Volume 8

SENSITIVITY:

Card Gap: No Detonation

Detonation: Burning

Electrical Spark: 0.725 Joules

Electrostatic:
- Minimum Concentration oz/ft^3
- Minimum Energy Joules

Friction:
- Steel Shoe No Reaction
- Fiber Shoe No Reaction
- Other

Ignition & Unconfined Burning:

	EXPLODED		BURN TIME
Single Cube	Y	N X	Sec
Multiple Cube	Y	N X	Sec

Impact Sensitivity:

BoM		cm
PA		in
BoE	22	in

OUTPUT:

Burn Time: 0.8-5.4

Density	g/cm^3	sec/cm
Density	g/cm^3	sec/cm
Density	g/cm^3	sec/cm

Critical Diameter: meter

Critical Height: cm

Pressure Time: psi/g

Time to Peak msec

High Explosive Equivalency:
- PA Method %
- Free Air Pipe Bomb %
- Closed Chamber %

USE: MK4 Mod 0 Delay Cartridge

APPLICATION: First Fire Mix

STORAGE:

	NATO	DoD
Hazards Class (Q/D)	1.3	2
Compatibility		

NOMENCLATURE Manganese/Barium Chromate Delay Mixture D16 Type A (2)

COMPOSITION:

Ingredients	Parts by wt.
Manganese	45
Lead Chromate	55

DRAWING NUMBER:

PARAMETRIC:

Auto Ignition Temperature: 336 °C

Decomposition Temperature: 382 °C

Density:
- Bulk g/cm^3
- Loading g/cm^3

Fuel Oxidizer Ratio: 0.82:1

Gas Volume: 15.4 ml/g

Heat of Combustion: 745 cal/g

Heat of Reaction: 260 cal/g

STABILITY:

Hygroscopicity:
- 95 %
- 50 %

Thermal Stability:
- Loss in wt. 0 %
- Change in Configuration None

Vacuum Stability: ml/gas/40hr

Weight Loss: %

REFERENCE/NOTES:

Pollard and Arnold

SENSITIVITY:

Card Gap: No Detonation

Detonation: Sample Burned

Electrical Spark: 0.875 Joules

Electrostatic:
- Minimum Concentration oz/ft^3
- Minimum Energy Joules

Friction:
- Steel Shoe No Reaction
- Fiber Shoe No Reaction
- Other

Ignition & Unconfined Burning:

	EXPLODED		BURN TIME
Single Cube	Y	~~N~~	Sec
Multiple Cube	Y	~~N~~	Sec

Impact Sensitivity:
- BoM cm
- PA in
- BoE 18 in

OUTPUT:

Burn Time:
- Density g/cm^3 0.83 sec/cm
- Density g/cm^3 sec/cm
- Density g/cm^3 sec/cm

Critical Diameter: meter

Critical Height: cm

Pressure Time: psi/g
- Time to Peak msec

High Explosive Equivalency:
- PA Method %
- Free Air Pipe Bomb %
- Closed Chamber %

USE:

APPLICATION: First Fire

STORAGE:

	NATO	DoD
Hazards Class (Q/D)	1.3	2
Compatibility		

NOMENCLATURE Manganese/Barium Chromate Delay Mixture, D16 Type B(3)

COMPOSITION:

Ingredients	Parts by wt.
Manganese, Grad I	33
Barium Chromate	30
Lead Chromate	37

DRAWING NUMBER:

PARAMETRIC:

Auto Ignition Temperature: 460 °C

Decomposition Temperature: 522 °C

Density:
- Bulk g/cm^3
- Loading g/cm^3

Fuel Oxidizer Ratio: 0.49:1

Gas Volume: 18.3 ml/g

Heat of Combustion: 851 cal/g

Heat of Reaction: 256 cal/g

STABILITY:

Hygroscopicity:
- 95 3.56 %
- 50 0.08 %

Thermal Stability:
- Loss in wt. 0 %
- Change in Configuration None

Vacuum Stability: ml/gas/40hr

Weight Loss: %

REFERENCE/NOTES:

Pollard and Arnold
Ellern

SENSITIVITY:

Card Gap: No Detonation

Detonation: Sample Burned

Electrical Spark: 1.125 Joules

Electrostatic:
- Minimum Concentration oz/ft^3
- Minimum Energy Joules

Friction:
- Steel Shoe No Reaction
- Fiber Shoe No Reaction
- Other

Ignition & Unconfined Burning:

	EXPLODED		BURN TIME
Single Cube	Y	N X	Sec
Multiple Cube	Y	N X	Sec

Impact Sensitivity:
- BoM cm
- PA in
- BoE 15 in

OUTPUT:

Burn Time:
- Density g/cm^3 3.31 sec/cm
- Density g/cm^3 sec/cm
- Density g/cm^3 sec/cm

Critical Diameter: meter

Critical Height: cm

Pressure Time: psi/g
- Time to Peak msec

High Explosive Equivalency:
- PA Method %
- Free Air Pipe Bomb %
- Closed Chamber %

USE:

APPLICATION:

STORAGE:

	NATO	DoD
Hazards Class (Q/D)	1.3	2
Compatibility		

NOMENCLATURE Manganese/Barium Chromate Delay Mixture, D16 Type C (4)

COMPOSITION:

Ingredients	Parts by wt.
Manganese	32.8
Barium Chromate	37
Lead Chromate	30.2

DRAWING NUMBER:

PARAMETRIC:

Auto Ignition Temperature: 420 °C

Decomposition Temperature: 478 °C

Density:
- Bulk g/cm^3
- Loading g/cm^3

Fuel Oxidizer Ratio: 0.49:1

Gas Volume: 11.4 ml/g

Heat of Combustion: 830 cal/g

Heat of Reaction: 262 cal/g

STABILITY:

Hygroscopicity:
- 95 %
- 50 %

Thermal Stability:
- Loss in wt. %
- Change in Configuration

Vacuum Stability: ml/gas/40hr

Weight Loss: %

REFERENCE/NOTES:

Pollard and Arnold

SENSITIVITY:

Card Gap: No Detonation

Detonation: Burning

Electrical Spark: 0.6 Joules

Electrostatic:
- Minimum Concentration oz/ft^3
- Minimum Energy Joules

Friction:
- Steel Shoe No Reaction
- Fiber Shoe No Reaction
- Other

Ignition & Unconfined Burning:

	EXPLODED		BURN TIME
Single Cube	Y	N X	Sec
Multiple Cube	Y	N X	Sec

Impact Sensitivity:
- BoM cm
- PA in
- BoE 15 in

OUTPUT:

Burn Time:
- Density g/cm^3 5.31 sec/cm
- Density g/cm^3 sec/cm
- Density g/cm^3 sec/cm

Critical Diameter: meter

Critical Height: cm

Pressure Time: psi/g
- Time to Peak msec

High Explosive Equivalency:
- PA Method %
- Free Air Pipe Bomb %
- Closed Chamber %

USE:

APPLICATION: First Fire

STORAGE:

	NATO	DoD
Hazards Class (Q/D)	1.3	2
Compatibility		

NOMENCLATURE Zirconium-Nickel/Barium Chromate Delay Mixture (1)

COMPOSITION:

Ingredients	Parts by wt.
Zirconium	21
Barium Chromate	79

DRAWING NUMBER: (PA-DP162)

PARAMETRIC:

Auto Ignition Temperature: 418 °C

Decomposition Temperature: 476 °C

Density:
- Bulk g/cm^3
- Loading g/cm^3

Fuel Oxidizer Ratio: 0.27:1

Gas Volume: ml/g

Heat of Combustion: 426 cal/g

Heat of Reaction: 396 cal/g

STABILITY:

Hygroscopicity:
- 95 0.09 %
- 50 0.03 %

Thermal Stability:
- Loss in wt. 0 %
- Change in Configuration None

Vacuum Stability: ml/gas/40hr

Weight Loss: %

REFERENCE/NOTES:

P. L. Farnell & J. Beardell

SENSITIVITY:

Card Gap: No Detonation

Detonation: Complete Burn

Electrical Spark: 0.0013 Joules

Electrostatic:
- Minimum Concentration oz/ft^3
- Minimum Energy Joules

Friction:
- Steel Shoe Partial Burn
- Fiber Shoe No Reaction
- Other

Ignition & Unconfined Burning:

	EXPLODED		BURN TIME	
Single Cube	Y	N X	<2	Sec
Multiple Cube	Y	N X	<2	Sec

Impact Sensitivity:

BoM		cm
PA	23	in
BoE	10	in

OUTPUT:

Burn Time:

Density	g/cm^3	<0.4	sec/cm
Density	g/cm^3		sec/cm
Density	g/cm^3		sec/cm

Critical Diameter: meter

Critical Height: cm

Pressure Time: 4.2 psi/g

Time to Peak 150 msec

High Explosive Equivalency:
- PA Method %
- Free Air Pipe Bomb %
- Closed Chamber 0 %

USE:

APPLICATION:

STORAGE:

	NATO	DoD
Hazards Class (Q/D)	1.1	7
Compatibility		

NOMENCLATURE Zirconium-Nickel/Barium Chromate Delay Mixture (2)

COMPOSITION:

Ingredients	Parts by wt.
Barium Chromate	60
Potassium Perchlorate	14
Zirconium/Nickel (30/70)	26

DRAWING NUMBER: (PA-DP1415)

PARAMETRIC:

Auto Ignition Temperature: 325 °C

Decomposition Temperature: 370 °C

Density:
- Bulk g/cm^3
- Loading g/cm^3

Fuel Oxidizer Ratio: 0.35:1

Gas Volume: 13 ml/g

Heat of Combustion: 571 cal/g

Heat of Reaction: 521 cal/g

STABILITY:

Hygroscopicity:
- 95 0.1 %
- 50 0.01 %

Thermal Stability:
- Loss in wt. 0 %
- Change in Configuration None

Vacuum Stability: 0.11 ml/gas/40hr

Weight Loss: %

REFERENCE/NOTES:

Ellern

SENSITIVITY:

Card Gap: No Detonation

Detonation: Complete Burning

Electrical Spark: 0.725 Joules

Electrostatic:
- Minimum Concentration oz/ft^3
- Minimum Energy Joules

Friction:
- Steel Shoe Complete Burn
- Fiber Shoe
- Other

Ignition & Unconfined Burning:

	EXPLODED		BURN TIME
Single Cube	Y	N X	2 Sec
Multiple Cube	Y	N X	2 Sec

Impact Sensitivity:
- BoM 56 cm
- PA >40 in
- BoE 22 in

OUTPUT:

Burn Time:
- Density g/cm^3 0.37 sec/cm
- Density g/cm^3 sec/cm
- Density g/cm^3 0.78 sec/cm

Critical Diameter: meter

Critical Height: cm

Pressure Time: psi/g

Time to Peak 5.1 msec

High Explosive Equivalency: 130
- PA Method %
- Free Air Pipe Bomb %
- Closed Chamber <1 %

USE: Grenade Fuze Navy MK18
Cable Cutter Cartridge
20 Sec Cargo Release Cartridge

APPLICATION:

STORAGE:

	NATO	DoD
Hazards Class (Q/D)	1.3	2
Compatibility		

NOMENCLATURE Zirconium-Nickel/Barium Chromate Delay Mixture (3)

COMPOSITION:

Ingredients	Parts by wt.
Zirconium/Nickel Alloy (70/30)	54
Barium Chromate	31
Potassium Perchlorate	15

DRAWING NUMBER:

PARAMETRIC:

Auto Ignition Temperature: 335 °C

Decomposition Temperature: 407 °C

Density:
- Bulk g/cm^3
- Loading g/cm^3

Fuel Oxidizer Ratio: 1.17:1

Gas Volume: 9 ml/g

Heat of Combustion: 407 cal/g

Heat of Reaction: 327 cal/g

STABILITY:

Hygroscopicity:
- 95 1.8 %
- 50 0.07 %

Thermal Stability:
- Loss in wt. 0 %
- Change in Configuration None

Vacuum Stability: 0.2 ml/gas/40hr

Weight Loss: %

REFERENCE/NOTES:

Pollard and Arnold
Ellern

SENSITIVITY:

Card Gap: No Detonation

Detonation: Burning

Electrical Spark: 0.05 Joules

Electrostatic:
- Minimum Concentration oz/ft^3
- Minimum Energy Joules

Friction:
- Steel Shoe Slight/No Reaction
- Fiber Shoe No Reaction
- Other

Ignition & Unconfined Burning:

	EXPLODED		BURN TIME
Single Cube	Y	NX	Sec
Multiple Cube	Y	NX	Sec

Impact Sensitivity:
- BoM 100 cm
- PA 40 in
- BoE 24 in

OUTPUT:

Burn Time:
- Density g/cm^3 sec/cm
- Density g/cm^3 sec/cm
- Density g/cm^3 1.0 sec/cm

Critical Diameter: meter

Critical Height: cm

Pressure Time: psi/g

Time to Peak msec

High Explosive Equivalency:
- PA Method %
- Free Air Pipe Bomb %
- Closed Chamber %

USE: M112 Delay Element

APPLICATION: Gasless Delay Column

STORAGE: NATO DoD

Hazards Class (Q/D)

Compatibility

NOMENCLATURE Zirconium-Nickel/Barium Chromate Delay Mixture (4)

COMPOSITION:

Ingredients	Parts by wt.
Barium Chromate	80
Zirconium/Nickel Alloy (50/50)	20

DRAWING NUMBER:

PARAMETRIC:

Auto Ignition Temperature: 351 °C

Decomposition Temperature: 396 °C

Density:
Bulk g/cm^3
Loading g/cm^3

Fuel Oxidizer Ratio: 0.25:1

Gas Volume: 0.8 ml/g

Heat of Combustion: cal/g

Heat of Reaction: 190 cal/g

STABILITY:

Hygroscopicity:
95 0.9 %
50 0.06 %

Thermal Stability:
Loss in wt. 0 %
Change in Configuration None

Vacuum Stability: 0.16 ml/gas/40hr

Weight Loss: %

REFERENCE/NOTES:

Pollard and Arnold

SENSITIVITY:

Card Gap: No Detonation

Detonation: Burning

Electrical Spark: 0.025 Joules

Electrostatic:
Minimum Concentration oz/ft^3
Minimum Energy Joules

Friction:
Steel Shoe Burning
Fiber Shoe No Reaction
Other

Ignition & Unconfined Burning:

	EXPLODED		BURN TIME
Single Cube	Y	NX	Sec
Multiple Cube	Y	NX	Sec

Impact Sensitivity:
BoM cm
PA in
BoE 18 in

OUTPUT:

Burn Time:
Density g/cm^3 sec/cm
Density g/cm^3 sec/cm
Density g/cm^3 sec/cm

Critical Diameter: meter

Critical Height: cm

Pressure Time: psi/g

Time to Peak msec

High Explosive Equivalency:
PA Method %
Free Air Pipe Bomb %
Closed Chamber %

USE:

APPLICATION:

STORAGE: NATO DoD
Hazards Class (Q/D)
Compatibility

NOMENCLATURE Zirconium-Nickel/Barium Chromate Delay Mixture (5)

COMPOSITION:

Ingredients	Parts by wt.
Barium Chromate	75
Zirconium/Nickel (50/50)	20
Potassium Perchlorate	5

DRAWING NUMBER:

PARAMETRIC:

Auto Ignition Temperature: °C

Decomposition Temperature: °C

Density:

Bulk g/cm^3

Loading g/cm^3

Fuel Oxidizer Ratio: 0.25:1

Gas Volume: 1.4 ml/g

Heat of Combustion: 396 cal/g

Heat of Reaction: 225 cal/g

STABILITY:

Hygroscopicity:

95 0.54 %

50 0.1 %

Thermal Stability:

Loss in wt. 0 %

Change in Configuration None

Vacuum Stability: 0.16 ml/gas/40hr

Weight Loss: %

REFERENCE/NOTES:

Pollard and Arnold

SENSITIVITY:

Card Gap: No Detonation

Detonation: Burning

Electrical Spark: 0.05 Joules

Electrostatic:

Minimum Concentration oz/ft^3

Minimum Energy Joules

Friction:

Steel Shoe Partial Burn

Fiber Shoe No Reaction

Other

Ignition & Unconfined Burning:

	EXPLODED		BURN TIME
Single Cube	Y	N X	Sec
Multiple Cube	Y	N X	Sec

Impact Sensitivity:

BoM		cm
PA		in
BoE	22	in

OUTPUT:

Burn Time:

Density	g/cm^3	sec/cm
Density	g/cm^3	sec/cm
Density	g/cm^3	sec/cm

Critical Diameter: meter

Critical Height: cm

Pressure Time: psi/g

Time to Peak msec

High Explosive Equivalency:

PA Method %

Free Air Pipe Bomb %

Closed Chamber %

USE:

APPLICATION:

STORAGE:

	NATO	DoD
Hazards Class (Q/D)		
Compatibility		

NOMENCLATURE Zirconium-Nickel/Barium Chromate Delay Mixture (6)

COMPOSITION:

Ingredients	Parts by wt.
Barium Chromate	83
Zirconium/Nickel Alloy (50/50)	17

DRAWING NUMBER:

PARAMETRIC:

Auto Ignition Temperature: °C

Decomposition Temperature: °C

Density:
- Bulk g/cm^3
- Loading g/cm^3

Fuel Oxidizer Ratio: 0.2 :1

Gas Volume: ml/g

Heat of Combustion: 388 cal/g

Heat of Reaction: 169 cal/g

STABILITY:

Hygroscopicity:
- 95 0.75 %
- 50 0.06 %

Thermal Stability:
- Loss in wt. 0 %
- Change in Configuration None

Vacuum Stability: 0.11 ml/gas/40hr

Weight Loss: %

REFERENCE/NOTES:

Pollard and Arnold

SENSITIVITY:

Card Gap: No Detonation

Detonation: Burning

Electrical Spark: 0.05 Joules

Electrostatic:
- Minimum Concentration oz/ft^3
- Minimum Energy Joules

Friction:
- Steel Shoe Partial Burn
- Fiber Shoe No Reaction
- Other

Ignition & Unconfined Burning:

	EXPLODED		BURN TIME
Single Cube	Y	N X	Sec
Multiple Cube	Y	N X	Sec

Impact Sensitivity:
- BoM cm
- PA in
- BoE 19 in

OUTPUT:

Burn Time:
- Density g/cm^3 sec/cm
- Density g/cm^3 sec/cm
- Density g/cm^3 sec/cm

Critical Diameter: meter

Critical Height: cm

Pressure Time: psi/g

Time to Peak msec

High Explosive Equivalency:
- PA Method %
- Free Air Pipe Bomb %
- Closed Chamber %

USE:

APPLICATION:

STORAGE:

	NATO	DoD
Hazards Class (Q/D)		
Compatibility		

NOMENCLATURE Zirconium-Nickel/Barium Chromate Delay Mixture (7)

COMPOSITION:

Ingredients	Parts by wt.
Barium Chromate	80
Zirconium/Nickel Alloy (50/50)	17
Potassium Perchlorate	3

DRAWING NUMBER:

PARAMETRIC:

Auto Ignition Temperature: 407 °C

Decomposition Temperature: 426 °C

Density:
- Bulk g/cm^3
- Loading g/cm^3

Fuel Oxidizer Ratio: 0.2:1

Gas Volume: 0.7 ml/g

Heat of Combustion: cal/g

Heat of Reaction: 200 cal/g

STABILITY:

Hygroscopicity:
- 95 0.65 %
- 50 0.04 %

Thermal Stability:
- Loss in wt. %
- Change in Configuration

Vacuum Stability: 0.16 ml/gas/40hr

Weight Loss: %

REFERENCE/NOTES:

Pollard and Arnold

SENSITIVITY:

Card Gap: No Detonation

Detonation: Burning

Electrical Spark: 0.025 Joules

Electrostatic:
- Minimum Concentration oz/ft^3
- Minimum Energy Joules

Friction:
- Steel Shoe No Reaction
- Fiber Shoe No Reaction
- Other

Ignition & Unconfined Burning:

	EXPLODED		BURN TIME
Single Cube	Y	NX	Sec
Multiple Cube	Y	NX	Sec

Impact Sensitivity:

BoM		cm
PA		in
BoE	22	in

OUTPUT:

Burn Time:

Density	g/cm^3		sec/cm
Density	g/cm^3		sec/cm
Density	g/cm^3	6.1	sec/cm

Critical Diameter: meter

Critical Height: cm

Pressure Time: psi/g

Time to Peak msec

High Explosive Equivalency:
- PA Method %
- Free Air Pipe Bomb %
- Closed Chamber %

USE:

APPLICATION:

STORAGE: NATO DoD

Hazards Class (Q/D)

Compatibility

NOMENCLATURE Zirconium-Nickel Alloy/Barium Chromate Delay Mixture (8)

COMPOSITION:

Ingredients	Parts by wt.
Zirconium-Nickel Alloy 50/50	23
Barium Chromate	77

DRAWING NUMBER:

PARAMETRIC:

Auto Ignition Temperature: 375 °C

Decomposition Temperature: 401 °C

Density:
- Bulk g/cm^3
- Loading g/cm^3

Fuel Oxidizer Ratio: 0.29 :1

Gas Volume: 1 ml/g

Heat of Combustion: 419 cal/g

Heat of Reaction: 202 cal/g

STABILITY:

Hygroscopicity:
- 95 0.89 %
- 50 0.056 %

Thermal Stability:
- Loss in wt. 0 %
- Change in Configuration None

Vacuum Stability: 0.19 ml/gas/40hr

Weight Loss: %

REFERENCE/NOTES:

Pollard and Arnold

SENSITIVITY:

Card Gap: No Detonation

Detonation: Burning

Electrical Spark: 0.025 Joules

Electrostatic:
- Minimum Concentration oz/ft^3
- Minimum Energy Joules

Friction:
- Steel Shoe Partial Burn
- Fiber Shoe No Reaction
- Other

Ignition & Unconfined Burning:

	EXPLODED		BURN TIME
Single Cube	Y	NX	Sec
Multiple Cube	Y	NX	Sec

Impact Sensitivity:
- BoM cm
- PA 16 in
- BoE in

OUTPUT:

Burn Time:
- Density g/cm^3 sec/cm
- Density g/cm^3 sec/cm
- Density g/cm^3 sec/cm

Critical Diameter: meter

Critical Height: cm

Pressure Time: psi/g

Time to Peak msec

High Explosive Equivalency:
- PA Method %
- Free Air Pipe Bomb %
- Closed Chamber %

USE:

APPLICATION:

STORAGE:

	NATO	DoD
Hazards Class (Q/D)		
Compatibility	1.3	2

DISTRIBUTION LIST

Commander
U.S. Army Armament R&D Command
ATTN: DRDAR-CG
DRDAR-LC
DRDAR-LCM
DRDAR-LCM-S (12)
DRDAR-SF
DRDAR-TSS (5)
DRDAR-LCU-P
Dover, NJ 07801

Commander
U.S. Army Materiel Development and
Readiness Command
ATTN: DRCDE
DRCIS-E
DRCPA-E
DRCPP-I
DRCDI
DRCSG-S
5001 Eisenhower Avenue
Alexandria, VA 22333

Commander
USDRC Installations & Services Agency
ATTN: DRCIS-RI-IU
DRCIS-RI-IC
Rock Island, IL 61299

Commander
U.S. Army Armament Materiel
Readiness Command
ATTN: DRSAR-LEP-L
DRSAR-IR
DRSAR-IRC
DRSAR-ISE
DRSAR-IRC-E
DRSAR-PDM
DRSAR-LC
DRSAR-ASF
DRSAR-SF (2)
Rock Island, IL 61299

Chairman
DoD Explosives Safety Board
Hoffman Bldg. 1, Room 856C (Dr. T. Zaker)
2461 Eisenhower Avenue
Alexandria, VA 22331

Commander
U.S. Army Munitions Production
Base Modernization Agency
ATTN: SARPM-PBM-EP
SARPM-PBM-LA
SARPM-PBM-T-SF
Dover, NJ 07801

Director
Ballistic Research Laboratory
ARRADCOM
ATTN: DRDAR-BLE (C. Kingery)
Aberdeen Proving Ground, MD 21010

Defense Technical Information Center
Cameron Station (12)
Alexandria, VA 22314

Commander
U.S. Army Construction Engineering
Research Laboratory
ATTN: DERL-ER
Champaign, IL 61820

Office, Chief of Engineers
ATTN: DAEN-MCZ-E
Washington, DC 20314

U.S. Army Engineer District, Huntsville
ATTN: Construction Division-HAD-ED
P.O. Box 1600 West Station
Huntsville, AL 35807

Commander
Indiana Army Ammunition Plant
ATTN: SARIN-SF
Charlestown, IN 47111

Commander
Kansas Army Ammunition Plant
ATTN: SARKA-CE
Parsons, KS 67537

DISTRIBUTION LIST (Continued)

Commander
Lone Star Army Ammunition Plant
ATTN: SARMI-S
Baraboo, WI 53913

Commander
Holston Army Ammunition Plant
ATTN: SARHO-E
Kingsport, TN 37662

Commander
Iowa Army Ammunition Plant
ATTN: SARIO-A
Middletown, IA 52638

Commander
Longhorn Army Ammunition Plant
ATTN: SARLO-O (5)
Marshall, TX 75670

Technical Library
ATTN: DRDAR-CLJ-L
APG, Edgewood Area, MD 21010

Director
U.S. Army Ballistic Resch Laboratory
ARRADCOM
ATTN: DRDAR-TSB-S
Aberdeen Proving Ground, MD 21005

Benet Weapons Laboratory
Technical Library
ATTN: DRDAR-LCB-TL
Watervliet, NY 12189