April 2009

Design Guides for Plastics

Clive Maier, Econology Ltd

TANGRAM TECHNOLOGY

ENABLERS econology IN PLASTICS

This publication is made up of a series of articles published in Plastics and Rubber Weekly as a piece work. The kind assistance of the author and PRW is acknowledged in the publication of the work.
The publication will be updated in a regular basis as new sections of the guide are published by PRW.

The design hints in this booklet are given in good faith and represent current good practice. The short nature of the hints means that not all information can be included. No responsibility can be taken for any errors or consequential damages resulting from using these hints.

This publication may be freely reproduced except for sale or advertising purposes. It may be hosted on web sites for free downloading providing that it is used in it's entirety and that reference is made to the original publication.

© Clive Maier 2004

Typeset by Tangram Technology Ltd.

Contents

Preface 1

Introduction 2

Injection moulding 4

Basics

1. Wall thickness 5
2. Corners 6
3. Ribs 7
4. Bosses 10
5. Design for recycling 13

Special features

6. Living hinge 18
7. Bearings 20
8. Gears 23

Assembly

9. Press fits 28
10. Snap-fits 29
11. Hot air staking 33
12. Ultrasonic welding 38
13. Hot plate welding 40
14. Spin welding 41
15. Friction welding 42
16. Induction welding 43
17. Laser welding 44
18. Adhesive and solvent bonding 45

Special techniques

19. Design for outsert moulding 50
20. Design for gas assist injection moulding ..... Planned

Extrusion .....

21. Design for profile extrusion ..... Planned

Blow moulding .....

22. Design for extrusion blow moulding ..... Planned

Thermoforming .....

23. Design for thermoforming ..... Planned

Design information

24. Design information sources 63

Preface

This set of hints and tips for plastics product designers is intended as a source book and an 'aide mémoire' for good design ideas and practices. It is a source book for plastics product designers at all levels but it is primarily aimed at:

- student designers carrying out design work for all levels of academic studies;
- non-plastics specialists involved in the design of plastics products;
- plastics specialists who need to explain their design decisions and the design limitations to non-plastics specialists.

The book covers each topic in a single page to provide a basic reference to each topic. This space constraint means that each topic is only covered to a basic level. Detailed plastic product design will always require detailed knowledge of the application, the processing method and the selected plastic. This information can only be provided by raw materials suppliers, specialist plastics product designers and plastics processors but there is a need to get the basics of the product design right in the first instance.

Using the hints and tips provided in this guide will enable designers to reduce initial errors and will lead to better and more economic design with plastics.

I hope this short work will improve the basic design of plastics products and if it can do this then it will have served it’s objectives.

Clive Maier
ECONOLOGY Ltd.

INTRODUCTION

Good design is important for any manufactured product but for plastics it is absolutely vital. We have no instinct for plastics. Most of those we use today have been around for little more than two generations. Compare that with the thousands of years of experience we have with metals. And plastics are more varied, more complicated. For most designs in metals, there is no need to worry about the effects of time, temperature or environment. It is a different story for plastics. They creep and shrink as time passes; their properties change over the temperature range of everyday life; they may be affected by common household and industrial materials.

The philosopher Heidegger defined technology as a way of arranging the world so that one does not have to experience it. We can extend his thought to define design as a way of arranging technology so that we do not have to experience it. In other words, good design delivers function, form and technology in objects that meet the needs of users without making demands on them. The well-designed object gives pleasure or at least satisfaction in use, and does what it should do without undue concern.

In these Design Guides we will set out the basics of good design for plastics. The rules and recommendations we give will necessarily be generalisations. They will apply often but not invariably to thermoplastics, frequently but not exclusively to injection moulding. The basic advice will be good but because plastics are so complex and varied the golden rule must always be to consider carefully whether the advice needs adjusting to suit your particular application.

Good design combines concept with embodiment. Unless the two are considered together, the result will be an article that cannot be made economically or one that fails in use. This is particularly important for plastics. It is vital to choose the right material for the job. When that is done, it is equally important to adapt the details of the design to suit the characteristics of the material and the limitations of the production process.

Plastics come in a bewildering variety. There are a hundred or more distinct generic types. On top of that, advanced techniques with catalysts and compounding are creating new alloys, blends and molecular forms. All of these materials can have their properties

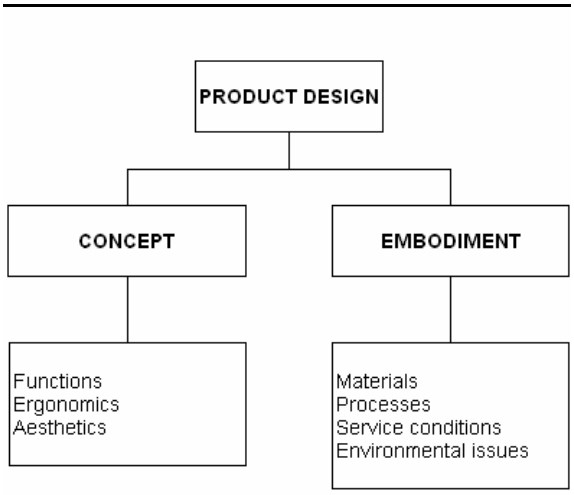

DESIGN CONSIDERATIONS

modified by control of molecular weight and by additives such as reinforcements. The number of different grades of plastics materials available to the designer now approaches 50,000. The importance - and the difficulty - of making the right choice is obvious.

Plastics can be grouped into categories that have roughly similar behaviour. Thermoplastics undergo a physical change when processed; the process is repeatable. Thermosets undergo a chemical change; the process is irreversible. A key distinction between thermoplastics relates to the molecular arrangement. Those with random tangled molecules are called amorphous. Those with a degree of molecular arrangement and ordering are called semi-crystalline. The difference is significant. For example, most amorphous materials can be fully transparent. And the more crystalline a material is, the less likely it is to have a wide 'rubbery' processing region, so making it less suitable for stretching processes like blow moulding and thermoforming

Designers must design for process as well as purpose and material. In single-surface processes for example, there is only indirect control over the form of the second surface. Design must take this limitation into account.

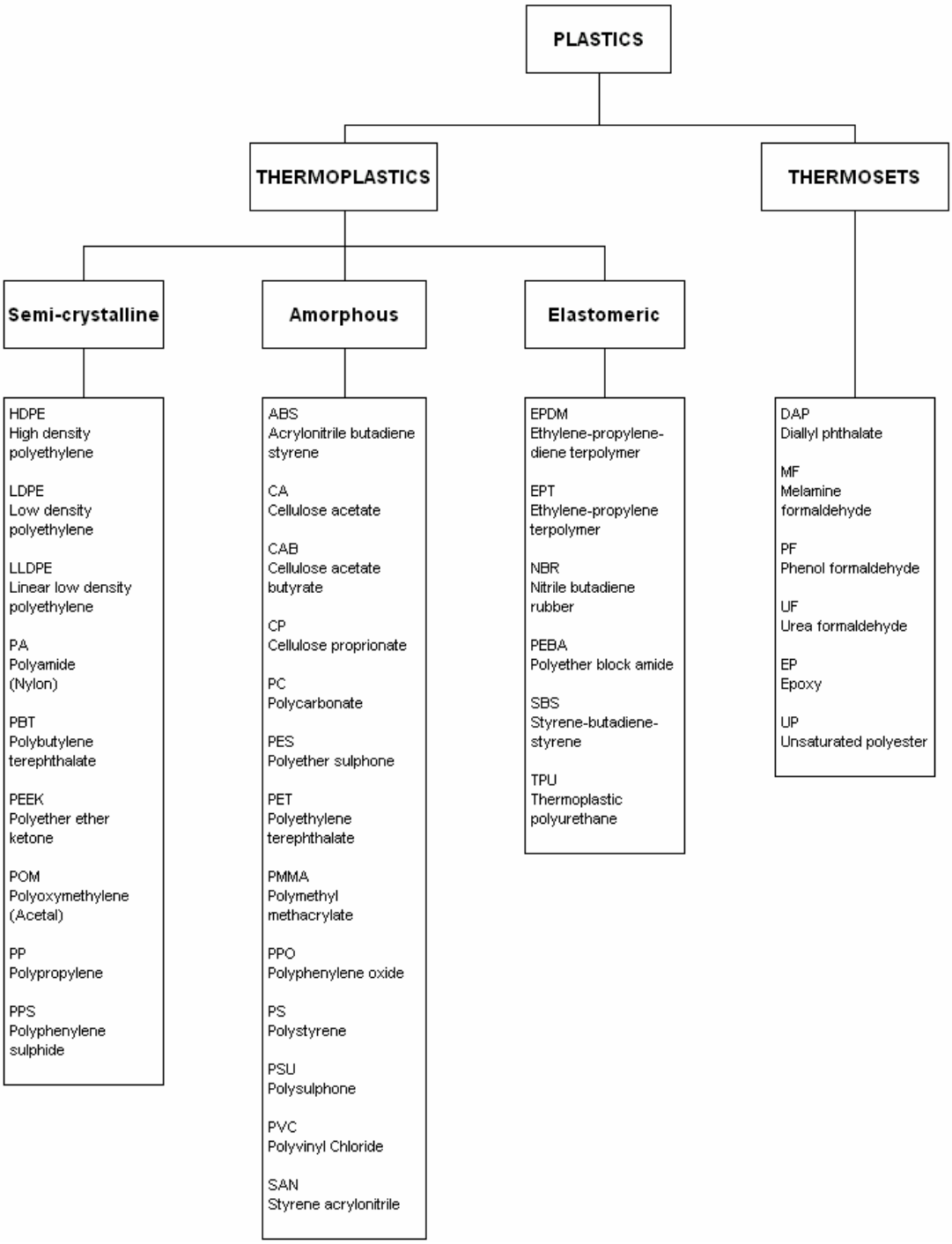

SOME COMMON PLASTICS

	ALL SURFACES DEFINED	SINGLE SURFACE DEFINED
BATCH PROCESS	Injection moulding Compression moulding Transfer moulding	Blow moulding Thermoforming Rotational moulding
CONTINUOUS PROCESS	Extrusion Calendering Pultrusion	

COMMON PLASTICS FORMING PROCESSES

Part 1

Injection moulding

1 WALL THICKNESS

Parts that might be made as solid shapes in traditional materials must be formed quite differently in plastics. Moulded plastics do not lend themselves to solid forms. There are two principal reasons for this. First, plastics are processed with heat but are poor conductors of heat. This means that thick sections take a very long time to cool and so are costly to make. The problems posed by shrinkage are equally severe. During cooling, plastics undergo a volume reduction. In thick sections, this either causes the surface of the part to cave in to form an unsightly sink mark, or produces an internal void. Furthermore, plastics materials are expensive; it is only high-speed production methods and net-shape forming that make mouldings viable. Thick sections waste material and are simply uneconomic.

So solid shapes that would do the job well in wood or metal must be transformed to a 'shell' form in plastics. This is done by hollowing out or 'coring' thick parts so you are left with a component which regardless of complexity is composed essentially of relatively thin walls joined by curves, angles, corners, ribs, steps and offsets. As far as possible, all these walls should be the same thickness.

It is not easy to generalise what the wall thickness should be. The wall plays a part both in design concept and embodiment. The wall must be thick enough to do its job; it must be strong enough or stiff enough or cheap enough. But it must also be thin enough to cool quickly and thick enough to allow efficient mould filling. If the material is inherently strong or stiff the wall can be thinner. As a general guide, wall thicknesses for reinforced materials should be 0.75 mm to 3 mm, and those for unfilled materials should be 0.5 mm to 5 mm.

Ideally, the entire component should be a uniform thickness - the nominal wall thickness. In practice that is often not possible; there must be some variation in thickness to accommodate functions or aesthetics. It is very important to keep this variation to a minimum. A plastics part with thickness variations will experience differing rates of cooling and shrinkage. The result is likely to be a part that is warped and distorted, one in which close tolerances become impossible to hold. Where variations in thickness are unavoidable, the transformation between the two should be gradual not sudden so instead of a step, use a ramp or a curve to move from thick to thin.

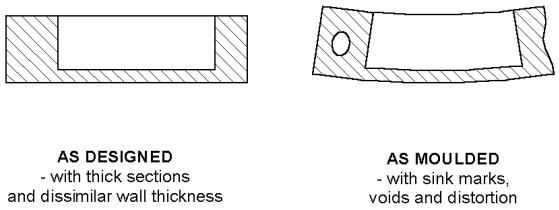

Thick sections and non-uniform walls cause problems

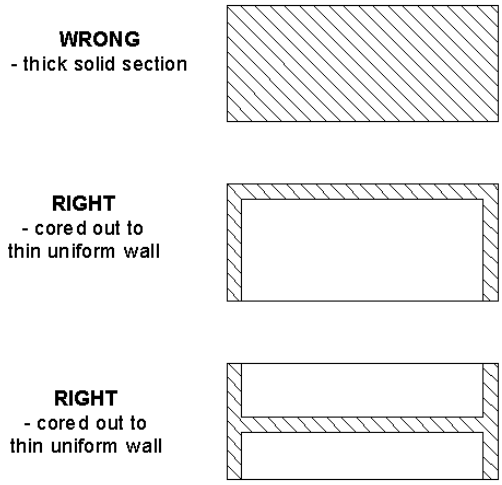

Solid shapes must be redesigned as ‘shells’

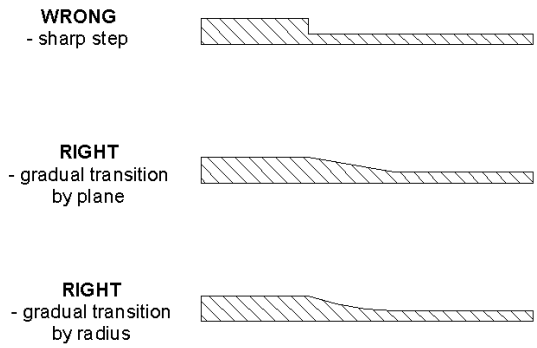

Gradual transitions between thick and thin sections

DESIGNER’S NOTEBOOK

- Keep wall thickness as uniform as possible.
- Use gradual transitions between thick and thin sections.
- Wall thickness must suit both function and process.
- Wall thickness guide range is:

  0.75 mm to 3 mm for reinforced materials
  0.5 mm to 5 mm for unreinforced materials

2 CORNERS

When the ideas of correct and uniform wall thickness are put into practice the result is a plastics part composed of relatively thin surfaces. The way in which these surfaces are joined is equally vital to the quality of a moulded part.

Walls usually meet at right angles, at the corners of a box for example. Where the box walls meet the base, the angle will generally be slightly more than 90 degrees because of a draft angle on the walls. The easiest way, and the worst, to join the walls is to bring them together with sharp corners inside and out. This causes two problems.

The first difficulty is that the increase in thickness at the corner breaks the rule of uniform wall thickness. The maximum thickness at a sharp corner is about 1.4 times the nominal wall thickness. The result is a longer cooling time accompanied by a risk of sink marks and warping due to differential shrinkage.

The other problem is even more serious. Sharp corners concentrate stress and greatly increase the risk of the part failing in service. This is true for all materials and especially so for plastics. Plastics are said to be notch-sensitive because of their marked tendency to break at sharp corners. This happens because the stress concentration at the corner is sufficient to initiate a microscopic crack which spreads right through the wall to cause total failure of the part. Sharp internal corners and notches are the single most common cause of mechanical failure in moulded parts.

The answer is to radius the internal corner, but what size should the radius be? Most walls approximate to a classical cantilever structure so it is possible to calculate stress concentration factors for a range of wall thicknesses and radii. The resulting graph shows that the stress concentration increases very sharply when the ratio of radius to wall thickness falls below 0.4. So the internal radius (r) should be at least half the wall thickness (t) and preferably be in the range 0.6 to 0.75 times wall thickness.

If the inner corner is radiussed and the outer corner left sharp, there is still a thick point at the corner. For an internal radius of 0.6t, the maximum thickness increases to about 1.7 times the wall thickness. We can put this right by adding a radius to the outside corner as well. The outside radius should be equal to the inside radius plus the wall thickness. This results in a constant wall thickness around the corner.

Properly designed corners will make a big difference to the quality, strength and dimensional accuracy of a moulding. But there is another benefit too. Smooth curved corners help plastic flow in the mould by reducing pressure drops in the cavity and minimising flow-front break-up.

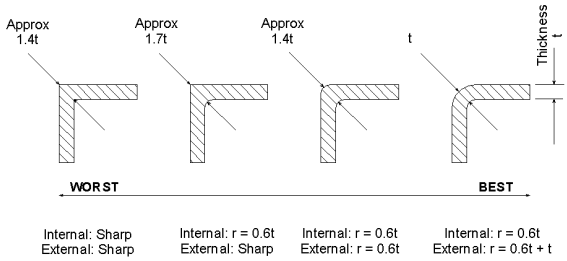

Good and bad corner design

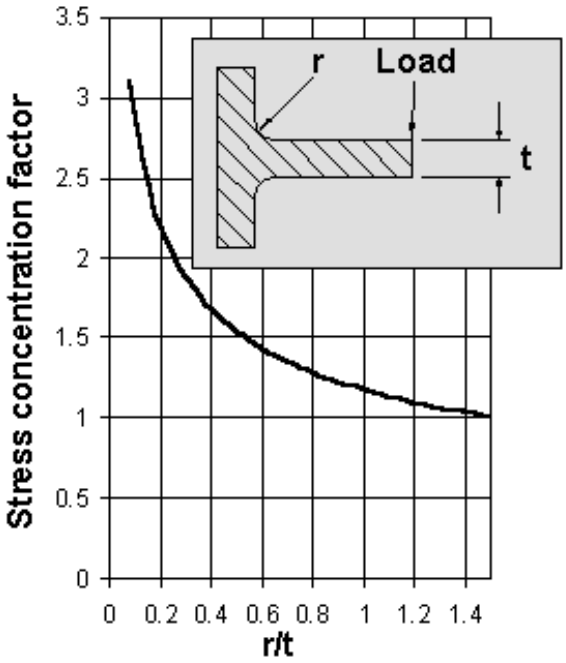

Stress concentration factors for cantilever loading

DESIGNER'S NOTEBOOK

- Avoid sharp internal corners.
- Internal radii should be at least 0.5 and preferably 0.6 to 0.75 times the wall thickness.
- Keep corner wall thickness as close as possible to the nominal wall thickness. Ideally, external radii should be equal to the internal radii plus the wall thickness.

3.1 RIBS

So far in this design series we have seen that plastics parts should be made with relatively thin and uniform walls linked by corner radii, not sharp corners. Both ideas are important in the design of ribs.

When the normal wall thickness is not stiff enough or strong enough to stand up to service conditions the part should be strengthened by adding ribs rather than making the whole wall thicker. The principle is the familiar one used in steel girders where 'I' and 'T' sections are almost as rigid as solid beams but are only a fraction of the weight and cost.

A thicker section is inevitable where the rib joins the main wall. This rib root thickness is usually defined by the biggest circle (D) that can be inscribed in the cross-section, and it depends on the rib thickness (w) and the size of the fillet radius (r). To avoid sink marks, this thick region must be kept to a minimum but there are constraints. If the rib is too thin it will have to be made deeper to give adequate rigidity and then it may buckle under load. There are other problems too; the mould becomes difficult to machine and fill. And ribs filled under high injection pressure tend to stick in the mould.

The fillet radius must not be made too small either, or it will not succeed in reducing stress concentrations where the rib joins the main wall. Ideally, the fillet radius should not be less than 40 percent of the rib thickness. The ribs themselves should be between a half and three-quarters of the wall thickness. The high end of this range is best confined to plastics that have a low shrinkage factor and are less prone to sink marks.

A simple comparison shows the benefit of good rib design. A rib that is 65 percent of the wall thickness and has a 40 percent fillet radius, results in a root thickness that is about 1.23 times the wall thickness. By contrast, the root thickness soars to 1.75 times the wall thickness when the rib is as thick as the wall and has an equal radius.

Ribs of course must be extracted from the mould, so they must be placed in the direction of draw or provided with moving mould parts to free them. Ribs should be tapered to improve ejection; one degree of draft per side is ideal. If the rib is very deep the draft angle must be reduced or the rib becomes too thin. For this reason ribs are often limited to a maximum depth of five times the rib thickness. So far, so good. But how many ribs are needed to make a part strong enough and how should they be arranged? We will examine that in the next Design Guide.

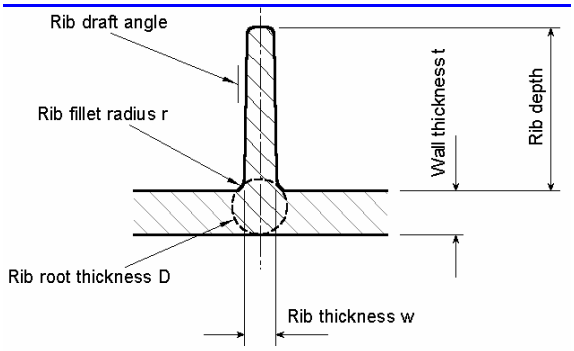

Ribs create thick sections at the root

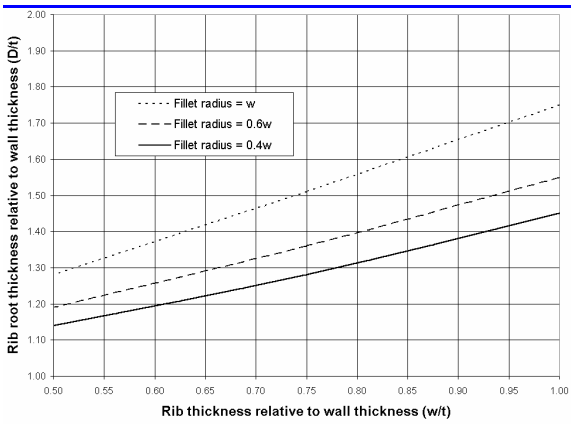

How rib root thickness increases

DESIGNER'S NOTEBOOK

- Rib thickness should be 50 - 75% of the wall thickness.
- Fillet radius should be 40 - 60% of the rib thickness.
- Rib root thickness should not be more than 25% greater than the wall thickness.
- Rib depth should not be more than 5 times the rib thickness.
- Taper ribs for mould release.

3.2 RIBS

Ribs are used to improve the rigidity of a plastics part without increasing the wall thickness so much that it becomes unsuitable for injection moulding. In the previous guide we looked at the basics of rib design. This time we will see how to put ribs into practice.

Usually we want a part to be equally rigid in all directions, just like a solid plate. We can get almost this effect by running ribs along and across the part, so they cross at right angles. This creates a thick section where the ribs cross but if we follow the design rules for ribs and fillet radii the increase is within acceptable limits - about 1.3 times the wall thickness at the worst. This can be reduced almost to the basic wall thickness by forming a cored-out boss at the junction, but a better solution is to use a normal junction with ribs that are less than 0.75 times the wall thickness.

But how many ribs do we need and how deep should they be? Rigidity is a function of the moment of inertia of the rib section. This tells us that the stiffening effect of a rib is proportional to its thickness but proportional to the cube of its depth. So deep ribs are structurally much more efficient than thick ribs.

A common task is to develop a relatively thin ribbed plate that has the same rigidity as a thick solid plate. Standard engineering text books provide the basic formulae to make the calculation but the mathematics can be a chore to manage manually. To minimise the work a number of 'ready reckoners' have been devised, including an elegant cross-rib solution developed by DuPont. Most of these reckoners or calculators are based on a particular set of assumptions so use with caution if your design varies.

For example, the DuPont ribbed plate calculator assumes the ribs are the same thickness as the wall. To see how it works, let's imagine that we want to design a cross-ribbed plate with a 2.5 mm wall (t_B) that will be as stiff as a solid plate of 5 mm thick (t_A). Calculate t_B/t_A – the value is 0.5 – and find this value on the left-hand scale. Rule a line across to the right-hand scale and read off the value which is 1.75. This value is T/t_A where T is the rib depth including the wall thickness. So in our example, T = 1.75 times t_A which is 8.75 mm. Now read off the value on the base scale vertically below the point of intersection between the 0.5 line and the curve. The figure is 0.16 and it represents the product of t_A and the number (N) of ribs per unit of plate width (W). The curve assumes that W is unity. So N equals 0.16 divided by t_A which is 0.032 ribs per mm of width, or one rib per 31.25 mm.

We can make a pro rata adjustment for ribs that are correctly designed to be thinner than the wall. If the ribs are 65 percent of the wall thickness, the rib spacing becomes 65 percent of 31.25, making it 20 mm for practical purposes.

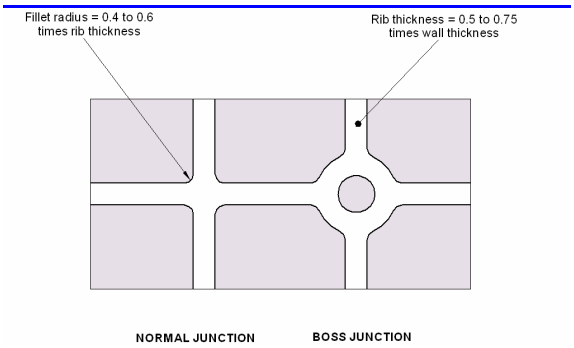

Alternative rib junctions

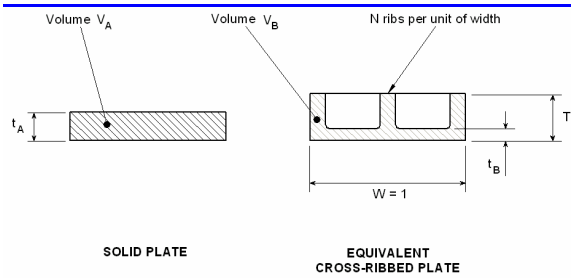

Terms for the calculator

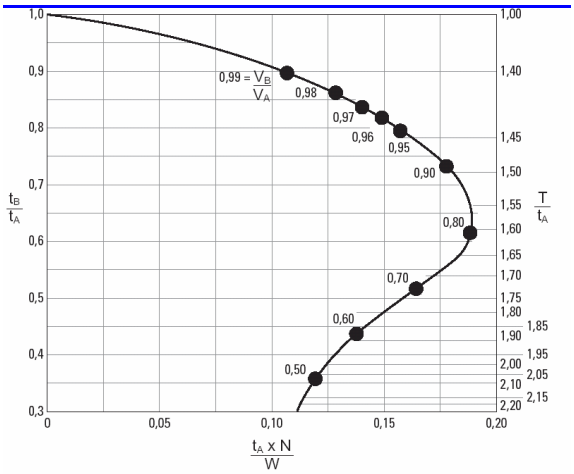

Cross-ribbed plate calculator Source: DuPont

DESIGNER'S NOTEBOOK

- Deep ribs are stiffer than thick ribs.
- Follow the basic rules for rib thickness and fillet radii.
- Calculate rib depth and spacing with a reckoner, or by using math software or finite element analysis.

3.3 RIBS

Ribs are important in the design of plastics parts because they allow us to make a component rigid without making it too thick. We have already looked at the fundamentals and seen how to design a cross-ribbed part. Sometimes though, we only need rigidity in one direction. This usually happens on a long thin feature like a handle. In this case, we can improve stiffness along the length of the part by adding a number of parallel ribs. These are called unidirectional ribs.

The first consideration is that these ribs must not be too close together. This is because the gap between the ribs is produced by an upstanding core in the mould. If this core is too thin it becomes very difficult to cool and there may also be a shrinkage effect that will cause ejection problems. The usual rule is make the gap at least twice the nominal wall thickness and preferably three times or more.

As in the case of cross-ribs, design is based on the principle that rigidity is proportional to the moment of inertia of the wall section. This provides a way of working out thin ribbed sections that have the same stiffness as thick plain sections. Calculator curves make the job easier. Curves are available for calculating deflection (strain) and stress on various rib thicknesses. Our example shows a deflection curve for rib thicknesses equal to 60 per cent of the nominal wall thickness.

For simplicity, the calculation splits the unidirectional ribbed part into a number of T-section strips, each with a single rib. The width of the strip is known as the 'equivalent width' or BEQ. To see how the calculator works, we will design a ribbed part with the same stiffness as a rectangular section 45 mm wide (B) by 12 mm thick (W_d). We decide on four ribs and a nominal wall thickness of 3mm (W). There are three simple calculations to make.

BEQ = B/N = 45/4 = 11.25
BEQ/W = 11.25/3 = 3.75
W_d/W = 12/3 = 4

Now find the value 4 on the left-hand axis and draw a horizontal line to intersect with the 3.75 curve shown on the right-hand axis. Drop a vertical from this point and read off the value, 5.3, on the bottom axis. This figure is the ratio of rib height (H) to the nominal wall thickness (W). So the rib height in this example is:

H = 3(5.3) = 15.9

This is more than 5 times the rib thickness, so we should be concerned about buckling. We can't increase the number of ribs without spacing them too closely so our options are to make the ribs and/or the wall thicker. Design often requires a few iterations to get the best result.

We can also use ribs on side walls. Instead of making the side wall thicker, we stiffen it with buttress ribs, often known in the USA as gussets. The same design rules apply. It is particularly important to follow the rule for thickness otherwise sink marks will show on the outside of the part.

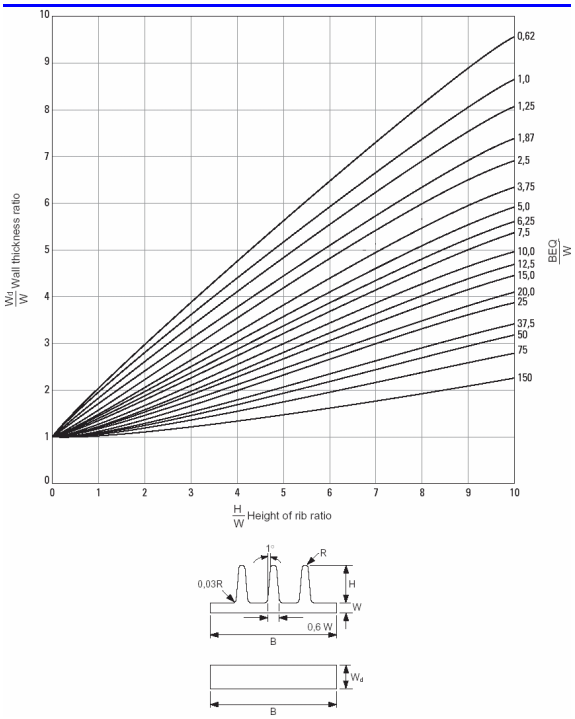

Unidirectional rib calculator Source: DuPont

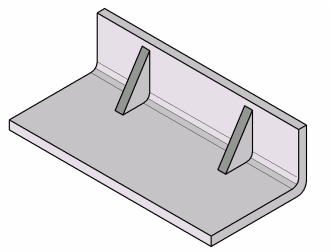

Use buttress ribs to stiffen side walls

DESIGNER'S NOTEBOOK

- Unidirectional ribs should be spaced apart by at least 2 and preferably 3 or more times the nominal wall thickness
- Rib depth should not be more than 5 times rib thickness
- Use the calculator curve to work out rib heights
- Use buttress ribs to stiffen side walls

4.1 BOSSES

The boss is one of the basic design elements of a plastics moulding. Bosses are usually cylindrical because that is the easiest form to machine in the mould and it is also the strongest shape to have in the moulded part. The boss is used whenever we need a mounting point, a location point, a reinforcement around a hole, or a spacer. The boss may receive an insert, a screw, or a plain shaft either as a slide or a press fit. In other words, the boss is not as simple as it looks. Depending on its use, it may have to stand up to a whole combination of forces – tension, compression, torsion, flexing, shear and bursting - so it must be designed accordingly.

We can start with some general design rules, using the principles we have already developed for ribs and walls. The boss can be thought of as a special case of a rib; one that is wrapped round in the form of a tube. An 'ideal' boss, designed according to rib rules, would not produce sink marks or stick in the mould but unfortunately the tubular form of the boss would not be strong enough in most cases. In real life, most bosses break some rib design rules by necessity. This means that boss design is a compromise between sink marks and functionality.

Rigidity is the simplest aspect of boss design. This can be achieved by supporting the boss with buttress ribs, and often by linking the boss to a side wall. The support ribs can be designed to normal rib rules so that sink marks and stress points are avoided.

When the boss is linked to a side wall, either at an edge or the corner of a component, there is a right and a wrong way to do it. The wrong way is simply to extend the boss outside diameter to meet the wall. This inevitably produces a thick section that will result in sink marks, voids, and long cooling cycles. The right way is to link or tie the boss to the side wall with a flat rib, preferably recessed a little below the boss or edge height so that it cannot interfere with any assembly conditions. The other ribs that tie the boss to the base wall remain as buttress ribs. For economical machining of the mould, the ribs should be aligned on the X-Y axes of the component except for the flat corner rib which is placed at 45 degrees. The single diagonal rib is better than two X-Y ribs because it avoids a small mould core between the ribs. Such small cores are prone to damage and are difficult to cool; this may result in slower moulding cycles and more down time.

So we have established how to connect the boss to the rest of the component. The more difficult part of boss design concerns the hole and the thickness of the boss.

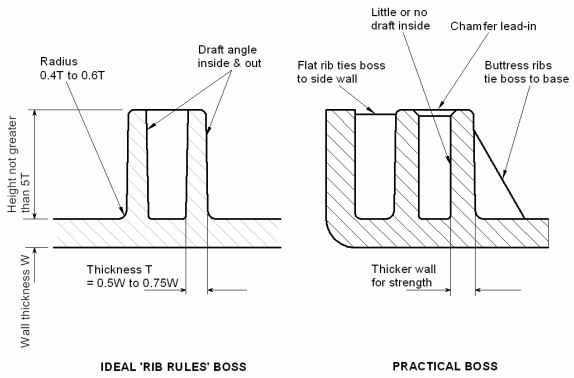

Boss design is a compromise

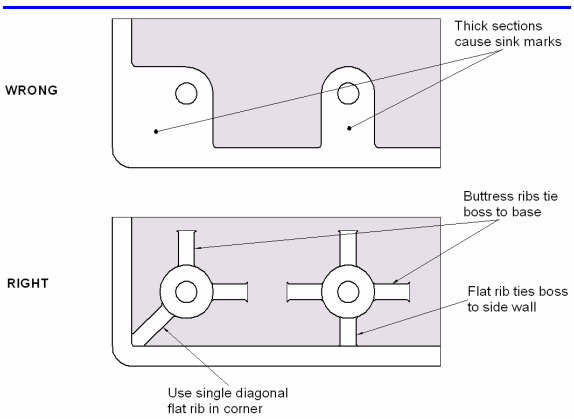

There is a right and a wrong way to support bosses

DESIGNER'S NOTEBOOK

- Before designing a boss, consider its function and the forces acting on it during assembly and service
- If the forces are not great, it may be possible to dispense with support ribs, otherwise:
    - Anchor the boss to the base wall with buttress ribs.
    - If possible, anchor the boss to the side wall with a flat rib.
    - Avoid rib arrangements that result in small mould cores or complicated mould machining set-ups.

4.2 BOSSES

Perhaps the most common function of a boss is to accept a screw fastener. There are two types of screw in widespread use. *Thread-cutting* screws work by cutting away part of the boss inner wall as they are driven in. This produces a female thread, and some swarf. *Thread-forming* screws produce the female thread by a cold flow process; the plastic is locally deformed rather than cut and there is no swarf. Generally, thread-forming screws are preferred for thermoplastics whereas thread-cutting screws are better for hard inelastic materials such as thermosets. The range of screws on the market makes it difficult to give a general design rule, but one approach is to use the flexural modulus of the material as a guide to which type to use.

Screw bosses must be dimensioned to withstand both screw insertion forces and the load placed on the screw in service. The size of the hole relative to the screw is critical for resistance to thread stripping and screw pull-out, while the boss diameter must be large enough to withstand hoop stresses induced by the thread forming process. Screw bosses have one important additional feature: the screw hole is provided with a counterbore. This reduces stress at the open end of the boss and helps to prevent it splitting. The counterbore also provides a means of locating the screw prior to driving.

The dimensions of the boss and hole depend on two things; the screw thread diameter and the plastics material type. The table gives boss, hole and depth factors for a variety of plastics. To design a screw boss, look up the material and multiply the screw thread diameter by the appropriate factors to dimension the hole, boss and minimum thread engagement depth. Once again, the variety of available screw types and plastics grades means that general guidelines must be used with caution.

Screw and boss performance can also be adversely affected by outside influences. If the boss has been moulded with a weld line, the burst strength may be reduced. A lot depends on service conditions too: if the boss is exposed to a high service temperature, or to environmental stress cracking agents, its performance will be reduced, sometimes drastically.

When designing bosses for screws, use the manufacturer's recommendations for the particular screw type but for critical applications, there is no substitute for testing before finalising the design.

Flexural Modulus of plastic (Mpa)	Preferred screw type
Less than 1,400	Thread-forming
1,400 to 2,800	Thread-forming or Thread-cutting
2,800 to 6,900	Thread-cutting
Greater than 6,900	Thread-cutting, fine pitch

Screw selection depends on material Source: DuPont

Material	Hole Factor	Boss Factor	Depth Factor
ABS	0.80	2.00	2.0
ABS/PC	0.80	2.00	2.0
ASA	0.78	2.00	2.0
PA 46	0.73	1.85	1.8
PA 46 GF 30%	0.78	1.85	1.8
PA 6	0.75	1.85	1.7
PA 6 GF 30%	0.80	2.00	1.9
PA 66	0.75	1.85	1.7
PA 66 GF 30%	0.82	2.00	1.8
PBT	0.75	1.85	1.7
PBT GF 30%	0.80	1.80	1.7
PC	0.85	2.50	2.2
PC GF 30%	0.85	2.20	2.0
PE-HD	0.75	1.80	1.8
PE-LD	0.75	1.80	1.8
PET	0.75	1.85	1.7
PET GF 30%	0.80	1.80	1.7
PMMA	0.85	2.00	2.0
POM	0.75	1.95	2.0
PP	0.70	2.00	2.0
PP TF 20%	0.72	2.00	2.0
PPO	0.85	2.50	2.2
PS	0.80	2.00	2.0
PVC-U	0.80	2.00	2.0
SAN	0.77	2.00	1.9

Screw boss design factors Sources: TR Fastenings and ASP

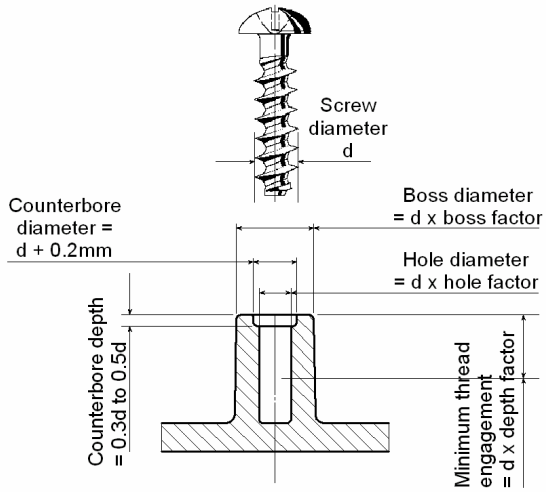

Boss dimensions are a function of material and screw diameter

DESIGNER'S NOTEBOOK

- Select the right screw type - thread-forming or thread-cutting - to suit the plastics material.
- Use a counterbore to reduce stress at the open end.
- Make the hole deep enough to prevent screw bottoming.
- Use the manufacturer's design recommendation, otherwise use the factors in this design guide as a starting point.
- Test, if the application is critical.

4.3 BOSSES

The quality of a screw connection depends mainly on stripping torque and pull-out force. Stripping torque is the rotational force on the screw that will cause the internal threads in the plastics boss to tear away. Driving torque, the force needed to insert the screw and form the thread in the boss, must be less than stripping torque otherwise the connection must fail. In practice you will need a safety margin, preferably not less than 5:1 for high speed production with power tools. Stripping torque is a function of the thread size and the boss material; it increases rapidly as the screw penetrates and tends to level off when screw engagement is about 2½ times the screw pitch diameter. Driving torque depends on friction and the ratio of hole size to screw diameter. Modern thread-forming screws for plastics have been designed to avoid torque stripping, so there should be no problem if you follow the hole size recommendations given in the previous design guide.

The purpose of the screw is to hold something down. The limiting factor on its ability to do this is the pull-out force. When the force needed to hold something down exceeds the screw pull-out force, the screw threads in the plastics boss will shear off, allowing the screw to tear free from the boss. Pull-out force depends on the boss material, thread dimensions, and the length of screw engagement.

Screw pull-out force (F) can be approximated from the equation:

$$F = \left(\frac{S}{\sqrt{3}}\right)\pi DL$$

where S = design stress, D = screw pitch diameter, and L = length of thread engagement. Design stress S is the tensile stress for the boss material, divided by a safety factor which is typically given a value of 2 or 3. Because screws are expected to be effective over the design life of the product, the tensile stress value should be taken from creep data at a suitable time value such as 5 years (43,800 hours). As our sample calculation shows, the difference is significant.

Torque (T) needed to develop the pull-out force (F) can be calculated from:

$$T = \frac{FD}{2}\left(2f + \frac{P}{\pi D}\right)$$

... where f = coefficient of friction, and P = screw thread pitch.

These simplified calculations assume a conventional screw form and can only give an indication of screw performance. In practice, thread-forming screws will perform better than indicated because they are designed to create a stronger plastics section between screw flights. The variety of proprietary thread forms on the market also makes it impossible to provide a simple universal calculation. If the application is critical, there is no substitute for testing.

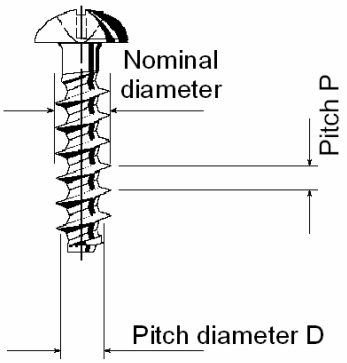

Screw terms

SAMPLE CALCULATION

Using a 2.5 mm nominal diameter screw in an ABS boss.

A typical tensile stress value for ABS is about 35 MPa but the 5-year value is only half that at 17.25 MPa. D = 2 mm, L = 6 mm, P = 1.15 mm. The safety factor is 2, and the dynamic coefficient of friction for ABS on steel is 0.35.

$$F = \left(\frac{17.25/2}{\sqrt{3}}\right)(\pi \times 2 \times 6) = 188 \text{ Newtons}$$

$$T = \left(\frac{188 \times 2}{2}\right)\left(2 \times 0.35 + \frac{1.15}{2\pi}\right) = 0.166 \text{ Newton metres}$$

DESIGNER'S NOTEBOOK

- Check that pull-out force is adequate for the application, bearing in mind the design life.
- Remember that performance will be reduced at elevated temperatures.
- Use only thread-forming screws designed for plastics.
- Test, if the application is critical.

5.1 DESIGN FOR RECYCLING

In recent years we have come to realise that the wealthy nations are living beyond the means of the planet. Our ecological footprint became unsustainable in the late 1980s; it now exceeds the biocapacity of the Earth by more than 25 percent. And these overdrawn resources are being put to such unwise use that climate change threatens rising sea levels and declining crop yields on a disastrous scale. Morality as well as prudence dictates that we must make better use of materials in the first place and reuse them when the product life expires. One result for the plastics industry is the pressure to recycle, a movement that is increasingly reinforced worldwide by legislation.

This has given designers new responsibilities. It is no longer enough to consider just styling, cost efficiency, safety and utility; we must now add material conservation, recycling and disposal.

The table lists the recycling and disposal methods in common use for plastics. However, landfill solutions are no longer acceptable, product reuse applies only to special cases, energy recovery is in some ways a last resort, and feedstock recycling usually implies a high-volume supply of single type of polymer. That leaves mechanical recycling as the likely route for many thermoplastics products, and this has a number of consequences for designers.

Foremost is the need to identify plastics at the end of the product life. Different plastics may be completely incompatible and if they are mixed by a failure to distinguish between them, the value of the waste is greatly reduced. Even experts find it difficult to tell one plastic from another so we need a standard way to mark plastics products with the identity of the material. The first attempt came almost 20 years ago in the USA, when the Society of the Plastics Industry (SPI) introduced its resin identification code. This consists of a chasing-arrows symbol in which the material is identified by a number from 1 to 7, often augmented by an abbreviation. The code was originally intended for bottles and containers, so the numbers identify only the most common plastics for these applications.

An ISO standard has extended the idea to all plastics by adopting the SPI triangular arrows symbol and adding between angle brackets an internationally-recognised abbreviation for the polymer type. Standard mould inserts bearing the symbol are available from mould standards suppliers. Optionally, you can add precise details of the grade. However, as the grade can change over the life of the mould, it is better to do this by a secondary automatic marking operation such as laser or inkjet printing. It should now be standard practice to identify all plastics parts, and many major OEMs make this a condition of supply.

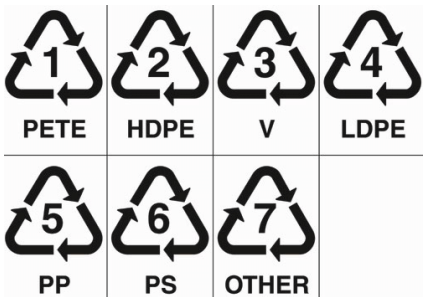

SPI identification code

Recycling method	Comments
Product reuse	The product is designed to be used more than once. Returnable bottles are an example.
Traditional disposal	The product is dumped in landfill sites where it may remain indefinitely. This solution is environmentally unfriendly for all but bio-degradable plastics. Landfill generally is being phased out by public opinion and rising costs.
Treatment and dumping	Products are pre-treated to reduce volume and remove pollutants before disposal in landfill.
Mechanical recycling	Products are sorted, cleaned, and reprocessed into pellets ready for the production of new products. The process is very suitable for thermoplastics.
Feedstock recycling	Products are broken down into basic chemical constituents that can be used to synthesise new chemical products, whether plastics or otherwise.
Energy recovery	Products are burned under controlled conditions to recover stored energy. Plastics have a higher calorific value than coal. The process is suitable for low-value mixed and soiled wastes.

DESIGNER'S NOTEBOOK

- Designers now have to consider material conservation and recycling.
- The material of manufacture should be marked on all plastics parts, using standard symbols and abbreviations.

5.2 DESIGN FOR RECYCLING

Marling provides an easy basis for sorting of incompatible plastics so that when the time comes for disposal, the materials can be sorted easily into the different polymer families.

Ideally products would use only one polymer type but the components in a product or sub-assembly have to perform different duties and this often means that we must use several different plastics together. Identification marks are essential in this situation, but there is something more we can do. Not all plastics are mutually incompatible. Some materials are compatible in volume and many more are acceptable in minor proportions. This means that sorting is not always essential. If the designer takes care to use plastics that are mutually compatible, then dismantling and sorting can perhaps be done away with altogether. The recyclate produced by granulating these compatible materials together will form a polymer blend on reprocessing. The chart shows which materials could usefully be combined in an assembly. However, this is not to suggest that they should simply be combined in the barrel of an injection moulding machine. Co-processing of such materials will usually require specialised compounding equipment and often the inclusion of additives such as compatibilisers. And the rules of normal prudence apply. If in doubt, don't do it.

The emphasis on recycling and the need to reduce the number of different plastics used in a single product will have a number of consequences. Thermoplastics will be preferred to thermosets, versatile materials with a wide range of applications will be preferred to narrow-use materials, and components will be re-engineered in materials that improve the inter-compatibility of the finished product.

These principles can be seen in action in the automotive industry, e.g. cross-linked polyurethane upholstery foamed materials have been replaced by thermoplastic bonded fibres. The versatility principle is demonstrated by the rise of polypropylene. Uses range from bumpers to carpets and upholstery fabrics; polypropylene now accounts for a high proportion of automotive plastics applications. Reduction of variety applies not just to families of plastics but to grades as well. Automotive manufacturers consolidate specified plastics to the feasible minimum of grades.

Headlight design illustrates the compatibility principle. Previously, the different materials in a headlamp made recycling too expensive to be worthwhile. Now the idea is to design around compatibility for a single material family such as polycarbonate. The lens, reflector and diffuser can be produced in polycarbonate while the housing can be made from a polycarbonate blend with ABS or PBT. Once the metal parts have been removed, the entire assembly can be regranulated to form a further PC blend. This closes the recycling loop by using this to mould new headlamp housings.

Compatibility is also the reason for an increase in the automotive share of ABS. The chart shows that that it is compatible with many thermoplastics and to a limited extent with most others. By contrast, the compatibility of PVC is very limited and it has suffered a big fall in automotive use.

MINOR COMPONENT \ MAJOR COMPONENT	ABS	ASA	PA	PBT	(PBT+PC)	PC	(PC+ABS)	(PC+PBT)	PE	PET	PMMA	POM	PP	PPO	(PPO+PS)	PS	PVC	SAN	TPU
ABS	●	●	◐	●	●	●	●	●	◐	◐	●	◐	◐	◐	◐	◐	●	●	●
ASA	●	●	◐	●	●	●	●	●	◐	◐	●	◐	◐	◐	◐	◐	●	●	●
PA	◐	◐	●	◐	◐	○	○	○	◐	◐	◐	◐	◐	○	◐	◐	○	◐	●
PBT	●	●	◐	●	●	●	●	●	◐	◐	◐	◐	◐	◐	◐	◐	○	●	◐
(PBT+PC)	●	●	◐	●	●	●	●	●	◐	◐	◐	○	◐	◐	◐	◐	○	●	●
PC	●	●	○	●	●	●	●	●	◐	●	●	○	◐	◐	◐	◐	○	●	◐
(PC+ABS)	●	●	◐	●	●	●	●	●	◐	●	●	◐	◐	◐	◐	◐	○	●	●
(PC+PBT)	●	●	○	●	●	●	●	●	◐	●	●	◐	◐	◐	◐	◐	○	●	●
PE	○	○	◐	○	○	◐	○	○	●	○	○	○	●	○	◐	○	◐	○	◐
PET	●	●	◐	●	●	●	●	●	◐	●	◐	◐	◐	◐	◐	◐	○	●	◐
PMMA	●	●	◐	◐	◐	●	●	●	◐	◐	●	○	◐	◐	◐	◐	◐	●	◐
POM	◐	◐	◐	◐	◐	○	○	○	◐	◐	○	●	◐	◐	◐	◐	○	◐	◐
PP	○	○	◐	○	○	○	○	○	◐	○	○	○	●	○	◐	○	◐	○	◐
PPO	◐	◐	◐	◐	◐	◐	◐	◐	◐	◐	◐	◐	◐	●	●	●	○	◐	◐
(PPO+PS)	◐	◐	●	◐	◐	◐	◐	◐	◐	◐	◐	◐	◐	●	●	●	○	◐	◐
PS	◐	◐	◐	◐	◐	◐	◐	◐	◐	◐	◐	◐	◐	●	●	●	◐	◐	◐
PVC	●	●	○	○	○	○	○	○	◐	○	●	○	◐	○	◐	◐	●	●	●
SAN	●	●	◐	●	●	●	●	●	◐	◐	●	◐	◐	◐	◐	◐	●	●	◐
TPU	●	●	●	◐	●	●	●	●	◐	●	●	●	◐	◐	◐	◐	●	●	●

● = good compatibility over a wide blending range
◐ = limited compatibility with low volumes
○ = incompatible

Compatibility of thermoplastics

Source: After Bayer

DESIGNER'S NOTEBOOK

- Thermoplastics are better for recycling than cross-linked thermosets.
- Prefer versatile materials that have a wide range of applications.
- Use compatible materials together to minimise dismantling and sorting.

5.3 DESIGN FOR RECYCLING

Where product assemblies are concerned, we can also help by eliminating or at least minimising the use of non-plastics parts, all of which will have to be removed before the plastics items can be recycled. These non-plastics parts include metal screws, inserts and clips, labels, adhesives, paints, chromium plating, vacuum metallising and so on. Removal will involve a primary treatment – dismantling – followed in many cases by a secondary treatment, for example fluid treatment to remove paper labels. Dismantling is the converse of assembly, and since assembly may involve the use of non-plastics parts, we need to look again at assembly methods to see which are the best choices for recycling.

There are two aspects to consider. The first is how easy it is to dismantle the assembly. The second is how easy it is recycle the once-joined parts. Remember that these parts may be of identical plastics, or of different but compatible plastics, or of incompatible plastics.

Mechanical joints are the easiest to dismantle. Snap fits can be dissembled by hand or with the simplest of hand tools. Press fits and joints secured by screws or metal clips can be broken down almost as easily. Bonded joints produced by welding or adhesives are the hardest to deal with. However, welded joints score on ease of recycling because, with the exception of induction welding, there are no non-plastics materials to consider. Solvent bonded joints are also effectively free of foreign materials. The same is not true of adhesive bonded joints, although the foreign adhesive matter forms a minor proportion of the whole and can perhaps be disregarded, depending on the nature of the adhesive.

Snap fits, hot air staking and press fits emerge as the best assembly methods for recycling. However, all design is a compromise and recycling is only one of many considerations at the product development stage. This means that there will often be circumstances in which one of the other assembly methods proves to be the most appropriate. It would obviously be unwise to diminish function or service life in favour of easy recycling. The point to remember is that end-of-life recycling is now an essential design consideration whereas in the past it was generally overlooked.

Design compromise can be teamed with ingenuity to get the best result. For example, when it proves impossible to eliminate non-plastics parts, it may still be practical to concentrate the foreign material in one part of the assembly. This can then be broken off and scrapped or dealt with separately while the remainder of the product is recycled.

ASSEMBLY METHOD	EASE OF DISMANTLING	EASE OF RECYCLING (compatible plastics)	EASE OF RECYCLING (incompatible plastics)
Snap fits	●	●	●
Press fits	◐	●	●
Living hinge	N/A	●	N/A
Hot air staking	◐	●	◐
Ultrasonic welding	○	●	◐
Hot plate welding	○	●	N/A
Spin welding	○	●	N/A
Friction welding	○	●	N/A
Induction welding	○	○	○
Laser welding	○	◐	◐
Solvent bonding	○	●	N/A
Adhesive bonding	○	◐	◐
Metal screws, inserts, clips, pins	◐	○	○

● = good
◐ = intermediate
○ = difficult
N/A = not applicable

Effect of assembly method on recycling

DESIGNER'S NOTEBOOK

- Eliminate or minimise the use of non-plastics parts
- Snap fits, hot air staking and press fits are the best for recycling.
- Welded joints are good for recycling but difficult to dismantle.
- Design for recycling, but not at the expense of function or service life.

5.4 DESIGN FOR RECYCLING

Although function and service life is still the first consideration, designers now have a responsibility to make products that conserve materials and simplify their recovery at the end of the product life. We will now consider design for easy dismantling.

The first principle is to design assemblies so that joints and connection points are both accessible and easy to recognise. If the cosmetics of the part allow it, dismantling information can be marked on the moulding by any of the normal means including mould engraving, laser printing or labelling.

For recycling to be economical, the dismantling process must be quick and simple. Ideally, the joint should be such that it can be broken by hand or with the simplest and most commonplace of hand tools such as a screwdriver. The simplest case, and the best design for recycling, is to use elastic joining methods such as press fits and snap fits. These can usually be pulled apart by hand. However, some snap fits have to be designed to be irreversible if the assembly is to function properly. The solution here is to provide access for a screwdriver blade that can be used either to press back the snap fit spring cantilever or to break away the retaining rib.

A development of this principle is to design in pre-determined break points. This is particularly useful for irreversible joints or for joints where foreign or incompatible materials are involved. For example, a joint using a metal screw and insert can be designed to be broken away manually from the main plastics body, so that the metal-rich fragment can be sent to a separate waste stream.

When break-away zones are used with irreversible joints made by welding or bonding, a portion of ‘B’ material may remain with the joint and main body of ‘A’ material. In this case, it is important that the two materials should be identical or at the very least compatible. Where compatibility is impossible, it may be possible to provide a break-away zone on both sides of the joint, so that only a small portion of mixed material remains to be scrapped or sent to a separate waste stream.

The strength or rigidity of the assembly may make anything other than localised break-aways impractical. One recycling solution for this problem is to cut away the irreversible joint using a band saw or other means.

Where this is the best answer, it is helpful to indicate a safe cutting line for recycling at a point where the blade will not encounter hidden inserts or other dangers.

The ultimate remedy for difficult dismantling is to reduce the need for it by reducing the plastics part count in the assembly. This is done by integrating as many functions as possible into a single multi-functional plastics component. Injection moulding lends itself particularly well to this technique because of its ability to produce very complex parts in a single high speed operation. Parts integration should be a prime aim for a plastics designer. Quite apart from the recycling benefit, the technique produces large savings on assembly costs and parts inventories.

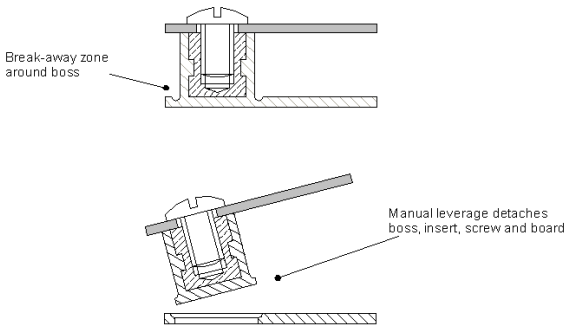

Break-away zone used to separate metal-rich region

Source: After GE Plastics

DESIGNER’S NOTEBOOK

- Make connection points accessible and easy to recognise.
- Use snap and press fits as much as possible.
- Design in break-away zones.
- Use multi-functional parts to minimise dismantling.

5.5 DESIGN FOR RECYCLING

One of the most environmentally-friendly things we can do in product design is to reduce material use. One way is to reduce the overall density of the material. Gas-assist (GAIM) and water-assist injection moulding (WAIM) technologies achieve this by generating large internal voids in thick sections. Another way is to create a large number of small internal voids in the form of a foamed core, by the structural foam moulding process for example. A newer method – the Trexel MuCell process - generates a microporous structure in moulded parts but the technique is not aimed at thick sections and the weight saving may be less than 5 percent.

Another way of reducing material use is to reduce the wall thickness of the plastics part. Thick walls usually exist for one of two reasons – for structural strength or to make mould filling easier. You can achieve the same or better strength by replacing a thick wall by a thinner one supported by reinforcing ribs. CAE software now makes it much easier to create a good structural design. You can also consider wall thinning by using a different polymer that is structurally stronger.

If mould filling is the problem, you can consider using an easier-flowing polymer in order to reduce the wall thickness. Here the MuCell process scores by greatly improving flow in the mould. Another way is to reduce the flow length by using more injection gates. This can be done quite conveniently by using a hot runner system, and that of course cuts out all the waste of a cold runner system. Moulding simulation software can tell you how thin a part can be before filling becomes a problem.

Another issue is to use good processing practice to minimise thermal and mechanical damage to the polymer when making the initial article. This means that it will be better able to withstand subsequent recycling and reprocessing and will yield a product of greater value.

Finally, we need to embrace environmentally-conscious design, not resist it. Indeed, avoidance will become virtually impossible as social, economic and legislative pressures accumulate. The table sets out some of the key environmental initiatives that are now affecting product design and manufacturing worldwide.

Initiative	Definition	Aim
Design for the environment (DFE)	Consider and minimise environmental impact at the design stage	Environmental stewardship
Environmentally conscious manufacturing (ECM), also known as green manufacturing	Minimise use of toxic materials and generation of pollution	Environmental stewardship
Producer responsibility	Product manufacturers take responsibility for good environmental management of life-expired products	Link disposal costs to purchase price and manufacturing profit
Life cycle assessment (LCA)	Method of quantifying environmental impacts at all stages of a product's life, from raw materials to disposal	Provide a rational basis for deciding which product is best environmentally
Pollution prevention	Consider the issue of pollution before it is generated instead of afterwards	Reduce pollution costs and damage
Product life cycle management (PLCM)	Method of managing environmental impacts at all stages of a product's life, from raw materials to disposal	Environmental stewardship
Product take-back	Requiring manufacturers to recover life-expired products	Link disposal costs to purchase price and manufacturing profit
Toxins reduction	Minimise the use of toxic materials in manufacturing	Reduce toxic emissions and risks to production workers

Environmental initiatives affecting product design

Source: After American Plastics Council

DESIGNER'S NOTEBOOK

- Consider using GAIM, WAIM or foaming methods.
- Use good structural design to make walls thinner.
- Use good flow design to make walls thinner.
- Use gentle processing conditions to minimise polymer damage.
- Embrace environmental design rather than resist it.

6.1 LIVING HINGES

A hinge is a feature that joins two parts while allowing one to rotate with respect to the other. The most common applications are to join a lid to a box, or a door to a frame. Normally the hinge is a separate component so the assembly consists of at least three parts, plus whatever fixings are necessary. Plastics allow us to reduce the parts count to just one. The concept is called the living hinge, or sometimes the integral hinge or moulded-in hinge. The living hinge consists of a thin-wall section that unites the lid and box portions of a moulding. It is injection moulded integrally with them, in a single operation. The success of a living hinge depends crucially on three factors; the material, the hinge design, and the moulding conditions.

Any thermoplastic that is flexible in thin sections can in principle be used to make a hinge. Most, if not all, will be successful provided the hinge is operated only occasionally. For example, some electronic connector bodies are folded and snapped together on assembly and in this case, the hinge is operated only once. Other hinges, like those on bottle caps, are probably used little more than one hundred times. However, when the hinge must be very strong and stand up to a great many operations, the material of choice is polypropylene or more rarely, polyethylene. When correctly treated, polypropylene has exceptional resistance to flexural fatigue and this makes it pre-eminent as a living hinge material.

The hinge section itself must be thick enough to allow adequate material flow through to fill the ‘downstream’ cavity which is usually the lid. It must also be thick enough to stand any stress that will be placed on it in service. And on the other hand, the hinge must be thin enough to flex easily, and thin enough to generate molecular orientation as the polymer flows through. There will be more about orientation in the next Design Guide. The recommended hinge thickness for polypropylene is 0.25 mm to 0.50 mm.

The second important design point is that there should be no sharp corners associated with the hinge area. There are two reasons for this. Sharp corners cause stress concentrations known as the notch effect. This is a prime cause of failure in plastics parts. The other reason is that the narrow hinge forms a significant obstacle to melt flow in the mould. Radiused approaches minimise the obstacle and tend to help with molecular orientation in the hinge.

The third key point is related to the notch effect. If the back of the hinge is formed by a planar surface, there will be a tendency when the hinge is flexed for the material to form a sharp highly-stressed crease where cracking can occur. The crease itself acts as a notch to concentrate the stress and greatly increase the likelihood of failure. The way to deal with this problem is to provide a shallow relief along the back surface of the hinge. Now when the hinge is flexed, a small lightly-stressed loop forms and the notch effect is eliminated.

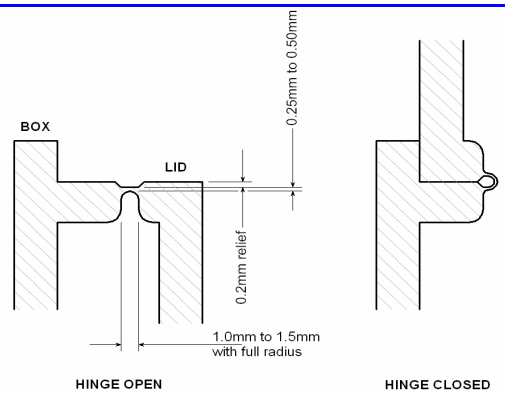

Recommended dimensions for a living hinge in polypropylene

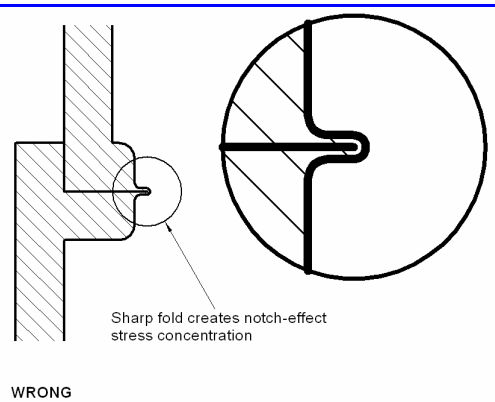

Design to avoid a sharp fold when the hinge is closed

DESIGNER’S NOTEBOOK

- Polypropylene is the preferred material for living hinges.
- Avoid sharp corners.
- Relieve the back surface of the hinge.
- The usual thickness for a polypropylene hinge is 0.25 mm to 0.50 mm.

6.2 LIVING HINGES

Design of the living hinge is only half the story. A correctly designed hinge will still fail if the processing is wrong.

The essential feature is that flow during mould filling must take place across the hinge rather than along it. Flow across the thin hinge causes the long-chain polymer molecules to become aligned in the direction of flow, so that this area of the moulding becomes very strong in the flow direction and relatively weak at right angles to the flow. So, if flow occurs along the hinge, there will be weakness to stresses acting across the hinge and the hinge will break in service.

The direction of flow is determined by the position of the gate in the mould. In the case of a box with a lid joined by a living hinge, the gate must be placed on a line orthogonal to the centre point of the hinge and at some distance from it. Assuming that the wall thickness of the box near the hinge is constant, any off-centre position of the gate will create non-uniform flow across the hinge, and in thicker hinges may introduce an element of diagonal flow that will weaken the hinge.

There is another important effect to consider. The injected plastics melt will flow through the relatively thick box and lid much more easily than the thin hinge area. So if the gate position in the box causes the flow front during filling to reach the hinge before the box is filled, flow through the hinge will hesitate while the remainder of the box fills. Only then will flow through the hinge resume. This stop-go effect means that the hinge is being formed with chilled material while partially frozen surface moulded skins may be fractured. The result is a highly stressed and inferior hinge. Hesitation effects can be avoided by positioning the gate so that the box part of the moulding (or its equivalent in other hinged articles) fills completely as or just before the flow front reaches the hinge. In our example, the gate position A may seem like a good idea because it is closer to the flow restriction formed by the hinge, but it will cause hesitation in the hinge.

Sometimes the lid part or its equivalent needs its own gate because it is too big to be filled satisfactorily through the hinge. The box and lid gates must be positioned and the flow channels sized so that the weld line between them lies well to one side or the other of the hinge. On no account should the weld line occur in the hinge area. If the dual gate positions B are tidily arranged to fill the box and lid simultaneously, the result will be a weld line along the hinge.

Another difficulty can arise if excessive holding pressure is applied after mould filling. This can move and rupture material in the partially frozen hinge. It is a more extreme form of the hesitation effect and result again is a highly stressed and weak hinge. Two final points. Frictional heat is generated when the melt flows through the narrow hinge, so design a separate hinge cooling circuit in the mould for optimum process control. And immediately on ejection, manually flex the hinge a few times. This slightly stretches and cold draws the hinge, so increasing the molecular orientation and hence the hinge strength.

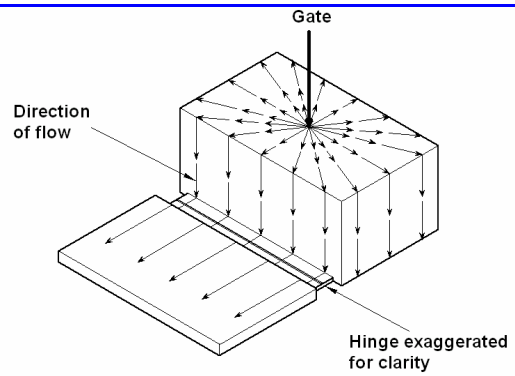

Injection flow must be across the hinge

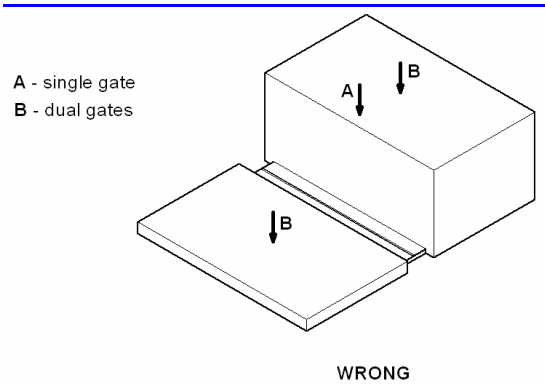

Gates must be positioned to avoid flow hesitations or weld lines in the hinge

DESIGNER'S NOTEBOOK

- Gate position is all important.
- Flow must take place across the hinge.
- Beware of hesitation effects, weld lines, and overpacking.
- Provide a separate hinge cooling circuit.
- Flex the hinge immediately after ejection.

7.1 BEARINGS

The bearing is a dynamic application of plastics; one where there is relative motion between the plastics and another component. Such bearings offer a number of advantages over the conventional type. The plastics bearing is shock and wear resistant, light in weight, damps down running noise and vibration, costs little, and requires little or no lubrication and maintenance.

Plastics bearings can take the form of plastics-to-plastics assemblies but the most common design uses a steel shaft running in a plastics sleeve bearing. The bearing may be machined or moulded, depending on the application and material. Some bearing materials, for example PTFE and PE-UHMW, do not lend themselves to conventional moulding processes and so are usually machined. Moulding produces a bearing with accurate dimensions and a fine surface finish without imposing any additional component costs, and so is much to be preferred. The moulded bearing can take the form of a bush that is fitted into another component, or can be formed integrally in the body of a moulding. This last solution is only feasible when it is economically and mechanically practical to make an entire component in the bearing material. The technique of 'outsert' moulding is particularly effective when a number of bearings are needed in a metal chassis or sub-assembly (see Part 19).

The performance of the bearing depends on a number of factors including temperature, running speed, bearing clearance, and the shaft characteristics. For steel shafts, the important characteristics are hardness and surface finish, in that order. The shaft should be as hard and smooth as possible; if the shaft is too soft, a very smooth surface will not prevent bearing wear.

The bearing capability can be calculated from the operating pressure and velocity. The operating pressure (P) is given by:

$$P = \frac{F}{LD}$$

where F = load on the bearing, L = bearing length and D = shaft diameter.

The sliding velocity (V) is derived from:

$$V = \pi DN$$

where N = rotational speed of the shaft.

Bearing wear (W) is proportional to operating pressure times sliding velocity, and is given by the expression:

$$W = K(PV)$$

where K is a wear constant known as the K-factor.

The K-factor is a good guide to wear performance but the factor does vary with the PV value, so calculations should be supplemented by prototype testing. A limiting value of PV is also used as a design parameter. The PV limit is the combination of bearing pressure and velocity beyond which the bearing is no longer wear resistant. The table gives representative values for K-factor and PV limit for common bearing materials. These values are for unmodified materials in contact with steel. Many bearing materials include lubricating and strengthening additives such as graphite, PTFE, molybdenum disulphide and glass. These can make a significant difference to the values, so obtain specific grade data before making design calculations.

Material	Limiting PV (MPa.m/min)	K-factor 10^{-13}(cm^3.min/m.kg.hr)
Polyamide PA6	4.8	23.7
Polyamide PA6/10	4.8	21.3
Polyamide PA6/6	5.8	3.6
Polybutylene terephthalate	6.3	24.9
Acetal	6.9	7.7

Typical figures for PV limit and K-factor

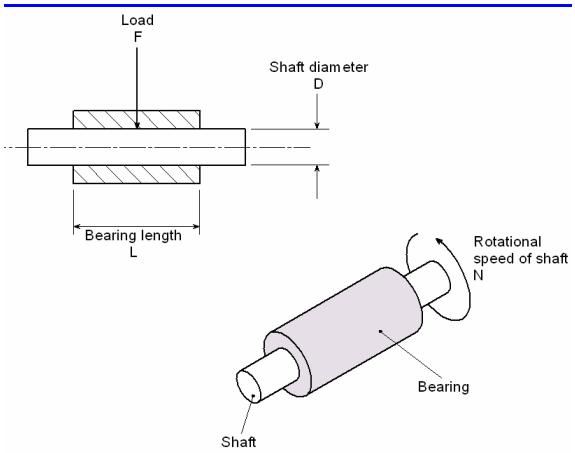

Key bearing features

DESIGNER'S NOTEBOOK

- For metal shafts, the harder and smoother the better.
- Keep within the PV limit.
- Use specific grade data for K-factor and PV limit.
- Except for slow-running and lightly loaded bearings, verify the design by testing prototypes.

7.2 BEARINGS

In the previous Design Guide we saw that the performance of a plastics bearing depends on the PV limit and the K-factor of the material. We gave typical values for common bearing materials but do bear in mind that PV and K values change significantly when lubricating and reinforcing additives are included in the plastics compound. For bearing design, you will need to get the actual values for the grade you are using, or for a close equivalent.

The ratio of bearing length to shaft diameter affects the generation of frictional heat in the running assembly. When the length is great compared with the diameter, heat may build up in the centre portion of the bearing. However, if the bearing is too short it begins to fail in its function of guiding the shaft, and there may also be retention problems if the bearing is of the press-in type. A good rule of thumb is to use a ratio of 1:1. In other words, set the bearing length dimension to be about the same as the shaft diameter. Of course, if the shaft runs only slowly or intermittently, frictional heating is unlikely to be a problem.

The next issue is to work out the wall thickness of the bearing. There are two general considerations. If the bearing is operating at a high PV value then heating may be a problem, so use a minimal wall thickness to help dissipate the heat. Conversely, if the assembly is likely to be subject to impact, use a thicker wall to resist shock. The graph gives a rough guide to a suitable bearing wall thickness for a range of shaft sizes. The graph is for general purpose bearing plastics in average circumstances. Remember that the strength of reinforced bearing materials can be much greater than that of unmodified materials.

Plastics bearings need greater running clearances than metal bearings, mainly due to thermal expansion. If we assume that the outside diameter of the bearing is constrained then any expansion will result in a reduction of the bore. Thermal expansion will occur if the bearing warms up when running and will also take place if the service temperature is significantly above normal room temperature. Other factors that can affect the running clearance are moulding tolerances and post-shrinkage, moisture absorption in polyamide bearings, and the compression effect when a separate bush is press-fitted in a rigid bore. As a guide, the diametral clearance between an assembled shaft and bearing should be in the range 0.3% to 0.5% of shaft diameter, and should never be less than 0.3%.

The total clearance needed before assembly will be this figure plus allowances for any of the other factors that apply. The temperature effect on the bearing wall thickness can be calculated by applying the coefficient of thermal expansion for the plastic to the temperature rise expected due to friction or the environment, whichever is the greater. The maximum compression effect in a press-fitted bearing is simply the maximum bearing outside diameter minus the minimum diameter of the bore that it is pressed into.

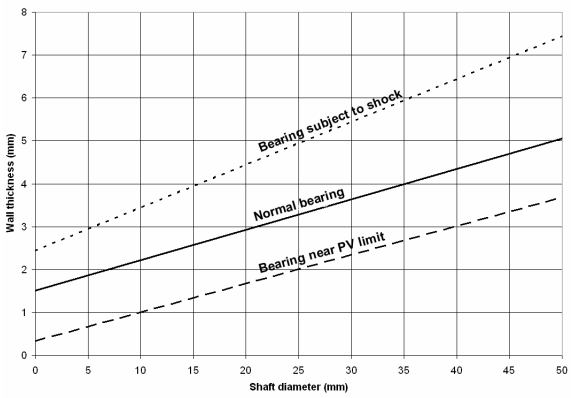

Bearing wall thickness as a function of shaft diameter

DESIGNER'S NOTEBOOK

- Keep the ratio of bearing length to shaft diameter close to 1:1.
- Bearing wall thickness can normally be in the range 2 mm to 5 mm for small to medium shaft diameters.
- Assembled diametral bearing clearances should not be less than 0.3% to 0.5% of shaft diameter.
- Consider whether the clearance needs to be increased to allow for temperature rises, moulding tolerances, post-shrinkage, moisture absorption, or press-fitting compression.

7.3 BEARINGS

So far we have looked at the mechanical factors affecting the performance of plastics bearings. These issues include PV limit, K-factor, length-diameter ratio, and clearances. Now let's see what effect physical design can have on performance. Of course, the wide scope for design variation means we must generalise. The effects we discuss will be more severe for higher running speeds and loads. Where bearings are slow running and lightly loaded there is naturally much more design latitude.

The materials of the bearing and shaft can have a big influence on wear. Soft metals such as mild steel and non-ferrous metals do not perform well as shafts in plastics bearings. This is true even for plastics with friction-reducing additives. The harder the shaft, the lower the wear. The shaft should also have a good surface finish but even a polished surface will not overcome the disadvantage of a shaft that is too soft. Some plastics-to-plastics combinations result in very low wear. The shaft hardness graph shows that an acetal/nylon pairing is much better than any acetal/metal combination.

The graph also demonstrates that wear begins gradually then accelerates rapidly. This happens when wear debris begins to act as a grinding medium. You can reduce the problem by providing somewhere for the debris to go. The simplest way is to design the bearing with grooves running in the axial direction. The groove width can be about 10 percent of shaft diameter and should be deep enough to accommodate wear particles with room to spare. Use at least three grooves, and more in a large diameter bearing. If the bearing wall would be weakened too much by grooves, you could use a series of through holes as an alternative. The holes should be staggered so that they sweep the full surface of the shaft. Through holes of course have the disadvantage that they are much more difficult to produce in a moulded bearing.

Never forget the difference between theory and practice. Calculations assume perfectly cylindrical bearings precisely aligned with the shaft so that loads are evenly distributed. This can be difficult to achieve, particularly when the bearing is an integral part of a larger moulding. If the bearing is in the form of an unsupported bush projecting from a moulding wall, there is a possibility that cantilever loads on the end of the bearing or deflection in the supporting wall will result in a slight misalignment. This means that the bearing load will be unevenly distributed and performance will suffer. Misalignment can be reduced or eliminated by supporting the bearing bush with ribs. However, this raises the risk that shrinkage in the ribs will distort the bearing bore from the perfectly cylindrical form. In this case, it may be necessary to mould the bearing bore undersize and machine out to the final accurate dimension.

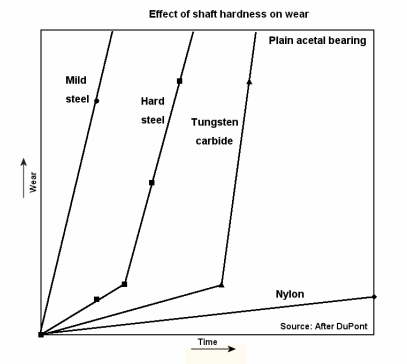

Hard metal shafts are better; plastics shafts are best

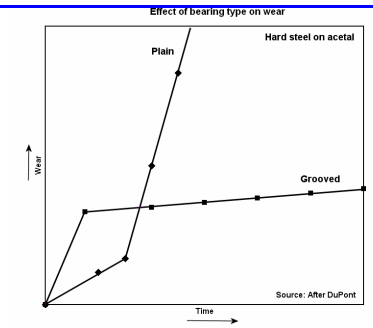

Grooved bearings last longer

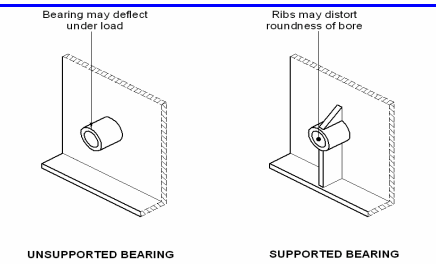

Design problems

DESIGNER'S NOTEBOOK

- Plastics bearings work best with hard shafts.
- Grooved bearings last longer.
- Use at least three grooves.
- Groove width should be 10 percent of shaft diameter.
- Support bearings adequately.

8.1 GEARS

Plastics gears have a number of advantages over the traditional metal gears. They are lightweight, run quietly, are resistant to corrosion, and operate with little or no lubrication. Perhaps the biggest benefit comes from the injection moulding process that makes it possible to produce a complex gear in a single rapid operation. The result is much cheaper than a machined metal gear. A moulded gear can also incorporate other integral features such as springs or cams; the metal equivalent would almost certainly be an assembly of separate parts.

Of course, plastics have disadvantages too. The precision, load-carrying capacity, and dimensional stability of plastics gears are generally inferior to those of metals. Both precision and stability are particularly affected by injection moulding so best practice is needed in component and mould design, in mould manufacture, and in process optimisation and control.

The most commonly used plastics for gears by far are polyamides (PA) and acetals (POM). They are not the only choices though. Thermoplastic polyurethane (TPU), polybutylene terephthalate (PBT), polyimide (PI), polyamideimide (PAI), coether-ester based thermoplastic elastomer (CEE TPE), and nylon blends are also used. The table lists the main pros and cons for gear applications of each material. Take the table as a rough guide but remember that properties vary significantly between the various types of polyamide, and with different grade formulations of all the materials. In particular, reinforcing and friction reducing additives can have a marked effect on performance.

Gears are precision elements. Inaccuracies will affect the smooth running and load carrying capacity of the gear train, so the plastics gear must be designed as far as possible to eliminate sources of inaccuracy. The general aim should be to attain symmetry while avoiding excessive variations in thickness. One approach is to base the gear proportions on a unit of tooth thickness. The gear ring bearing the teeth is connected to the hub by a web. The symmetry of this web is important to the accuracy of the moulded gear. An off-centre or one-sided web is likely to result in a distorted gear. Similarly, it is better to avoid reinforcing the web with ribs, or reducing its weight with perforating holes or spokes. All are likely to set up differential shrinkages that will take the gear teeth out of round.

Material	Advantages	Disadvantages
PA	Good abrasion and fatigue resistance.	Dimensional stability affected by moisture absorption and post shrinkage.
POM	Good abrasion resistance. Lower moisture absorption than PA. Good resistance to solvents.	Poor resistance to acids and alkalis. High shrinkage.
PU TPE	Good abrasion and tear resistance. Resistant to oil. Good energy absorption.	High hysteresis leading to excessive heat generation during fatigue loading. Continuous use temperature limited to 70℃.
PBT	Withstands continuous service at 120℃. Good combination of stiffness and toughness.	High shrinkage and prone to warping. Notch sensitive.
PI	High wear resistance. Heat resistant up to 260℃. Unaffected by radiation.	Low impact strength. Poor resistance to acids and hydrolysis. Expensive.
PAI	High strength and wear resistance. Operating temperature up to 210℃.	Attacked by alkalis. Expensive.
CEE TPE	Good abrasion resistance. Effective at low service temperatures down to -60℃.	Sensitive to hydrolysis at elevated temperatures.
PA/ABS	Better impact strength than unmodified PA.	Lower maximum operating temperature than unmodified PA.

Gear thermoplastics compared Source: Based on 'The Plastics Compendium – Volume 1', MC Hough and R Dolbey, Rapra Technology, 1995.

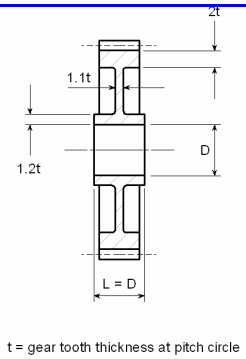

Suggested proportions for gears

Source: After DuPont

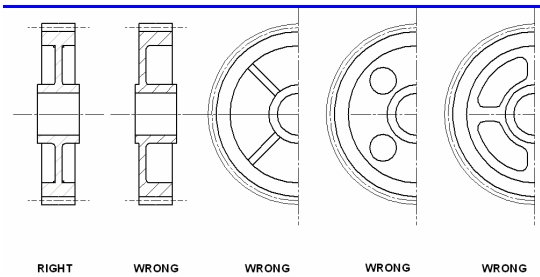

Avoid features that could distort the gear form

DESIGNER'S NOTEBOOK

- Consider conditions of service before selecting the material.
- Design for symmetry and avoid excessive variations in thickness.
- Make the centre web symmetrical and avoid ribs, spokes and holes.

8.2 GEARS

A significant cause of distortion in moulded gears is flow in the cavity and this depends on the gate position. The shrinkage value of plastics tends to differ with and across the direction of flow so the aim must be arrange for flow to be symmetrical as well. Melt flow should reach all points of the toothed gear periphery at the same time and pressure. This means that the ideal is a single gate in the centre of a web across the shaft hole.

This is perfect for a gear positioned on the end of a stub shaft but most gears use through shafts and this will involve a secondary finishing operation to remove the web. This is usually undesirable, so most gears are produced with compromise gating. Hot runner or three-plate pin gates can be positioned either in the hub or gear web, and the more of them there are, the more nearly will the flow approximate to central gating. There should not be less than three equi-spaced gates; more may be possible on larger gears. There will be weld lines between these gates, so gating in or close to the hub will give stronger weld lines in the hub. This is important because torque from the shaft is transmitted to the gear teeth through the hub. On no account should gears be gated asymmetrically. The result is sure to be a component that is out of round. Gating into the gear teeth also presents a finishing problem and should be avoided at all costs.

Once the basic component form and gating is under control, the next step is to determine the allowable tooth bending stress. This is affected by service conditions. Key factors include service life, operating environment, tooth size and form, pitch line velocity, and whether operation is continuous or intermittent. The pitch line velocity (PLV) is the linear velocity at the pitch circle diameter of a running gear and it can be calculated from the expression:

$$PLV = \frac{\pi D n}{60000}$$

where D is the pitch circle diameter (mm), n is the gear rotational speed (RPM) and PLV is given in metres per second. The relationship between PLV and gear tooth bending stress been determined empirically by DuPont from a study of successful gear designs. The graph is based on acetal and nylon gears operating at room temperature.

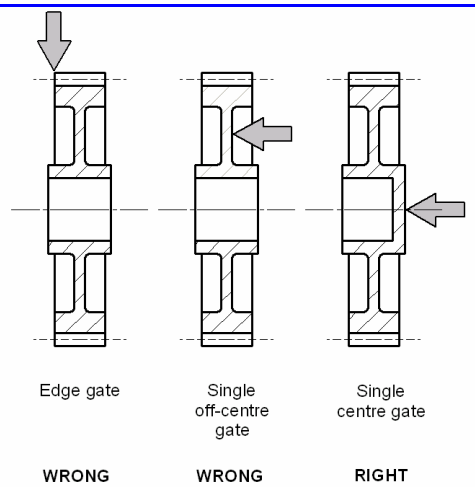

Avoid edge gates and off-centre gates

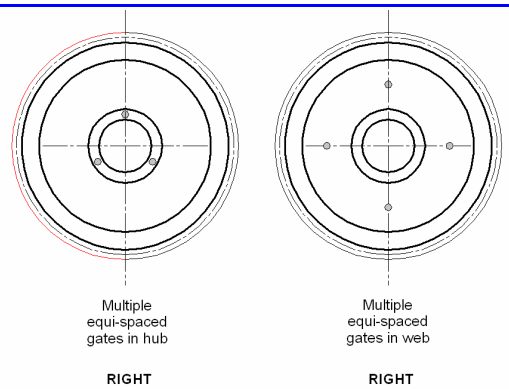

Use multiple symmetrical gates when a central gate is not practical

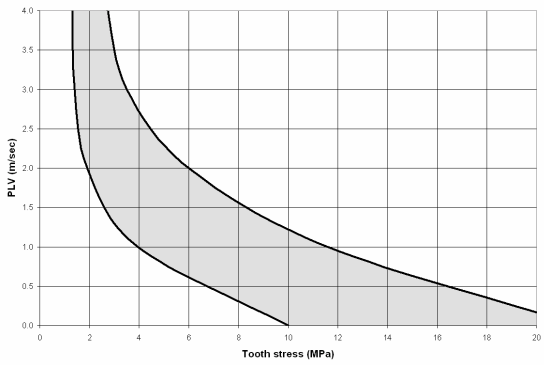

Empirical design range for gear tooth stress versus PLV

Source: After DuPont

DESIGNER'S NOTEBOOK

- Gate the gear at the centre if possible.
- Otherwise use at least three symmetrical gates on the hub or in the web.
- Keep the tooth bending stress within allowable limits relative to the pitch line velocity.

8.3 GEARS

The allowable gear tooth bending stress depends on the PLV and the tooth size (or diametral pitch) - see Section 8.2 - but it is influenced by a number of external factors. Some of these are environmental and include dimensional changes due to temperature or humidity, the operating environment itself, and the presence or absence of lubrication. Lubrication may be external in the form of an oil or grease, or internal by means of low-friction additives in the plastics material used to form the gear. Service conditions, for example the material of the meshing gear and whether running is intermittent or continuous, also have a bearing on allowable gear tooth bending stress. So too does the design life of the assembly. Clearly, a higher stress can be tolerated over a shorter life.

The load (F) normal to the tooth at the pitch circle diameter (D) is a function of the torque (T) transmitted through the shaft. For a spur gear:

$$F = \frac{2T}{D}$$

We also need to know the gear module (M). If (n) is the number of teeth on the gear, then:

$$M = \frac{D}{n}$$

Then the bending stress (S) on the tooth can worked out from:

$$S = \frac{F}{MfY}$$

where f is the face width of the tooth and Y is a tooth form factor.

The tooth form factor depends on the tooth pressure angle and the number of teeth on the gear. For a typical plastics spur gear, the value of Y is in the region of 0.6 and in that case, the equation for tooth bending stress becomes:

$$S = \frac{1.7F}{Mf}$$

If F is measured in Newtons, and the values of M and f are given in millimetres, then S will be calculated in megaPascals (MPa). This value of S is the actual tooth bending stress. We now need to adjust the figure to take account of fatigue, temperature, and shock loads.

The adjustment for fatigue is based on the fatigue strength at one million (10^6) cycles.

Of course, the fatigue strength varies greatly according to the material grade, particularly for reinforced types. To carry out working design calculations, you will need to get the grade fatigue strength value from the material supplier. The table gives rough guide values for typical unfilled grades.

Material	Fatigue strength (MPa) at 10^6 cycles. Continuously lubricated	Fatigue strength (MPa) at 10^6 cycles. Initially lubricated
PA	20-35	8-12
POM	35-45	20-25
PBT	15-20	6-8

Sources: DuPont and Plastics Design Library

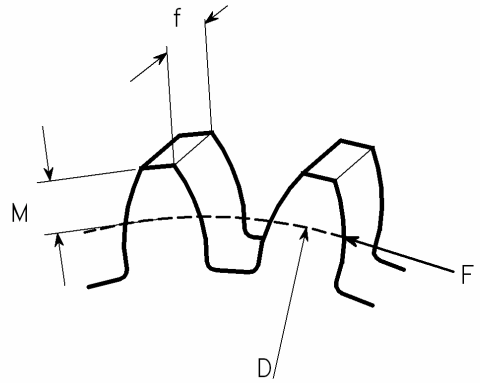

Gear tooth terms

Warning - External lubricants pose a risk when used with thermoplastics because they may cause environmental stress cracking (ESC), particularly with amorphous thermoplastics. ESC is the most common cause of failure in plastics products, so avoid external lubricants unless absolutely necessary. If you must use them, do so only after checking the risk with the materials manufacturer or conducting extensive testing.

DESIGNER'S NOTEBOOK

- The stress on the gear tooth depends on torque, speed and tooth size.
- The stress is influenced by external environmental factors.
- The allowable stress is determined by adjusting the theoretical stress for fatigue, temperature and shock.
- Consider environmental stress cracking before lubricating plastics gears.

8.4 GEARS

The theoretical tooth bending stress (S) must lie within the limit for the material. This limit is not the theoretical strength value but a lower value representing the practical or allowable stress limit. This can be calculated by making adjustments for fatigue, temperature, and load conditions. Previously, we gave typical fatigue strength guide values for unfilled gear materials at 1 million cycles but the design may be for a different number of cycles. If at all possible, get fatigue values measured or interpolated for the number of cycles you need, and use these in the calculation. Otherwise you can approximate the value by applying a correction factor taken from the fatigue correction graph.

For example, if the fatigue strength of initially lubricated acetal (POM) at 1 million (1.0E+06) cycles is 25 MPa, the value at 1.0E+07 cycles would be that figure multiplied by a correction factor of 0.78 taken from the graph at the 1.0E+07 intercept. In other words the figure drops to 19.5 MPa.

The second correction we need to make is for temperature. The correction factor can be read from the temperature correction graph and used in the same way.

The final correction is for shock loads. The correction factor lies between 0.5 and 1.0 and the table gives values for three broadly defined service conditions. If you are not sure about shock loads in service, design for a more severe condition.

Loading	Shock load factor (k_s)
No shock	1.0
Medium shock	0.75
Heavy shock	0.5

We arrive at the allowable stress by multiplying the theoretical figure by correction factors for fatigue (k_f), temperature (k_t) and shock (k_s). Let's illustrate that by working out the allowable stress for polyamide at 50℃ and 10 million cycles, under medium shock conditions. The theoretical value of S in this case is 10 MPa. The allowable value of S becomes:

$$S = 10 \times 0.78 \times 0.8 \times 0.75$$

The result is 4.68MPa, a very significant drop from the theoretical figure. Now we can put the new value to use in calculating the tooth load (F) that can be sustained by a gear. Imagine a spur gear with 30 teeth (n), a width (f) of 8 mm, and a pitch circle diameter (D) of 25 mm. If we solve our original equation for F, we get:

$$F = \frac{S.M.f}{1.7} \text{ where } \quad M = \frac{D}{n}$$

So for our example:

$$F = \frac{4.68 \times \left(\frac{25}{30}\right) \times 8}{1.7}$$

So the sustainable load is 18.35 Newtons. The conditions experienced by loaded running gears are complex and calculations alone will not guarantee success. What they will do is ensure that the design is in the area of feasibility. If the gear runs in critical applications, or at high speeds or loads, or at elevated temperatures, you should test prototypes to prove the design.

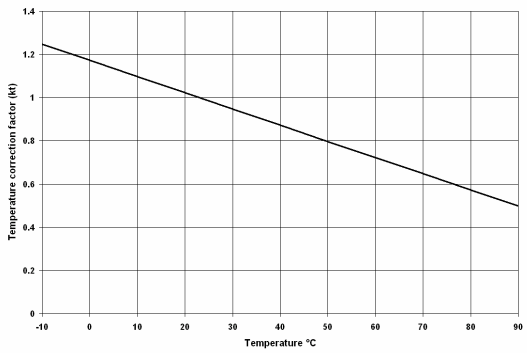

Temperature correction factors
Source: After DuPont

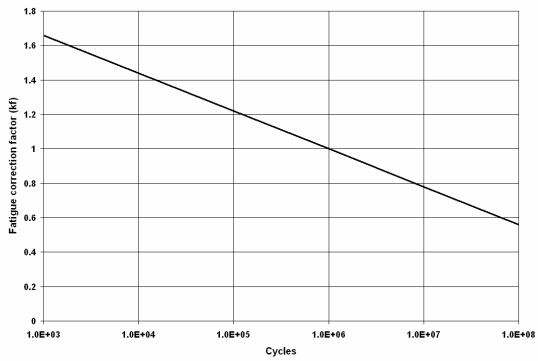

Fatigue correction factor (k_f)
Source: After DuPont

DESIGNER'S NOTEBOOK

- The allowable stress is determined by reducing the theoretical stress to allow for fatigue, temperature and shock.
- Remember that correction factors are approximations, so do not design to the limit of the calculations.
- If possible, use measured or interpolated fatigue values rather than corrected values.
- If possible, use fatigue values quoted by the manufacturer for your specific grade of material.
- For critical applications, prove the design by testing.

8.5 GEARS

Gears work in pairs to transmit torque from one axis or shaft to another. Spur or helical gears are used when the shafts are parallel and this is perhaps the most familiar arrangement but not the only one. When the shafts intersect, motion can be transmitted through bevel gears. Shafts that are neither parallel nor intersecting can be connected by hypoid gears, crossed helical gears or by a worm and worm gear.

The worm and worm gear is useful when a large speed ratio is needed, and has the unusual property of transmitting motion in one direction only, from worm to worm gear. But there is a major drawback. Spur, helical and bevel gears operate in rolling motion but the worm and worm gear work together almost entirely in sliding contact. This is mechanically less efficient and requires a different design approach.

The sliding motion creates more friction and wear, and generates more heat from the transmission of mechanical energy. Consequently, moulded worms and worm wheels should be made from grades containing low-friction or lubricating additives. Low wear characteristics are also important. External lubrication may be needed too but first ensure that the lubricant is not a stress-cracking agent for the plastic.

It is best to pair different materials for the worm and worm gear. You can use dissimilar plastics or a combination of plastics and metal. If frictional heat is a problem, dissipation can be much improved by using a metallic worm running with a plastics worm wheel. The table outlines some common material pairings.

Worm material	Gear material	Applications
Hardened steel	Acetal	Good wear resistance. Suitable for medium-power mechanical devices.
Brass or zinc alloy	Acetal	Good wear resistance. Suitable for small mechanical devices.
Nylon	Acetal	Good unlubricated performance. Suitable for low-speed lightly-loaded applications.
Acetal	Acetal	An unfavourable combination giving high friction and wear. Use only in slow-running applications where the load is very light.

Source: After DuPont

The tooth form of the worm is stronger than that of the worm gear, so it is the gear that is the limiting factor in design. The point contact results in a higher stress concentration than that of spur gears, so the design calculation should include a high safety factor in the range 3 to 5.

Worm gears are difficult to produce by moulding because the concave tooth form creates an undercut. If the concavity of a nylon worm gear is slight, it may be possible to spring the undercut, otherwise more complicated measures are needed. One possibility is to use a series of side actions to free the undercut. It is difficult to use this method in a multi-cavity mould, and adds greatly to the mould cost. A simpler way is to remove the undercut by modifying the worm gear tooth to a half-round form. However, this reduces the tooth contact area and hence the load carrying capacity of the gear.

A more elegant solution is to mould the worm gear in two mating halves which are assembled to create the complete gear. This requires precision tooling and precisely designed mating features to ensure that the gear forms match exactly. The gear halves can be assembled normally but if welding is used, the melt area must be kept away from the tooth form to eliminate any risk of flash.

If the worm itself is to be a moulded part rather than a metal component, there may also be complications. In principle, a worm can be produced in a simple 2-part cavity although the split line match will need to be perfect if the worm is to run well. In practice, if the worm lead angle exceeds the pressure angle, the cavity will be undercut. The best solution for a moulded worm is always to use an unscrewing mould.

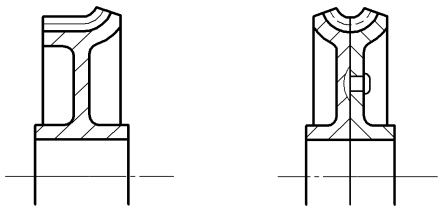

Half-round worm gear Two-piece worm gear

DESIGNER'S NOTEBOOK

- Use dissimilar materials for the worm and worm wheel.
- Use a metal worm if frictional heat is likely to be a problem.
- The worm gear is the design limiter.
- Use a high safety factor of 3 to 5.
- Consider producing the worm gear in two parts.
- Use an unscrewing mould to produce a worm.

9 PRESS FITS

When one object such as a shaft is assembled to another by forcing it into a hole that is slightly too small, the operation is known as press fitting. Press fits can be designed between similar plastics, dissimilar plastics, or more commonly between a plastic and a metal. A typical example occurs when a plastics hub in the form of a control knob or gear is pressed on a metal shaft. The position is reversed when a plastics sleeve or bearing is pressed into a metal bore.

Press fits are simple and inexpensive but there are some problems to look out for. The degree of interference between the shaft and the hole is critical. If it is too small, the joint is insecure. If it is too great, the joint is difficult to assemble and the material will be over-stressed. Unlike a snap fit, the press fit remains permanently stressed and it is the elastic deformation of the plastics part that supplies the force to hold the joint together. When plastics materials are exposed to permanent stress the result is creep. This means that as time goes by, the force exerted by the press fit becomes less, although not necessarily to a significant extent. There are two other pitfalls for press fits. Manufacturing tolerances on the shaft and hole must be taken into account to see whether the two extreme cases remain viable. And when the joint is made between dissimilar materials, an increase in temperature will change the degree of interference between the parts. Remember too, that at elevated temperatures the effect of creep will be greater.

One way of countering the effect of creep in a shaft and hub press fit is to provide a straight medium knurl on the metal shaft. The plastics hub material will tend to cold flow into the grooves of the knurl, giving a degree of mechanical interference between the parts. The frictional effect is also greater because the surface area of the joint has been increased by the knurl.

When designing a press fit, we need to work out the correct amount of interference between the parts. Basing the calculation on classical theory for thick-walled cylinders, we can derive the following equation for the allowable diametric interference (Y) for a metal shaft in a plastics hub:

$$Y = \frac{Sd}{K}\left(\frac{K + v_{Hub}}{E_{Hub}}\right)$$

where S = design stress, v = Poisson's ratio, E = elastic modulus, K = geometry factor.

The geometry factor K can be calculated from:

$$K = \frac{1 + \left(d/D\right)^2}{1 - \left(d/D\right)^2}$$

The force (W) needed to press the parts together can be worked out from this equation:

$$W = \frac{Sdl\pi\mu}{K}$$

Where:

μ = coefficient of friction and

l = length of engaged surfaces.

Values for Poisson's ratio and coefficient of friction were given earlier in the Design Guide series.

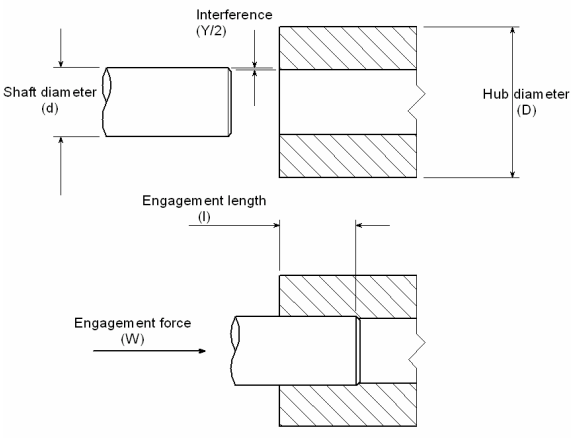

Press fit parameters

DESIGNER'S NOTEBOOK

- Consider the effect of part tolerances and creep.
- Consider the effect of temperature changes between dissimilar materials.
- If the press fit will be used at elevated temperatures, verify the design by testing prototypes.
- If you are still worried about creep, try knurling the metal shaft.

10.1 SNAP FITS

In Design Guide 4, we looked at bosses used with thread-forming screws as a means of joining or assembling plastics parts. There are many other ways of achieving the same object, for example by welding, adhesives, staking and snap-fits. But of all these methods, the snap-fit is perhaps the most elegant way of joining plastics parts together.

Snap-fits involve pushing a projection on one part past an obstruction on a mating part. They rely entirely for their effect on the elasticity of plastics. Generally, one part is more or less rigid while the other part is flexible or resilient. Depending on the design, the joint can be permanent or releasable. Both parts can be plastics - either the same or different types, or one part can be a foreign material such as a metal shaft or a laminated circuit board.

There are three principal types of snap-fit:

- the cantilever snap-fit, also known as a snap hook, catch spring, spur, or lug
- the cylindrical or ring snap-fit
- the spherical snap-fit

A further type, the torsional snap-fit, is not so common and may be regarded as an alternative to the snap hook; one in which the elastic action of the catch is supplied by placing a plastic member in torsion rather than flexure.

The cantilever, cylindrical, and spherical types share common basic principles. In each case, the joint is assembled by applying a force (F) to bring the parts together. When they meet, joining is opposed by an interference (y) between the parts. When the force is sufficient, an elastic deflection that is equal to the interference allows the parts to come together. The design of the snap-fit is such that the deflection is wholly or substantially released once the interference points have passed and the parts have come together.

For the cantilever type, the deflection is a simple bending or flexure of the lug. By contrast, both the cylindrical and spherical types require an elastic radial expansion. Mechanically, the cylinder and sphere are much stiffer structures than the cantilever, so the interference dimension is usually smaller. You may also see these types provided with a number of radial slots to make expansion easier. In effect, they have now become a set of snap hooks arranged in a circle.

Earlier, we described snap-fits as elegant. By this we mean that they are efficient, virtually free of charge, and 'green'. The snap-fit features can be designed as an integral part of the moulding without any increase in cycle time and at the expense of only a small increase in mould cost and maintenance. Assembly can be performed with little or no tooling using almost no energy, and without the need to purchase and stock additional parts such as screws, clips, or adhesives. Additionally when the time comes to recycle the part, there are no foreign materials to be removed before granulating.

For these reasons, snap-fits are likely to become an even more popular design feature in plastics assemblies of the future. Success or failure depends on the detail and in following guides we will set out the design principles.

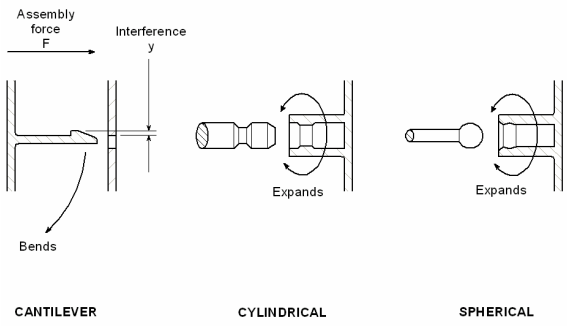

The principal snap-fit types

DESIGNER'S NOTEBOOK

- Snap-fits work by using the elasticity of plastics.
- The three main types are cantilever, cylindrical, and spherical.
- Joints can be permanent or releasable.
- Snap-fits are cheap, efficient and 'green'.

10.2 SNAP FITS

In the previous design guide, we looked at the general principles of snap-fits. Now let's examine the most popular type - the cantilever or hook - in more detail. The cantilever type clicks or snaps into engagement when it is pushed past a catch on a mating part. The hook has a tapered face with a shallow engagement angle to help it past the obstruction. A releasable snap hook has a second tapered face set at a release angle to allow it to be removed again. The release angle is greater than the engagement angle, to make release relatively difficult. If release is too easy, the snap-fit will not act as a reliable fastener. When the release angle approaches 90 degrees, removal by pulling is virtually impossible and the snap-fit becomes a permanent joint.

When the cantilever hook is pushed past the catch, it is forced to flex. The amount of deflection is equal to the interference between hook and catch, and this must be kept to a dimension that does not exceed the allowable strain for the cantilever material. The table shows approximate design data for a range of unfilled materials. The allowable strain figures are for a snap-fit that is used just a few times. If it is to be used once only, the strain figures can be doubled. The figures in the table should be taken as a guide only. For accurate design, you will need to get grade-specific figures from your materials supplier.

For a snap hook with a constant cross section, the maximum deflection Y can be worked out from this equation:

$$y = \frac{el^2}{1.5t}$$

The equation assumes that only the snap hook flexes. In many cases, the moulding face that it is attached to will also flex a little. This can be regarded as a safety factor. If the hook mounting is rigid, then you should reduce the calculated maximum deflection by a safety factor.

The normal force P needed to move the snap hook through deflection y comes from this equation:

$$P = \frac{wt^2Ee}{6l}$$

This result can be used to work out the force W needed to engage the snap fit with the catch.

$$W = P\frac{\mu + \tan a}{1 - \mu \tan a}$$

In the case of a releasable snap hook, the same formula can be used to work out the release force by substituting the release angle b for the engagement angle a. If the release force approaches the tensile strength of the snap hook, then it is likely to break as you try to release it. Similarly, the catch will shear off if its cross-section is too weak compared with either the engagement force or release force. Of course, if the snap hook is properly designed, the release force will always be the greater, even in a releasable design.

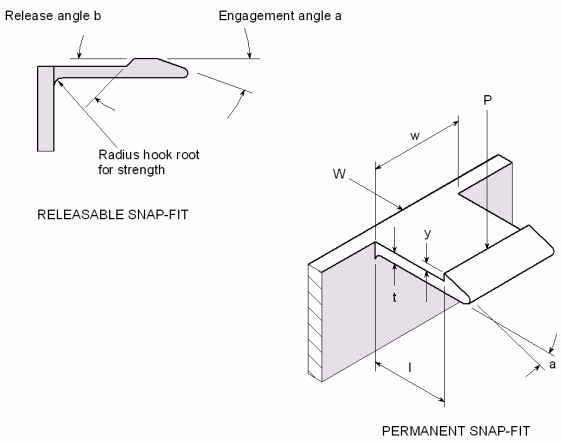

Snap-fit dimensions and forces

Material	Allowable strain (e) (%)	Flexural modulus (E) (Gpa)	Coefficient of friction (μ)
PS	2	3.0	0.3
ABS	2	2.1	0.2
SAN	2	3.6	0.3
PMMA	2	2.9	0.4
LDPE	5	0.2	0.3
HDPE	4	1.2	0.3
PP	4	1.3	0.3
PA	3	1.2	0.1
POM	4	2.6	0.4
PC	2	2.8	0.4

DESIGNER'S NOTEBOOK

- Keep within the allowable strain figure.
- If the calculated allowable deflection is too small, try increasing the snap hook length.
- Design so that the snap hook is no longer flexed after it has clicked into the catch
- Snap-fits are meant to be used either once or just a few times, so fatigue and wear can be neglected.
- Radius the root of the snap hook to reduce stress concentration.

10.3 SNAP FITS

The cylindrical or ring snap-fit has a continuous internal undercut that is engaged by a groove on a shaft. It is often used to retain a plastics part such as a knob on a metal shaft but it can also be used to secure two plastics parts together. Like other snap fits the joint can be designed to be releasable or permanent depending on the slope of the release angle. When the joint is inserted or released, the hub is forced to expand elastically. This makes for a spring that is inherently stiffer and stronger than the cantilever hook type of snap fit. Strength is usually an advantage but there are some drawbacks too. The insertion force can be quite high and it is often necessary to make the undercut relatively small. The hub works best when it is moulded in a comparatively elastic material, not least because it must be ejected off an undercut core in the mould. This means that stiff glass-filled and other reinforced grades may not be suitable for the ring snap fit.

The stiffness of the hub spring depends not only on its thickness but also on its free length and crucially on how close the undercut is to the free end. Ring snap fits should always be designed with the undercut reasonably near the hub free end, otherwise the stiffness of the spring will significantly greater and the joint may fail.

Assembly of the joint is made easier by providing a draft or engagement angle on the end of the shaft . An angle of 20° to 30° works well. The release angle determines how easily the snap fit can be disengaged. The greater the angle, the harder it is to release. An angle of 40° to 50° is usual. Use a greater angle if you want the joint to be permanent.

The diagram shows the key features for a cylindrical snap-fit. The maximum allowable undercut can be worked out from this equation:

$$y = \frac{Sd}{K}\left[\frac{K + v_{hub}}{E_{hub}} + \frac{1 - v_{shaft}}{E_{shaft}}\right]$$

where S = design stress, v = Poisson's ratio, E = Modulus of elasticity and K = geometry factor.

The geometry factor K can be calculated by:

$$K = \frac{1 + \left[\frac{d}{D}\right]^2}{1 - \left[\frac{d}{D}\right]^2}$$

The table gives approximate values for Poisson's ratio for a range of unfilled materials. For accurate design, you will need to get grade figures from your materials supplier.

The expansion force exerted on the hub is given by the equation:

$$P = \frac{[\tan a + \mu] S_y dl\pi}{K}$$

where μ = coefficient of friction and S_y = stress due to interference. Values for the coefficient of friction were listed in the previous Design Guide.

Material	Poisson's ratio v
PS	0.38
PMMA	0.40
LDPE	0.49
HDPE	0.47
PP	0.43
PA	0.45
PC	0.42
PVC	0.42
PPO	0.41
PPS	0.42
Steel	0.28

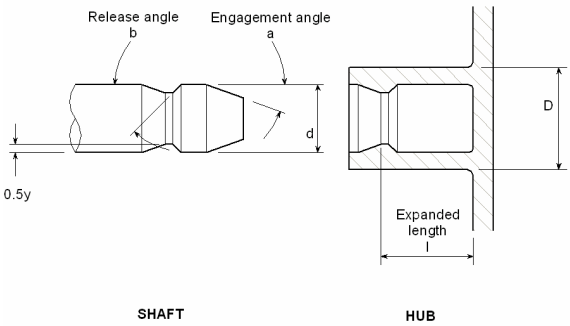

DESIGNER'S NOTEBOOK

- Don't use cylindrical snap-fits with very stiff materials.
- Use an engagement angle of 20° to 30° and a release angle of 40° to 50°.
- Place the undercut near the open end of the hub.
- Size the undercut so that the design stress figure is not exceeded.

10.4 SNAP FITS

As its name implies, the torsion snap-fit relies for its spring effect on twisting rather than flexing like the other types. It is less common than cantilever or ring snap-fits but it is particularly useful when you want to be able to release the catch easily and often. For example, a torsion snap fit can be a good way of fastening a hinged lid on a box or container.

The torsion snap-fit catch is moulded with integral supporting shafts on which it twists when an opening force is applied. The design often includes a dimple or some other feature to indicate the right place to press. The principle of levers applies, so depending on the dimensions of the catch it is possible to arrange for a small opening force to overcome quite a strong snap-fit. The catch portion is relatively stiff compared to the integral shafts so that when the opening force is applied to the catch the shafts are twisted in torsion and it is this that supplies the spring effect. The stiffness of the spring depends on the thickness and length of the shafts. Ideally the shafts will be cylindrical as this is the most efficient form for torsion but other shapes can be used. The torsion snap fit can lead to some mouldmaking complications and in these circumstances it may be easier to use square or cruciform section shafts.

The degree of twist or torsion on the shafts should be kept to the minimum necessary to clear the snap fit undercut. It is usually possible to arrange the design so that the catch meets an obstruction just after the undercut has been released. This prevents the catch being broken by an over-enthusiastic user. The minimum angle in radians that the catch must be moved through is:

$$x = \frac{\pi y}{180a}$$

where y = catch undercut and a = length of catch lever.

The general formula for torsion in cylindrical shafts is:

$$x = \frac{2Pal}{E\pi r^4}$$

where P = force to free undercut, l = shaft length, E = modulus of rigidity and r = shaft radius.

From these two equations we can deduce that:

$$P = \frac{\pi^2 r^4 E y}{180 a^2 l}$$

And now, by applying the principle of levers, we can work out the opening force W thus:

$$W = \frac{Pa}{b}$$

where b = length of opening lever.

So by making *b* relatively large compared to *a*, we can arrange for the opening force to be quite small. Be careful how you do this though. If *a* is made too small, the angle of twist x becomes too great.

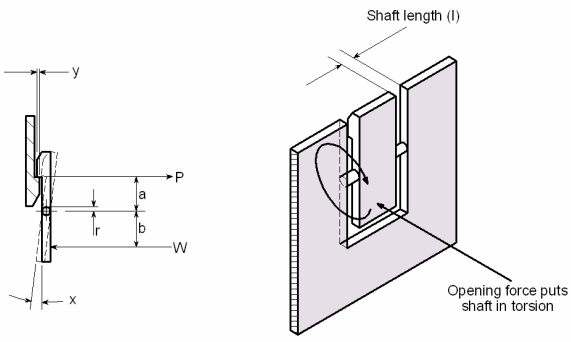

Main features of torsion snap-fits

DESIGNER'S NOTEBOOK

- Use torsion snap-fits when you want to be able to release the catch easily.
- Include a design feature to show where to press.
- Design a stop feature to prevent excessive torsion.
- Do not make the catch lever length too short otherwise the twist angle and torsion becomes too great.
- Reduce the opening force by making the length of the opening lever longer than the catch lever.

11.1 HOT STAKING

Most plastics mouldings today form part of an assembly, and there is a need to secure one moulding to another or to attach other components. An attractive alternative to thread-forming screws, press fits, and snap fits for thermoplastics is heat staking. Simply put, this involves thermally softening a stake that is an integral part of the moulding, then forming a rivet-like retaining head under pressure from a cold tool. Heat staking is the generic name of the method. Commonly the heat source is hot air, giving rise to the name hot air staking.

The process has a number of advantages. The stake is a part of the moulding; due to its small size and simple form, it adds almost nothing to part cost or mould cost. And because it is an integral part, it does away with the need to purchase and stock separate fasteners. This also simplifies recycling; there are no foreign materials to remove and sort. In these respects, hot staking resembles the use of snap fits for assembly. However, many snap fits can be released and re-made but heat staking is a permanent method of assembly.

Hot air staking is a two-step process. First, the stake is heated by hot air directed through a tube or manifold. The air temperature is in the range 150℃ to 400℃. The air is delivered as a current rather than a blast and is localised by bringing the manifold close to the target stake. The area of the manifold aperture should be about 25% greater than the area to be heated. When the stake has reached forming temperature (softening point), the heat source is withdrawn and the rivet head is formed by advancing a cold forming tool under sufficient force to shape the stake and consolidate the components to be joined. The forming tool is removed when the rivet head has cooled sufficiently to sustain the joint.

From a mechanical point of view, the number, size and position of rivets necessary to form a joint depends on the allowable working stress of the material and the force to be exerted on the joint. However, more rivets may be used in some circumstances, for example, to hold down a weak or flexible sheet materials.

Some general rules and proportions for stake design can be given. Because the thermal conductivity of thermoplastics is poor and the stake is heated from the outside only, it is better to have more small stakes than a few very thick ones. The heat distribution in thick stakes can be improved by adding a V-shaped dimple that increases the heat transfer surface area. To simplify assembly, the stake clearance hole in the component to be riveted should be 10% greater than the stake diameter. The forming height of the stake must be sufficient to form the rivet head but should not be excessive otherwise there will be a tendency to distort during heating. The forming height can be calculated by multiplying the stake diameter (d) by a factor (k). The graph gives suggested factor values for a range of stake sizes.

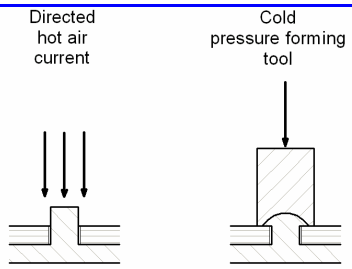

Hot air staking is a two-step process

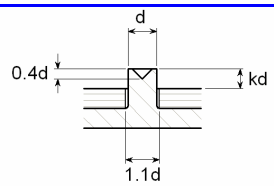

Recommended stake proportions

Source: After Phasa Developments

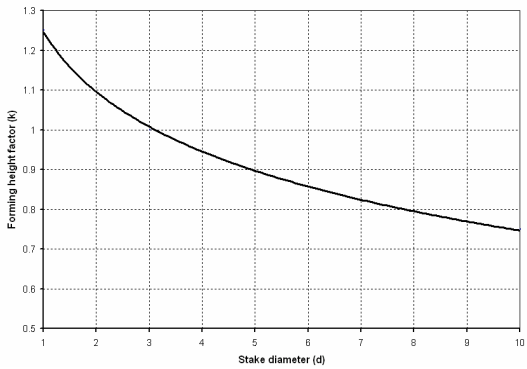

Stake forming height factor

Source: After Phasa Developments

DESIGNER'S NOTEBOOK

- Hot air staking is an economical fixing method that simplifies recycling.
- Joints are permanent.
- More small stakes are better than a few thick ones.
- Keep the stake forming height to the recommended limit.

11.2 HOT STAKING

The hot air staking process resembles riveting and is used for making permanent joints with thermoplastics. We now look at the forming tool used to create the 'rivet head' and examine some of the joints that can be produced by this method.

The head is formed under pressure from a cold metal forming tool after the plastics stake has been heated to softening point by a current of hot air. The tool material is not critical. Unhardened or pre-toughened tool steel is usual although a hardening forming surface may be used to minimize wear when forming abrasive glass-filled grades. The shape of the forming tool determines the shape of the rivet head. The volume of the forming tool cavity should be slightly less than that of the free forming portion of the stake. This creates a compacting pressure and ensures a fully formed head. A slight bead of excess material will appear at the perimeter of the rivet head; this can be reduced by slightly increasing the tool forming cavity volume or reducing the volume of the free formable portion of the stake. Alternatively, start with a slightly excessive volume in the tool and gradually reduce it by grinding off the face of the tool.

The forming tool will not usually force excess stake material into the clearance between the stake and the object to be retained, provided this is within the range recommended in the previous design guide. As a reminder, the clearance hole should be about 10 percent greater than the stake diameter. This means that hot air staking will not normally provide an absolute means of locating the staked object laterally. If this is important, other registering features should be designed to locate the object.

If the clearance hole is made much greater than 110 percent of the stake diameter, some material may be forced into the clearance. This material has been robbed from the rivet head and while it may provide some lateral location, it will be at the expense of the head strength and clamping force.

A flush finish on the assembly can be produced by means of a countersunk head. A 90 degree countersink provides an efficient heating effect. In this case, the forming tool requires a recess of relatively small volume because virtually all the forming portion of the stake is forced into the countersink. The forming tool carries a shallow concave recess and is designed to seat within the countersink at a point just below the surface plane. Because the formed stake takes up the shape of the countersink, this type provides better location of the staked object.

With ingenuity, the process is adaptable to a wide range of assembly tasks. For example, stand-off stakes can be used to support a chassis plate or printed circuit board. Buttress ribs will give more support to the plate or board while also strengthening the stake itself. Alternatively, you can use a much larger stake with a central coring hole. This design heats up very efficiently. Staking is achieved by rolling over the annular end of the stake with an appropriately formed tool. Rollover staking can also be used to secure springs, bearings, bushes and inserts. The same principle can be applied to non-circular or irregular perimeters to retain plates or mirrors. Fragile or delicate objects will benefit from a protective gasket at the staked perimeter.

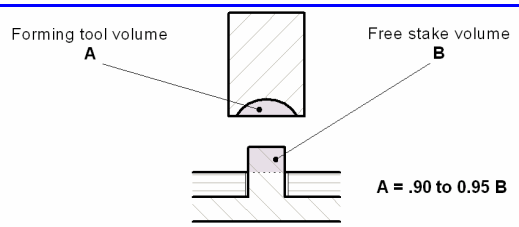

Forming tool volume should be slightly less than free stake volume

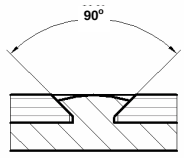

Countersink heat staking

Source: After Phasa Developments

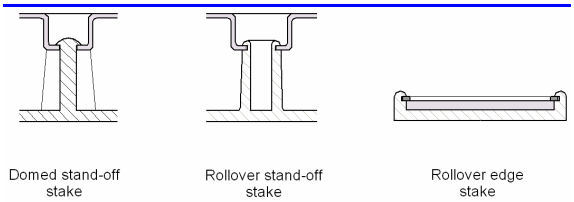

Heat staking handles many assembly tasks

Source: After Phasa Developments

DESIGNER'S NOTEBOOK

- The forming tool volume should be slightly less than the free stake volume.
- Lateral location requires special attention.
- Use a 90 degree angle for countersunk heads.

12.1 ULTRASONIC WELDING

A similar effect to hot air staking can be produced by using ultrasonic energy as the heat source. This technique is also used for other assembly tasks with thermoplastics, including full or spot welding, inserting and swaging. It is usually referred to as ultrasonic welding. Ultrasonic welding is usually carried out at frequencies ranging from 15kHz to 40kHz. This is well within the range of cats (65kHz) and dogs (50kHz), not to mention dolphins (150kHz), but just beyond the threshold of audibility for humans (50Hz to about 15kHz).

When ultrasonic vibrations are applied to the interface between two parts to be joined, the vibrational hammering and friction generates heat which locally melts the plastics parts to form a fusion weld. The amplitude of the vibration is an important factor in producing the weld; to understand this we need to look briefly at the way an ultrasonic welder works.

The key component is a transducer or converter where electrical energy is transformed into mechanical vibrational energy with the same frequency. For this reason, the first step is to transform the standard low frequency electrical power supply to a high frequency running at 20kHz to 40kHz. The transformation into mechanical energy is usually performed by a piezoelectric transducer, typically a polycrystalline ceramic (referred to as a PZT converter). The piezoelectric material has the property of expanding and contracting when an alternating voltage is applied. In other words, it vibrates. However, the extent - the amplitude - of the vibration is small, something like 0.01 mm to 0.02 mm.

This is not enough to produce a good weld so the ultrasonic welder includes two devices to increase the amplitude. The first is known as a booster and is an integral component of the ultrasonic welder. The booster is a tuned resonator device that typically doubles the amplitude.

The second is the horn, also known as a sonotrode. This is not a part of the machine and must designed specifically to suit the individual welding task. The horn is in contact with the parts to be joined, and is contoured to fit the joint. Its function is to transfer both vibration and pressure to the joint while further increasing the amplitude of vibration at the tip, typically to a figure of 0.05 mm to 0.12 mm. Horn design is a complex affair and is best left in the hands of the machine supplier.

The suitability of a thermoplastic for ultrasonic welding depends on its ability to transmit high frequency vibration. This means that rigid materials are better than flexible ones. Melting behaviour is also important. Materials that melt over a broad temperature range and resolidify gradually work best. This is why amorphous plastics are better for ultrasonic welding than semi-crystalline plastics. The table shows the quality of weld to be expected when joining a particular thermoplastic to itself under optimum conditions. The table distinguishes between near and far-field welds. A near-field weld is one where the joint interface is within about 6 mm of a horn tip contact point; anything else is a far-field weld. Far-field welding is much less effective because of energy losses within the material.

	Material	Ease of welding	
		Near-field	Far-field
Amorphous	ABS	excellent	good
	ABS/PC alloy	excellent to good	good
	Butadiene-styrene	good	fair
	Cellulosics	fair to poor	poor
	PMMA	good	good to fair
	Polyamide-imide	good	fair
	Polycarbonate	good	good
	Polystyrene GP	excellent	excellent
	Polystyrene toughened	good	good to fair
	Polysulphone	good	fair
	PPO	good	good
	PVC rigid	fair to poor	poor
Semi-crystalline	Acetal	good	fair
	Fluoropolymers	poor	ineffective
	Polyamide	good	fair
	Polyester thermoplastic	good	fair
	Polyethylene	fair to poor	poor
	Polymethylpentene	fair	fair to poor
	Polypropylene	fair	poor
	PPS	good	fair

Ultrasonic weldability of some common thermoplastics

Source: After Lucas-Dawe Ultrasonics

DESIGNER'S NOTEBOOK

- Ultrasonics can be used to perform a variety of welding, staking, inserting and cutting operations on thermoplastics.
- Horn design is critical, and is a job for a specialist.
- Rigid thermoplastics weld better than flexible ones.
- Amorphous thermoplastics weld better than semi-crystalline.
- Try to avoid far-field welds in semi-crystalline materials.

12.2 ULTRASONIC WELDING

Correct joint design is important for successful ultrasonic welding, and several joint types have been developed to get the best results. As we have already seen, amorphous thermoplastics weld better than the semi-crystalline types. As we discuss joint configurations, we will look at the effect of this difference. There are three principal joint types – the shear joint, the butt joint, and the scarf joint. These can be modified by the use of small functional ribs in the form of beads and energy directors to produce a wide range of possible configurations. Let's start by looking at the basic shear joint.

The shear joint is useful for semi-crystalline materials. It works best with cylindrical parts and can produce a strong air-tight weld. Because of the relatively large melt area, the shear joint requires more power, greater amplitude of vibration, or longer weld times than other joints. It is also necessary to provide good support to the outside wall of the female component during welding, to prevent it flexing away from the male component. This is done by means of a snugly fitting locating fixture or jig. The principle of the shear joint is an interference fit; the recommended dimensions are given in the table. It is important that the two parts should be perfectly aligned before welding. This is achieved by providing a shallow location recess that is a slide fit for the male component.

Vibration energy from the ultrasonic horn causes the contacting interference regions of both components to melt. The result is a more or less conical weld zone. The displaced material usually emerges at both extremes of the joint as an unsightly bead of flash. This can be avoided by modifying the joint design to include flash wells. These are small recesses where the flash is contained and concealed.

Variations on the shear joint include angling the leading contact face either on the male or female component in order to reduce the initial contact area to little more than line contact. This promotes initial melting but is usually more effective with amorphous rather than semi-crystalline materials. Large parts require a slightly different treatment. It is usually impractical to provide complete support to the female component, so to prevent wall flexing, the wall of the male component is made an interference fit within an annular groove on the female component.

Maximum diameter mm	Interference per side A (mm)	Weld depth B (mm)	Locating recess C (mm)
< 18	0.2 to 0.3	1.25 to 1.5 times wall thickness	0.5 to 0.8
18 to 35	0.3 to 0.4		
> 35	0.4 to 0.5		

Recommended shear joint dimension

Sources: DuPont, Plastics Design Library, Allied Signal

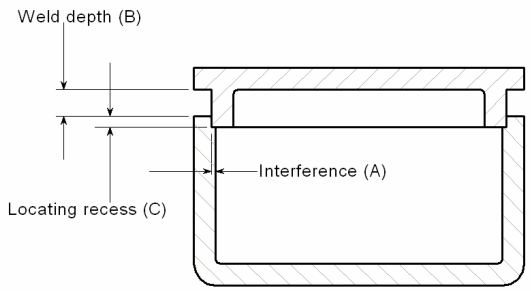

Basic shear joint before ultrasonic welding

Source: After DuPont

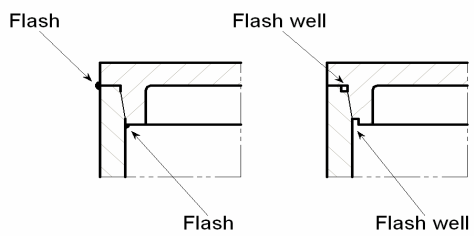

Use wells to hide shear joint welding flash

Source: After DuPont

DESIGNER'S NOTEBOOK

- The shear joint is good for semi-crystalline plastics.
- Align the parts perfectly with a locating recess.
- Design the jig to support the female part fully.
- Use a grooved joint for large unsupported parts.

12.3 ULTRASONIC WELDING

The butt joint is a basic joint in any welding but does require the use of energy directors. In a butt joint, the weld is formed between opposed surfaces of relatively large area. The joint is simple to design and tool but demands a high energy input to produce melting over these large areas. For that reason, a V-shaped bead or energy director is provided on one of the joint surfaces. In the case of an annular joint, the energy director is usually formed as an annular bead with a 90 degree included angle at the apex. Where the joint is irregular or more complicated, a series of discrete cones is a possible alternative.

The purpose of the energy director is to limit the initial contact between the joint faces to a much smaller area where the ultrasonic energy is concentrated. This leads to rapid initial heating and melting. In the case of amorphous plastics, the melted energy director flows across the full face of the butt joint to create the weld. There may be little or no ultrasonic melting of the joint faces apart from the energy director and its contact point on the opposing joint face.

The butt joint works less well with semi-crystalline materials due to their narrower flow temperature range in the molten state. This makes it unlikely that the molten energy director will flow across the full face of the butt joint. The result is likely to be a weak weld confined to the immediate vicinity of the energy director. The alternative is to apply high ultrasonic energy over a relatively long cycle time in order to create melting across the full joint face. The energy director angle is usually reduced to 60 degrees for semi-crystalline materials.

In order to achieve correct alignment of the welded parts, butt joints should be designed with a location feature that includes a small clearance for easy assembly. There is usually no structural need for this feature but if it is omitted the job of alignment must be done by a more elaborate and costly work-holding fixture.

Design rules for butt joints and energy directors are sometimes expressed in terms of the general wall thickness but it is more logical to link the rules to the butt joint width. The recommendations given in the table have been assembled and averaged from a variety of guidelines. However, the joint geometry will sometimes be dictated by the functional characteristics of the part. In this case, the general rule is to design the energy director so that its volume will result in a thickness of 0.05 mm to 0.10 mm when spread evenly over the full face of the butt joint.

Energy director height A (mm)	General wall thickness B (mm)	Clearance C (mm)	Energy director angle D (degrees)	Butt joint width E (mm)
0.3 to 0.4	< 1.5	0.05 to 0.15	60 to 90	2.0 minimum
0.4 to 0.5	1.5 to 2.5	0.05 to 0.15	60 to 90	2.5 to 4.0
0.1 times E	> 2.5	0.05 to 0.15	60 to 90	1.5 times B

Recommended butt joint dimensions

Sources: DuPont, Plastics Design Library, Allied Signal

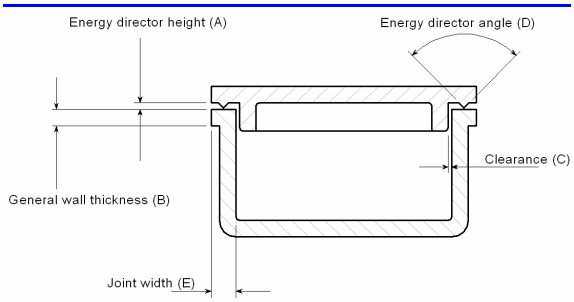

Basic butt joint with energy director

Source: After DuPont

DESIGNER'S NOTEBOOK

- The butt joint works best with amorphous plastics.
- Provide a locating feature to align the joint perfectly.
- Use an energy director to promote rapid melting.

12.4 ULTRASONIC WELDING

The shear joint and the butt joint are the principal joint types used for ultrasonic welding but the there is a third type - the scarf joint.

The scarf joint is useful for semi-crystalline materials because melting occurs over the full weld face and there is no need for the melt to flow through the joint. The two parts of a scarf joint have matching angled faces. The angle is in the range 30° to 60°, and the two faces should be parallel to within about 1°. The angled face increases the available melt area, and for that reason the high end of the angle range may be used for thinner walls. The table gives a rough guide to angle selection although the figure is not usually critical. The scarf joint is best confined to circular or elliptical components to avoid matching and contact problems at mitred corners.

Ultrasonic welding can also be used to secure metal or other parts to plastics components by the staking process. The moulded part has one or more studs or stakes that extend through holes in the component to be attached. The assembly is completed by using a specially shaped ultrasonic horn to melt the top of the stud and form it into rivet-like head. The standard design results in a rivet profile with a height equal to about half the stake diameter. Lower profile designs give faster staking cycles but result in a weaker rivet and are not normally recommended.

A plain dome rivet is often preferred for stake diameters of less than 3.5 mm, or for materials with abrasive fillers that would rapidly wear the horn tip. In this case, the stake is produced with a shallow conical form on its top surface. Stakes of 5 mm or more in diameter may be produced with a central bore to minimise sink marks on the moulding. In this case the horn is provided with a pilot that locates in the bore while an annular curved profile forms the hollow stake into an annular rivet. This idea can be extended to hold a plate in a plastics frame by ultrasonically forming or swaging the periphery of the frame section over the edge of the plate, either locally or around the entire perimeter. The ultrasonic horn forming tool is shaped in such a way that the plastics material is deformed only in one direction, towards the object to be retained and not towards the outer periphery of the plastics part.

Joint width W (mm)	Scarf angle (degrees)
2.0 or greater	30 to 40
1.0 to 2.0	40 to 50
1.0 or less	50 to 60

Guidelines for scarf joint angles

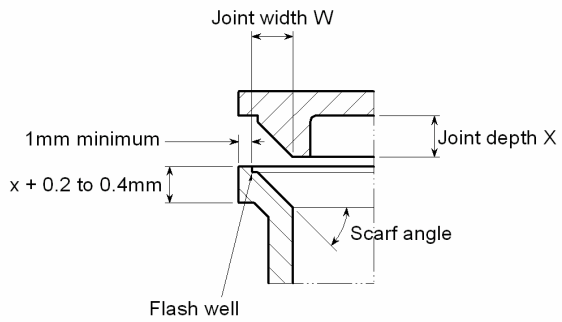

Basic scarf joint

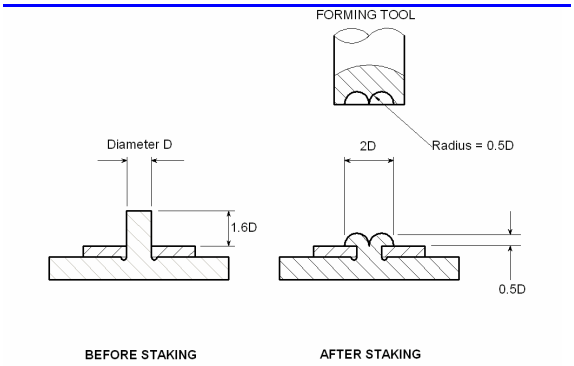

Typical dimensions for ultrasonic staking

Source: After DuPont

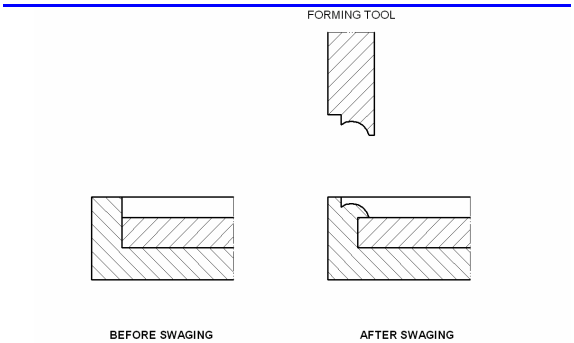

Ultrasonic swaging

DESIGNER'S NOTEBOOK

- The scarf joint works best with semi-crystalline plastics.
- The scarf angle should be 30° to 60°.
- Ultrasonic staking works best with a rivet head height not less than half the stake diameter.

12.5 ULTRASONIC WELDING

Spot welding is often used to join large sheet metal items together by means of small localised welds. Ultrasonics can achieve much the same thing with plastics. The plastics parts do not need preformed holes or energy directors. Instead, the ultrasonic horn is provided with a pilot tip which directs energy to a localised spot on the top sheet or component. The tip melts through the top sheet and enters the bottom sheet to depth equal to about half the top sheet thickness. Any displaced molten material is shaped into an annular ring by a recess on the pilot tip. At the same time energy is dissipated at the interface between the two sheets, causing further melting. Some of the top sheet molten material is carried into the bottom sheet where it bonds to form the spot weld. The underside of the spot weld remains smooth. Ultrasonic spot welding can be performed with hand-held or bench welders. Typical applications include fastening wall panels and ductwork.

Ultrasonic inserting is the process of embedding threaded inserts and other metal parts in a thermoplastics component by means of ultrasonic energy. It substantially reduces the stress on the plastics part compared to mechanical insertion. There are many different proprietary designs for ultrasonic threaded inserts and the manufacturers' recommendations for hole and boss sizes should be followed. However, we can give some general guidance. Most inserts have a locating feature which is a slide fit in the bore of the boss. The remainder of insert is an interference fit and generally includes an undercut section where the plastics melt can flow in to lock in the insert. The interference portion of the insert usually includes a variety of knurls, serrations, or fins designed to provide an adequate resistance to torque and pull-out forces.

The boss bore should be deeper than the insert to prevent bottoming out. As a rough guide, the bore diameter should be 0.3 mm to 0.5 mm smaller than the insert interference diameter. Ultrasonic insertion is usually performed by the horn contacting the insert and driving it into the plastics part but the reverse process can be used. In this case the horn contacts the plastics part and drives it onto the insert. For the insert contact method, titanium or hardened steel horns are preferred for wear resistance. A low vibration amplitude and a slow approach speed also help to reduce wear and tear on the horn.

Ultrasonic welding is most effective with rigid amorphous thermoplastics and works best when like materials are being joined. But in some cases it can be used to join dissimilar plastics. The general rule is that the difference in melt temperature between the materials should not be greater than 20℃, and the materials should be chemically compatible. Test welds should always be made to confirm the compatibility of particular grades.

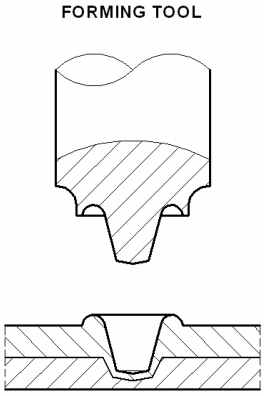

Typical spot weld

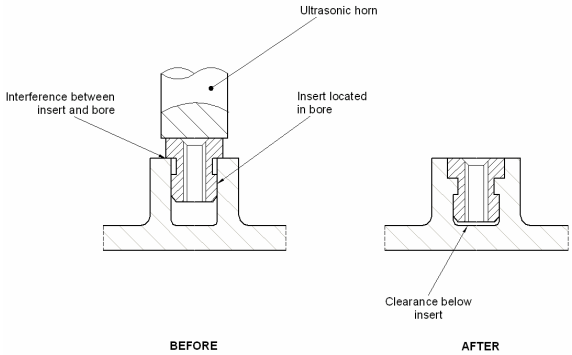

Ultrasonic inserting

- DESIGNER'S NOTEBOOK
- Spot welding is useful for fabricating and joining sheets.
- Ultrasonic inserting minimises stress on the boss but do follow the insert manufacturers' recommendations for boss and hole dimensions.
- Ultrasonic welding can be used to join some pairs of dissimilar plastics but check with test welds before going into production.

13 HOT PLATE WELDING

The hot plate welding process uses a heated flat plate to melt the joint surfaces. This means that the joint must be planar and cannot have locating features, so the parts must be held and aligned in jigs. The parts are bought into contact with the hot plate until the joint surfaces melt, then the hot plate is withdrawn and the melted surfaces are pressed together to create a weld that is held under pressure until it is sufficiently cooled to remain stable.

The hot plate itself is usually electrically heated and is provided with a non-stick coating to prevent the melted plastics from sticking to the plate with subsequent 'stringing' or degradation. The key process parameters are hot plate temperature, the duration, pressure and displacement during the heating and welding stages, and cooling time. The process is most often used for welding polyolefins, PVC and acetals. The table gives guideline times and temperatures for these materials but the precise conditions will depend on grade and particularly on part thickness, and should always be established by experiment. Materials with a tendency to oxidise rapidly when heated in air are not suitable for this process; polyamides in particular should not be hot plate welded.

Joint designs are usually quite simple. As a guide, the joint width should be at least 2.5 times the part wall thickness. During the welding process, flash is produced when beads of molten material are squeezed out on either side of the joint. To improve the appearance of the assembly, these can be concealed by providing recessed flash wells. The recess can take any form that is convenient for mouldmaking and will only be needed on the outer edge in the case of closed assemblies. Assembly tolerances can be improved by providing preset stops to control the extent of squeeze-down during heating and welding.

Hot plate welding is a simple and robust process, and can be used to join asymmetrical parts and parts that are too fragile for ultrasonic or vibration welding. However, there are limitations. The hot plate requires that both surfaces melt at the same temperature. In practice this usually means that the process is used to join like materials only. Perhaps the greatest disadvantage compared to ultrasonic or vibration welding is the long cycle time required for heating and cooling.

Some of these disadvantages can be overcome by process variants such as non-contact hot plates that heat by radiation, double heating plates for joining dissimilar materials, and contoured hot plates for non-planar components, but the basic mono-plate process is by far the most common.

Material	Hot plate temperature (℃)	Heating time (seconds)
High density polyethylene	190-220	30-80
Polypropylene	190-240	30-120
PVC unplasticised	230-250	40-60
PVC plasticised	130-200	20-60
Acetal	210-230	10-40

Guideline process conditions for hot plate welding

Source: New Horizons in Plastics, ed J Murphy, WEKA Publishing, 1991

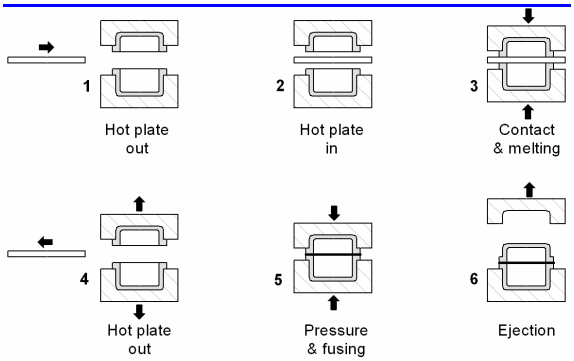

The welding sequence

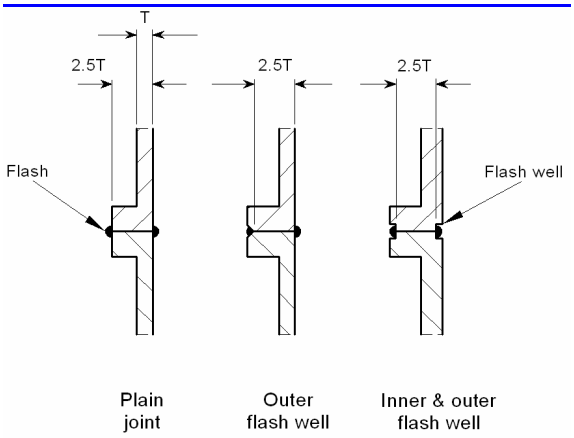

Typical joint designs

DESIGNER'S NOTEBOOK

- Hot plate welding works best with like materials and planar joints.
- You can get good results with polyolefins, PVC and acetals.
- Do not use hot plate welding for polyamides.

14 SPIN WELDING

In frictional welding processes, relative motion between the thermoplastics parts to be joined is used to create friction. This friction rapidly generates heat on the contact faces which melt and form a bond or weld on cooling. The basic mechanism of melting is not unlike that of ultrasonic welding in which ultrasonic vibrations generate the relative motion between the parts to be joined. Frictional welding may use a relative motion that is linear or orbital but this guide looks at the simplest form of friction welding which is known as spin welding, or sometimes rotation welding.

The process is suitable only for parts with circular planar joint faces having a common axis. The principle is simple. The parts are brought together under pressure and one is held stationary while the other is rotated about the common axis. When friction between the parts has melted the joint faces, the rotational drive is disengaged and the parts are maintained under pressure until the joint has cooled sufficiently to be robust. Spin welding machines use a variety of techniques to perform the process. For example, the rotational energy may be provided indirectly by a by motor-driven flywheel or directly by a motor operating via a clutch.

These basic systems produce an assembly in which the orientation of one welded part to the other is completely random. For most cylindrical objects this is immaterial but there may be features such as an outlet on one part and fixing lugs on the other that need to be aligned. This can now be achieved by servo drive spin welding systems that control the relative alignment of the welded parts down to plus or minus 0.1°. The alternative of course, is to use another welding method where rotary motion is absent, for example ultrasonic welding.

The preferred joint for spin welding features a V-shaped profile giving a weld face area some 2.5 times greater than that of the general wall thickness cross-section. Joint angles of less than 15° per side should be avoided otherwise the two parts may jam together. The diagram suggests typical joint proportions expressed in terms of the general wall thickness. As in other forms of welding, beads of flash are likely to exude from the joint. These can be concealed by designing recesses to act flash traps. Alternatively, an overlapping lip on one component can be used to conceal the joint completely.

Simple taper joints can be used instead of V-shaped joints but they are generally less satisfactory. The weld area is smaller and there may be a tendency to bell out the female part. This can be counteracted by a countersink feature but simple taper joints are best confined to thick walled and stiff parts.

The key parameters in spin welding are rotational speed and pressure. Actual figures will depend on material and joint design, and are best determined by experiment. As a rough guide, the tangential velocity at the joint should be 3 to 15 m/sec and the pressure should be 2 to 7 MPa. The design of the driven moulded part should include a feature that keys it to the drive jig. Typically, this is achieved by cams, recesses or protrusions moulded into the base of the part.

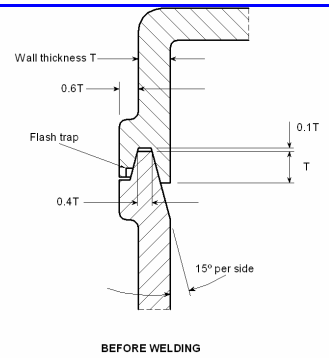

Preferred joint

Source: After DuPont

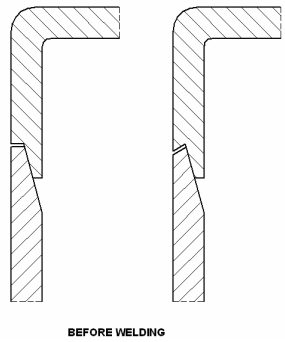

Alternative joints

DESIGNER'S NOTEBOOK

- Spin welding is only suitable for parts with circular and planar joint faces.
- Most spin welding equipment provides a random orientation of the welded parts.
- V-shaped joints are preferred.
- Do not use joint angles of less than 15°.

15 FRICTION WELDING

Spin welding is a special case of friction welding in which heat is generated by friction between a rotating part and a stationary part. This rotary motion can only be used when the joint is circular. However, most joints are rectangular or irregular in plan view and for these we need a different kind of relative motion. There are two possibilities; linear motion and orbital motion.

The simplest case is linear motion. One part of the joint is fixed and heat is generated by friction when the other part is rapidly reciprocated against it under pressure. The movement takes place on a single axis and so is linear. To allow this movement to take place, the joint surface must be flat in the axis of movement although it can be curved across the axis. It is also necessary for the joint side faces to be parallel to the axis otherwise they will not remain in engagement throughout the movement.

This movement is defined by the terms amplitude and displacement. The amplitude of a vibration is the maximum movement from an equilibrium position, so the total relative displacement of the parts of the joint is twice the amplitude of vibration. To prevent the parts snagging, the joint faces must never come completely out of contact. In other words, at the extremes of displacement there must still be a small overlap between the joint faces. For linear welding, this effectively limits the total displacement to about 1.8 times the joint width (W). So the amplitude of vibration is limited to about 90% of the joint width.

The key welding variables are displacement and pressure. These control melting, so timing is dependent on them. Melting can take place very rapidly; total cycle times including cooling are typically 2-3 seconds. There is no simple rule to determine the best combination of displacement and pressure so welding conditions are normally established by trial and error. Vibration welding machines typically work in low frequency (100-150 Hz) or high frequency (150-300 Hz) ranges. Low frequency welders use a higher displacement (1-4 mm) than high frequency machines (0.5-1.8 mm). Welding pressures typically range from 0.5-5 MPa.

Linear vibration welding is often used for long parts where ultrasonic welding would be difficult to accomplish and hot plate welding would be too slow. The parts must be held in jigs that support the side walls otherwise these will dissipate welding energy by flexing. Joint faces are flat and may include flash traps. The process is suitable for most materials but is particularly used for acetals, nylons and polyolefins.

Orbital welding puts less strain on side walls because the direction of movement is constantly changing. This makes it more suitable for thin-walled parts and it can also handle joint shapes that are irregular in plan view and impossible to weld by the linear method. In orbital vibration welding, friction is developed by moving one of the parts with a small circular motion. For this reason, it is essential that the entire joint face lies on a single plane. The size and axis of the motion must be determined in each case, to ensure that the joint faces remain engaged at all times. Displacements are typically 0.75 -2 mm.

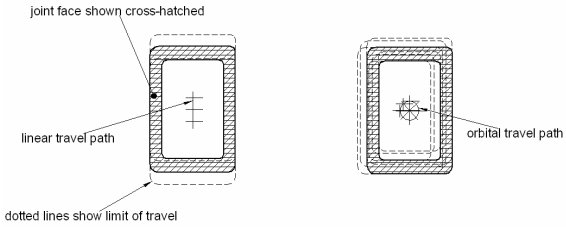

Linear and orbital welding compared

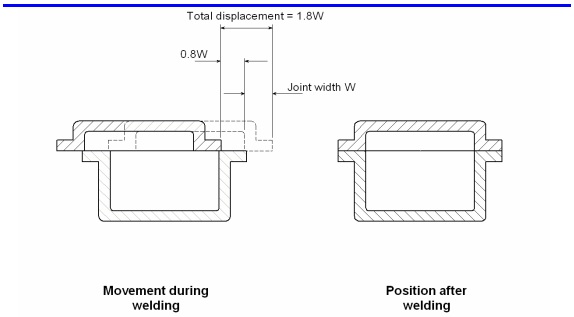

Vibration amplitude is limited by joint width

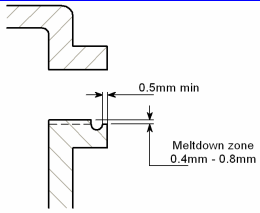

Typical vibration weld joint with flash trap

Source: After AlliedSignal Plastics

DESIGNER'S NOTEBOOK

- Linear welding joints must be flat in the axis of movement.
- Orbital welding joints must be completely flat (planar).
- The joint faces should remain partially engaged at all times.

16 INDUCTION WELDING

Induction welding differs from other plastics welding processes in that it requires a bonding agent or material that is inserted at the joint interface. Induction welding needs a magnetically active material and standard thermoplastics are not magnetically active. The bonding agent can be a metal foil, fabrication or stamping but is usually a specially compounded thermoplastic material containing ferromagnetic particles, usually iron or stainless steel. The thermoplastic base should be the same as, or highly compatible with, the parts to be joined.

When such a material is exposed to a magnetic field of rapidly alternating polarity, the ferromagnetic particles attempt at an atomic level to align with the polarity of the field. This atomic motion creates heat which is conducted to the thermoplastic matrix. The matrix reaches fusion temperature in as little as one or two seconds for small joints. Very large assemblies may take from 10 to 30 seconds for fusion.

Induction welding machines use an induction generator to convert a standard electrical supply to a frequency in the range 2-10 MHz, with a power of 1-5 kW. Induction heaters designed for metals operate at much lower frequencies and are not suitable for plastics. The high frequency alternating current is supplied to a water-cooled copper induction coil that surrounds the joint, and it is this coil that radiates the magnetic field. The field energy obeys the inverse square law, so coils should conform as closely as possible to the joint.

The compounded bonding agent comes in a variety of forms. Tape, strip and extruded profiles can be placed in simple joints, while complex joints can be handled with stamped or injection moulded preforms that conform exactly to the joint shape.

To start the process, the parts are assembled with an insert of bonding agent trapped in the joint. Jigs are used to locate the parts in the welding machine and must be made of non-conductive material to avoid interfering with the magnetic field. The parts are pressed together under moderate pressure - typically less than 0.5MPa - and are exposed to the magnetic field to melt the thermoplastic bonding agent. The pressure forces the molten agent material throughout the joint where it contacts and melts the joint surfaces, and bonds to them on cooling.

Joint configurations are designed to confine the bonding agent. Tongue and groove, shear and step joints are the usual forms, although plain and grooved flat joints can be used for large applications such as panels. Because the material in the bonding agent can be varied in the compounding process, induction welding can be used to join most plastics to themselves and can also be used for a wide range of dissimilar thermoplastics. The bonding agent is usually formulated specifically for each application, to produce an optimum combination of heating and melt bonding.

Induction welded joints cost more than other types of weld because of the need for an inserted preform but have a number of advantages. Irregular and large joints can be welded, dissimilar materials can be joined, thermal and mechanical stress is low, and part tolerances need not be extremely precise. Should it be necessary for repair or dismantling, induction welded joints can be broken by applying the magnetic field again; only the material containing ferromagnetic particles will melt.

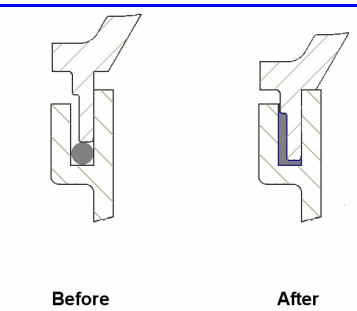

The principle of induction welding

Source: After Stanelco

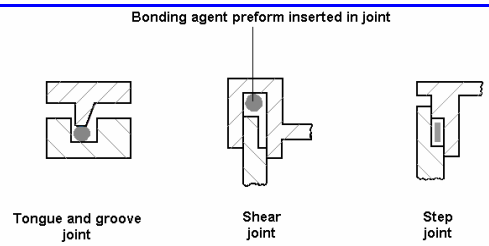

Preferred joint types. Source: After Stanelco

DESIGNER'S NOTEBOOK

- Induction welding requires a joint insert of magnetically active material.
- The process can be used with irregular or very large joints.
- Dissimilar materials can be joined.
- Jigs must be made of non-conductive material.
- Joints can be remelted for disassembly.

17 LASER WELDING

In laser welding, the energy of a laser beam is used to raise the temperature above the melting point at the interface of two parts to be joined. For this to be effective, the plastics material between the joint interface and the laser source must be transparent to the laser energy whilst the material below the joint interface must absorb the energy. The ideal is that almost all the energy should be absorbed at or near the surface of the energy-absorbent material.

Transparency to laser radiation is not necessarily the same as transparency to light. It is quite possible for a material that appears opaque to the eye to be transparent to the laser. This is because of the difference in wavelength. Humanly visible light has a wavelength of 400nm to 700nm whereas plastics welding lasers operate in the range 800nm to 1100nm.

Plastics can be welded with a laser diode or a Nd:YAG (neodymium/yttrium aluminium garnet) laser with a power of 10 to 30 Watts or more. This is sufficient for rapid welding at speeds up to 10 m/min. There are two ways of applying laser radiation to the joint. In the first method the laser beam is adapted to irradiate the entire joint profile simultaneously. The alternative and more adaptable method is to guide a focused laser beam along the joint profile under computer control.

Lasers can be used to weld almost all thermoplastics, including dissimilar plastics provided their respective melt temperature ranges overlap. The essential point is that one of the joint materials must be transparent to laser radiation while the other absorbs the radiation. This difference is brought about by colouring the materials with pigments that are either laser transparent or absorbent. By using different types of pigment it is possible to laser weld materials that are the same colour. Alternatively, a laser-opaque coating may be applied at the joint surface.

Laser welding is not much affected by other additives in the material; 50% glass reinforced plastics have been successfully welded. Joint strength is 80 to 100 percent that of the base material. The key parameters affecting joint quality are laser power, beam focus spot size, welding pressure, and speed/time.

Laser joints can be very simple. The joint width is defined by the laser beam so there is no need for special joint geometries or flash traps, and this reduces mould costs.

Laser welding has a number of advantages that can be used to offset the relatively high cost of the equipment. It is a non-contact process so it can be used with fragile components such as electronics modules. Heat is generated directly at the joint so temperature increases can be confined and minimised. No flash or debris is generated. Computer-guided lasers can deal with complex three-dimensional joints. Laser welding is therefore particularly suitable for very large and very small parts, for medical and other 'clean' applications, and for assemblies incorporating delicate components.

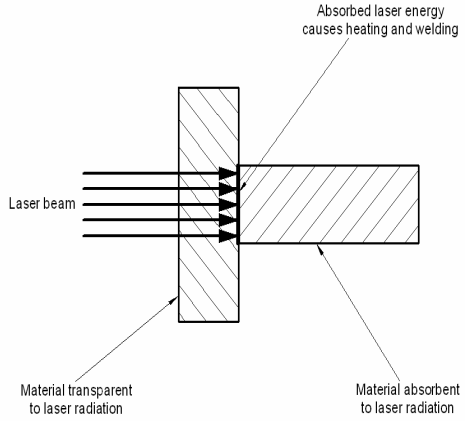

The principle of laser welding

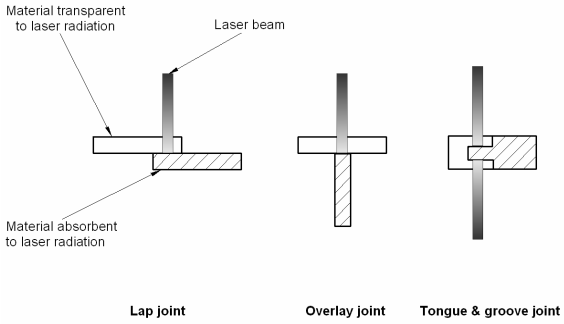

Transmission joint types for laser welding

Source: After Leister

DESIGNER'S NOTEBOOK

- One joint material must be transparent to laser radiation while the other absorbs the radiation.
- Almost all thermoplastics can be laser welded, including reinforced and dissimilar materials.
- Joints can be very simple and need no flash traps.
- Laser welding is good for very large and very small parts, for clean applications, and for assemblies with delicate components.

18.1 ADHESIVE AND SOLVENT BONDING

Modern moulding is all about value added. Buyers now want assemblies and products, not just parts. That makes joining techniques important and over the next few Design Guides we continue this theme with a look at adhesive and solvent bonding, sometimes called cementing. Correctly chosen adhesives can be used to bond like or unlike plastics together and can also be used to bond plastics to foreign materials such as metals, wood and ceramics. Suitable solvents can also be used to bond like thermoplastics together but the method is not normally used for unlike plastics or foreign materials.

Solvent bonding works by softening the surfaces to be joined. When the surfaces are pressed together, opposing polymer chains are attracted by Van der Waals forces and become entangled to a degree. As the solvent evaporates, the interlocked surfaces harden to create a permanent bond. This is sometimes called diffusion bonding. Bond strength depends on the extent of molecular entanglement. There are significant drawbacks to the use of solvents for bonding. Solvents are often flammable and vapours may be toxic and explosive. These factors pose a health and safety risk, so many countries now impose strict regulations to control vapour emissions and workplace practices. Another snag is that some plastics, for example the polyolefins, are highly resistant to solvents. For these reasons, adhesive bonding is now usually preferred for most applications.

Adhesive bonding works in a more complex manner than solvent bonding, and usually involves a combination of forces. Solvent-like diffusion forces may arise from molecular entanglements at the interface between adhesive and base material. Oppositely charged molecules may also create ionic bonds and electrostatic forces. Probably the major component of adhesion is the adsorptive force arising from chemical, dipolar or Van der Waals interactions at the interface.

Why might we use an adhesive instead of mechanical fixings or welded joints? There are arguments for and against. Probably the major disadvantage is cycle time. The strength of an adhesive bond generally takes time to develop and the joint may have to be clamped or otherwise maintained in alignment during this period. In solvent bonded joints, the complete evaporation of solvent from the body of the joint may take a very long time. The major gains are that dissimilar and fragile materials can be joined in a relatively simple manner.

Depending on product design and service conditions, joints may be subjected to a range of stresses, often in combination. Adhesive-bonded joints resist tensile, compressive and shear stresses well but are prone to fail under peel and cleavage conditions. These types of joints should be avoided. In future Design Guides we will look at joint design, and discuss adhesive types and surface pre-treatments.

The pros and cons of adhesive bonded joints	
Advantages	Disadvantages
Bond is continuous	Cycle time
Low stress concentrations	Joint can't be dismantled easily
Low application force is suitable for fragile or flexible materials	Process uniformity may be difficult to achieve
Unlike materials can be joined	Joints are weak under peel or cleavage loads
Can be applied to complex forms	Possibility of environmental stress cracking
Joint is sealed	Possibility of spills and runs
Basic equipment is simple	
Joints are strong in tension, compression and shear	

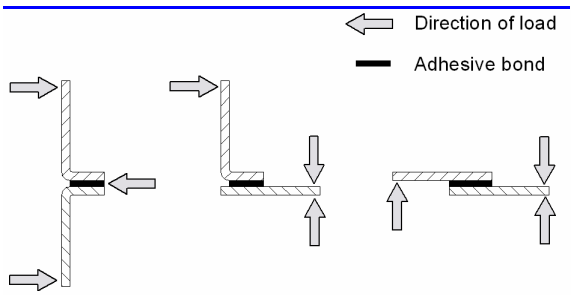

WRONG - AVOID PEELING

Adhesive bonded joints are weak under peel conditions

DESIGNER'S NOTEBOOK

- Adhesives give more predictable results than solvents and pose fewer health and safety problems.
- Adhesives can be used to bond unlike materials and fragile components.
- Remember that bonded joints often result in longer cycle times than other joining methods.
- Bonded joints are strong in tension, compression and shear.
- Bonded joints are weak under peel and cleavage conditions.

18.2 ADHESIVE AND SOLVENT BONDING

Adhesive and solvent bonded joints are strong in tension, compression and shear, but weak under peeling and cleavage forces. This affects the way joints must be designed; the principle is to eliminate or at least minimise loads that tend to peel or cleave the joint apart.

Most designs are variations of the lap (overlapping) joint or the butt (end-to-end) joint. The offset lap joint resists tensile loads better than the simple lap joint because it minimises any tendency for the joint to peel. The scarf joint is better than the simple butt joint because the surface area of the joint is greater.

Both lap and butt joints can be improved by variations to the basic design. Lap joints can bevelled or stepped to minimise peel effects, although the stepped joint is difficult to implement on thin walls. Butt joints can be improved by using extra components to strengthen the joint, for example by increasing the joint area or changing the dominant type from butt to lap. This is done by adding an adhesive-bonded cover strap on one or both sides of the butt joint. Perhaps the best type is the bevelled double strap design but the additional components and adhesive applications make all these combination joints more costly than the basic types.

The joint configuration is not the only thing that affects joint strength. Adhesive thickness and joint dimensions play a part too. When all these considerations are correctly applied, the joint is usually stronger than the plastics parts themselves. In other words, the plastics component will fail before the joint does.

Where adhesives are concerned, more is not always better. If the adhesive layer is too thick, the shear strength of the joint will be reduced – in some cases to less than half than that of a thin adhesive layer. The exact response depends on the type of adhesive but the general principle should be to use little more adhesive than is necessary to produce a complete unbroken film between the joint surfaces. Typically this will result in an adhesive layer from 0.1mm to 0.3mm thick.

The effect of joint dimensions is rather more subtle. Different lap joints with the same joint area will have different strengths, depending on whether the joint width or the overlap is the larger. As a general rule, increase width rather than overlap to make a joint stronger.

The size of the overlap is important but only insofar as it is necessary to exceed a minimum figure. Extending the overlap beyond this minimum will not make the joint much stronger. The minimum or optimum overlap is proportional to the plastics wall thickness and tensile modulus and is inversely proportional to the adhesive shear modulus. In principle, it would be possible to calculate the optimum overlap for every joint. In practice, it is usually good enough to make it three to five times the plastics thickness.

There are two more factors that affect joint strength. Both surface preparation and the type of adhesive have an important bearing on the quality of the bond.

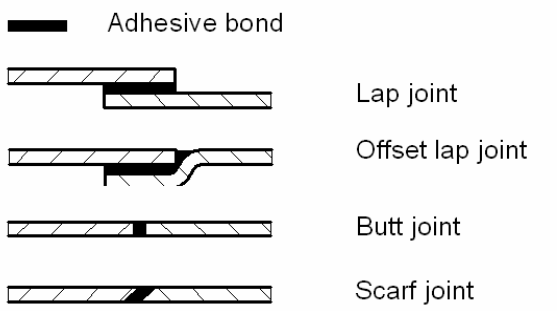

Basic joint types

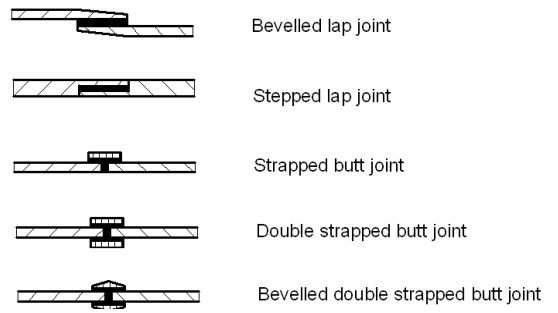

Improved lap and butt joints

DESIGNER'S NOTEBOOK

- Design joints to minimise peeling or cleaving actions.
- Don't apply adhesive too thickly.
- To improve joint strength, increase the joint width rather than the overlap.
- Overlap should be three to five times the wall thickness.

18.3 ADHESIVE AND SOLVENT BONDING

Table 1 shows the principal types of adhesives that are commonly used with plastics. Of course, there are many variations on each type and many more proprietary formulations developed by specific suppliers. Nevertheless, the basic types allow us to classify adhesives by key characteristics, and this helps with selection.

The problem is that the great variety of adhesives on offer makes it very difficult to give firm guidance about the best choice for each plastics material. Indeed, advice becomes almost impossible when you consider the endless combinations of dissimilar plastics and foreign materials such as metals and wood that are found in plastics assemblies.

Adhesive selection then, remains to some extent a matter of trial and error. Key considerations in the decision include joint strength, speed of setting, whether pressure, heat or UV radiation is required, whether the adhesive can fill gaps in the joint, whether pre-mixing is necessary, and how the adhesive is to be applied. These points all have an important bearing on the quality and cost of the joint.

Solvent bonded joints are an alternative to adhesives, but are usually confined to joints between similar plastics. Table 2 lists the most common solvents for particular plastics. The solvent may be used in its basic liquid form, or with polymer in solution as a cement, or sometimes thickened with an additive to form a gap-filling cement. Solvents suffer from serious disadvantages, including explosive and fire hazards, environmental dangers, and human health risks. Therefore, adhesives are preferred whenever possible. Before any solvent is used industrially, it is essential to ensure that it, the method of use and the workplace all conform to local health, safety and environmental regulations. Many adhesives will also require care. In each case, the rule should be to obtain the materials safety data sheet (MSDS) and the manufacturer's recommendations for use. Materials safety data sheets are often available on the internet.

Type	Base material	Setting mechanism	Comments
Cyano-acrylates	Acrylics	Chemical reaction with surface moisture	Rapid curing. Usually not gap-filling.
Elastomers	Polyurethanes, silicones, polysulphides, nitrile rubbers	Physical, pressure sensitive	High peel strength. Not gap-filling.
Epoxies	Epoxies	Chemical, by reaction with hardener	One or two-part systems. Gap-filling.
Hot melts	Polyamides, polyesters, polyethylenes, polysulphones, EVA copolymers	Physical	Gap-filling
Poly-urethanes	Polyurethanes	Chemical, by reaction with moisture or hardener	One or two-part systems. Gap-filling.
Toughened acrylics	Acrylics, methacrylics	Chemical, by reaction with catalyst	Two-part system, pre-mixed or applied separately. Rapid curing. Gap-filling.
UV curable	Acrylics or epoxies	Chemical, by exposure to UV radiation	Rapid curing

Table 1: Principal types of adhesive used for bonding plastics

Polymer	Solvent
ABS	methyl ethyl ketone, tetrahydrofuran, methylene chloride
Acrylics	methylene chloride, trichloroethylene, ethylene dichloride
Cellulosics	methyl ethyl ketone, acetone
Nylons	phenol, resorcinol, meta cresol, formic acid
Polycarbonate	methylene chloride, ethylene dichloride
Polyethersulphone	methylene chloride
Polystyrene	methylene chloride, ethylene dichloride, trichloroethylene
Polysulphone	methylene chloride, toluene, xylene
PPO	trichloroethylene, ethylene dichloride, methylene chloride
PVC	tetrahydrofuran, methylene chloride

Table 2: Principle solvents for plastics.

DESIGNER'S NOTEBOOK

- Use solvent bonding only if adhesive bonding is impractical.
- Test to verify if the chosen method is effective & economical.
- Pay strict attention to health, safety and environmental regulations.

18.4 ADHESIVE AND SOLVENT BONDING

Bonding is a surface process, so the properties of the joint surface have an important bearing on the joint strength. We want the adhesive to spread out over the joint and to penetrate into tiny irregularities on the joint surface, and for this to happen the adhesive must 'wet' the plastics surface. The key factor in wetting is surface tension. If the surface tension of the adhesive is higher than that of the surface, the adhesive will not wet the joint. Instead it will tend to form a bead, like water on wax. Unfortunately, many plastics have low surface tensions, making wetting difficult. Surface tension is expressed in dynes/cm; the value is known as the dyne level. It is a measure of the material's surface energy.

Guide values for untreated plastics are given in Table 1. The lower the value, the more difficult it will be achieve a good bond. Remember that additives and surface contaminants may result in lower dyne levels than those given in the table. Mould releases, lubricants, and slip additives are just three examples of agents that will reduce surface energy. To minimise the effect of additives, it is best to bond the part immediately after moulding and before the additive can migrate to the surface. The actual surface energy of moulded parts can be measured in a simple way by using dyne pens. The pens come in sets, each containing a liquid of calibrated surface tension. Surface energy is measured by observing which pen wets the surface.

The surface energy of some plastics is too low for efficient bonding. In these cases, we have to increase the energy level by a surface treatment. It is not possible to define a precise threshold energy value above which surface treatments become unnecessary but as a rough guide, anything near or above 40 dyne/cm may be good enough. This means that PP, PE, PBT and plasticised PVC will definitely need treatment before adhesive bonding. Table 2 lists the principal surface treatments for plastics. Don't forget that any surface, whatever its energy level, will require a surface cleaning treatment if it is soiled or dusty, or if it is coated with mould release, lubricant, fingerprints or other contaminants.

Polymer	Surface energy (dynes/cm)
PP	29-31
PE	30-31
PBT	32
PVC plasticised	33-38
POM	38
PMMA	38
Polystyrene	38
PPS	38
ABS	35-42
PVC-U	39
Polyamides	38-46
PET	41-44
Polycarbonate	46
PPO	47

Typical surface energies of untreated plastics

Sources: 3M and Sabreen Group

Treatment	Description	Mostly used for
Flame treatment	The surface is oxidised by exposure to an oxygenated flame.	PP, PE, POM
Corona discharge	The corona discharge creates an ozone-generating spark that both roughens the surface and raises the energy level.	PP,PE
Plasma treatment	The surface is bombarded at low pressure with gas ions, e.g. oxygen, nitrogen, argon or helium.	Most plastics
Simple abrasion	The surface is mechanically roughened then any dust and debris is removed.	Most plastics
Adhesive abrasion	The surface is abraded in the presence of the adhesive, immediately before bonding.	Fluoropolymers
Acid etching	Etching with chromic acid roughens the surface and increases energy levels.	PP,PE, PS, ABS, POM, PPO
Primers	There are many proprietary types of primer available, generally optimised for specific combinations of adhesive and polymer.	PP,PE, POM, PBT, PET, fluoropolymers
Surface cleaning	Treatment with solvents, detergents and other cleaning agents to remove surface dust and grease.	All plastics

Principal surface treatments for plastics

Sources: Loctite and Handbook of Plastics Joining William Andrew, 1997, 1-884207-17-0

DESIGNER'S NOTEBOOK

- Plastics with a surface energy less than about 40 dyne/cm will need a surface treatment before bonding.
- All plastics may need cleaning and degreasing before bonding.

18.5 ADHESIVE AND SOLVENT BONDING

A major potential hazard for bonded parts is environmental stress cracking or ESC.

As an example. The first injection moulded polycarbonate crash helmets fractured much more easily than expected. An investigation showed that fashion-conscious motor cyclists had decorated their helmets with paints and stickers. The problem was due to environmental stress cracking caused by the paints and adhesives. So what is environmental stress cracking, otherwise known as ESC? The phenomenon is the most common cause of service failure in plastics parts. It comes about when a component is exposed to stress in the presence of any of a range of fluid agents known as stress cracking agents. The agent causes no chemical interaction but has the physical effect of sharply accelerating any tendency to crack. Thus, a level of stress that would not normally be sufficient in the short or medium term to cause a problem, becomes significant when a stress cracking agent is present. In other words, designs that appear to be mechanically sound may fail when exposed to a stress cracking agent.

ESC failure can occur at very low levels of stress. There need not be any external force on the plastics part; residual moulded-in stress is often quite sufficient to bring about failure. Neither need the part be immersed in a stress cracking agent to be at risk. As we have seen, apparently harmless treatments with paints, inks, lacquers, plasticisers, lubricants, surfactants and rust-proofing fluids can cause environmental stress cracking. And so can adhesives.

Plastics vary in their resistance to ESC, and a material that is an ESC agent with one type of polymer may be harmless with another. Failure by ESC is essentially a surface effect that is initiated at a microscopic scale. This explains why plasticisers that are harmless when compounded into a material may nevertheless act as ESC agents when applied to the surface of the unplasticised material. These considerations make it impossible to give general rules about which combinations of polymer and agent to avoid. What we can say is that the solvents and other constituents in adhesives may cause environmental stress cracking of the bonded plastics parts, and we must be aware of this before we finalise a design.

Although there are no hard rules, we can make some generalisations. Amorphous plastics are much more likely to fail by ESC than semi-crystalline plastics. High melt flow materials are likely to be the worst. High service temperatures will encourage environmental stress cracking. The fluids most likely to act as ESC agents are those with a moderate degree of hydrogen bonding. Examples are aromatic and halogenated hydrocarbons, ethers, ketones, aldehydes, esters, and compounds containing sulphur or nitrogen.

So far, there is no reliable way to predict which combinations of plastics and agents will be prone to ESC. The only way to be sure is by testing, with perhaps one exception: there have been no reported cases of ESC for polypropylene. In all other instances, particularly those involving the higher risk plastics and agents mentioned above, proceed with caution. Ask the adhesive supplier to certify that the product is not an ESC agent when used with your plastics part, and test if there is any doubt.

DESIGNER'S NOTEBOOK

- Adhesives and solvents can cause environmental stress cracking (ESC) in plastics.
- The risk is greatest with amorphous plastics and high melt flow materials.
- Testing is the only way to be sure that an adhesive will not cause ESC.
- Ask your supplier to certify that the adhesive will not cause ESC with your plastics product.

19.1 OUTSERT MOULDING

Outsert moulding is a very powerful and perhaps underused technique for reducing component counts, cutting assembly costs, and for creating a rigid and dimensionally stable multi-functional component.

Most people are familiar with insert moulding. In that process, small metal components such as threaded bushes are embedded within a larger plastics moulding, either by moulding around the metal or by inserting it later into a moulded hole. The metal is inserted within the plastics material, hence the term insert moulding. Outsert sounds like the opposite of insert, and it is. In outsert moulding, the plastics material forms a relatively small part of a larger metal component. The plastics parts are embedded within the metal, hence outsert moulding.

The metal part usually takes the form of a sheet of steel or aluminium, pre-punched with holes to receive the outsert mouldings and with any other features necessary for its function in the finished assembly. The sheet is usually flat but it may also be formed to shape to create flanges, fixing brackets and so on. Alternatively, the sheet may be formed after outsert moulding has been completed. Other sheet materials, for example high strength laminates, can also be used for outsert moulding instead of metal.

This basic architecture means that outsert mouldings generally take the form of a structural chassis in which the plastics parts provide features such as bearings, springs and snap fits that would be costly or impossible to produce in metal. The sheet provides rigidity, strength and dimensional stability. The technique replaces many components by a single outsert moulding that is much cheaper than a conventional assembly. This is done by using multiple gate points so that quite separate injection mouldings can be made at many different locations on the sheet.

Most outsert mouldings are made up from a number of basic components – bosses, walls, springs, rotating parts and bonding parts. Variations on these themes produce a wide range of design possibilities. The fundamental form is the boss, so we will start by examining that.

The boss is moulded over a hole in the plate and effectively forms a flange on either side of the plate, thereby fixing it securely in position. Shrinkage plays a part here, and this is a factor that we always have to bear in mind when designing outsert mouldings. The plastics parts are subject to normal moulding shrinkage; the metal part is not. In the case of the boss, this is both good and bad news. Axial shrinkage causes the plastics part to grip tightly onto the sheet thickness, but radial shrinkage makes it shrink away from the hole perimeter. This creates a small clearance and it means that the centreline of the boss can move off the centreline of the hole. In other words, dimensional accuracy is at risk. The other problem with this very basic boss design is that it is not well supported to resist cantilever forces applied at the end.

Basic component	Uses
Bosses	Bushes, bearings, pillars, sleeves
Walls	Guides, slideways, housings
Springs	In plane of plate, perpendicular to plate, snap fits
Rotating parts	Shafts, gears
Bonding parts	Anchorage of inserts

The basic components used in outsert moulding

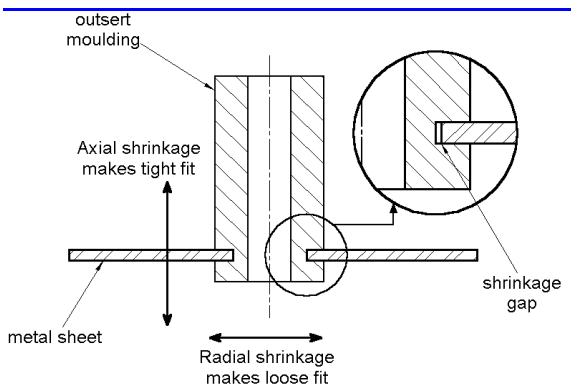

How shrinkage affects an outsert moulding

DESIGNER'S NOTEBOOK

- Outsert mouldings reduce component counts and cut assembly costs.
- They are rigid, dimensionally stable and multi-functional.
- Problems can arise because the plastics parts shrink and the metal does not.

19.2 OUTSERT MOULDING

The basic boss is a key component of outsert moulding and is used to create bushes, bearings, pillars, sleeves and fixing points for thread-forming screws. This most simple form of boss has two disadvantages. It does not have much resistance to cantilever forces applied at the end, and its positioning can be inaccurate because radial shrinkage makes the boss a slightly loose fit in the hole in the metal plate.

One way to stabilise a boss against cantilever loads is to increase the diameter of the part (the flange) that is in contact with the metal plate. For a basic boss, the diameter of the hole in the plate (D1) is typically 0.65 to 0.8 times the outer diameter (D2). This means that the area overmoulding the plate is quite small. If we increase this area by increasing the outside diameter of the boss, the wall thickness then becomes excessive.

The answer is to step out the boss wall to form a flange whose diameter (D3) is 2 or more times the diameter of the plate hole (D1). If the flange diameter is made too large, there is a risk that shrinkage will cause the outer edges of the flange to warp away from the metal plate, so reducing stability again. The flange design does nothing to counter the radial shrinkage problem, and it is also possible to rotate the moulding within the plate, provided the hole is round.

Both of these difficulties are overcome by the buttress boss and this is generally the preferred solution for outsert moulding. The buttress boss is provided with three or four equally spaced ribs, each of which is also anchored to the metal plate by moulding through separate holes. The pitch circle diameter (D4) of these anchor holes is typically 2 times the boss diameter (D2). The diameter (D6) of the anchor holes is some 1.5 to 2 times the thickness (T) of the metal sheet, and the width of the buttress ribs is not less than the anchor hole diameter. These figures are reasonable for sheet metal of 1 mm to 1.5 mm thickness. For thicker sheet, the rib thickness becomes the limiting factor that determines the diameter of the anchor holes. You will probably not want to make the ribs thicker than 2.5 mm at the most, unless the boss has to stand up to severe forces.

The ribs can extend the full length of the boss but are commonly designed to cover 0.5 to 0.8 of its length. The ribs and boss should of course be provided with a normal moulding draft. The junctions between ribs and boss should also be provided with a small radius to prevent notch effects caused by stress concentrations.

Three or four ribs is the ideal for a buttress boss but if space is limited and dimensional accuracy is more important than resistance to cantilever forces, there can be just two equally spaced ribs. Shrinkage across the two anchors will still centre the boss in the main hole. Cantilever force resistance will be good in the plane of the ribs but will be poor on a plane normal to the ribs.

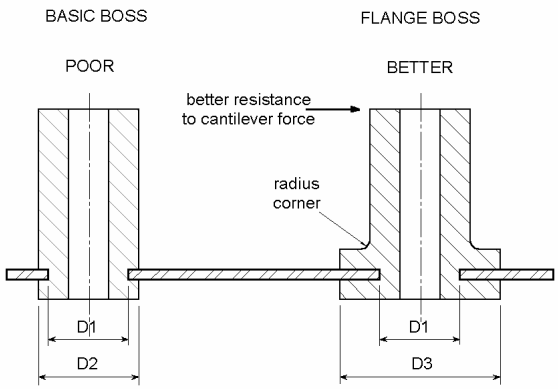

The flange boss improves on the basic design

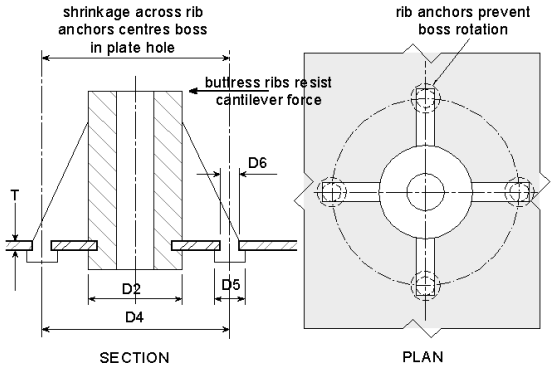

The buttress boss is the preferred design

DESIGNER'S NOTEBOOK

- The buttress boss is the preferred design because it is dimensionally accurate, prevents rotation and is strong and stable under cantilever forces.
- Three or four ribs are best.
- Remember to provide draft and radii on the ribs.

19.3 OUTSERT MOULDING

Problems arise in outsert moulding because the moulding shrinks significantly while the metal plate does not. The bigger the moulding, the worse these problems become. The largest feature normally to be found on an outsert moulding is a wall of some kind. It will usually be thin but long and will function as a housing, guide or restraint for other components that are subsequently assembled to the outsert moulding. For such a feature, shrinkage is a severe problem.

It would be reasonable to attach a long wall to the metal base plate by means of at least two anchors moulded through holes in the plate. It would also be advisable to locate these anchors fairly close to the ends of the wall, to prevent the ends from flexing. However, this design will be unsuccessful because the long moulded part will want to shrink by a comparatively large amount but is prevented from doing so by the metal plate restraining the anchors. This causes a stress in the moulding which is likely to be relieved either by causing the thin metal plate to bow or by shearing off one of the anchors. In any case, the stress in the moulding is undesirable in itself because it could cause a mechanical weakness or be prone to environmental stress cracking in service.

The usual solution to this problem is to break the long wall into a series of short walls separated by small gaps. The mechanics of shrinkage remain exactly the same but the crucial difference is that the magnitude of shrinkage in a short section of wall is only a fraction of what it is for the long unbroken wall. Consequently the stress set up by the metal plate resisting shrinkage is no longer sufficient to bend the plate or shear an anchor. All long walls should be broken into sections for outsert moulding, and the sections should be relatively shorter for materials with higher shrinkage rates.

Like the boss, the wall feature is comparatively weak at resisting cantilever forces normal to the plane of the anchors. It can be strengthened in just the same way as a boss, by providing anchored buttresses. Usually, one long face of the wall is a working surface that guides or locates another component so buttresses are typically confined to the non-working side of the wall.

The anchors are fixed points because they are restrained by the metal plate, so shrinkage of portions of the moulded part takes place towards the nearest anchor point. This affects the dimensional positioning of moulded features relative to the plate. Important features, for example bearing holes, should have an anchor positioned in line with them to fix their positions relative to the plate.

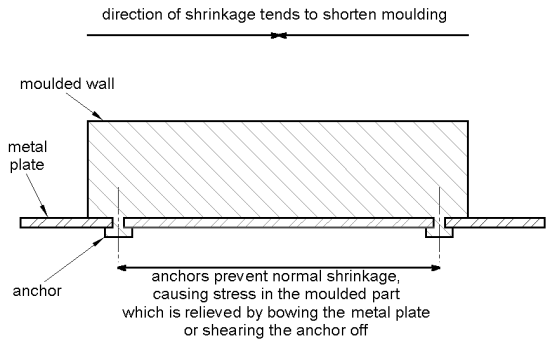

Shrinkage is a problem for large features

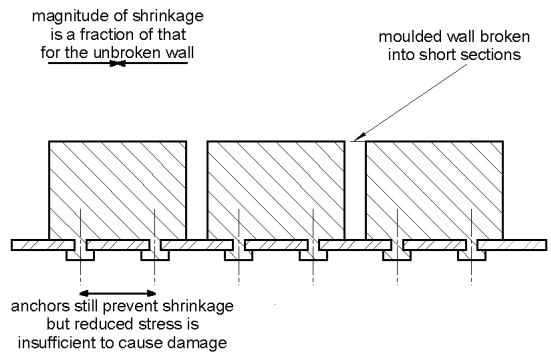

Break large features into a series of small mouldings

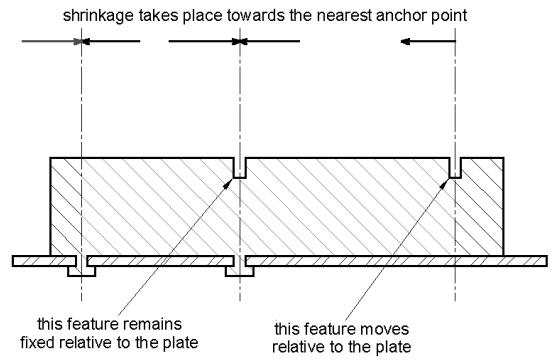

Align important features with an anchor

DESIGNER'S NOTEBOOK

- Always consider what will happen when normal shrinkage is prevented by the metal plate.
- Break long features such as moulded walls into short sections.
- Important features can be fixed relative to the plate by providing an in-line anchor.

19.4 OUTSERT MOULDING

One of the most useful attributes of outsert moulding is the ability to create spring features that can be used to secure other components. Typical examples include fixing of wiring, electronic components, batteries, and mechanical items. The uses are limited only by the designer's imagination and the characteristics of plastics springs. That in turn depends on the material of construction and the service conditions.

In principle, any thermoplastic material can be outsert moulded onto a metal plate. In practice, by far the most popular material for the process is acetal, although PBT and polyamides are also used. Acetal is the leader because it combines surface hardness and a low coefficient of friction with resistance to stress cracking when in contact with lubricants. These characteristics are ideal for the bearing, guiding and sliding features that are common in outsert applications. Other pluses are creep resistance, dimensional stability, ease of moulding and a relatively high shrinkage that helps to lock moulded components to the plate.

To avoid any problems with creep, springs should be designed so they are only lightly stressed in the working position. In other words, the spring can flex substantially to allow another component to pass into position but should then return close to the rest position to retain the component mechanically. Design for a strain in the working position of no more than 2.5%; for a typical acetal this equates to maximum allowable flexural stress of 40-45 N/mm^2. For the momentary deflection that occurs during assembly, the strain figure may go up to 8%. For a typical acetal that is about 60 N/mm^2. These guide figures are for unfilled grades at room temperature. For accurate design you should always use grade-specific data.

Outsert springs can be designed to act either in the plane of the metal plate or at right angles to it. The 'in-plane' spring is moulded directly against the surface of the plate. Because it does not adhere to it, the spring is free to flex parallel to the plate by sliding against it. To resist the rotary reaction, the spring needs two anchors. At the penalty of a more complicated mould, it is possible to provide a clearance between the spring and the base plate, so there is no sliding contact. This is done by forming the underside of the spring portion against a mould core member that passes through a hole in the plate.

The right-angled or 'perpendicular' spring typically takes the form of a frame moulded into the plate. This frame contains an integrally moulded cantilever element that acts as the spring. Design variations can provide a spring that is above, below or in line with the plate. Indeed, the spring can be placed on an angle to the plate should the application require it. Because the frame shrinks while the plate does not, the frame design does not provide an absolutely accurate location. If precision is crucial, the design should be modified to include four moulded-through anchors.

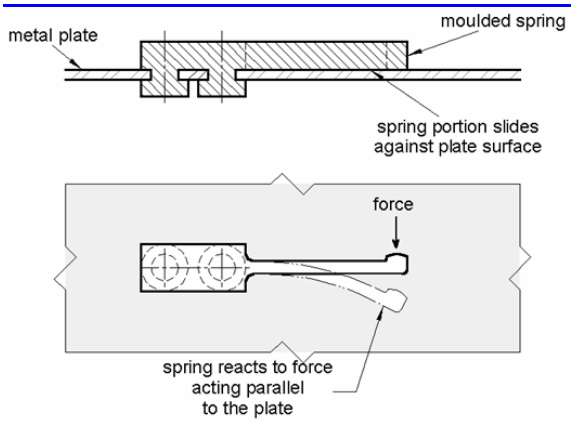

The ‘in-plane’ spring operates in the plane of the baseplate

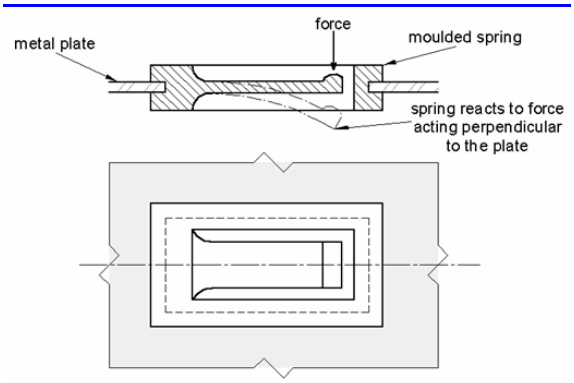

The ‘perpendicular’ spring operates at right angles to the base plate

DESIGNER’S NOTEBOOK

- Design springs to be lightly stressed in the working position.
- Working strain should not exceed 2.5%.
- Anchor 'in-plane' springs to resist rotation.
- Use moulded-through anchors if the position of 'perpendicular' springs is important.

19.5 OUTSERT MOULDING

In the previous Design Guide we discussed how to create spring features in outsert mouldings. Now we will look at a specialised type of spring - the snap fit. Snap fits are common in moulded plastics and are one of the most cost-efficient and 'green' ways of assembling and attaching items. We examined snap fits earlier in the Design Guide series: outsert snap fits have the same features and follow the same rules.

To recapitulate briefly, a snap fit works by flexing so it can be pushed past a 'catch' feature on a mating part. Once past the catch, the snap fit 'snaps' back elastically to its original position, so holding the mating part in place. If the underside of the snap fit 'hook' is angled, the mating part can be removed again and the snap fit is releasable. If the angle approaches 90 degrees, removal becomes almost impossible and the snap fit is permanent. The snap fit should be under little or no strain once the mating part is assembled. The principal design requirements are to ensure that the allowable strain for the material is not exceeded during flexing, and that the assembly and release forces are suitable for the application.

The basic outsert snap fit consists of a retaining frame within which the cantilever 'arm' is free to flex. A through hole is necessary to admit the mould core member that forms the hook undercut. Use radii where the cantilever joins the frame. This avoids 'notch-effect' stress concentrations and fractures. Because the frame shrinks away from the metal plate, this design does not provide an absolutely precise location. If that is required, the design should be modified to include moulded-through anchors.

The outsert snap fit can perform a number of useful tasks. We can attach components or assemblies by pressing them between opposed pairs of snap fits. All that is necessary is to provide a catch feature such as a flange on the component. The flange should not be too shallow, otherwise the snap fit cantilever will be short and it will be relatively highly stressed when deflecting. The presence of the snap fit frame means that the component will be held clear of the baseplate but this is not generally a disadvantage.

Another use is to secure a second plate, such as a printed circuit, parallel and offset from the outsert baseplate. The correct spacing is provided by a pillar extension on the retaining frame. For accurate location, the pillar can be provided with a pin that fits into a registration hole in the board. The board needs a second hole to admit the snap fit hook and this should have sufficient clearance to allow the cantilever to flex as it passes through the board. Three or four snap fits will typically be used to locate a circuit board. A large board may require additional snap fits or support pillars but there need only be two or three locating pins altogether, otherwise fitting becomes difficult.

The same principle can be used to secure a second outsert moulding and in this way complex assemblies can be built up.

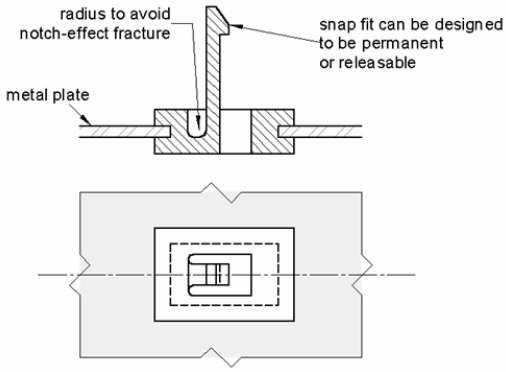

Snap fit basics

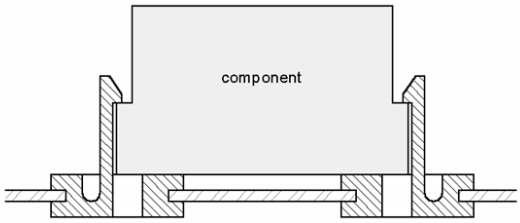

Secure components and assemblies with multiple snap fits

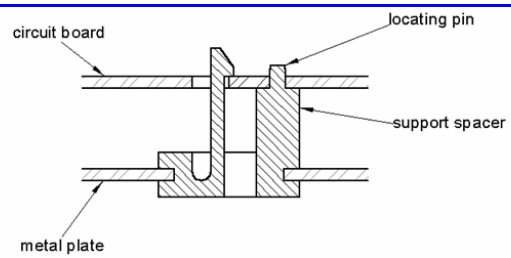

Spacer snap fit for joining plates

DESIGNER'S NOTEBOOK

- Use radii to avoid notch-effect failures.
- Design mating parts so the snap fit is not too short and highly stressed.
- Don't use more than two or three board locating holes.

19.6 OUTSERT MOULDING

So far in these Design Guides on outsert moulding, we have covered the basic principles and the way in which designs are built up by variations on key components that are combined on a baseplate. We have discussed many of these key components and this month it is the turn of guides and sliders.

Outsert mouldings are frequently used for mechanical and electro-mechanical assemblies and there is often a need to transfer motion from one point to another; for example, from a front panel to a switch. This can be accomplished by a mechanical push rod or slider but it needs to be accurately guided and supported. Fortunately, this is easy to arrange in outsert moulding.

There are two main variants; the slider can travel parallel or perpendicular to the baseplate. In either design, the slider may be of metal or plastics construction. A metal slider is likely to be ribbed or U-shaped for stiffness so the guide surfaces will have to be designed to conform. A plastics slider often works better if is made of a different material to the guides. Acetal is the most commonly used material for outsert moulding, and therefore for guides. Sliders of polybutylene terephthalate (PBT) work very well with these.

Parallel sliders can be supported by opposed pairs of guides that provide horizontal and vertical bearing surfaces. Of course, it is necessary to arrange a small running clearance on the vertical surfaces. As always in outsert moulding, we have to be aware of problems that can arise because the moulded parts shrink while the baseplate does not. For this reason, the vertical bearing surfaces on the guides should coincide with an anchor point. This ensures they remain fixed relative to the baseplate and therefore to each other. It is possible to have a one-piece guide that is recessed in the top to accept the slider but this should only be done if the overall length of the guide can be kept short to avoid shrinkage and distortion problems.

A number of pairs of guides can be arranged to give better support and alignment to a long slider, and it is also possible to provide snap fits to hold the slider in a running clearance against the horizontal bearing surfaces.

Perpendicular sliders work at right angles to the baseplate and the simplest guide design takes the form of a frame with a central hole that provides the bearing surfaces. However, the frame will shrink slightly away from the baseplate so we sacrifice some positional accuracy. If positioning is crucial, the frame design should be extended to include three anchors, in the style of an outsert boss.

Another problem with perpendicular sliders is that the bearing length is limited and it is usually not possible to provide more than one guide. The situation can be improved a little by extending the guide on whichever side of the baseplate is convenient. However, the need for moulding draft on the guide hole limits the value of this idea.

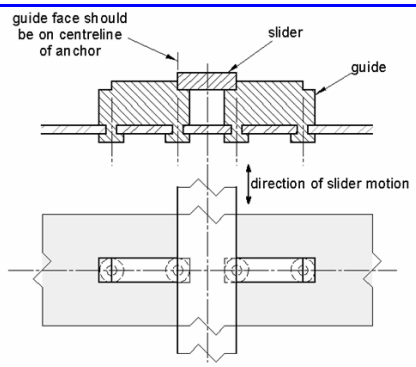

Parallel sliders supported by pairs of guides

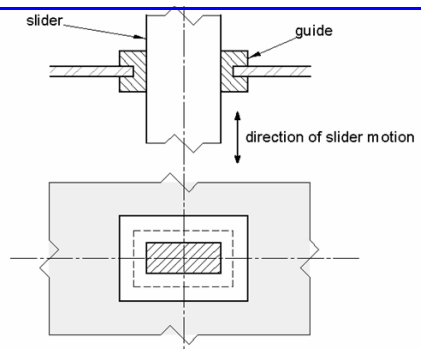

Perpendicular sliders have only one guide

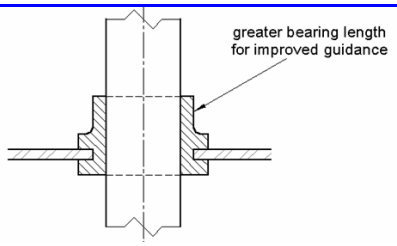

Improved guide for perpendicular slider

DESIGNER'S NOTEBOOK

- Plastics sliders run best against dissimilar materials.
- Design parallel slider guide bearing faces to coincide with anchors.
- Perpendicular sliders are more difficult to position and align.

19.7 OUTSERT MOULDING

In this Design Guide we discuss the last of the key components used in outsert moulding - rotary parts. These depend on two important considerations: there is no adhesion between the moulded part and the metal baseplate, and the moulding tends to shrink away from the anchor hole in the plate. These characteristics mean that an outsert part anchored to the baseplate by moulding through a single round hole can be twisted on its axis. This makes a rotary component and we can use the idea to perform any function that depends on rotation.

In outsert moulding, we always have to design for the conflict between the moulded parts that shrink and the metal baseplate that does not. For rotary parts, this conflict works both for and against us. Axial shrinkage tends to make the flanges of the moulded part grip more tightly on the baseplate, so opposing motion. We can control this tendency by reducing the thickness and the contact area of at least one of the flanges. It is usually not practical to minimise both flanges, as one of them will have a functional purpose such as a cam or a gear. Of course, the thickness and the contact area of the minimised flange must still be sufficient to stand up to the mechanical loads anticipated in service.

Radial shrinkage makes the shaft of the moulded part shrink away from the baseplate hole in which it is formed and this makes rotary motion easier. The shrinkage is proportional to the hole diameter and the shaft wall thickness. As these figures increase, so the torque required to turn the moulded part decreases. There is one other factor that plays a vital part. If the hole in the baseplate is not truly round or is burred it will tend to key to the moulded part and prevent it turning. Baseplate holes for rotary parts must be clean, smooth and free from burrs.

All these considerations make it impossible to determine the torque required to turn a rotary part purely by design. If the actual torque is important, it is best to start with a flange thickness and contact area that are expected to be rather too small. A flange 1mm to 1.5mm thick and overlapping the baseplate by 2mm per side would be a reasonable starting point for typical applications. After making trial mouldings, both can be increased progressively by removing metal from the mould until a good result ensues.

Rotary outsert parts are best suited to occasional and intermittent motion rather than constant running. One common application is as a manually-operated cam for imparting motion to another component or assembly. The moulded part is provided with an axially-knurled grip to make it easier to turn, and the cam faces can easily be arranged to create motion that is either perpendicular to or parallel with the baseplate. Obvious variations to the design could limit the rotary travel by means of stops and could substitute more elaborate profiles or strikers for the simple cam forms shown in the diagrams.

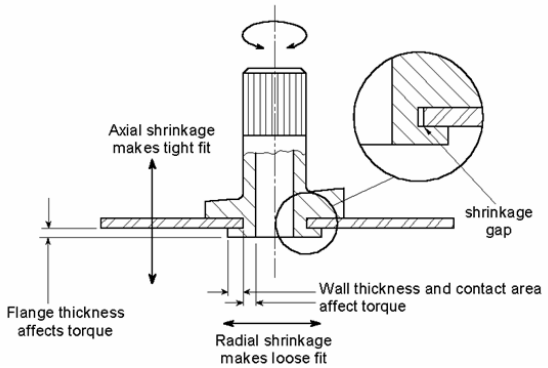

Factors affecting the performance of rotary parts

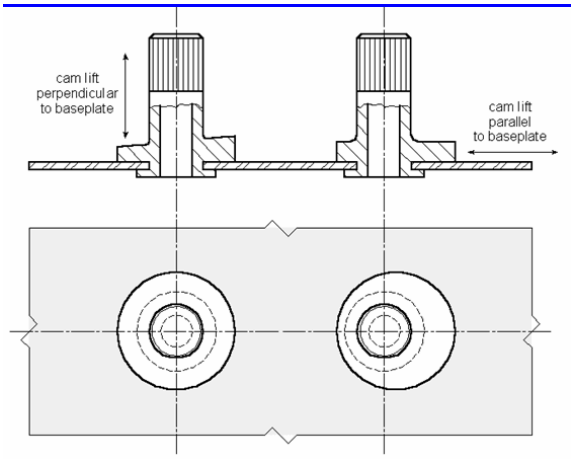

Typical cam applications

DESIGNER'S NOTEBOOK

- Turning torque depends on flange thickness, contact area and shaft dimensions
- Baseplate hole must be clean, smooth and free from burrs.
- Use rotary parts for occasional and intermittent motion.

19.8 OUTSERT MOULDING

Rotary parts are mouldings anchored to the metal baseplate by a single round hole. Radial shrinkage creates a small clearance that allows the part to rotate in the hole. We now look at rotary parts that depend on bending the metal baseplate after the moulding operation.

We can use this technique to create a drive system for translating motion. We start by moulding two bevel gears side by side on a flat metal baseplate, using the principles for rotary parts. Now if we bend the metal plate in a secondary operation, along a line between the two components, the gears will mesh and motion can be transmitted from a driver to a driven member.

Typically, the driver takes the form of a knurled knob for manual operation. The driven component needs some means of transmitting motion to another component or sub-assembly. This can be a long integrally moulded shaft but is more likely to be a metal shaft that is moulded in or pressed in after moulding. Other possibilities include a flexible drive shaft that can accommodate any inaccuracies in the assembly, or moulded-in splines or dogs that engage with mating features on the device that is to receive the motion.

The example shows gears of equal diameter with a 45° bevel. These mesh when the baseplate is bent through 90° along a line equidistant between the gears. Obviously, the actual gear centre spacing depends on the gear diameters, on the projection of the gear from the baseplate, and on the bending radius. By altering the bevel angle, we can create gears that mesh when the bending angle is something other than 90°. This may be useful in translating motion to a particular location. If we make one gear different in diameter to the other, we can introduce the idea of gear ratios so that rapid or very fine adjustment can be derived from the manually-turned driver.

Notice that once the plate is bent, each gear is held in position relative to the plate by the other. This means in principle that we can dispense with the flange on either or both of the gears. If they are omitted, the resulting gear train will turn easily at low torque. On the other hand, the flanges do ensure that everything remains in correct alignment during the bending operation. This gives us the possibility of creating a gear train in which one component is a moulded flanged rotary part and the other is a metal flangeless geared part which is simply pushed into a baseplate hole after moulding and then secured by the bending operation.

If we provide two rows of driver and driven rotary moulded parts, then a single bending operation can be arranged to mesh all the pairs simultaneously. This can be used in radio, TV and electronic equipment to provide manual adjustment from a front panel for a bank of trimmers or potentiometers.

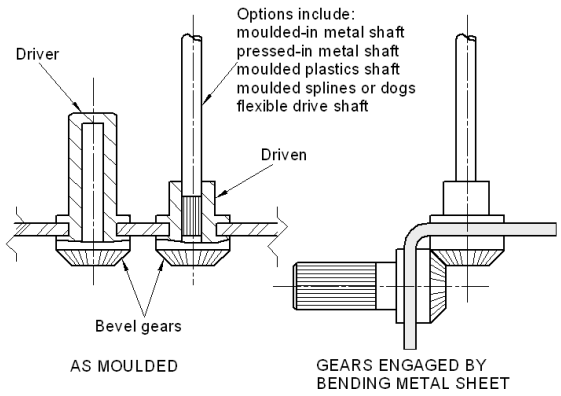

A bevel gear train created by bending the baseplate

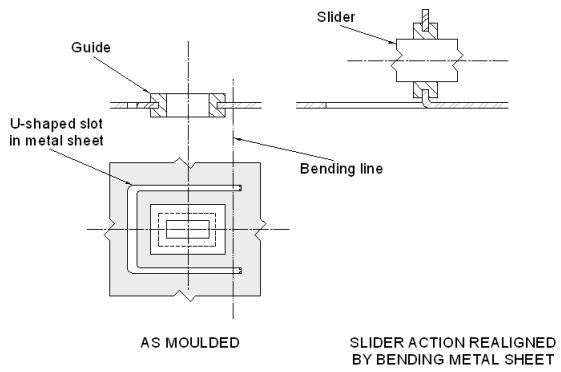

Baseplate bending offers many design possibilities

DESIGNER'S NOTEBOOK

- Baseplate bending is a post-moulding operation.
- Rotary parts and bends can be combined to make gear trains.
- Bending simplifies moulding because parts can be created in the direction of draw then realigned afterwards.

19.9 OUTSERT MOULDING

Outsert mouldings consist of a number of small and separate plastics components injection moulded on a metal baseplate. This means that each individual moulding needs its own gate and feed system. This can be achieved by using three-plate moulds or hot runner systems but this is a relatively expensive solution. You can get the cost down by feeding a number of mouldings from a single three-plate or hot runner drop, by arranging a runner system that runs across the surface of the metal baseplate.

In conventional moulding you would do this by means of a straight runner that takes the shortest route between the mouldings. However, this approach will not succeed in outsert moulding because the runner shrinks while the mouldings are held rigidly in position by the anchor holes in the metal plate. The shrinking runner creates a stress in the moulded parts which may result in deformation and dimensional inaccuracy, or even fracture.

The answer to this problem is to design the runner as a flexible spring that can easily deform in the plane of the baseplate by sliding over the metal surface. One way to do this is design the runner as a S-shape. Now when the runner shrinks, it can deform to a flatter S-shape without imparting stress to the mouldings. Any runner shape that provides this freedom to deform easily can be used in outsert moulding. Two alternatives, perhaps easier to machine in the mould than the S-shape, are the 'bridge' shape and the diagonal runner.

The cross-sectional shape of the runner is important. It must be kept relatively narrow if the runner is to be flexible in the plane of the baseplate. If the runner must be enlarged to reduce resistance to flow and pressure drop, this should be done by making the runner deeper rather than wider. The resulting cross-sectional shape is not ideal as a flow channel but all design is a compromise, and in this case the paramount consideration is flexibility in the runner.

The optimum feed system will vary according to the design of the outsert moulding itself. It is best to use direct feeds instead of long runners for components that are spaced widely apart. Direct feeds may also be advisable for close-tolerance precision components. However, where a number of components are grouped closely together, the best plan is to create a runner system served by a single hot runner or three-plate drop. Very small and closely spaced components can be fed in series, with small runners leading from one to the next. As in conventional moulding, you must always design within the flow capacity of your material and machine.

These considerations mean that outsert mouldings are nearly always hybrids using an appropriate mix of direct feeds and runner systems. It becomes a matter of choice whether to remove the runners. If they are correctly designed to be small and flexible, it is usually more economical to leave them in place, provided they do not interfere with the functions of the assembly.

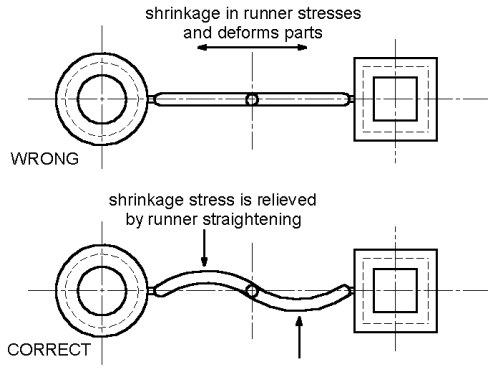

Design outsert runners as flexible 'springs'

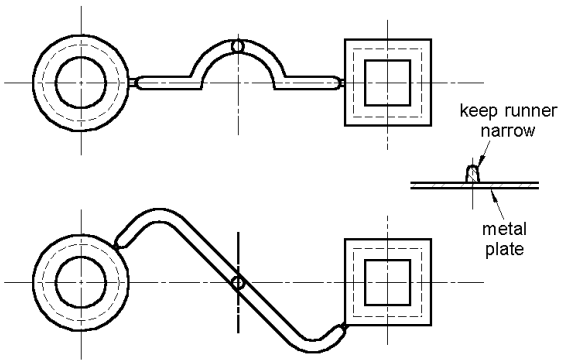

Alternative runner designs

DESIGNER'S NOTEBOOK

- Instead of providing direct feeds to every moulding, it is economical to user runner systems travelling across the baseplate.
- Do not use rigid straight runners.
- Design runners as flexible springs that can deform to absorb shrinkage.
- Runners must be kept relatively narrow.

24.1 DESIGN INFORMATION

In these Design Guides, we have outlined the principles for designing injection moulded products. We have been concerned with functional design rather than aesthetics; concerned about the way to design mechanical details to make the best of the materials and the process. The key word is outline. There is much more to be said on every topic we touched upon so we will conclude the series with four guides on sources of information for designers, starting now with a look at books. The titles in this selection are all in print and available now in the UK.

The book that comes closest to the concept of the Design Guides is Campo's ***The Complete Part Design Handbook*** (Hanser, 2006, 3-446-40309-4). It concentrates on injection moulded parts and devotes some 300 pages in the centre of the book to design elements such as walls, ribs, hinges, gears, bearings, springs, pressure vessels, and assembly methods. The treatment involves copious diagrams accompanied by design equations and some design data. All this is topped and tailed by extensive sections on materials, engineering design, the effects of processing, mould design, testing, and cost analysis. It is a blockbuster of a book, weighty in every sense and not cheap, but if you only buy one book on plastics design, this should be it.

Also in the spirit of the Design Guides are two books that concentrate on specific aspects. ***Designing Plastic Parts for Assembly*** (Hanser, 2006, 3-446-40321-3) by Paul Tres is the 6th edition of the work – a sure sign of a book that meets a need. Hot air staking is omitted but otherwise Tres covers the field, concluding with a chapter on snap-fits. And it is snap-fits – the greenest way of assembling plastics parts – that are the theme of ***The First Snap-Fit Handbook*** (Hanser, 2005, 3-446-22753-9) by Paul Bonenberger. The author is something of a snap-fit evangelist and approaches the topic from a Design for Assembly (DFA) standpoint, so the emphasis is on complete snap-fit systems rather than isolated snap-fit features.

Two further books look at design for plastics in a way that is perhaps closer to the plastics engineer than the product designer. Guther Erhard's ***Designing with Plastics*** (Hanser, 2006, 3-446-22590-0) covers principal design elements and includes relevant mechanical engineering principles, but also devotes many pages to the influence of plastics materials and processing on the final product. ***Plastics Engineered Product Design*** (Elsevier, 2003, 1-85617-416-6) by Dominick and Donald Rosato takes a more eclectic approach and its coverage of product design ranges far beyond injection moulding. Dense pages and a lack of white space give the book a rather old-fashioned look that makes it harder to assimilate the contents.

By far the most handsome book is Chris Lefteri's ***Plastics 2*** (Rotovision, 2006, 2-940361-06-1). It is also the most designerly. There are few numbers and no equations. Instead it is a designer's source book of plastics ideas and inspirations. However much you know about plastics, you will find something inside to surprise and inform.

The ***Moldflow Design Guide*** (Hanser, 2006, 3-446-40640-9) edited by Jay Shoemaker is another good-looker, with colour diagrams throughout. This certainly is a plastics engineer's book. Coverage of design elements is brief but the book is strong on process-inspired defects that designers should know about. One for the moulder.

Finally, and expanding on the theme of what can go wrong, is Myer Ezrin's ***Plastics Failure Guide*** (Hanser, 1996, 3-446-15715-8). Ezrin groups the many ways plastics parts can fail under design, material, processing and service conditions, and illuminates these by case studies.

DESIGNER'S NOTEBOOK

- All the books in this review were supplied by and are available from Plastics Information Direct, a division of Applied Market Information (http://pidbooks.com).

24.2 DESIGN INFORMATION

The Design Guides concludes some guidance on sources of information for designers in plastics.

Rational design means following proven principles and applying them using the right numbers. Designers need to know about the measured properties of the plastics they are working with. In short, you need the data sheet. Can you get what you need from the internet? Yes you can, and a surprising amount is free.

We will start with the host with the most. The IDES Prospector database currently holds an incredible 70,000-plus plastics grades. That total includes discontinued materials, making this resource particularly useful when you need to find replacements or equivalents. The free version gives you access to all these data sheets via three different search methods. You can search by keyword, product, generic family, manufacturer, application, form and filler. The database is global but the system makes it easy to eliminate anything that is not available in Europe, leaving a mere 32,000 grades to choose from. The paid-for version adds side-by-side comparisons, 1-click alternative finding, automotive-approved searching, selection by key design parameters, and viewing and exporting of multi-point curve data.

Probably the best-known name in plastics data is CAMPUS, the initiative initially of German plastics manufacturers that ended the frustration of incompatible datasheets that defied comparison. CAMPUS plastics datasheets are all drawn up to strict ISO standards, and the system is particularly strong on engineering plastics. Each manufacturer in the CAMPUS consortium supplies its own free dataset independently but they all run on common free CAMPUSS database viewing, sorting and selecting software. CAMPUS WebUpdate allows you to download the free datasets of all manufacturers in a single step but the free software requires you to search each database separately. This is no problem if you just want to find datasheets but it does make comparisons laborious.

There are several ways around that. CAMPUS WebView is a web-enabled version where you can access data from all the producers simultaneously. The user interface is simple but search functionality is limited. Alternatively, MCBase, a commercial desktop program from M-Base Engineering + Software provides all the functionality and more of the CAMPUS software but consolidates all the producer datasets so you can select and compare across the board. The online equivalent is the Material Data Center. It has the added advantage that data is always up to date.

Another must-have free resource is MatWeb, a searchable database of materials datasheets. As well as thermoplastics and thermosets, MatWeb covers metals, alloys, ceramics, semiconductors, fibres and other engineering materials. Any site visitor can use MatWeb immediately but free registration provides more tools and there is a further layer of functionality for paying premium users.

Finally, not free but extremely powerful is the CES Polymer Selector from Granta Design. For grade data the system links to IDES and Campus but relies for initial selection on Granta's unequalled database of more than 550 generic plastics types. Crucially, there are no blanks on the generic datasheets. Every material has a value for every characteristic, so nothing is ever ruled out simply because the data that would have qualified it is missing. Selection in CES Polymer Selector is by means of Ashby charts that allow for sophisticated comparisons based on combinations of properties, including cost considerations. These are not just simple prices but the more telling cost per unit of property or functionality.

IDES	www.ides.com
CAMPUS	www.campusplastics.com
M-Base Engineering + Soft-ware	www.m-base.de
MatWeb	www.matweb.com
Granta Design	www.grantadesign.com

24.3 DESIGN INFORMATION

We continue the search for online design information with a look at plastics portals and a user-friendly selection system from Distrupol.

Independent plastics portals were among the first models to be tried in the early days of the web boom. Many have since faded or slipped away altogether but one of the success stories is French company SpecialChem, whose sites offer a storehouse of information and guidance for designers in plastics. SpecialChem of course is known as the rescuer of Omnexus, the multi-supplier trading platform. SpecialChem transformed Omnexus by stripping out trading and augmenting information and technical services. The result is a key resource where design figures prominently. Let's head straight for the Design & Solution Center. First up is a plastics selector system. This uses generic data covering almost 160 thermoplastics and thermoplastic elastomers. Here you can find properties, screen and select by up to four criteria, search by application, and plot spider charts comparing as many as five characteristics for up to five materials. Importantly, the generic datasheets include strengths and weaknesses, and a cost index.

Another Omnexus component, the Solutions Datasheets library, can save you a lot of searching. The datasheets summarise key application solutions from leading suppliers and provide links for further information. The site's Plastics Channels also help you to home in on what's relevant to your project. Channels cover a variety of topics arranged by markets, technologies and efficiencies, and include a dedicated part design and manufacturing channel. An alerts service gives you a weekly email update on all that is new in your chosen channel.

Designers need to do new things so there is an emphasis on innovation and learning without leaving the workplace. The news section of the site collates articles and R&D highlights, while a bi-monthly emailed Innovation Review helps to keep you abreast of the latest developments. Learning is handled by web seminars, training courses and learning on demand. Web seminars are free online live presentations given by industry experts. All you need is a web browser and a telephone line. You can also catch up on a back catalogue of almost 50 past web seminars. The training courses carry a fee and are longer and more formally organised live web lectures. Learning on demand is also a chargeable service but one that is available 24/7. The service gives access to a catalogue of video presentations priced in the €100 to €200 bracket.

Creativity is another key characteristic of the designer. Omnexus uses the visual medium of the web to provide striking tools for working with plastics special effects and lighting. These resources are based on the products of Engelhard and Degussa respectively. Onscreen simulators allow you to see, for example, the effect of edge lighting and back lighting with various colour combinations on Degussa's acrylics.

Other SpecialChem websites with resources for the plastics designer include Polymer Additives & Colors, and Bonding & Fastening. These sites are organised on the same lines as Omnexus and include similar resources appropriate to the site specialisation.

The Distrupol take on polymer selection comes in the form of its downloadable Comparator Cards. The company's Product Information Centre includes a conventional grade-specific property-based selector but at the concept stage, designers often need to deal in generalities rather than specifics. The Comparator Cards use icons, traffic-light suitability symbols, plots and charts to get the facts across in visual and direct manner. The cards recognise that designers deal in applications and attributes, so Distrupol has developed comparators for food and drink, clarity, flame retardancy, flexibility, high temperatures, toughness and strength, electrical, metal replacement, and medical. Naturally, the cards concentrate on Distrupol's portfolio of plastics but it is a wide one covering more than 30 supplier-brand families. The scope can be judged by the Product Information Centre which lists no fewer than 2,233 grades available in the UK.

Omnexus	www.omnexus.com
Polymer Additives & Colours	www.specialchem4polymers.com
Bonding & Fastening	www.omnexus4adhesives.com
Distrupol	www.distrupol.com

24.4 DESIGN INFORMATION

The major manufacturers of thermoplastics have a vested interest in appropriate material choices and good design. They want successful applications, satisfied customers and a public at ease with plastics. The manufacturers have long been leaders in providing design information, and indeed, in codifying design engineering technologies, particularly for what we loosely know as engineering plastics. Thanks to the internet, what was once an expensive exercise in print publication and distribution by representative, is now an economical online operation in which manuals and tools are available to all, around the clock.

Let's see what some of the majors have to offer, starting with **DuPont**. Materials property and safety data sheets are there of course – a standard on all such sites, and so are selection systems, with a choice of Campus or DuPont's own IDES-powered system. 'Designer's Corner' looks promising. Here you can access DuPont's Engineering Design magazine, a range of design ideas, and a post-moulding section where finishing and assembly techniques are discussed. Further support comes from case studies, seminars, and 'Collaboration Rooms' where you can work with DuPont experts. In the 'Processing Corner' you will find a downloadable PolyCost part price estimation on Microsoft Excel spreadsheet format. Links on most pages take you to a literature library where scores of design articles, guides and manuals are available for downloading.

Dow too has a massive library onsite, and it is particularly easy to locate what you want. You can navigate by product, market or process. A product finder help designers to select appropriate materials by defining market, application and manufacturing process.

Designers are always inspired and emboldened by what other people have done, so they will particularly appreciate **Ticona's** picture library which is searchable by market, process, material or keyword. The 'TechInfoCenter' contains a library of downloadable design guides and manuals, while its materials database makes it easy to compare different options.

GE Plastics was renowned for its design initiatives and the tradition lives on under its new identity as **Sabic Innovative Plastics**. The website includes online calculators for stiffness, flow, snap-fits, fatigue, part cost and thermal analysis. On top of that, there are quick calculators for shear rate, thread failure, weight, modulus across the flow direction, tooling volume, boss design, thermal stress, thermal expansion and beams.

BASF is another to provide design software tools. Its calculators for beams, screws and snap-fits come as downloadable ZIP files that you extract and install as executables on your own PC.

Bayer MaterialScience maintains separate 'TechCenters' for plastics, polyurethanes, thermoplastic polyurethanes, and coatings, adhesives and sealants. its Plastics TechCenter is the gateway to a literature library and a number of design aids, including a test version of Bayer's software tool 'Design + Processing Properties' that provides calculations to support the design of parts and moulds. D+PP works via a downloaded and locally-installed web client which accesses a central Bayer DPP server via the internet. While onsite, be sure to check out Fantasia, a link to dedicated BASF site that helps designers visualise the use of colours and special effects on plastics parts.

This brief survey gives only a glimpse of what is available to the designer from just of few of the many manufacturers of thermoplastics. So the message is build up your bookmarks to make the most of these free resources.

BASF PlasticsPortal – Europe	http://www.plasticsportal.net/wa/plasticsEU~en_GB/
Bayer MaterialScience	http://www.bayermaterialscience.com/
Dow Engineering Thermoplastics	http://plastics.dow.com/plastics/eur/
DuPont	http://plastics.dupont.com/
SABIC Innovative Plastics	http://www.geplastics.com/
Ticona	http://www.ticona.co.uk/

About Econology:

Econology is a plastics industry information service company, with particular expertise in communications and software. The bedrock of the business is a long record of industrial experience and achievement but what makes the company effective is a mastery of information sources and technology. Our strength is knowing where to find and how to use facts and figures, buyers and sellers, media and markets, technology and training, processes and people.

Econology is directed by Clive Maier, a plastics industry professional and a Fellow of the Institute of Materials Minerals & Mining. He writes regularly for leading plastics industry journals circulating in the UK, Europe, and South East Asia. Other publications include a major volume on polypropylene and a number of other books and industry reports.

For further details about Econology, contact:

Clive Maier
Econology Ltd.
4 Norsted Lane, Pratts Bottom
ORPINGTON, BR6 7PG
Tel: 01689 860 686, Fax: 01689 860 686, email: cmaier@btconnect.com