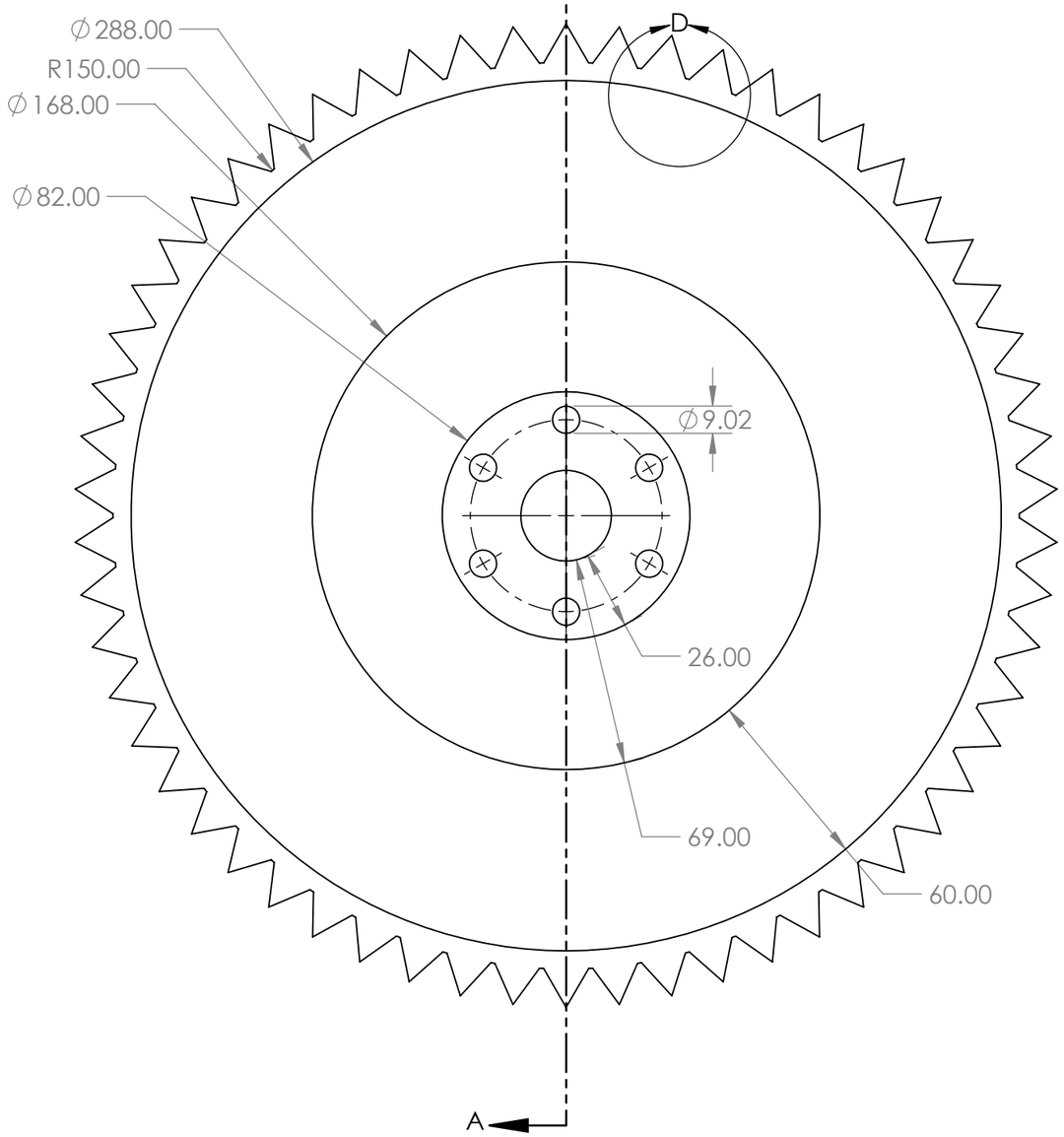

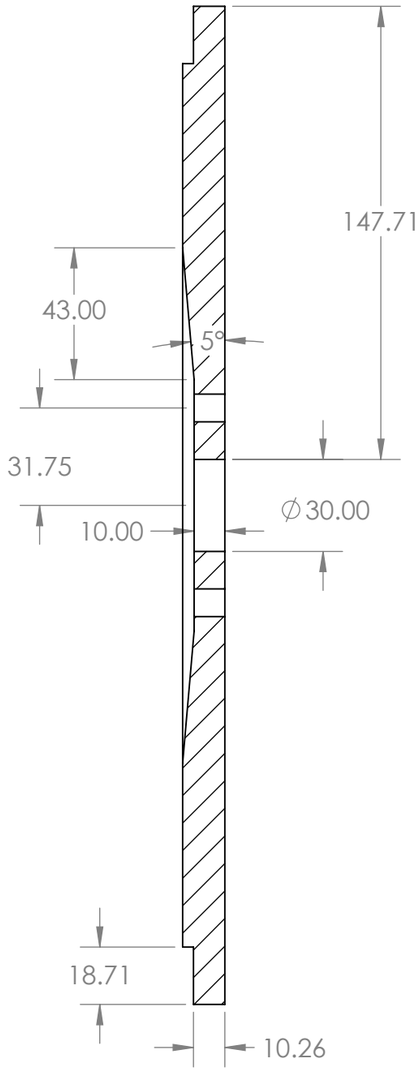

SECTION A-A

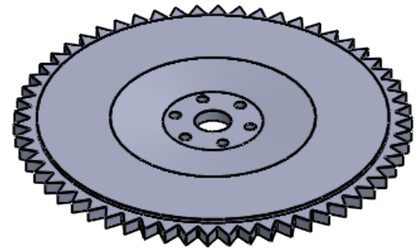

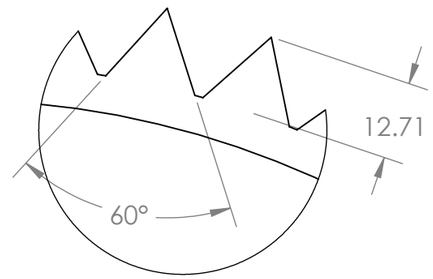

DETAIL D
SCALE 1 : 1

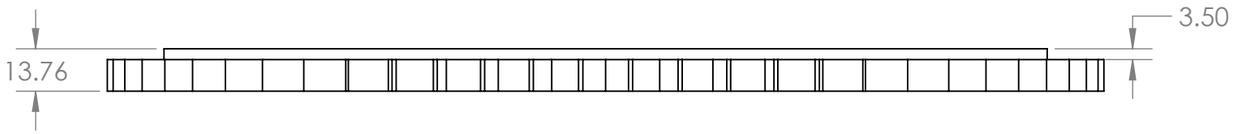

UNLESS OTHERWISE SPECIFIED: DIMENSIONS ARE IN MILLIMETERS SURFACE FINISH: TOLERANCES: LINEAR: ANGULAR:	FINISH:			DEBURR AND BREAK SHARP EDGES	DO NOT SCALE DRAWING	REVISION
	NAME	SIGNATURE	DATE		TITLE: Flywheel	
DRAWN	Rhien Williams	1901571	05/12/21			
CHK'D						
APPV'D						
MFG						
Q.A				MATERIAL:	DWG NO. 002	A3
				WEIGHT:	SCALE:1:2	SHEET 1 OF 1

SOLIDWORKS Educational Product. For Instructional Use Only.

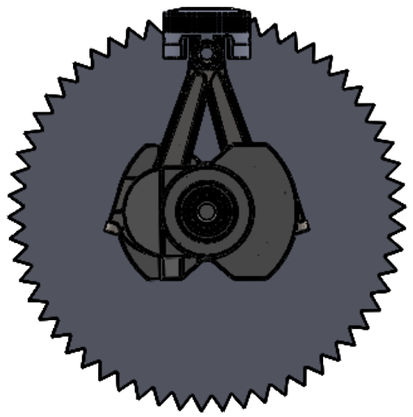

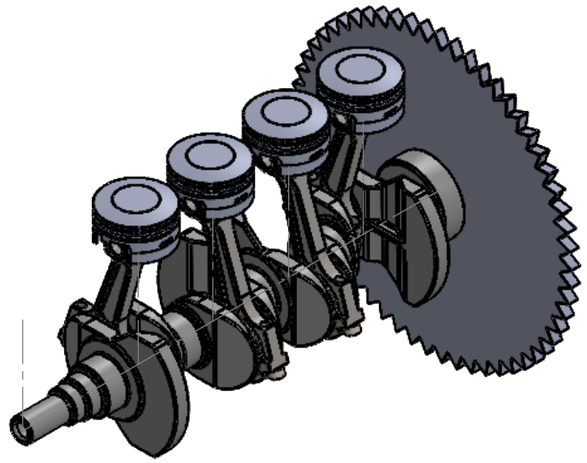

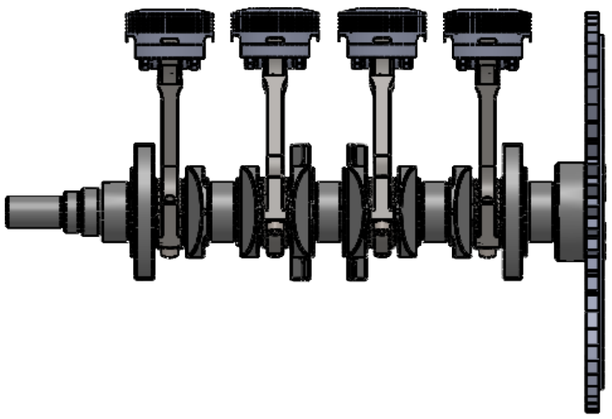

ITEM NO.	PART NUMBER	DESCRIPTION	QTY.
1	Crankshaft		1
2	Flywheel Part 2		1
3	Connecting Rod		4
4	Piston2		4
5	Gudgeon Pin		4
6	BS EN ISO 4762 M8 x 30 - 30C		8
7	BS EN 28676 - M8x1 x 30-C		6

UNLESS OTHERWISE SPECIFIED:
DIMENSIONS ARE IN MILLIMETERS
SURFACE FINISH:
TOLERANCES:
LINEAR:
ANGULAR:

FINISH:

DEBURR AND BREAK SHARP EDGES

DO NOT SCALE DRAWING

REVISION

	NAME	SIGNATURE	DATE
DRAWN	Rhien Williams	1901571	05/12/21
CHK'D			
APPV'D			
MFG			
Q.A			

TITLE:

Crankshaft Assembly

MATERIAL:

WEIGHT:

DWG NO. 001

A3

SCALE:1:5

SHEET 1 OF 1

SOLIDWORKS Educational Product. For Instructional Use Only.