Author: Craig Jones -

Over-moulding Automation Proposal

Capital Expenditure proposal for investment in automation equipment for the over-moulding of flexible and rigid polymer components.

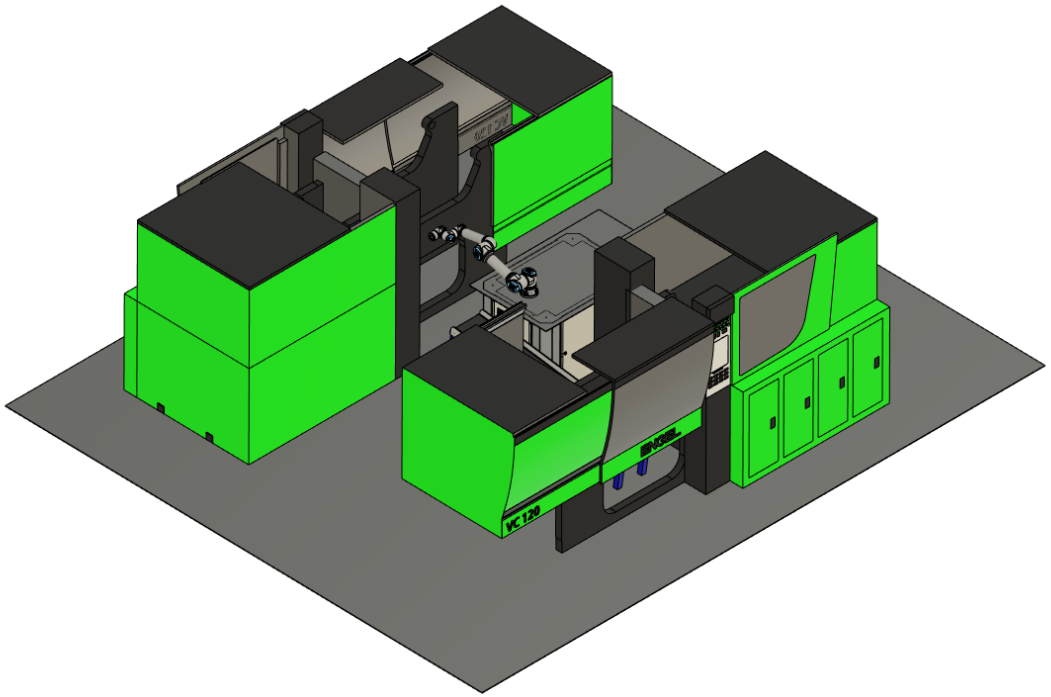

Contents

- Project Background
- Proposed Solution
- Risk Management
- Project Data
- Annual Savings
- Project Screening
- Cost Model
- Project Financing
- Project timing and implementation
- Project Summary

Author: Craig Jones

Background

- Two injection moulding processes
  - Rigid plastic frame
  - Flexible over-mould
- Three High volume products that require manual intervention in the over-moulding process
- Currently using a skilled operator to place the rigid frame into the flexible over-mould tool
- Manual operation issues
  - Increased cycle time
  - Reduced OEE (operator distractions, breaks, shift changeover)
  - Significantly impacts flexibility of resource allocation
  - Storing components in WIP in-between processes

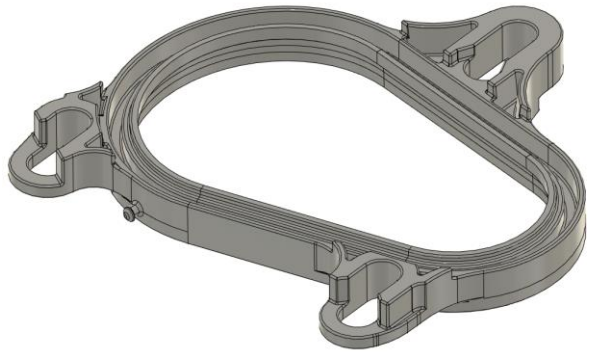

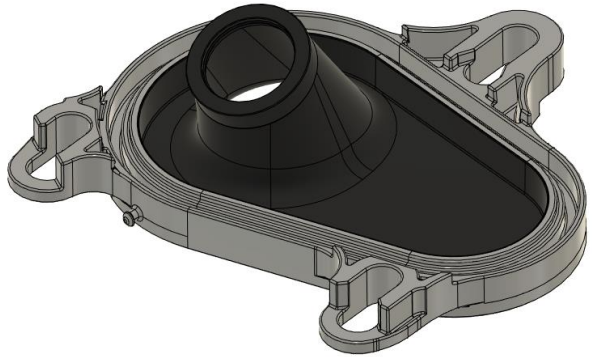

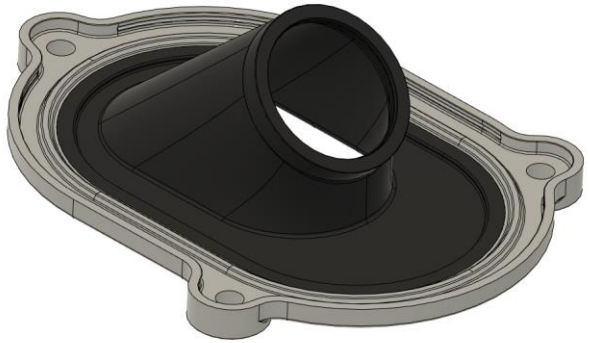

Proposed Solution

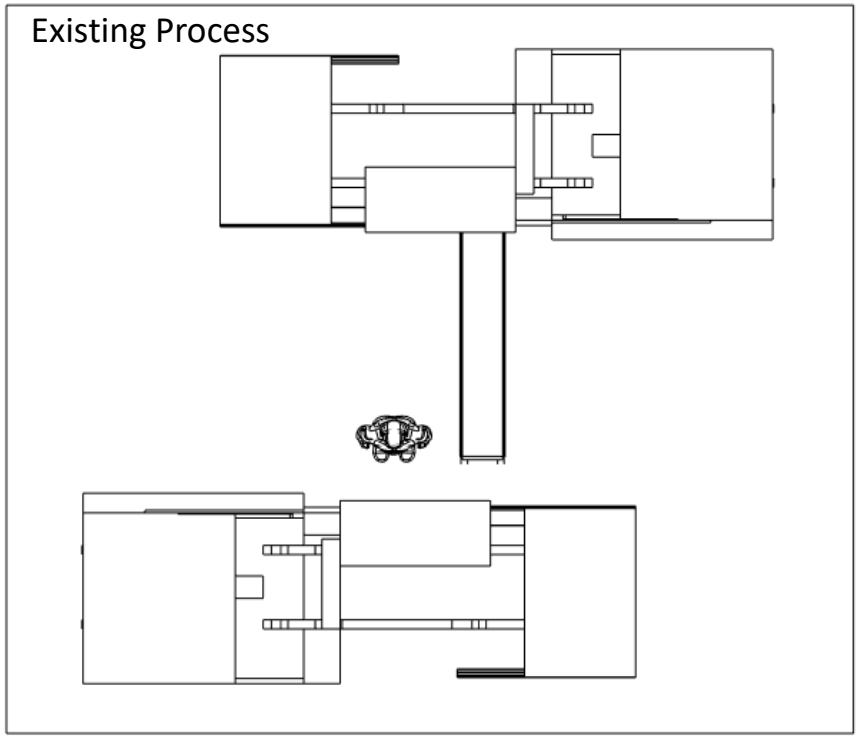

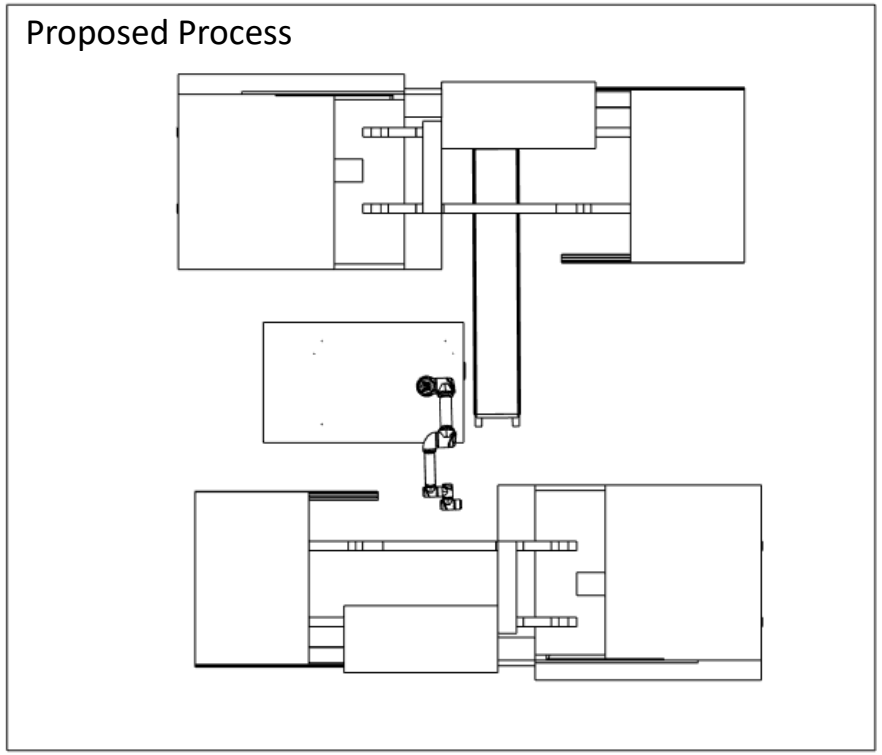

- Rotate machine 180 degrees to allow un-guarded access for robot
- Conveyor will deliver rigid parts to the Robot instead of operator
- Robot will pick and place parts into the mould guided by a vision system
- 1 operator reduced to 1/3 as only required to handle finished parts
- Reduced cycle time by up to 40%
- More consistent cycle time will improve overall equipment efficiency

Risk Management

Production downtime • Risk to product supply • Risk of impacting products that use the same machine	• Build a mock testing area off-site for development and testing • Identify alternative machines to run affected products whilst the implementation takes place
Overstaffing • Risk of over-allocating resource and de-valuing the improvements • Risk of creating redundancies	• Update resource requirement in production planning software • Allocate less skilled operators • Use skilled operators for more value added tasks
Quality issues surrounding the process • Risk of product defects as the new process is developed • Risk of damaging tooling	• Run a capability study and run at rate as part of integration trails • Prove system integration with tooling during off-site testing

Project Data

Rigid Frame

Description	Cavities	Cycle Time (s)	Parts Per Hour	Annual Volume	Annual M/C hours	Cost per hr machine	Annual mc Cost	Cost per hr labour	labour allocation	annual labour cost	Total resource cost
L551 Clamp Ring LH	2	32	225	116,000	516	17	8,764	18	0.5	4,640	**13,404**
L551 Clamp Ring RH	2	32	225	60,048	267	17	4,537	18	0.5	2,402	**6,939**
L460 Lower Clamp Ring	2	32	225	198,000	880	17	14,960	18	0.5	7,920	**22,880**
Non 80 Way Subframe Plate	1	42	86	12,000	140	17	2,380	18	0.5	1,260	**3,640**

Flexible Over-mould

Description	Cavities	Current Cycle Time (s)	Parts Per Hour	Annual Volume	Annual M/C hours	Cost per hr machine	Annual mc cost	Cost per hr labour	labour allocation	annual labour cost	Total resource cost
L551 Secondary Gaiter LH (Overmould)	2	50	144	116,000	806	17	13,694	18	1.0	14,500	**28,194**
L551 Secondary Gaiter RH (Overmould)	2	50	144	60,048	417	17	7,089	18	1.0	7,506	**14,595**
L460 Overmould L460	2	50	144	198,000	1,375	17	23,375	18	1.0	24,750	**48,125**
Non 80 Way Subframe Grommet	1	40	180	12,000	67	17	1,133	18	1.0	1,200	**2,333**

Annual Savings

Annual cost of operations before proposal - Annual cost of operations after proposal = Annual Savings per part

Part	Before	After	Annual Savings
L460	£71,005.00	£39,083.00	**£31,922.00**
L551 LH	£41,598.89	£22,897.11	**£18,701.78**
L551 RH	£21,533.88	£11,852.81	**£9,681.07**
D8 Subframe	£5,973.33	£5,434.00	**£539.33**

Total annual saving = £60,844.18

Author: Craig Jones

Project Screening

- Cost of Investment: £71,350
- Investment per Part = £17,838
- Payback Target = Less than 2 Years`

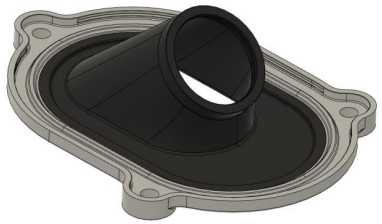

Annual Vol	198,000
Investment Cost	£17,838
Annual Value	£31,922
Payback (Years)	**0.56**

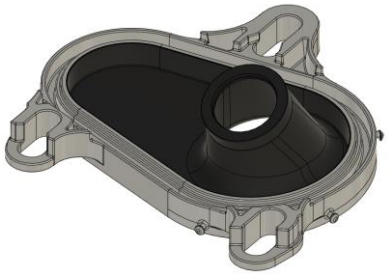

Annual Vol	116,000
Investment Cost	£17,838
Annual Value	£18,701
Payback (Years)	**0.95**

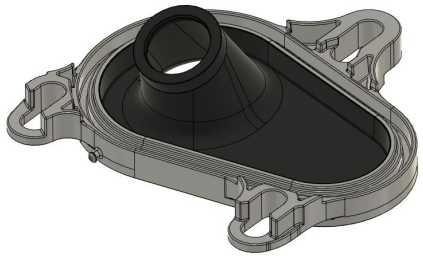

Annual Vol	60,048
Investment Cost	£17,838
Annual Value	£9,681
Payback (Years)	**1.84**

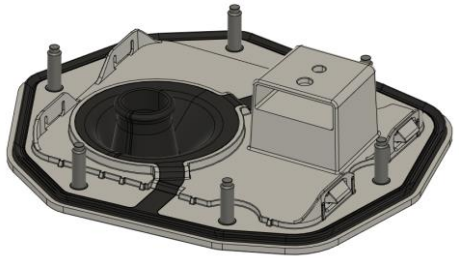

Annual Vol	12,000
Investment Cost	£17,838
Annual Value	£539.33
Payback (Years)	**33.07**

Cost Model

	2022	2023	2024	2025	2026	2027	2028
Year	1	2	3	4	5	6	7
Investment	(71,350)						
Return		60,305	60,305	60,305	60,305	31,922	31,922

Payback	1.18	Years

Discount Rate (WACC)	10.00%

Future Value	(71,350)	54,822.59	49,838.72	45,307.93	41,189.02	19,821.05	18,019.14

NPV	157,648

Profitability Index	2.21

Year	1	2	3	4	5	6	7
Asset Value Depreciated (10% YOY)	£47,850.00	£43,065.00	£38,280.00	£33,495.00	£28,710.00	£23,925.00	£19,140.00

Average Annual Investment	£7,458.57

Average Annual Profit	£25,255.49

ARR	339%

Financing Options

Bank Financing

- Familiar with bank financing
- Bank provide invoice financing
- Not looking to take on debt unnecessarily
- Rather avoid cost of interest payments

Investor Financing

- Family owned business with limited shareholders
- Unable to crowd or angel fund
- No public investment as with a PLC

Internal Capital Financing

- Operating profit
- Steady Turnover
- Global Footprint
- Budgets available for CAPEX investments
- Business case dependant

Project Timing and Implementation

- 20 week project
- Consists of 3 main phases
  - Design
  - Programming
  - Manufacture
  - Testing and Installation
- Reduced Risk of disrupting production through off-site testing
- Lead time streamlined by planning the programming alongside the manufacture
- Main risk of delay is supply chain issues particularly volatile lead times of robotics

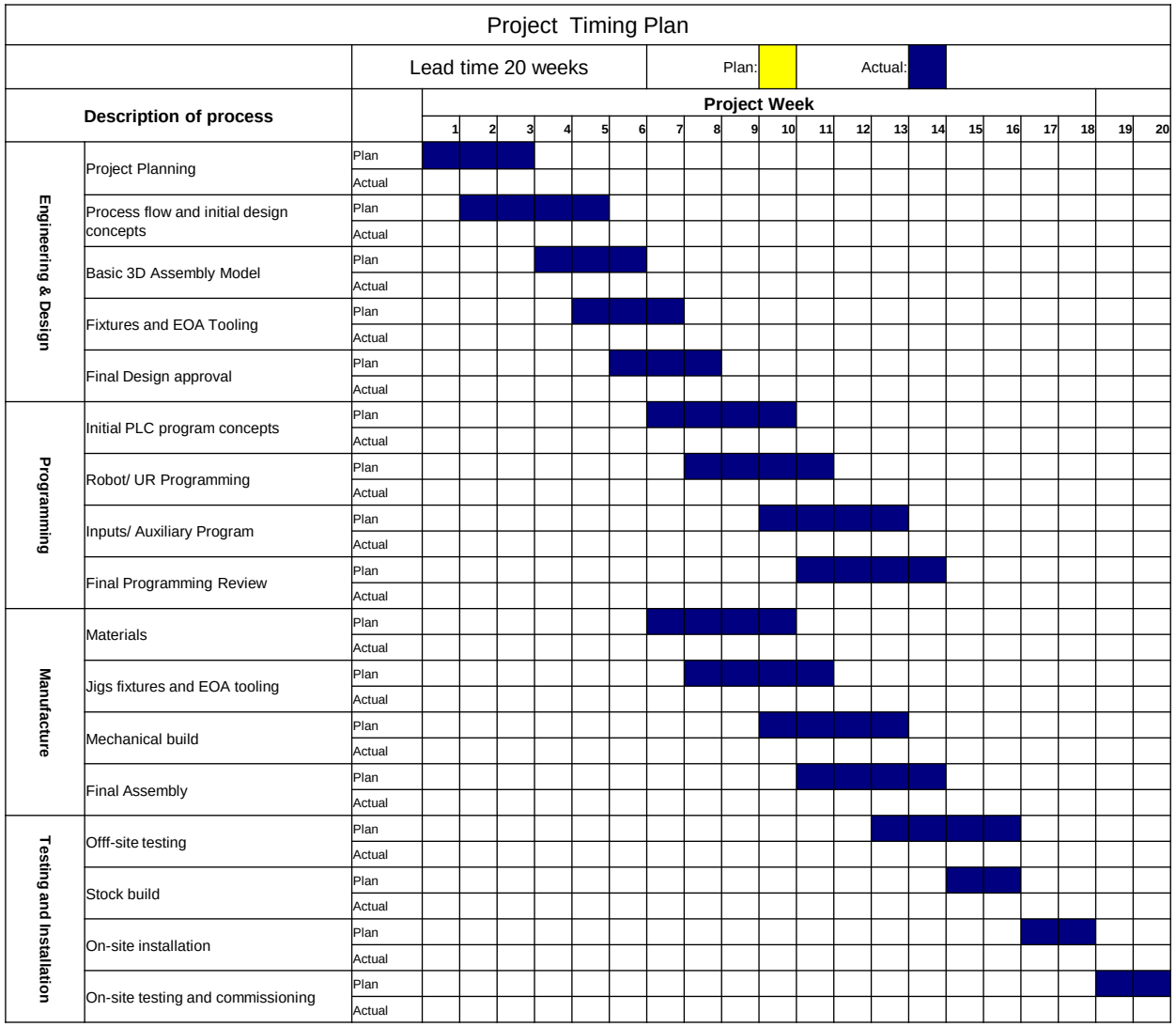

Author: Craig Jones

Project Summary
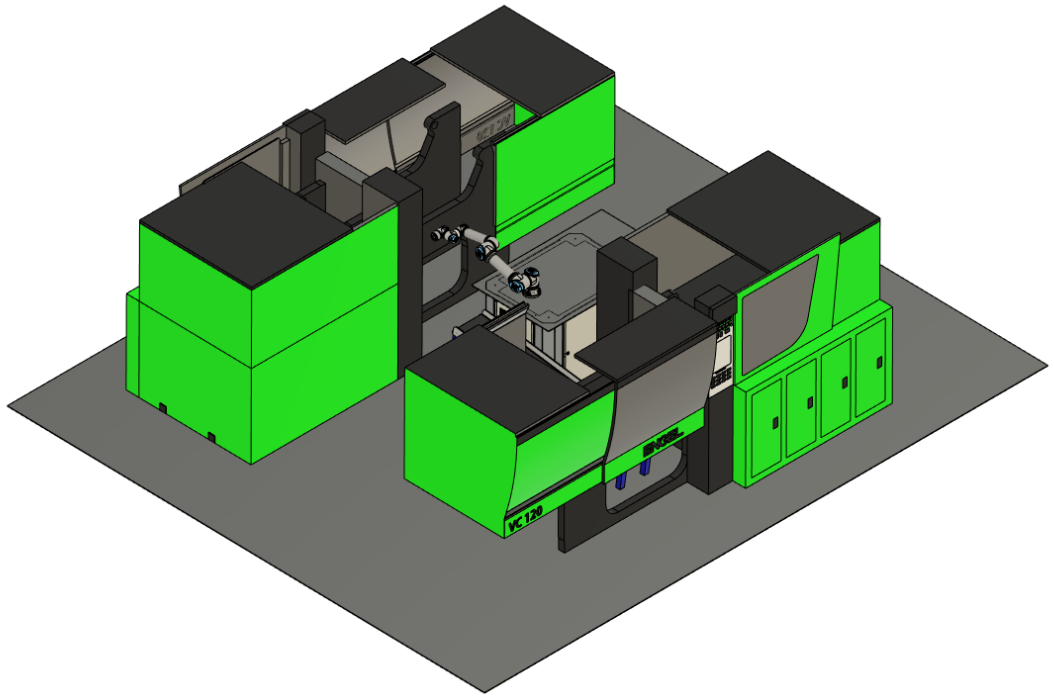
- Project to be carried out over 3 parts
- Payback on investment in 14 months
- Lifetime project profit of £176,000
- Re-allocation of resource to other value-added tasks
- Increase in Operating Efficiency
- Risk reduced in off-site testing building stock for integration
- Spare capacity to integrate further product opportunities