➢ The history of Electronic

Electronics, Branch of physics that deals with the emission, and effect of electrons and with electronic devices. The beginning of electronics can be traced to experiments with electricity. In the 1880 Thomas Alva Edison and others observed the flow of current between element in an evacuated glass tube. A two- electrode vacuum tube constructed by John A. Fleming {1849-1945} produced a useful output current. The Audion, invented by Lee De Forest {1907}, was followed by further improvement.

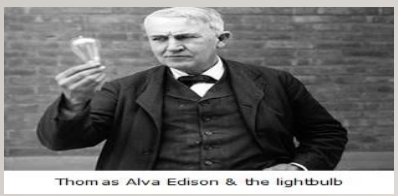

➢ Transistor.

What is transistor? Transistor is a semiconductor device which is transfers a weak signal from low resistance circuit to high resistance circuit. The invention of the transistor at Bell Labs {1947} initiated a progressive miniaturization of electronic component that by the mid-1980s had resulted in high-density microprocessors, which in turn led to tremendous advance in computer technology and s

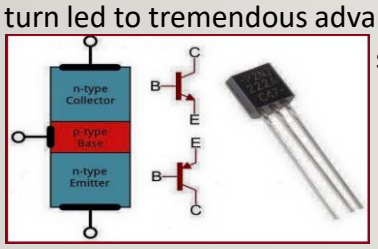

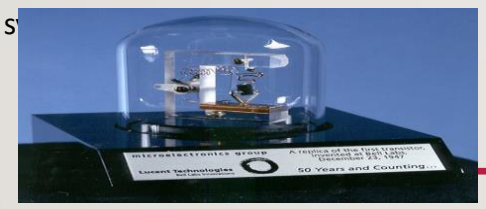

The image show how the transistor work.

Capacitor

In October 1745, Ewald Georg von Kleist of Pomerania, Germany, found that charge could be stored by connecting a high-voltage electrostatic generator by a wire to a volume of water in a hand-held glass jar. After a few years, the renowned English chemist Faraday made some of the major contributions the capacitor technology which includes the concept of dielectric constant and the invention of the first practical fixed and variable capacitors.

A Capacitor is a passive electronic component that stores energy in the form of an electric field. A Capacitor consists of two conducting p mate

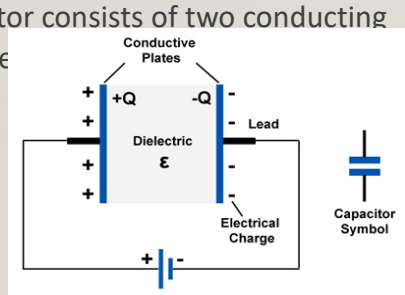

Inductance

Inductance is defined as the tendency of an electric conductor to oppose a change in the electric current flowing through it. Inductance was first found by Faraday in simple yet strange way: he wrapped a paper cylinder with wire, attached the ends of the wire to a galvanometer {a device used to measure electric current}, and moved magnet in and out of the cylinder. The inductance was coined by Oliver Heaviside in 1886. It is customary to use the symbol for inductance, in honour of the physicist Heinrich Lenz. In the system, the unit of inductance is the henry{H}.

Picture shows different type of inductor

➢ Circuit Diagram

A circuit diagram is a visual display of an electrical circuit using either basic images of components or industry standard symbols. The history of circuit diagram involves people finding common ways to describe electronic components. In 1909, the International Electrotechnical commission {IEC} started work to develop a common set of terms and symbols to describe electronic.
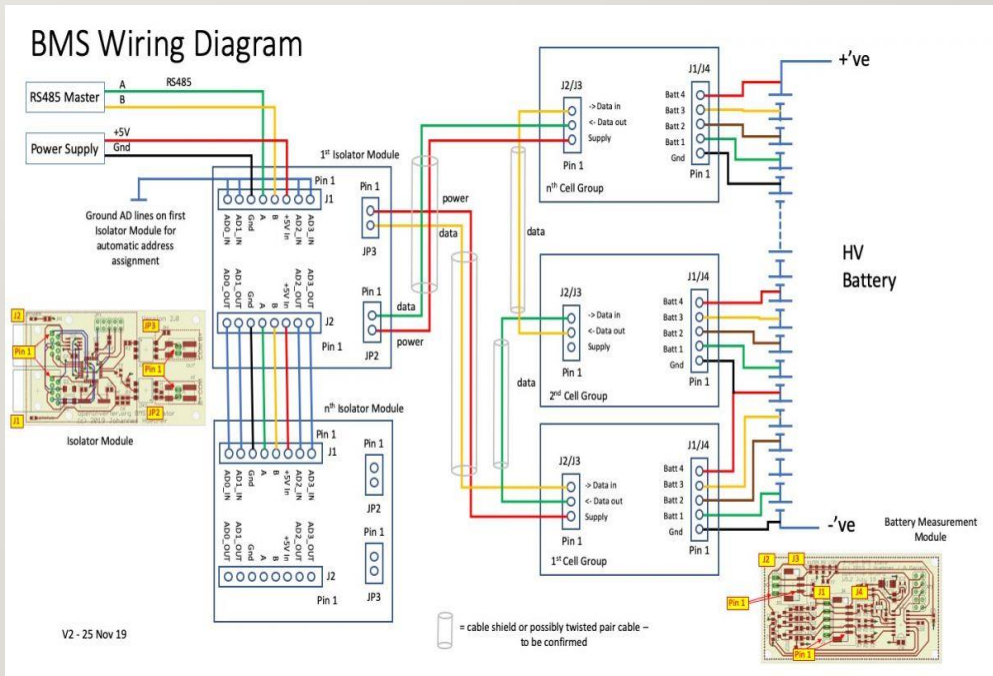
In 1927, Charles Ducas's circuit method placed an electronic path directly onto an printed onto the board through a stencil, and the ink applied could conduct electricity.