Prifysgol Cymru
Y Drindod Dewi Sant
University of Wales
Trinity Saint David

APPENDIX GA36c

LEVEL 6 ASSESSMENT SPECIFICATION

Student name:		**Student ID number:**	
Programme:	**School of Engineering Portfolio**		
Module:	**Structural & Fluid Analysis**		
Module code:	**ACMA6010**	**Contribution to Overall Module Assessment (%):**	**50%**
Lecturer:	**Kelvin Lake**	**Internal Verifier:**	**Rob Goodson**
Assignment Title:	**Designing a butterfly valve Fluid flow assessment**	**Word count (or equivalent):**	3000
Submission deadline:	**30/07/2021**	**Return date of provisional marks & written feedback:**	**20 Working days after the submission date**
Submission method:	All written assessments, where practical and possible, must be submitted via Turnitin unless otherwise instructed by the Lecturer. (Please DO NOT put this assessment specification into Turnitin or it will match many similarities with other students' submissions.) **Alternative submission method (if applicable):** **Late submission of the assessment will result in a late penalty mark.** Penalties for late submission: Up to one week late, maximum mark of 40%. Over one week late, 0%. Only the Extenuating Circumstances Panel may approve a change to submission dates.		
Academic honesty / referencing:	Academic honesty is required. In the main body of your submission you must give credit to authors on whose research and ideas your work is based. Append to your submission a reference list that indicates the books, articles, etc. that you have used, cited or quoted in order to complete this assessment.		

Module Learning Outcomes (from module syllabus)
Critically analyse and evaluate techniques for structural and fluid problems and CAE results.

Engineering Council AHEP3 Learning Outcomes Assessed in this Module	
SM1	Knowledge and understanding of scientific principles and methodology necessary to underpin their education in their engineering discipline, to enable appreciation of its scientific and engineering context, and to support their understanding of relevant historical, current and future developments and technologies
EA1b	Understanding of engineering principles and the ability to apply them to analyse key engineering processes
EA2	Ability to identify, classify and describe the performance of systems and components through the use of analytical methods and modelling techniques
EA3b	Ability to apply quantitative and computational methods in order to solve engineering problems and to implement appropriate action
D3b	Work with information that may be incomplete or uncertain and quantify the effect of this on the design
D5	Plan and manage the design process, including cost drivers, and evaluate outcomes
P2	Knowledge of characteristics of particular materials, equipment, processes or products
P3	Ability to apply relevant practical and laboratory skills
P4	Understanding of the use of technical literature and other information sources
P6	Understanding of appropriate codes of practice and industry standards
P8	Ability to work with technical uncertainty

TASK DESCRIPTION

In class we have been discussing fluid flow around an object and through a pipe. This assignment consolidates and builds upon this. Figure 1 shows an assembly which contains a butterfly valve that is to be inserted into a pipeline that forms the outlet at the base of a 5m high storage tank that contains petroleum at atmospheric pressure.

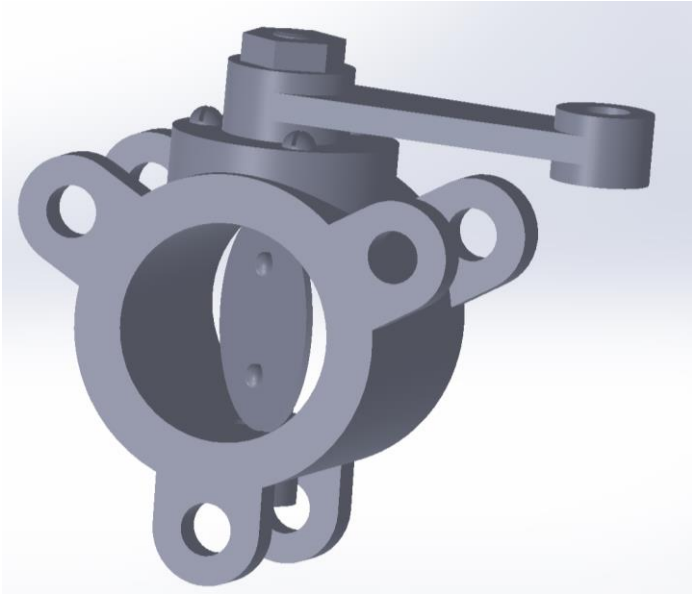

Figure 1: A butterfly valve assembly

Given the above geometry you must now consider the following tasks;

1. Discuss Reynolds number. Why is this important, how does it influence the flow around the butterfly valve and estimate what the Reynolds number is of the fluid flowing around the butterfly valve?
2. Discuss boundary flow around the butterfly valve and relate this to the separation and the turbulence around the valve, particularly the rivets that hold the valve onto the central shaft. Discuss why you think that valve has been designed like this and the cost implications of such a design.
3. This butterfly valve is to be manufactured from glass fibre reinforced plastic. Discuss the implications of this in terms of the performance of the valve. Relate this to the historical, current and future developments of such components. You should include reference to technical literature, industry standards and codes of practice.
4. Discuss what modelling techniques could be used to simulate the fluid flow though this valve. Discuss the advantages and the disadvantages of the tools highlighted.
5. During the development of this component, it is proposed that a prototype is produced and tested in a laboratory to understand the fluid flow through this valve and also to correlate it to the simulation carried out in task 4. Discuss how you think this experiment should be carried out and how the acquisition of data should be obtained and compared to the simulation.

You are required submit a report equivalent to 3000 words which discusses the above tasks.

GUIDANCE FOR STUDENTS IN THE COMPLETION OF TASKS

NOTE: The guidance offered below is linked to the five generic assessment criteria overleaf.

1. Engagement with Literature Skills

Your work must be informed and supported by scholarly material that is *relevant* to and *focused* on the task(s) set; you should make use of scholarly reviews and primary sources, where appropriate (for example, refereed research articles and/or original materials appropriate to the discipline). You should provide evidence that you have accessed a wide *range* of sources, which may be academic, governmental and industrial; these sources may include academic journal articles, textbooks, current news articles, organisational documents, and websites. You should consider the *credibility* of your sources; academic journals are normally highly credible sources while websites require careful consideration/selection and should be used sparingly. Any sources you use should be current and up-to-date, mostly published within the last five years or so, though seminal/important works in the field may be older. You must provide *evidence* of your research/own reading throughout your work, using a suitable referencing system, including in-text citations in the main body of your work and a reference list at the end of your work.

Guidance specific to this assessment:

Assessed in task 3.

2. Knowledge and Understanding Skills

At level 6, you should be able to demonstrate coherent and detailed knowledge and a systematic understanding of the subject area, at least some of which is informed by the latest research and/or advanced scholarship within the discipline. You should be aware of the uncertainty, ambiguity and limits of knowledge. Your work must demonstrate the growing extent of your knowledge and systematic understanding of concepts and underlying principles associated with the subject area. *Knowledge* relates to the facts, information and skills you have acquired through your learning. You demonstrate your *understanding* by interpreting the meaning of the facts and information (knowledge). This means that you need to select and include in your work the concepts, techniques, models, theories, etc. appropriate to the task(s) set. You should be able to explain the theories, concepts, etc. meaningfully to show your understanding. Your mark/grade will also depend upon the *extent* to which you demonstrate your knowledge and understanding; ideally each should be complete and detailed, with comprehensive coverage.

Guidance specific to this assessment:

Assessed in tasks 1 and 2.

3. Cognitive and Intellectual Skills

You should be able to: critically evaluate evidence, arguments, assumptions, abstract concepts and data some of which are at the forefront of a discipline (and that may be incomplete) to devise and sustain arguments, to make judgements and/or solve problems; describe and comment upon particular aspects of current research, or equivalent advanced scholarship, in the discipline Your work must contain evidence of logical, analytical thinking, evaluation and synthesis. For example, to examine and break information down into parts, make inferences, compile, compare and contrast information. This means not just describing what! But also justifying: Why? How? When? Who? Where? At what cost? At all times, you must provide justification for your arguments and judgements. Evidence that you have reflected upon the ideas of others within the subject area is crucial to you providing a reasoned and informed debate within your work. Furthermore, you should provide evidence that you are able to make sound judgements and convincing arguments using data and concepts. Sound, valid conclusions are necessary and must be derived from the content of your work. Where relevant, alternative solutions and recommendations may be proposed.

Guidance specific to this assessment:

Assessed in task 4.

4. Practical Skills

At level 6, you should be able to apply the methods and techniques that you have learned to review, consolidate, extend and apply your knowledge and understanding, and to initiate and carry out projects. You will deploy accurately established techniques of analysis and enquiry relevant to the discipline, and apply them in complex and unpredictable contexts, to devise and sustain arguments and/or to solve problems. You should be able to frame appropriate questions to achieve a solution - or identify a range of solutions. You should be able to demonstrate how the subject-related concepts and ideas relate to real world situations and/or a particular context. How do they work in practice? You will deploy models, methods, techniques, and/or theories, in that context or circumstances, to assess current situations, perhaps to formulate plans or solutions to solve problems, or to create artefacts, some of which may be innovative and creative. This is likely to involve, for instance, the use of real world artefacts, examples and cases, the application of a model within an organisation and/or benchmarking one theory or organisation against others based on stated criteria. You should show awareness of the limitations of concepts and theories when applied in particular contexts.

Guidance specific to this assessment:

Assessed in task 5.

5. Transferable Skills for Life and Professional Practice

Your work must provide evidence of the qualities and transferable skills necessary for graduate-level employment requiring the exercise of initiative and personal responsibility and decision-making in complex and unpredictable circumstances. This includes demonstrating: the learning ability for professional development to advance existing skills and acquire new competences of a professional nature that will enable you to assume significant responsibility within organisations; that you can initiate and complete tasks and procedures, whether individually and/or collaboratively; that you can use appropriate media to effectively communicate information, arguments and analysis in a variety of forms to specialist and non-specialist audiences; fluency of expression; clarity and effectiveness in presentation and organisation. Work should be coherent and well-structured in presentation and organisation.

Guidance specific to this assessment:

This will be assessed in the way that you present your work. Your report should be presented in a professional manner, be easy to read with each of the above tasks clearly addressed.

STUDENT FEEDBACK FORM

This section details the *extent* to which the assessment criteria are demonstrated by you, which in turn determines your mark. The marks available for each category of skill are shown. Lecturers will use the space provided to comment on the achievement of the task(s), including those areas in which you have performed well and areas that would benefit from development/improvement.

Generic Assessment Criteria	**Marks available**	**Marks awarded**
1. Engagement with Literature Skills		
	20	
2. Knowledge and Understanding Skills		
	20	
3. Cognitive and Intellectual Skills		
	20	
4. Practical Application Skills		
	20	
5. Transferable Skills for Life and Professional Practice		
	20	

Assessment Mark (Assessment marks are subject to ratification at the Exam Board. These comments and marks are to give feedback on module work and are for guidance only until they are confirmed.)	**Late Submission Penalties (tick if appropriate)**		**%**
	Up to 1 week late (40% Max)		
	Over 1 week late (0%)		

GENERIC ASSESSMENT CRITERIA

Level 6
In accordance with the Framework for Higher Education Qualifications, at the end of Level 6 students should have coherent and detailed knowledge and a systematic understanding of their subject area, at least some of which is informed by the latest research and/or advanced scholarship within the discipline. They will be able to accurately deploy established techniques of analysis and enquiry within a discipline, using their conceptual understanding to devise and sustain arguments and/or to solve problems. They should be aware of the uncertainty, ambiguity and limits of knowledge. They should be able to critically evaluate evidence, arguments, assumptions, abstract concepts and data (that may be incomplete), to make judgements, and to frame appropriate questions to achieve a solution - or identify a range of solutions. They will apply the methods and techniques that they have learned to review, consolidate, extend and apply their knowledge and understanding, and to initiate and carry out projects. They will have the ability to manage their own learning, and to make use of scholarly reviews and primary sources (for example, refereed research articles and/or original materials appropriate to the discipline). They will demonstrate the qualities and transferable skills necessary for employment requiring: the exercise of initiative and personal responsibility; decision-making in complex and unpredictable contexts; the learning ability needed to undertake appropriate further training of a professional or equivalent nature.

Level 6	FAIL	MARGINAL FAIL	SATISFACTORY (3rd / Pass)	GOOD (2.2 / Pass)	VERY GOOD (2.1 / Merit)	EXCELLENT (1st / Distinction)	EXCEPTIONAL (1st / Distinction)
Category	**0-29%**	**30-39%**	**40-49%**	**50-59%**	**60-69%**	**70-84%**	**85-100%**
Engagement with literature (including reading, referencing, academic conventions and academic honesty)	Little or no evidence of reading and/or reliance on inappropriate sources. Views and findings mostly unsupported and non-authoritative. Referencing conventions used incoherently or largely absent.	Poor engagement with essential reading. No evidence of wider reading. Reliance on inappropriate sources, and/or indiscriminate use of sources. Heavily reliant on information gained through class contact. Inconsistent and weak use of referencing.	Engagement with a limited range of mostly relevant and credible sources. Some omissions and minor errors. Referencing conventions evident though not always applied accurately or consistently.	Engagement with an appropriate range of research-informed literature, including sources retrieved independently. Some over-reliance on texts. Referencing may show minor inaccuracies or inconsistencies.	Engagement with a wide range of research-informed literature, including sources retrieved independently. Selection of relevant and credible sources. Very good use of referencing, with no/very few inaccuracies or inconsistencies.	Engagement with an extensive range of relevant and credible literature, informed by the latest research. Consistently accurate application of referencing.	Exceptional engagement with an extensive range of relevant and credible literature, informed by the latest research. High-level referencing skills consistently and professionally applied.
Knowledge and understanding (Coherent and detailed	Major gaps in knowledge and systematic understanding of the subject	Gaps in knowledge, with only superficial systematic understanding.	Limited knowledge and systematic understanding of the relevant	Knowledge is reasonably detailed, accurate with a good systematic	Knowledge is reasonably extensive coherent and detailed.	Excellent coherent and detailed knowledge and systematic	Exceptionally coherent and detailed knowledge and systematic

Level 6	FAIL	MARGINAL FAIL	SATISFACTORY (3rd / Pass)	GOOD (2.2 / Pass)	VERY GOOD (2.1 / Merit)	EXCELLENT (1st / Distinction)	EXCEPTIONAL (1st / Distinction)
Category	**0-29%**	**30-39%**	**40-49%**	**50-59%**	**60-69%**	**70-84%**	**85-100%**
knowledge and systematic understanding of the subject area, at least some of which is informed by the latest research and/or advanced scholarship within the discipline.)	matter. Substantial inaccuracies. No awareness of knowledge of the latest research and/or advanced scholarship within the discipline.	Some significant inaccuracies and/or irrelevant material. No awareness of knowledge of the latest research and/or advanced scholarship within the discipline.	concepts and principles within the subject area which to some limited extent, is informed by current research and scholarship.	understanding of the field of study and to some extent, current research and scholarship.	Exhibits very good understanding of the breadth and depth of established views, and the work is, at least in part, well-informed by current research and scholarship.	understanding of the principles and theories of current research and scholarship. Clear awareness of challenges to established views and the limitations of the knowledge base.	understanding of the principles and theories of the subject, well-informed by current research and scholarship. A critical, sophisticated and nuanced awareness of the ambiguities and limitations of knowledge.
Cognitive and intellectual skills (Conceptual and critical thinking, analysis, synthesis and evaluation of research, assumptions, abstract concepts and data (that may be incomplete); logic, argument and judgement.)	Wholly or almost wholly descriptive work. Little or no analysis, synthesis or evaluation. Failure to develop arguments, leading to illogical or invalid judgements. Unsubstantiated generalisations, made without use of any credible evidence.	Largely descriptive work, with superficial use of critical evaluation. Weak development of arguments and judgements. Information accepted uncritically, uses generalised statements made with scant evidence and unsubstantiated opinions. Ideas sometimes illogical and contradictory.	Limited attempt at critical thinking, analysis, synthesis and evaluation, tending towards description. Some evidence to support emerging arguments and judgements but these may be underdeveloped or with a little inconsistency / mis-interpretation. Asserts rather than argues a case.	Some critical thinking, analysis, synthesis and evaluation. Can analyse new and/or abstract concepts and data without guidance. An emerging awareness of different stances and ability to use evidence (that may be incomplete) to support the argument. Mostly valid arguments and logical judgements. Some tendency to assert/state opinion rather than argue on	Sound critical thinking, analysis, synthesis and evaluation demonstrating critical thinking. Ability to devise and sustain persuasive arguments, and to review the reliability, validity and significance of evidence (that may be incomplete) to make mostly appropriate and valid judgements.	Excellent critical thinking, analysis, synthesis and evaluation. Ability to investigate contradictory or incomplete information and make strong, persuasive, arguments and sophisticated judgements. Some evidence of independent thought and ability to 'see beyond the question', suggesting a grasp of the broader field and wider concepts.	Exceptional critical thinking, analysis, synthesis and evaluation based on judiciously selected evidence. Ability to investigate contradictory or incomplete information and make strong, persuasive, arguments and sophisticated, nuanced, judgements. Evidence of independent thought and ability to 'see beyond the question', suggesting an outstanding

Level 6	FAIL	MARGINAL FAIL	SATISFACTORY (3rd / Pass)	GOOD (2.2 / Pass)	VERY GOOD (2.1 / Merit)	EXCELLENT (1st / Distinction)	EXCEPTIONAL (1st / Distinction)
Category	**0-29%**	**30-39%**	**40-49%**	**50-59%**	**60-69%**	**70-84%**	**85-100%**
				the basis of reason and evidence.			grasp of the broader field and wider concepts.
Practical skills (Apply/deploy accurately established tools and techniques; initiate and carry out projects; formulate solutions to solve problems in complex and unpredictable contexts.)	Limited or no use of methods, materials, tools and/or techniques. Little or no appreciation of the context of the application. Limited understanding of the application of theory to practice or making appropriate links between the two. Very weak problem-solving skills in complex and unpredictable contexts.	Rudimentary application of methods, materials, tools and/or techniques but without consideration and competence. Flawed appreciation of the context of the application. Weak understanding of the application of theory to practice, with only occasional evidence of making appropriate links between the two. Weak problem-solving skills in complex and unpredictable contexts.	An adequate awareness and mostly appropriate application of well-established methods, materials, tools and/or techniques. Basic appreciation of the context of the application. Theoretical knowledge and understanding applied in practice, but not always making logical links between the two. Can identify problems and propose basic solutions in complex and unpredictable contexts without fully appreciating the complexity.	A good and appropriate application of standard methods, materials, tools and/or techniques. Clear appreciation of the context of the application. Mainly consistent, accurate and logical application of theory to practice, making appropriate links between the two Can identify problems and propose mostly appropriate solutions in complex and unpredictable contexts.	A very good application of a range of methods, materials, tools and/or techniques. Very good consideration of the context of the application, with perceptive insights. Can identify problems and propose appropriate solutions in complex and unpredictable contexts. Evidence of some innovation and creativity.	An advanced application of a range of methods, materials, tools and/or techniques. The context of the application is well considered, and insightful. Application and deployment extend beyond established conventions. Can identify complex problems and propose excellent solutions. Innovation and creativity evident.	Exceptional levels of application and deployment skills in unpredictable, practical contexts, drawing skilfully on the latest research within the discipline. Can identify complex problems and propose sophisticated solutions. Assimilation and development of cutting edge processes and techniques.
Transferable skills for life and professional practice (Exercise of initiative and	Communication medium is inappropriate or misapplied. Work is poorly structured, disorganised	Communication medium is poorly designed and/or not suitable for the audience. Work is poorly presented in a	Can communicate in a suitable medium but with some room for improvement.	Can communicate effectively in a suitable format, but may have minor errors.	Can communicate well, confidently and consistently in a suitable format.	Can communicate professionally confidently and consistently in a suitable format.	Can communicate with an exceptionally high level of professionalism.

Level 6	FAIL	MARGINAL FAIL	SATISFACTORY (3rd / Pass)	GOOD (2.2 / Pass)	VERY GOOD (2.1 / Merit)	EXCELLENT (1st / Distinction)	EXCEPTIONAL (1st / Distinction)
Category	**0-29%**	**30-39%**	**40-49%**	**50-59%**	**60-69%**	**70-84%**	**85-100%**
personal responsibility; professional development; initiate and complete tasks and procedures: individually and/or collaboratively; use appropriate media to communicate effectively; fluency of expression; clarity and effectiveness in presentation and organisation.)	and/or confusingly expressed. Very weak use of language and/or very inappropriate style. Little or no evidence of autonomy (or collaboration, where relevant) in the completion of tasks. Little or no evidence of the skills required in graduate employment.	disjointed manner. It is loosely, and at times incoherently, structured, with information and ideas often poorly expressed. Weak use of language and/or inappropriate style. Weak independent initiative (or collaboration, if relevant). Limited evidence of the skills required in graduate employment.	Mostly ordered presentation and structure in which relevant ideas / concepts are reasonably expressed. Work may lack coherence in places. Can work as part of a team, but with limited involvement in group activities. Demonstrates the basic skills required in graduate employment, with some areas of minor weakness.	Mostly coherent, organised work, in a suitable structure and is for the most part clearly expressed. Can work effectively independently and/or as part of a team, with clear contribution to group activities. Demonstrates the skills required in graduate employment, with some areas of strength and some of minor weakness.	Work is coherent, fluent, well-structured and organised. Can work very well autonomously and/or as part of a team, with very good contribution to group activities. Demonstrates very good graduate employment skills, with just occasional minor weakness.	Work is coherent, very fluent and is presented professionally. Can work autonomously with initiative. Where relevant can work professionally within a team, showing leadership skills as appropriate, managing conflict and meeting obligations. Demonstrates excellent graduate employment skills and an appetite for further development.	Work is exceptionally coherent, very fluent and is presented professionally. Can work exceptionally well and professionally within a team, showing advanced leadership skills. Demonstrates exceptional graduate employment skills and an appetite for further development.

THIS DOCUMENT IS ALSO AVAILABLE IN WELSH