1910593

by Evan Thomas

FILE	17591_EVAN_THOMAS_1910593_178815_997085615.PDF (3.47M)		
TIME SUBMITTED	04-FEB-2021 05:53PM (UTC+0000)	WORD COUNT	4323
SUBMISSION ID	144189615	CHARACTER COUNT	28853

Course : **HNC Electrical and Electronic Engineering**

Module : **SGEE4005**

Assignment title : **Instrumentation for Automatic Systems**

Name : **Evan Dorian Thomas**

University number : **1910593**

Date Submitted : **9/2/2021**

Word count : **2745**

An excellent report with a few improvements that could be made.

Inaccurate word count since Turnit-in see 4323 and there are few words in the appendix, word count has been exceeded.

Table of Contents

Good Structure

Table of Figures 3
Table of Tables 4
1)System investigation 5
2) Research 9
3) Environmental, Sustainable Development, Commercial Risk and Codes of Practice 12
4)Calibration of Pressure Sensor 14
5)Calibration of Temperature Sensor 16
6) Calibration of Level Sensor 18
7)Calibration of Flow Sensor 20
8)Design Adaption for Maintenance and reliability 21
9)Conclusions and recommendations 31
10)Team working 32
11) Citation list 33
12) Appendix 35

Table of Figures

Figure 1 Raw analogue inputs 5
Figure 2 General Control Loop Block Diagram (Controlguru, 2015) 5
Figure 3 FC535 Flow Control Loop 6
Figure 4 Flow sensor data (Components, 2021) 6
Figure 5 F/V converter (electronics, 2021) 6
Figure 6 Flow meter (Components, 2021) 6
Figure 7 Scaled flowrate l/pm 6
Figure 8 Signal converter 7
Figure 9 RTD PT100 7
Figure 10 Temperature Control Loop 7
Figure 11 Temperature scaling function block 7
Figure 12 LT541 level sensor 8
Figure 13 Level Control Loop 8
Figure 14 Scaled level function block. 8
Figure 15 Pressure sensor (CIM system G8) 8
Figure 16 Industry 4.0 (Luenendonk, 2019) 9
Figure 17 Link connections (Bihl-Wiedemann, 2021) 9
Figure 18 TN 2343 (IFM, 2021) 10
Figure 19 IFM SM6001 (IFM, 2021) 10
Figure 20 IFM PI2789 (IFM, 2021) 10
Figure 21 IFM IO Link connections 11
Figure 22 IO Link controller E30391 (IFM, 2021) 11
Figure 23 IO-Link Compact line module (IFM, 2021) 11
Figure 24 E30446 In line Bluetooth connection (IFM, 2021) 11
Figure 25 Measuring Instruments Regulations 2016 ((legislation.gov.uk, 2016) 12
Figure 26 ISO/IEC 17025 (CCSI, 2021) 12
Figure 27 BS7671 18th Edition (NICEIC, 2021) 13
Figure 28 Pressure sensor testing. 14
Figure 29 Temperature sensor testing. 16
Figure 30 Level sensor testing. 18
Figure 31 Volume of water holding tank. 20
Figure 32 Flow sensor and meter 20
Figure 33 TT511 Temperature instrument HMI 21
Figure 35 LT541 Level Instrument HMI 21
Figure 34 FT535 Flowrate Instrument HMI 21
Figure 36 Simulation function control 22
Figure 38 Siemens VPN (Siemens, 2021) 22
Figure 37 Siemens VPN login screen 22
Figure 39 TT511 Temperature HMI VPN testing 23
Figure 40 TT511 Temperature HMI simulation 23
Figure 41 FT535 Flowrate Instrument HMI VPN testing 24
Figure 42 FT535 Flowrate Instrument HMI simulation 24
Figure 43 LT541 Level Instrument HMI VPN testing 25
Figure 44 LT541 Level Instrument HMI simulation 25
Figure 45 Flowrate HMI testing 26
Figure 46 Temperature HMI testing 27

Figure 47 Heating element low level safety control 28
Figure 48 Level HMI testing 29
Figure 49 High level pump control 30

Table of Tables

Table 1 Pressure sensor test results 14
Table 2 Pressure sensor plotted graph. 15
Table 3 Temperature sensor results 16
Table 4 Temperature sensor plotted graph. 17
Table 5 Level sensor results 18
Table 6 Level sensor plotted graph. 19
Table 7Flow sensor table of results 20
Table 8 Flow meter plotted graph 20
Table 9 Flowrate HMI testing 26
Table 10 Temperature HMI testing 27
Table 11 Level HMI testing 29

1)System investigation

The CIM system has many control loops but this assignment will only focus on a couple of them. Figure 2 is a general control loop which is like the ones used on this system, on the diagram you have the process element which is the level or temperature in the tank or the flow in the pipe. Then you have the Measurement sensor/ Transmitter which can be split into two elements which are the sensing element (Sensors measuring flow, level and temperature) and the conditioning element which adjusts the output to a readable value e.g. 4-20mA. The next step is the controller where you can find the comparison element which compares the setpoint(SP) with the process value(PV) to produce an error which the controller then adjusts to produce a signal which is called a control variable(CV) which is used to control the final control element which is the DC supply to the pump to increase or decrease the flow, a contactor to switch the heating element on or off or a control valve to reduce a level in a tank. Figure 1 is a list of raw analogue signals which are the signals produced by the measurement sensor/transmitter fed into an analogue card on the PLC(Controller).

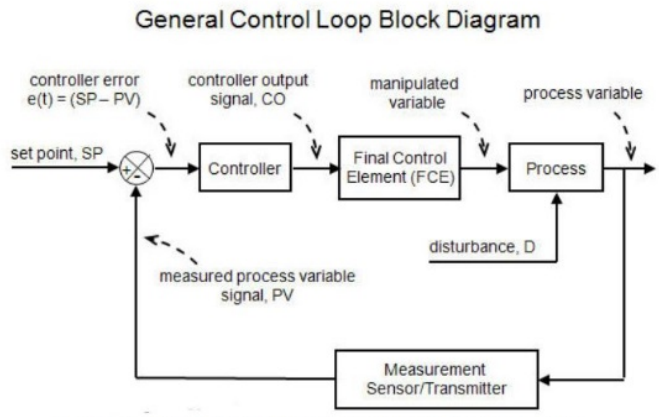

Figure 2 General Control Loop Block Diagram (Controlguru, 2015)

Analogue Inputs

	Name	Data type	Address	Retain	Acces...	Writa...	Visibl...
1	Laser Raw Analogue Sensor	Word	%MW64	☐	☑	☑	☑
2	LT541 Analogue Module Chan 0	Int	%MW128	☐	☑	☑	☑
3	TT511 Analogue Module Chan 1	Int	%MW130	☐	☑	☑	☑
4	FT531 Analogue Module Chan 2	Int	%MW132	☐	☑	☑	☑
5	FT535 Analogue Module Chan 3	Int	%MW134	☐	☑	☑	☑
6	c14 pulse	Bool	%M2054.2	☐	☑	☑	☑
7	LC541 Control Open Loop Mode	Bool	%M2054.7	☐	☑	☑	☑
8	<Add new>			☐	☑	☑	☑

Figure 1 Raw analogue inputs

Flow control loop

The flow control loop consists of a flow meter which is a turbine meter type. This works by the blades rotating passed a pickup which generates a series of pulses. To convert the signal from the flow sensor a F/V converter is used so the frequency input can be converted to a voltage output and then scaled to a l/min flow value. The technical data is-

- Flow range 0.25-6.5l/m
- Accuracy ±1.0%.
- 0-10V output
- Static accuracy 1.54 V/lm

Figure 6 Flow meter (Components, 2021)

Colour Code	Grey Body (RS stock no. 257-149)
Flow Range	0.25-6.5 l/m
Linearity at FSD Frequency	±1.0%
Approximate Full Scale At Full Scale	500Hz
Approximate Pulses per Litre	4600 pulses/litre

Figure 4 Flow sensor data (Components, 2021)

Figure 5 F/V converter (electronics, 2021)

Figure 3 FC535 Flow Control Loop

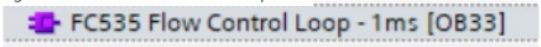

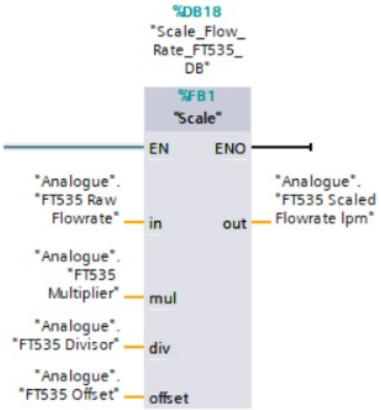

Figure 7 Scaled flowrate l/pm

Temperature control loop

The temperature control loop is controlled via the PT100 RTD mounted on the side of tank B1. The RTD is a variable resistor which changes dependant on the temperature of the substance the sensor is in. The PT100 is connected to a signal converter which converts the ohms value to a 4-20mA signal which is fed into the analogue inputs of the PLC. Both are represented as TT511 on the drawings. The features of the sensor are –

- -200˚C to 650˚C temperature range
- ±0.1˚C Accuracy
- 100Ω at 0˚C Nominal resistance
- Static sensitivity 0.02mA/˚C

Figure 8 Signal converter

Figure 9 RTD PT100

Figure 10 Temperature Control Loop

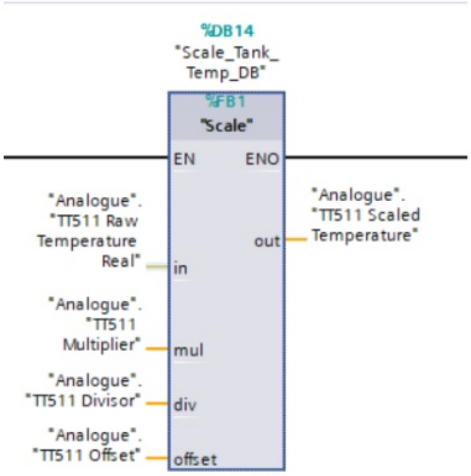

Figure 11 Temperature scaling function block

Level control loop

The level sensor is a pressure sensor which is at the bottom of tank B1. As the level of the water increases the weight applied to the pressure sensor increases resulting in a higher mA reading. The details of the level sensor are –

- 0-40mbar range
- 4-20mA output
- Static sensitivity – 0.4mA/mbar
- Accuracy ±0.5%

Figure 12 LT541 level sensor

Figure 13 Level Control Loop

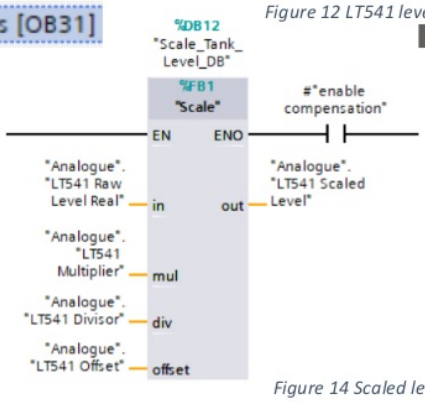

Figure 14 Scaled level function block.

Pressure transducer

The pressure sensor for the system is a GE LPM5380, its features are-

- Response time 10ms to 2 seconds
- Non-linearity error 0.25%
- 0.01% sensitivity
- Range 0–5bar
- 0-10 Volts output
- Static sensitivity 2V/bar

Figure 15 Pressure sensor (CIM system G8)

2) Research

Good formatting of paragraph through full justification and 1.5 line

Due to advances in technology the instruments on the CIM system could be upgraded in line with industry 4.0. Industry 4.0 is often referred to as the 4th industrial revolution where the machines and instruments will operate independently and be much more user friendly. They will store and share information and, in some cases will control and adjust themselves which will improve the process of any system. In short, the operators will be able to communicate with the machines instead of controlling them. (Luenendonk, 2019) Industry 4.0 is different to the historical industrial revolutions as new technologies were introduced before, Industry 4.0 focuses more on the technology we have already and makes them better in innovative ways. (Andrews, 2017)

Correctly cited

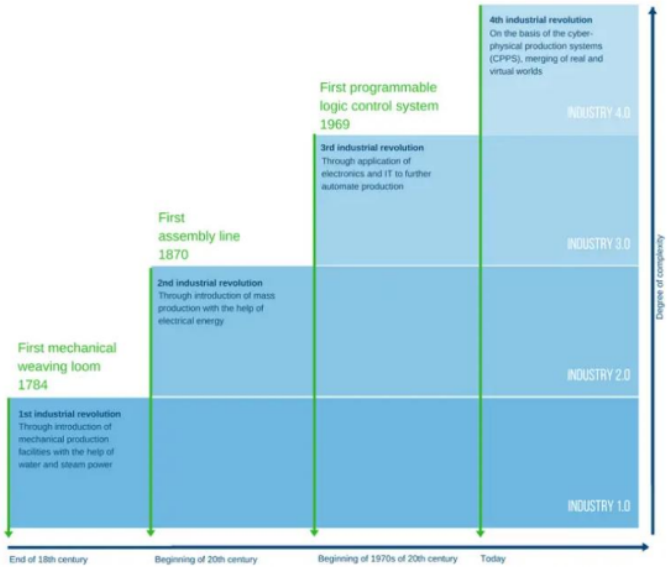

Figure 16 Industry 4.0 (Luenendonk, 2019) Correctly cited

An example of industry 4.0 is I/O link where a fieldbus-independent interface is used to offer more accurate communication. As the signals are transferred using digital signals there is no need for costly shielded cables as EMC does not affect digital signals. As the signal does not need to be converted from digital to analogue for the signal to be sent to the PLC there is less chance of errors. I/O link offers a safer way of working as the devices can be connected directly to the machine and does not need to be accessible because it can be adjusted via I/O link interface. (Bihl-Wiedemann, 2021) Correctly cited

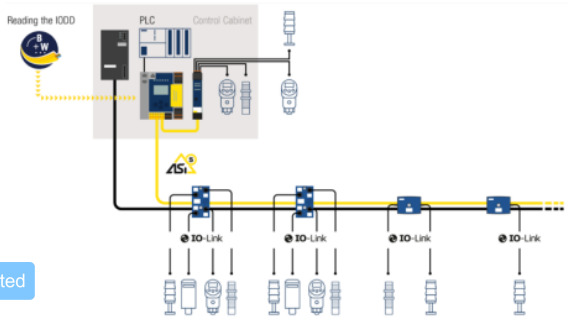

Figure 17 Link connections (Bihl-Wiedemann, 2021) Correctly cited

This type of text wrapping is distracting and not appropriate for an academic report of this nature.

Figure 18 TN 2343 (IFM, 2021)

Correctly cited

Below are the replacement sensors that could be used with this system-

Temperature IFMTN2343 sensor-

- Measuring range -50-150˚C
- 0-10V/4-20mA output
- Measures liquids and gases
- 0.1˚C resolution
- ±0.3% accuracy
- IO Link compatible

Flow IFM SM6001 sensor-

- Range 0.03-6.6gpm
- 0-10V/4-20mA output
- Measures conductive liquids.
- Resolution 0.01gpm
- ±0.8% accuracy
- IO Link compatible

Figure 19 IFM SM6001 (IFM, 2021) Correctly cited

Figure 20 IFM PI2789 (IFM, 2021)

Level IFMPI2789 sensor-

- -5-100mbar
- 0-10V/4-20mA output
- Measures liquids and gases
- Resolution 0.1mbar
- ±0.5% accuracy
- IO Link compatible

Correctly cited

The sensors selected are from the IFM range, this is because an IO Link system can be used which connects all the sensors together where they can be controlled via one master control as shown in figure 21. The master controller can work with or without a PLC and sensors can be adjusted from one central point. IFM also have a Bluetooth connector which allows you to download an app and communicate, set up, calibrate and download data from the sensors.

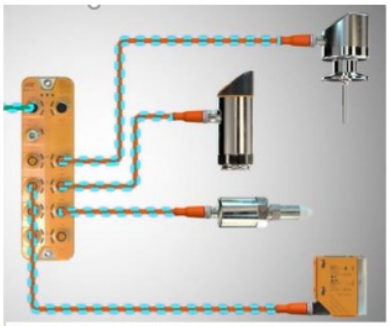

Figure 21 IFM IO Link connections

Figure 24 E30446 In line Bluetooth connection (IFM, 2021)

Figure 22 IO Link controller E30391 (IFM, 2021)

Figure 23 IO-Link Compact line module (IFM, 2021)

3) Environmental, Sustainable Development, Commercial Risk and Codes of Practice

There is no avoiding that the CIM system will have an environmental effect as it uses electricity to work but the power usage of the system can be higher or lower dependant on the condition of the sensors. For example, if a temperature sensor which controls a heating element was actual reading a lower temperature then the heating element will be running longer that was needed and possibly reducing the life span of the element. Figure 25 is The Measuring Instruments Regulation 2016 which states that every manufacturer must have designed the product up to a standard where a CE and M mark are awarded to ensure the product reaches the safety requirements. Also, suitable technical documentation must be available in relation to a test instrument and relevant assessments must have been carried out. (legislation.gov.uk, 2016) Correctly cited

STATUTORY INSTRUMENTS

2016 No. 1153

WEIGHTS AND MEASURES

The Measuring Instruments Regulations 2016

Made	*29th November 2016*
Laid before Parliament	*6th December 2016*
Coming into force	*28th December 2016*

The Secretary of State is a Minister designated(**1**) for the purposes of section 2(2) of the European Communities Act 1972(**2**) in relation to, and for purposes ancillary to, the regulation of specifications, construction, placing on the market and use of articles, instruments, containers or other equipment intended for weighing, measuring or testing.

These Regulations make provision for a purpose mentioned in section 2(2) of the European Communities Act 1972 and it appears to the Secretary of State that it is expedient for certain references to provisions of EU instruments to be construed as references to those provisions as amended from time to time.

The Secretary of State makes the following Regulations in exercise of the powers conferred by section 2(2) of, and paragraph 1A(**3**) of Schedule 2 to that Act and, in relation to Part 6 of the Regulations (and any other provisions of these Regulations to the extent that they apply to, or give effect to, Part 6), in exercise of powers conferred by sections 15(1) and 86(1) of the Weights and Measures Act 1985(**4**).

Figure 25 Measuring Instruments Regulations 2016 ((legislation.gov.uk, 2016)

It is not appropriate nor necessary to included blocks of text like this, extract the information and cite your source instead.

There are many risks associated with not calibrating measuring instruments such as compliance and safety issues. To ensure that companies are compliant they can apply for an ISO/IEC 17025 accreditation where they are audited, and checks are done to see if employees are competent in doing calibrations and if they have the appropriate training and qualifications. All the equipment they use must be on an Equipment Master list where information such as details and calibration status of equipment is kept, and a preventative maintenance plan is available. Also, a calibration plan is needed where the interval between calibrations is monitored and instruments are recalibrated before a certain date. (Awareness, 2021) Correctly cited

Figure 26 ISO/IEC 17025 (CCSI, 2021)

If this system were to be built again consideration should be taken into choosing efficient equipment, the IET have added a new standard to the BS7671 18th Edition which is the IEC60364-8-1, Low Voltage electrical installations Part 8-1 Energy Efficiency. The new part of the regulations gives guidance on types of transformers, cables and equipment that should be used to improve the systems efficiency. There is a new code system where a code EM0 indicates that there has been no consideration into the efficiency of the installation and the code EM4 will show that the system was designed to its maximum energy efficiency. (IET, 2015)

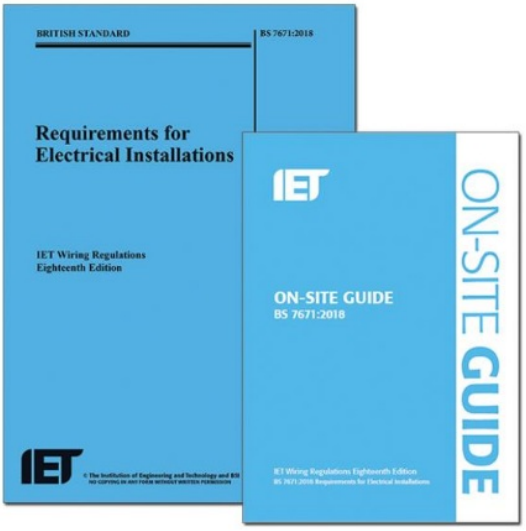

Figure 27 BS7671 18th Edition (NICEIC, 2021)

It is unnecessary to provide picture like this

4)Calibration of Pressure Sensor

The pressure sensor was tested and calibrated by measuring the 0-10V output at different pressures from 0 to 5bar which covers the range of the pressure sensor. Table 1 is the measured and calculated values collected from the test.

Figure 28 Pressure sensor testing.

Bar	V Increasing	V Decrease	Linear	Hysterisis
0	-0.01	-0.02	0.01	0.01
0.5	1.03	1.01	1.01	0.02
1	2.01	2	2.02	0.01
1.5	2.99	2.98	3.02	0.01
2	3.97	3.97	4.02	0
2.5	4.99	4.97	5.03	0.02
3	5.97	5.97	6.03	0
3.5	6.98	6.98	7.03	0
4	7.99	7.97	8.03	0.02
4.5	9	8.96	9.04	0.04
5	10.02	10.02	10.04	0

Table 1 Pressure sensor test results

two columns are missing for non-linearity error

The following equation was used to work out the linear result-

y=mx+c

$$10.02 = \frac{10.03}{5}\ x\ 5 + C$$

C=0.01

$$y = \frac{10.03}{5}\ x\ 5 + 0.01 = 10.04$$

This equation was used again to work out the linear values of the pressure from 0-5bar as shown on table 1. Table 2 is the graph plotted from this test and as you can see the results are linear.

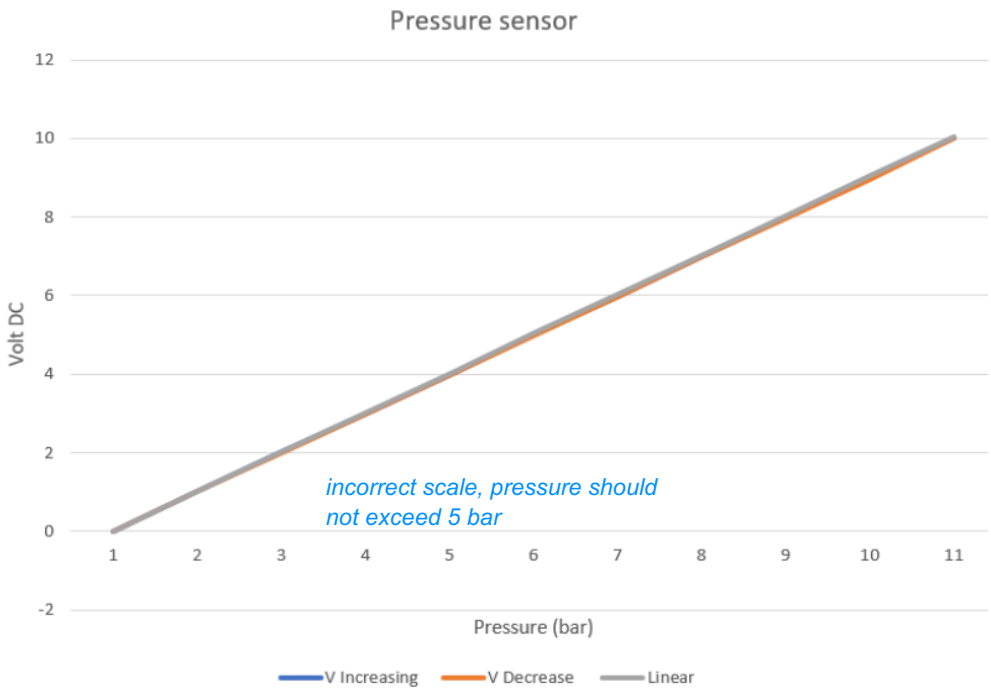

Table 2 Pressure sensor plotted graph.

5)Calibration of Temperature Sensor

When testing the temperature sensor the mA reading was at 3.8mA when the tank temperature was 0˚C and 20.3mA when at 100˚C. The zero and span adjustment were used to adjust the mA values and the test was carried out again.

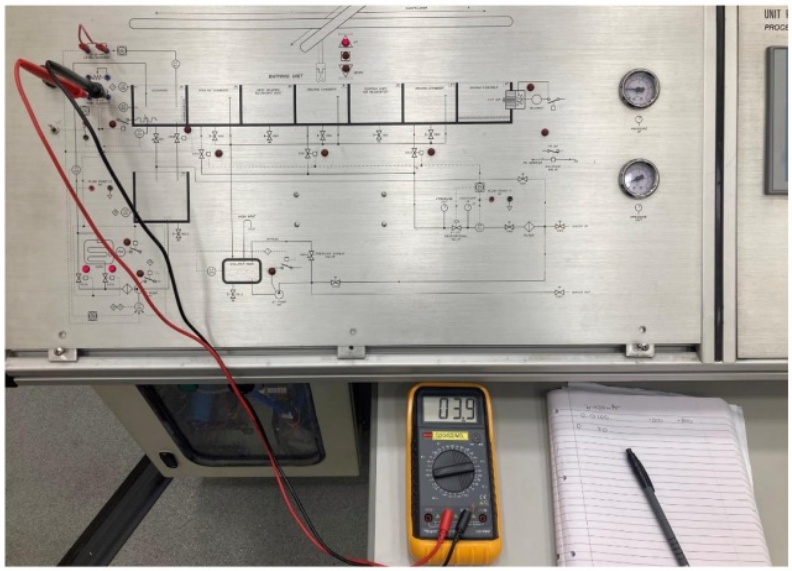

Figure 29 Temperature sensor testing.

Tempature	mA Increasing	mA Decreasing	Expected	Hysterisis
0	4	4	4	0
10	5.6	5.6	5.6	0
20	7.2	7.2	7.2	0
30	8.8	8.8	8.8	0
40	10.4	10.4	10.4	0
50	12	12	12	0
60	13.6	13.6	13.6	0
70	15.2	15.2	15.2	0
80	16.8	16.8	16.8	0
90	18.4	18.4	18.4	0
100	20	20	20	0

Table 3 Temperature sensor results

The following equation was used to work out the linear result-

y=mx+c

$$20 = \frac{16}{100}\ x\ 100 + C$$

C=4

$$y = \frac{16}{100}\ x\ 30 + 4 = 8.8$$

The equation above was used to work out the linear value for all the testing values. As you can see the results were linear and the calculated values were the same as the actual values showing that the sensor had good accuracy. Table 4 is the graph plotted from this test.

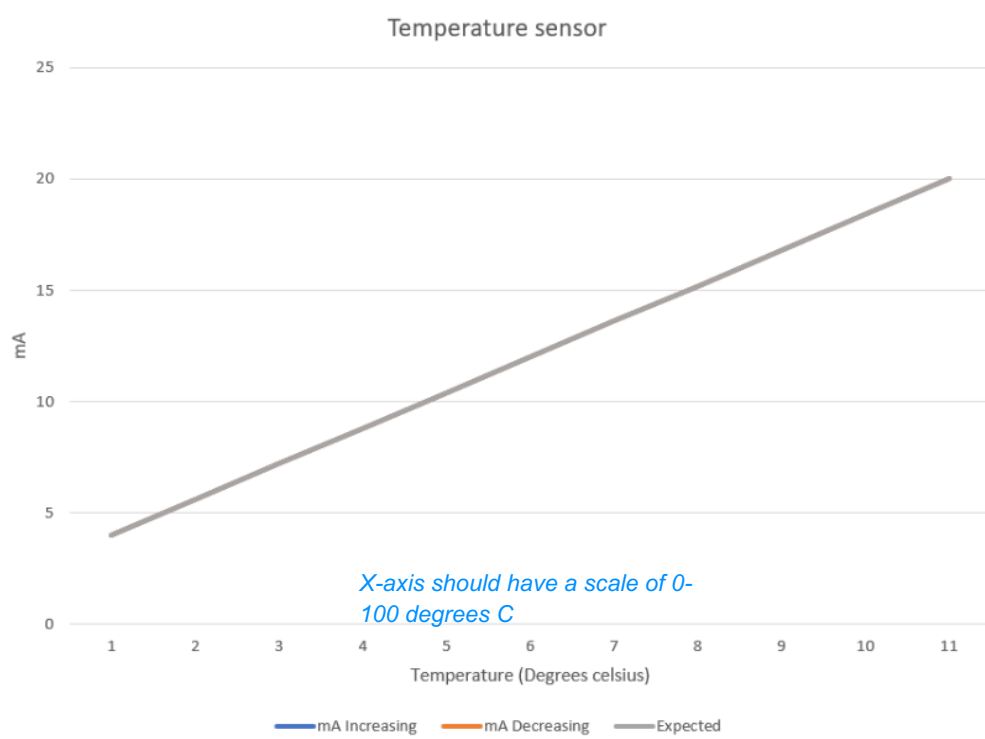

Table 4 Temperature sensor plotted graph.

6) Calibration of Level Sensor

The level sensor was tested by increasing the level of the tank to a certain points and then taking mA readings at these intervals. Because the measuring sight glass starts from 7cm and ends at 23cm the span was 16cm.

Figure 30 Level sensor testing.

Level (cm)	mA increasing	mA Decreasing	Linear	Hysterisis
7	6.1	6.1	6.10	0
8	6.6	6.5	6.51	0.1
9	6.9	6.9	6.92	0
10	7.4	7.3	7.32	0.1
11	7.7	7.7	7.73	0
12	8.2	8.1	8.14	0.1
13	8.6	8.5	8.54	0.1
14	9	8.9	8.95	0.1
15	9.4	9.3	9.35	0.1
16	9.8	9.7	9.76	0.1
17	10.2	10.1	10.17	0.1
18	10.6	10.5	10.57	0.1
19	11	10.9	10.98	0.1
20	11.4	11.3	11.39	0.1
21	11.8	11.6	11.79	0.2
22	12.2	12.1	12.20	0.1
23	12.6	12.4	12.60	0.2

Table 5 Level sensor results

The following equation was used to work out the linear result-

y=mx+c

$$12.6 = \frac{6.5}{16}\ x\ 23 + C$$

C=3.26

$$y = \frac{6.5}{16}\ x\ 15 + 3.26 = 9.35$$

Table 6 is the graph plotted from this test. As you can see the results are linear. There is a slight difference when the mA decreasing was measured around the 21-23cm area.

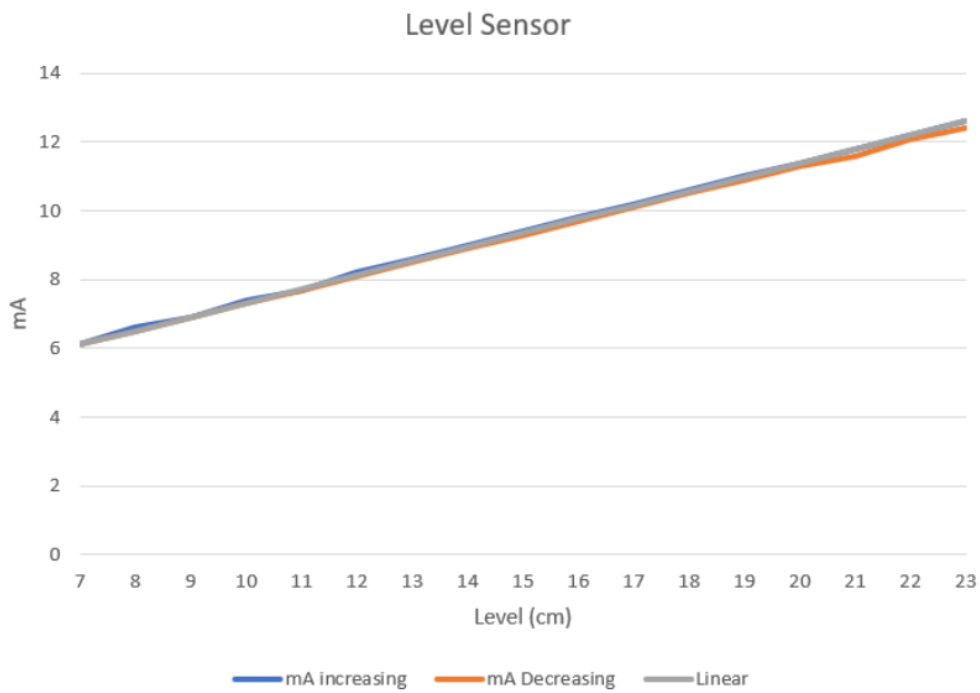

Table 6 Level sensor plotted graph.

7)Calibration of Flow Sensor

Figure 31 are the dimensions of the tank which supplies the water to the pump. The flow meter was tested by setting the pump to a desired litres/minute value and the time taken for the tank to empty was recorded and the actual flow was calculated.

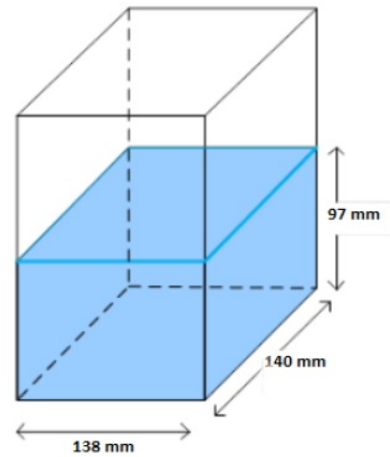

Figure 31 Volume of water holding tank.

$0.097 \times 0.14 \times 0.138 = 0.00187 m^3$

Tank volume – 1.87 Litres

Time (min)	Reading l/min	Calc l/min
4.2	0.5	0.45
2.28	1	0.82
1.45	1.5	1.29
1.18	2	1.69

Table 7Flow sensor table of results

The calculated l/min was done by using the following equation-

$$\frac{\text{Volume of tank}}{\text{Time for tank to empty}} = \text{Calculated flow}$$

Table 8 shows that the results are nonlinear and there is a significant difference between the measured value and the calculated value. This could be down to many issues such as human error when measuring and timing, also during the calculations where figures were rounded.

Figure 32 Flow sensor and meter

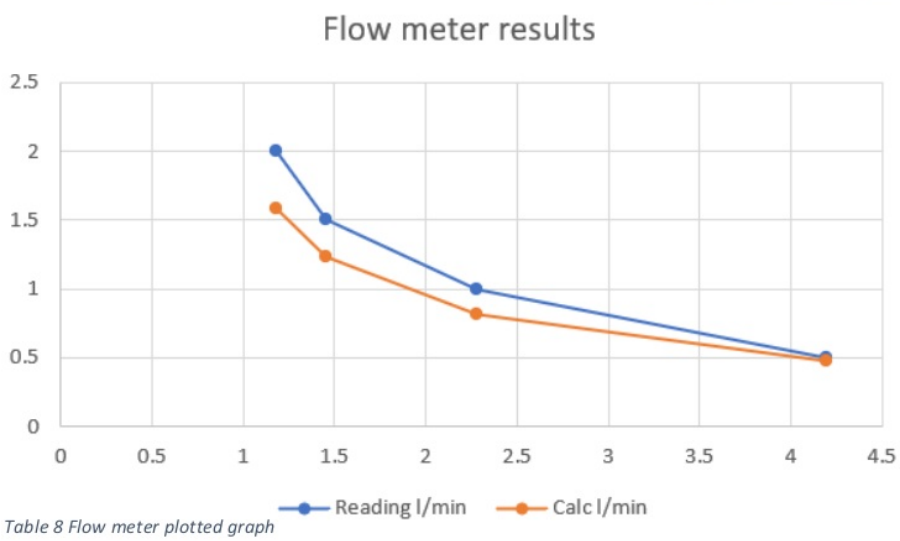

Table 8 Flow meter plotted graph

8)Design Adaption for Maintenance and reliability

The HMI screens were adapted on the programme to help with testing and calibrating. With the HMI screens you have the ability to control the system and adjust the the displayed value.

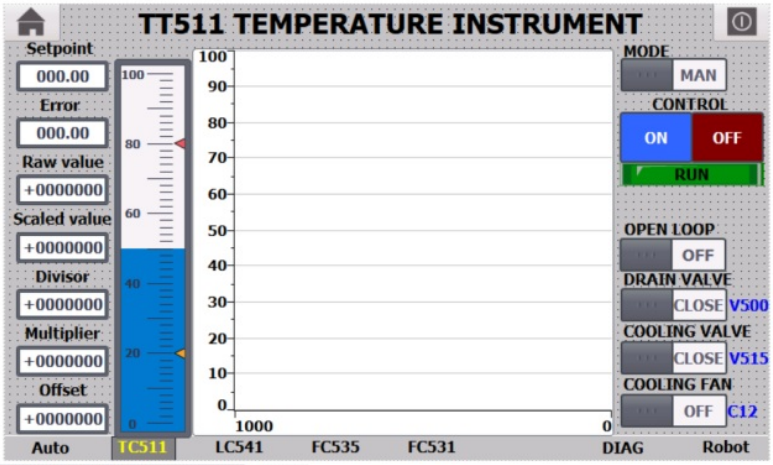

Figure 33 TT511 Temperature instrument HMI

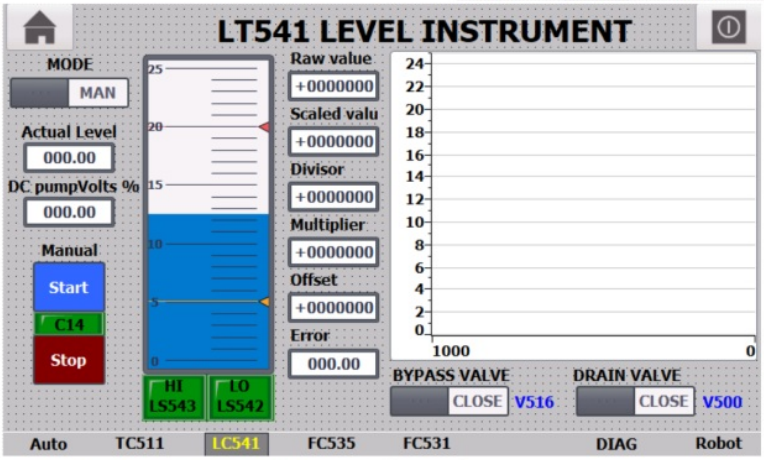

Figure 34 LT541 Level Instrument HMI

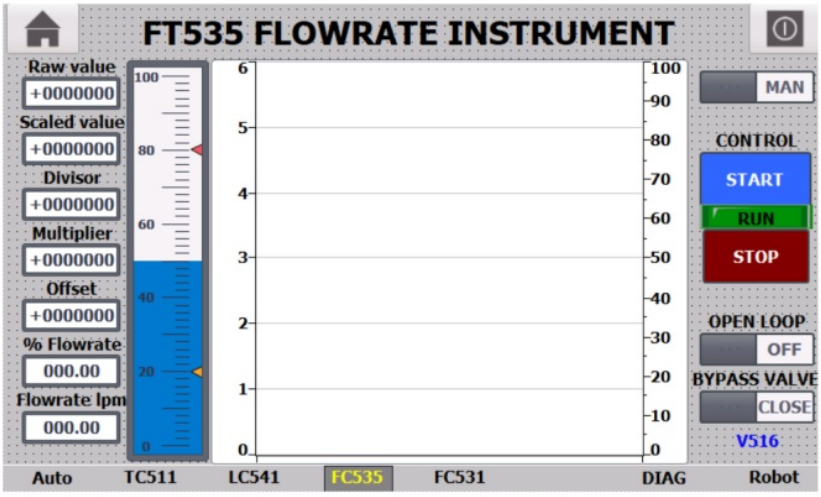

Figure 35 FT535 Flowrate Instrument HMI

Write in the third person

To simulate our system the %M2000.0 'Simulate ON' bit needed to be toggled from 0 to 1 which allowed the programmer to test their HMI screens at home.

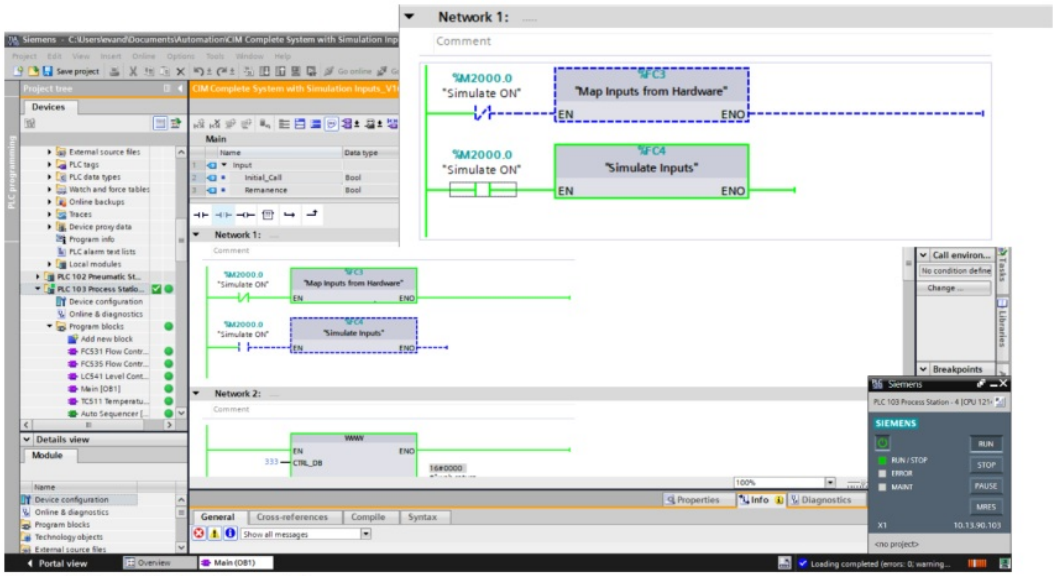

Figure 36 Simulation function control

To test the system a VPN (Virtual private network) was used which gave the user the ability to connect with the PLC from a different location. Using a VPN is a safe way of doing this because your internet traffic goes through an encrypted tunnel where nobody can see what information is being transferred so keeping your system safe. By using a webcam setup by the lecturer in the classroom tests were able to be carried out and monitored remotely. (Expressvpn, 2021)

Write in the third person

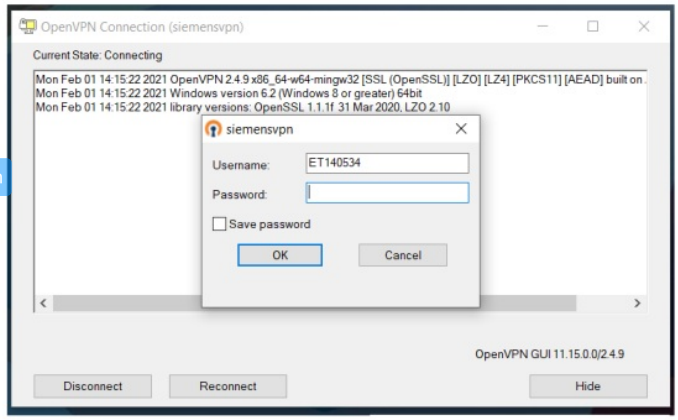

Figure 38 Siemens VPN login screen

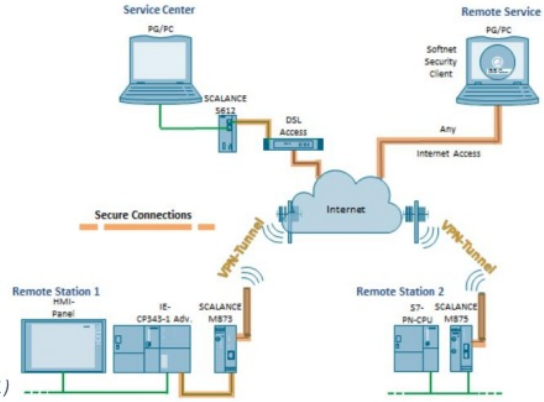

Figure 37 Siemens VPN (Siemens, 2021)

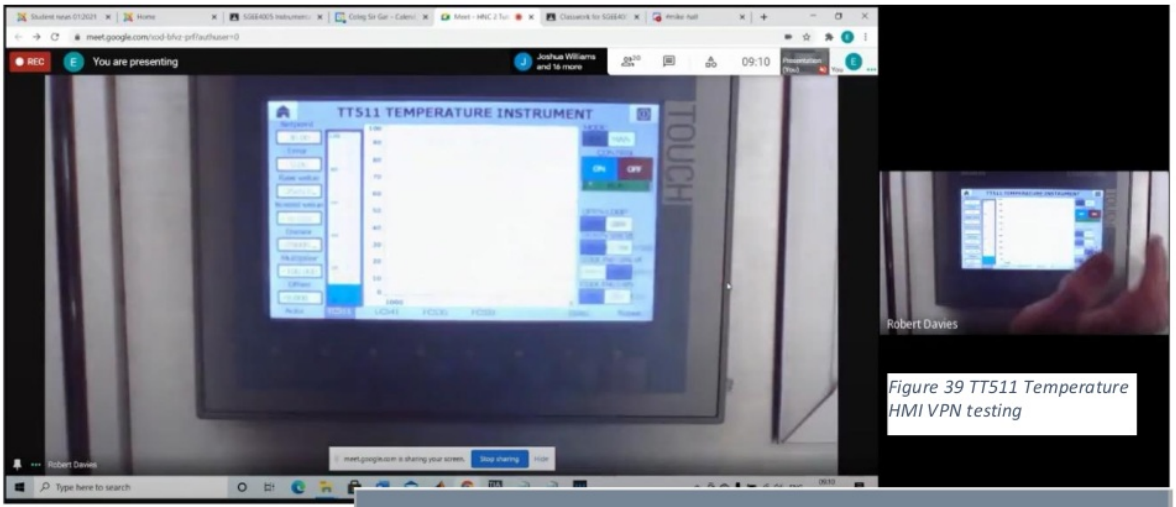

Figure 39 TT511 Temperature HMI VPN testing

All the new HMI screens were simulated and downloaded to the PLC. Tests were carried out to prove that the screens worked. The simulation was a success on all three.

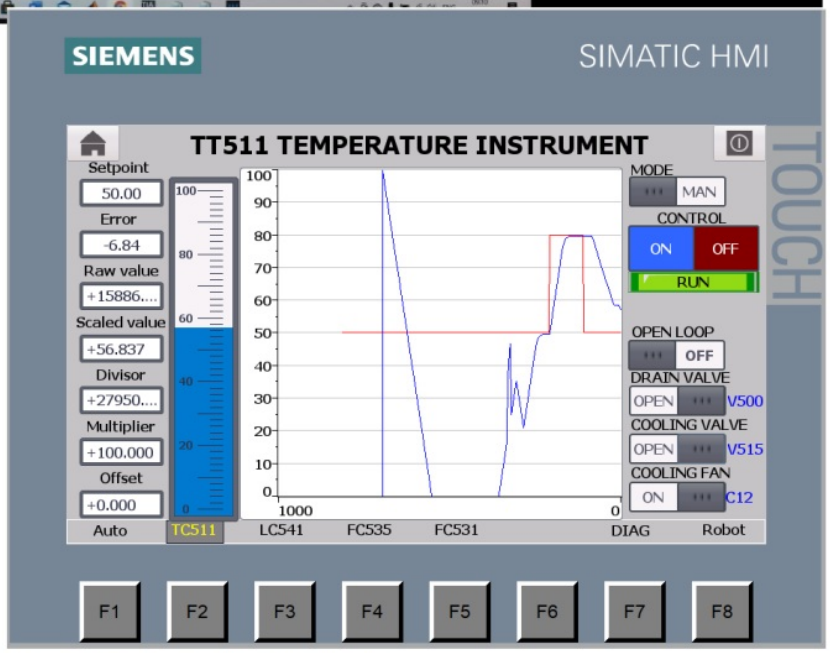

Figure 40 TT511 Temperature HMI simulation

Most of these images should be in the appendix

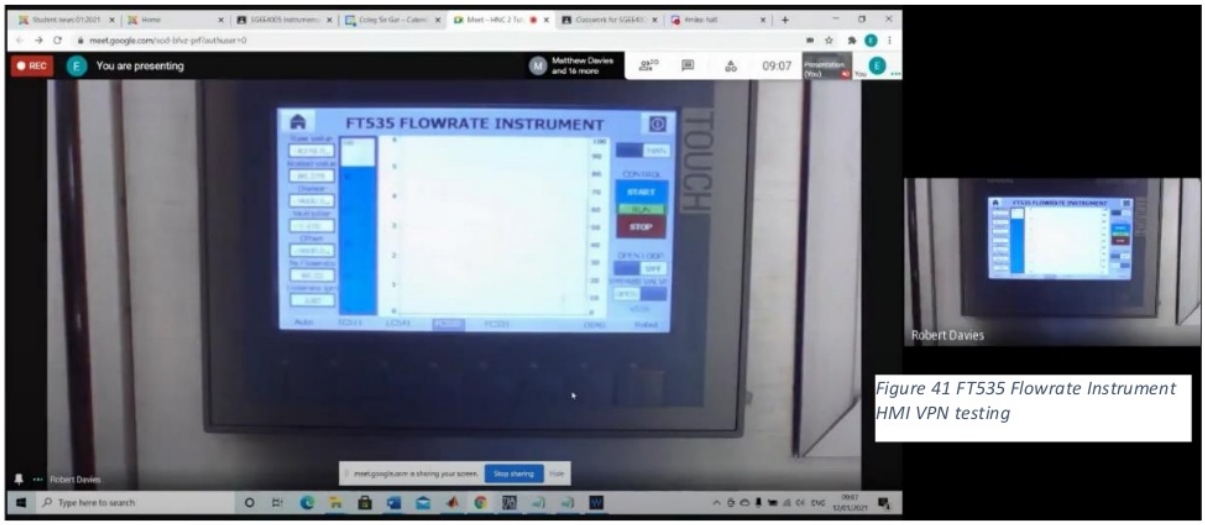

Figure 41 FT535 Flowrate Instrument HMI VPN testing

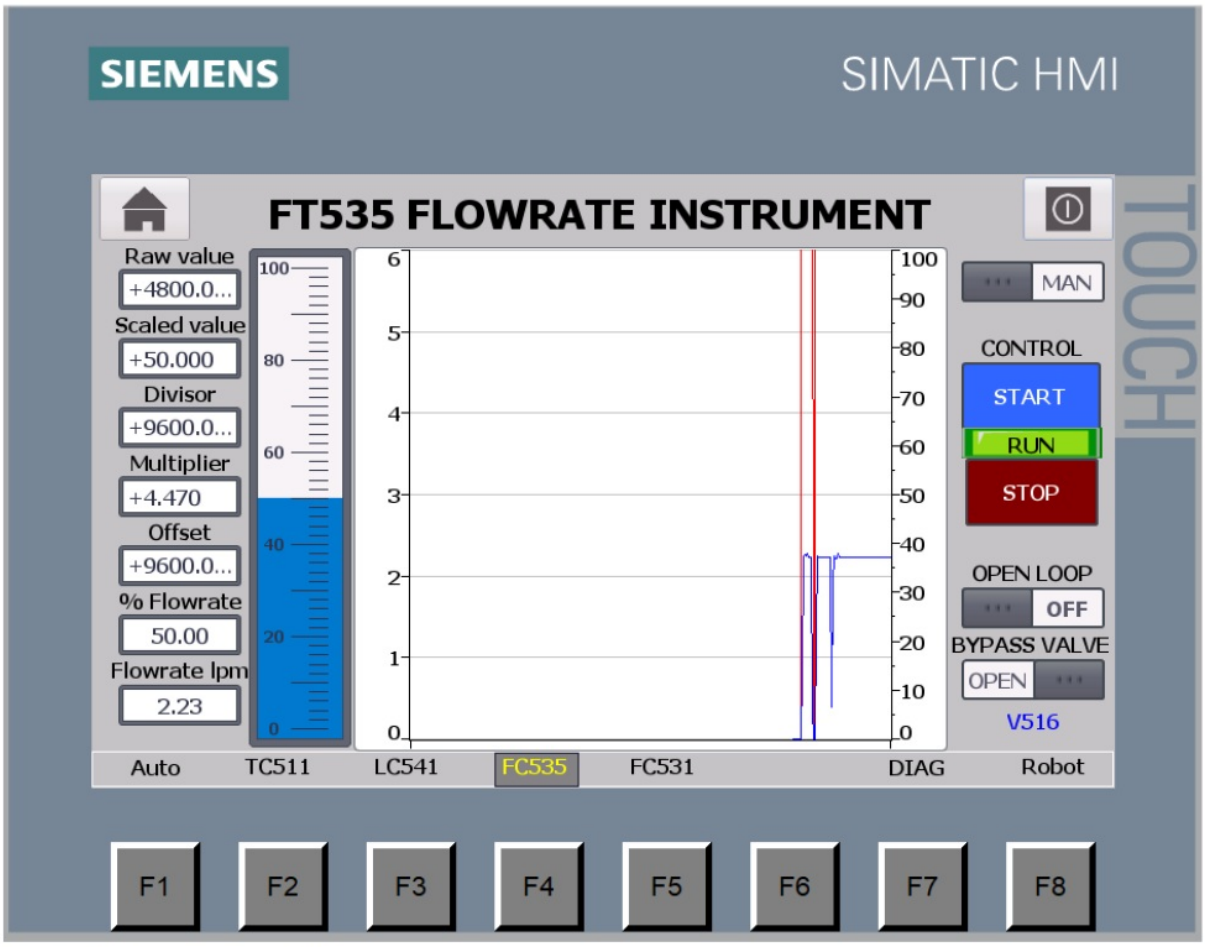

Figure 42 FT535 Flowrate Instrument HMI simulation

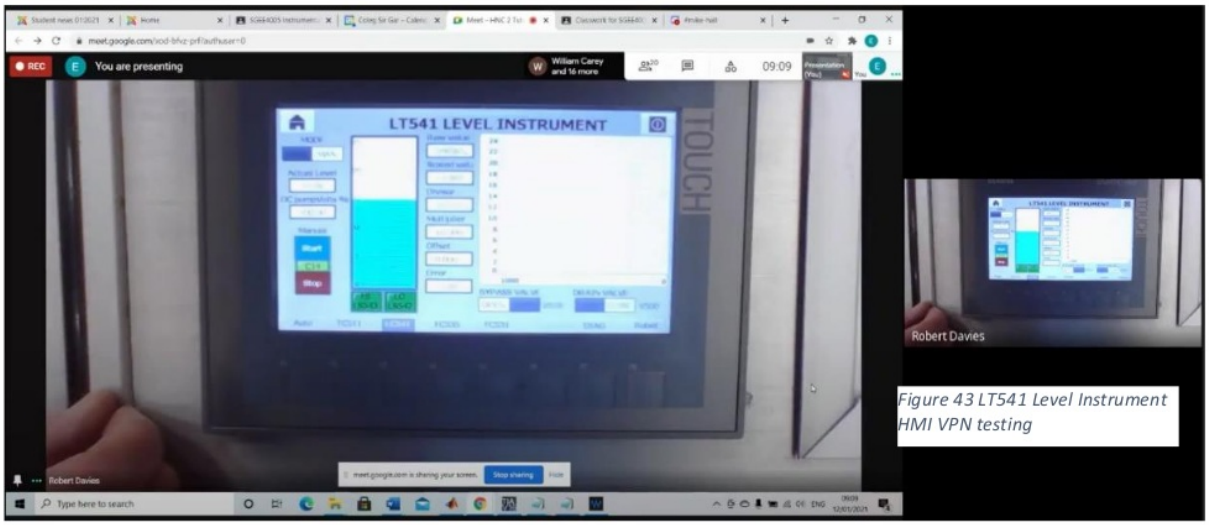

Figure 43 LT541 Level Instrument HMI VPN testing

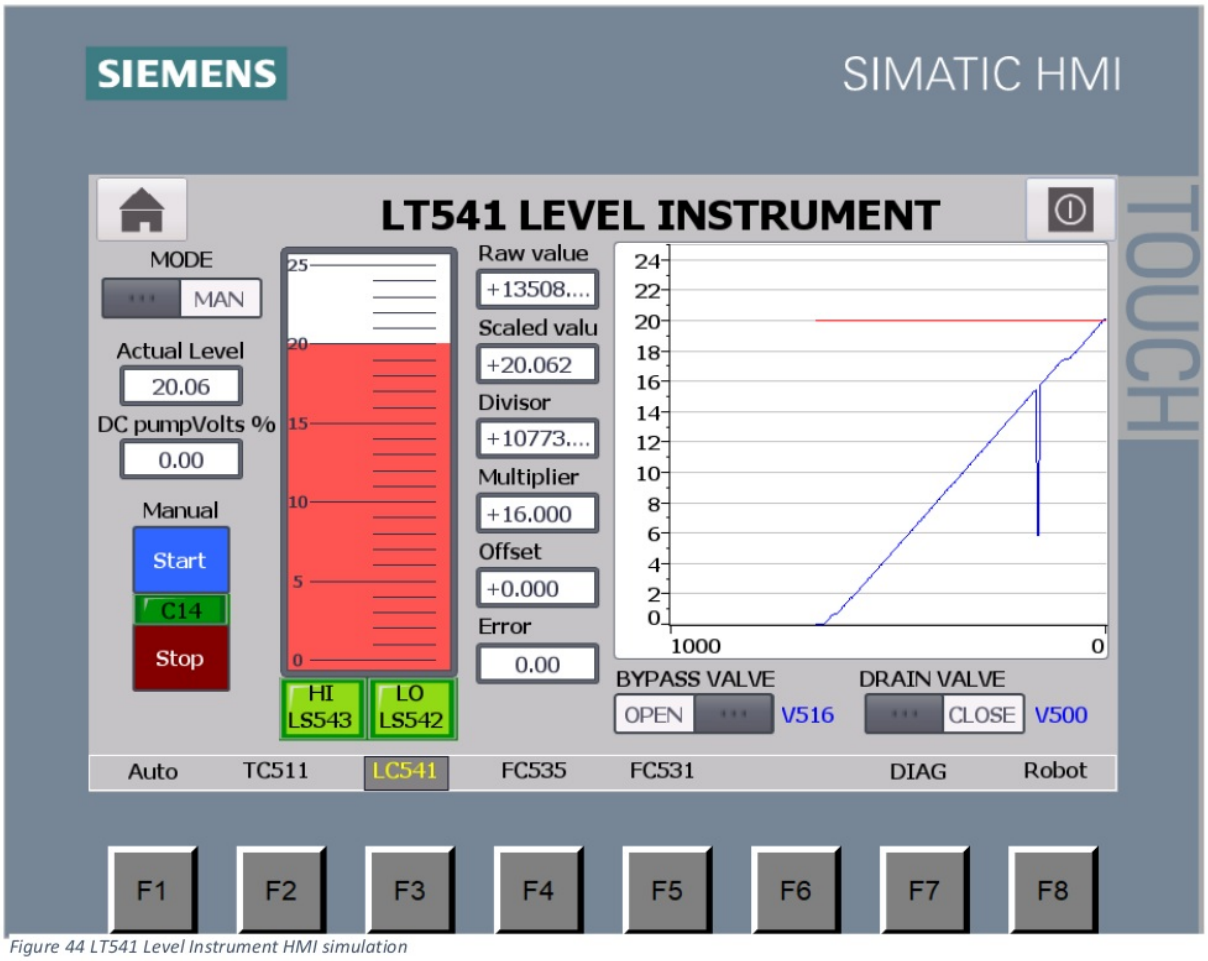

Figure 44 LT541 Level Instrument HMI simulation

Flowrate testing

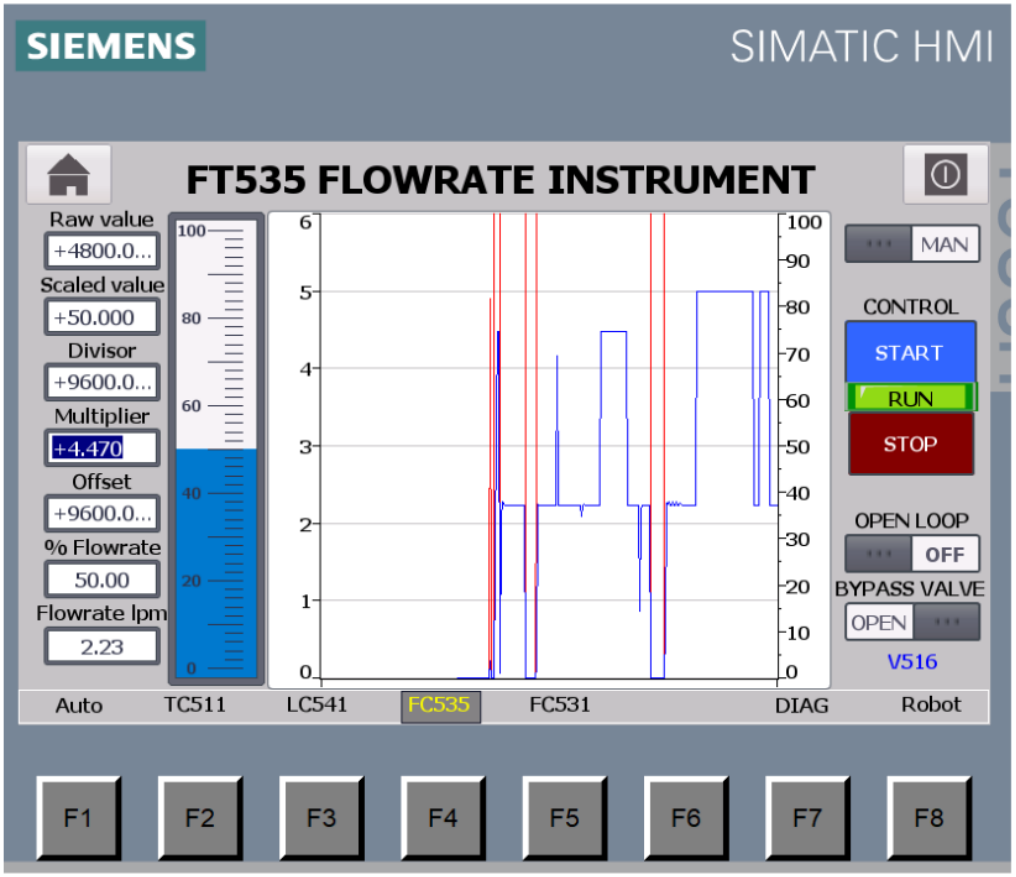

Figure 45 Flowrate HMI testing

Test	Expected result	Actual result
Press start button	Shouldn't start (bypass valve is closed)	Didn't start
Press button and open bypass valve	Flow starts	Flow started
Divisor 9600-4800	Flow value should double	Flow value doubled
Multiplier 4.470–8.940	Flow rate should double	Flow rate doubled
Offset 9600-4800	Value should reduce	Flow rate value reduced
Let tank reach high level	Pump should stop	Pump stopped
Watch flowrate during the testing	Flow rate value should change during testing	Flowrate value changes with testing

Table 9 Flowrate HMI testing

The same tests were carried out on the actual CIM system where the outcomes were as expected.

Temperature testing

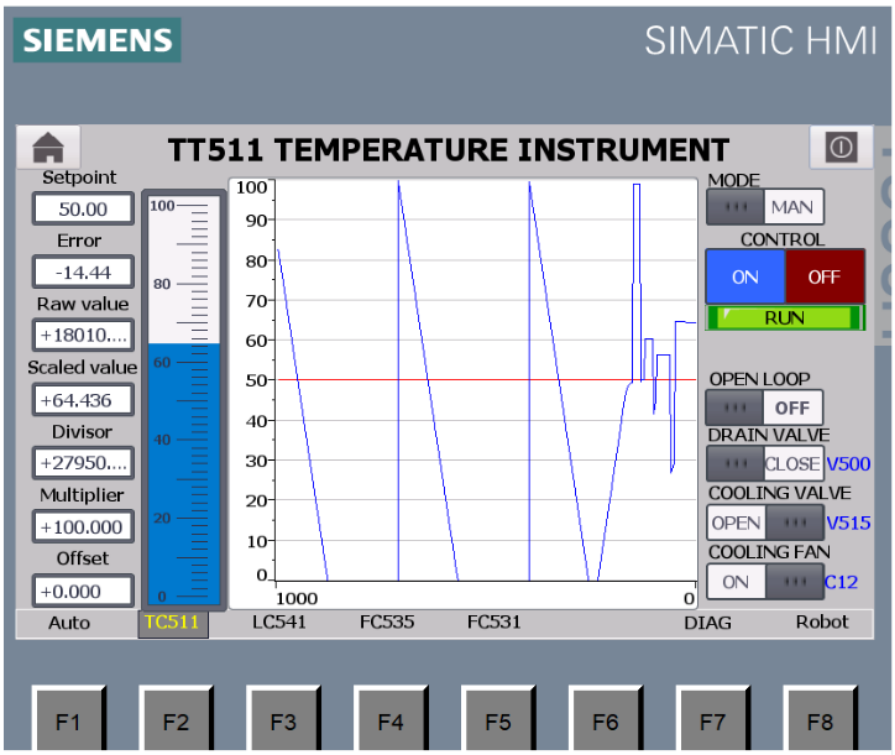

Figure 46 Temperature HMI testing

Test	Expected result	Actual result
Start system	System will heat up if the tank is over the LO limit	Would not switch on until tank had reached LO limit (over 10) (See figure 47)
Setpoint changed 50-80	The system should heat up to 80 and maintain 80	System heated up to 80 and maintained that 80
Turn on cooling fan	No affect due to cooling valve closed	Result stayed the same
Turn on cooling fan and open cooling valve	Temperature should drop	Temperature dropped
Change divisor 27950-60000	Temperature value halved	Temperature value halved
Change Multiplier (100–200)	Temperature doubles	Temperature doubled
Change offset to +10	Temperature reading should increase by 10	Temperature reading increased by 10
Change offset to -10	Temperature reading should decrease by 10	Temperature reading decreased by 10

Table 10 Temperature HMI testing

The same tests were carried out on the actual CIM system where the outcomes were again as expected apart from the LO(LS542) sensor not working which prevent the heater to switch on. This problem was fixed, and the test repeated to prove that it was working.

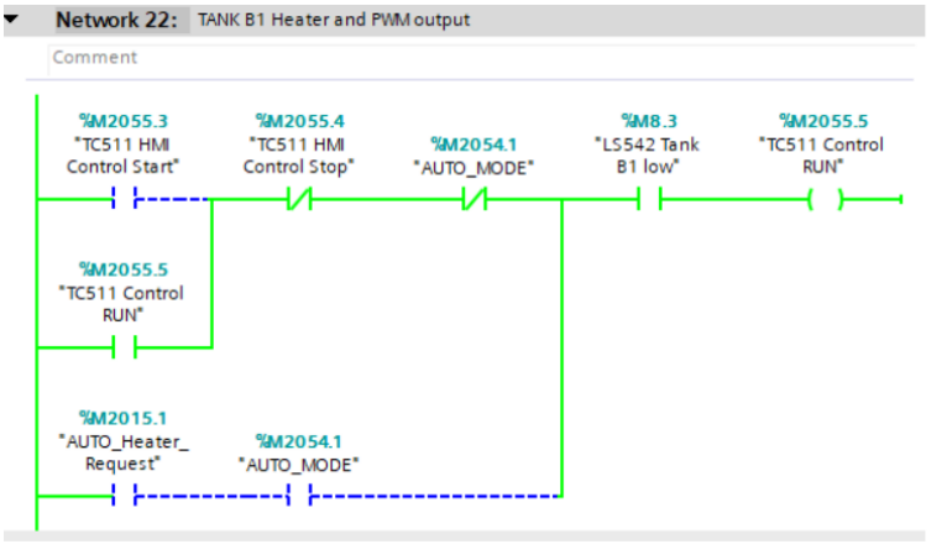

Figure 47 Heating element low level safety control

Level testing

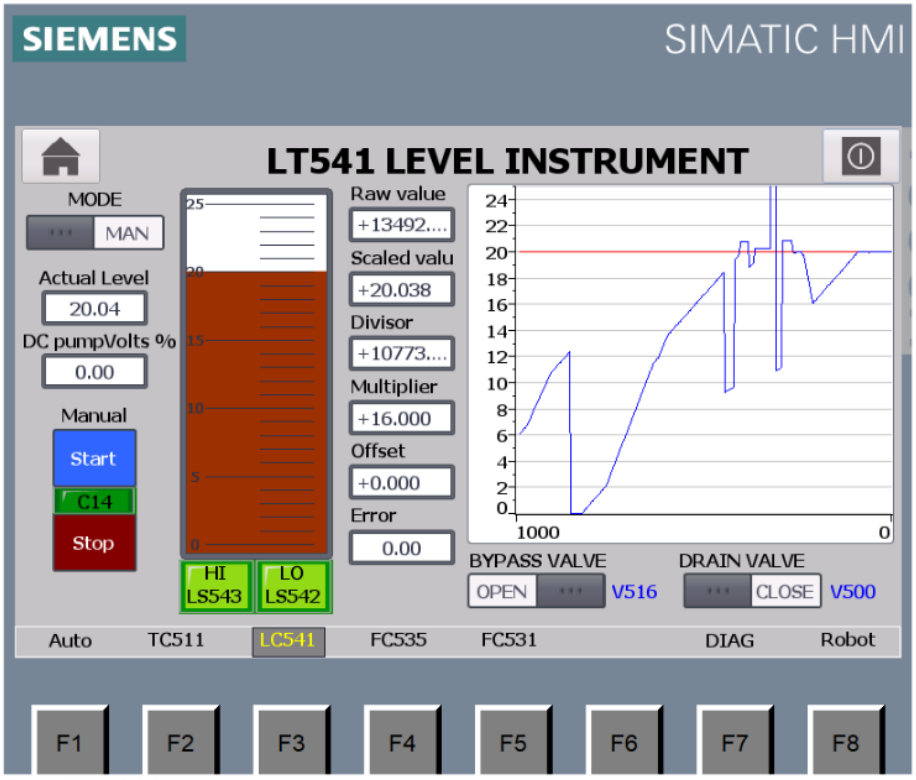

Figure 48 Level HMI testing

Test	Expected result	Actual result
Started pump	Pump starts and tank level increases	Pump started and tank level increased
Let tank fill to 10cm	LO(LS542) should light up	LO(LS542) lighted up
Let tank fill to 20cm	HI(LS543) should light up and pump should stop	HI(LS543) switched on and pump stopped (See figure 49)
Open drain valve	Tank level should drop and pump should maintain the level	Tank level dropped and pump maintained the level
Open drain valve and switch off pump	Tank level should drop	Tank level dropped
Increase divisor 10773-20000	Tank value should reduce by about half	Tank level reduced by about half
Multiplier 16 - 8	Tank level should be halved	Tank level was halved
Offset increased from 0–(-1)	Tank level should reduce by 1	Tank level reduced by 1
Offset increased from 0-1	Tank level should increase by 1	Tank level increased by 1

Table 11 Level HMI testing

The same tests were carried out on the CIM system where the outcomes were again as expected apart from the LO(LS542) sensor not working as mentioned earlier.

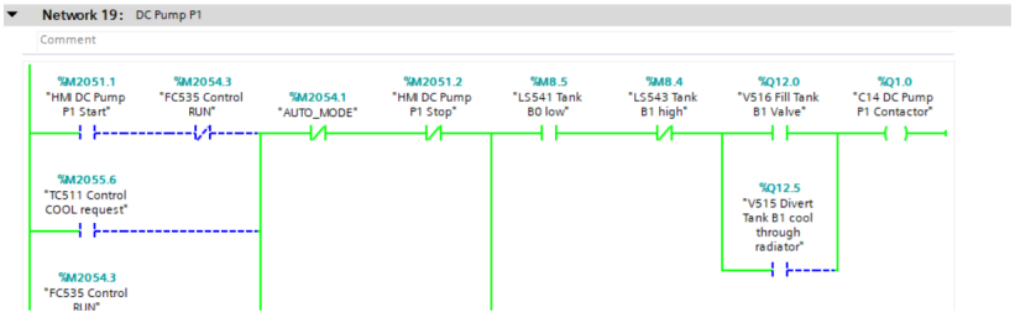

Figure 49 High level pump control

9)Conclusions and recommendations

The project was a success as all the sensors had been tested and new HMI screens were created so that future adjustment can be made easily. The research covered replacement sensors where the IFM brand was used throughout, this was because all the systems can be connected to one master controller and by standardising the instruments on site makes it easier for any operator or engineer to work on the system as they would be familiar in operating them.

If this project were repeated it would be interesting to investigate different types of sensors to see how they perform. Using a differential pressure flow sensor would work as this type of sensor works well with low flow systems. Further investigation work could be done into fine tuning the system because during the testing of the level sensor the mA only reaches 12.6mA which shows that the sensor can read a higher level. To work out the maximum water level this sensor can measure this equation was used where we first worked out the constant by using the readings we had and then having y=20mA.

y=mx+c

$$12.6 = \frac{6.5}{16}\ x\ 23 + C$$

C=3.26

$$20 = \frac{6.5}{16} x + 3.26$$

x=45.97cm

You can see this sensor is oversized and by having a level sensor closer to the range needed could result in better accuracy and resolution.

During the assignment, the testing of the sensors was done in college but unfortunately the HMI modifications had to be done remotely due to Covid-19. This problem was overcome by using Google meets and using the Siemens VPN to download the modified HMI screens. It would be good to investigate how to set up a VPN system which allows you to download PLC programmes from a remote location as this could be useful when working on a site which has lost its PLC programme where the programme needs to be reloaded. Simulating the HMI system worked well as the system could be tested before downloading. This was especially useful during testing when the level instrument on the CIM system (LO(LS542)) was faulty and if the system was not simulated before we might have thought it was an issue with the uploaded programme.

10)Team working

The calibration stage of the task the team was Dorian Thomas, Kieran Gower, and Joseph Baugh. There were three main tasks to do during all four of the calibrations and they were measuring process values, changing levels (temperature, flow, level and pressure) and recording results, the team rotated roles so everyone had an equal part. The teams were split again for the HMI designing where the second team was Dorian Thomas, Kieran Gower, Joshua Rees, and Oliver Morgan. During this part of the assignment the Covid-19 situation had gotten worse, so the tasks were carried out using Google Meets. The team met online and as Dorian had the fastest operating computer out of the group, he was nominated to share his screen so that everyone could give their opinion on what could be included on the new HMI .

11) Citation list

Correct method of citing

Wide Range of Sources

101, C., 2021. *Components 101.* [Online]
Available at: https://components101.com/sensors/pt100-rtd-temperature-sensor
[Accessed 26 1 2021].

Andrews, C., 2017. *The IET.* [Online]
Available at: https://eandt.theiet.org/content/articles/2017/07/industry-4-challenges-and-opportunities/
[Accessed 25 1 2021].

Awareness, C., 2021. *Calibration Awareness.* [Online]
Available at: https://calibrationawareness.com/iso-iec-170252017-requirements-list-of-documents-outline-and-summary
[Accessed 30 1 2021].

Bihl-Wiedemann, 2021. *Bihl-Wiedemann.* [Online]
Available at: https://www.bihl-wiedemann.de/en/applications/io-link.html?utm_source=bing&utm_medium=cpc&utm_campaign=EN%20-%20SEA%20-%20Generic&utm_term=io-link&utm_content=IO-Link
[Accessed 30 1 2021].

CCSI, 2021. *CCSI.* [Online]
Available at: https://www.ccsi-inc.com/standards-accreditation/iso-17025/
[Accessed 31 1 2021].

Components, R., 2021. *RS Components.* [Online]
Available at: https://uk.rs-online.com/web/p/flow-sensors/5114772/
[Accessed 26 1 2021].

Components, R., 2021. *RS Components.* [Online]
Available at: https://docs.rs-online.com/8ca9/0900766b81501392.pdf
[Accessed 30 1 2021].

Controlguru, 2015. *Controlguru.* [Online]
Available at: http://controlguru.com/wp-content/uploads/2015/03/loopgeneralbig.jpg
[Accessed 26 1 2021].

electronics, E., 2021. *Encore electronics.* [Online]
Available at: https://encore-elec.com/model-fl228-frequency-to-voltage-converter/
[Accessed 26 1 2021].

Expressvpn, 2021. *Expressvpn.* [Online]
Available at: https://www.expressvpn.com/what-is-vpn?msclkid=96983a606f8011870fb55a7aa79e361b
[Accessed 31 1 2021].

IET, 2015. *IET.* [Online]
Available at: https://electrical.theiet.org/wiring-matters/years/2015/57-summer-2015/energy-

efficiency-the-iet-wiring-regulations-and-future-smart-installations/
[Accessed 31 1 2021].

IFM, 2021. *IFM.* [Online]
Available at: https://www.ifm.com/us/en/product/TN2343
[Accessed 25 1 2021].

IFM, 2021. *IFM.* [Online]
Available at: https://www.ifm.com/us/en/product/SM6001?tab=details
[Accessed 31 01 2021].

IFM, 2021. *IFM.* [Online]
Available at: https://www.ifm.com/us/en/product/PI2789
[Accessed 31 1 2021].

IFM, 2021. *IFM.* [Online]
Available at: https://www.ifm.com/us/en/product/E30446
[Accessed 31 1 2021].

IFM, 2021. *IFM.* [Online]
Available at: https://www.ifm.com/us/en/product/AL1940?tab=accessories
[Accessed 31 1 2021].

IFM, 2021. *IFM.* [Online]
Available at: https://www.ifm.com/us/en/product/E30391
[Accessed 31 1 2021].

IFM, 2021. *IFM.* [Online]
Available at: https://www.ifm.com/us/en/product/AL2411
[Accessed 31 1 2021].

JUMO, 2021. *RS components.* [Online]
Available at: https://docs.rs-online.com/1515/0900766b81464812.pdf
[Accessed 26 1 2021].

legislation.gov.uk, 2016. *legislation.gov.uk.* [Online]
Available at: https://www.legislation.gov.uk/uksi/2016/1153/introduction/made
[Accessed 30 1 2021].

Luenendonk, M., 2019. *Cleverism.* [Online]
Available at: https://www.cleverism.com/industry-4-0/
[Accessed 25 1 2021].

NICEIC, 2021. *NICEIC.* [Online]
Available at: https://www.shop.niceic.com/wiring-regs-onsite-guide-18th-edition
[Accessed 31 1 2021].

Siemens, 2021. *Siemens.* [Online]
Available at: https://support.industry.siemens.com/cs/document/24960449/secure-remote-access-to-simatic-stations-via-internet-and-umts-?dti=0&lc=en-DE
[Accessed 31 1 2021].

12) Appendix

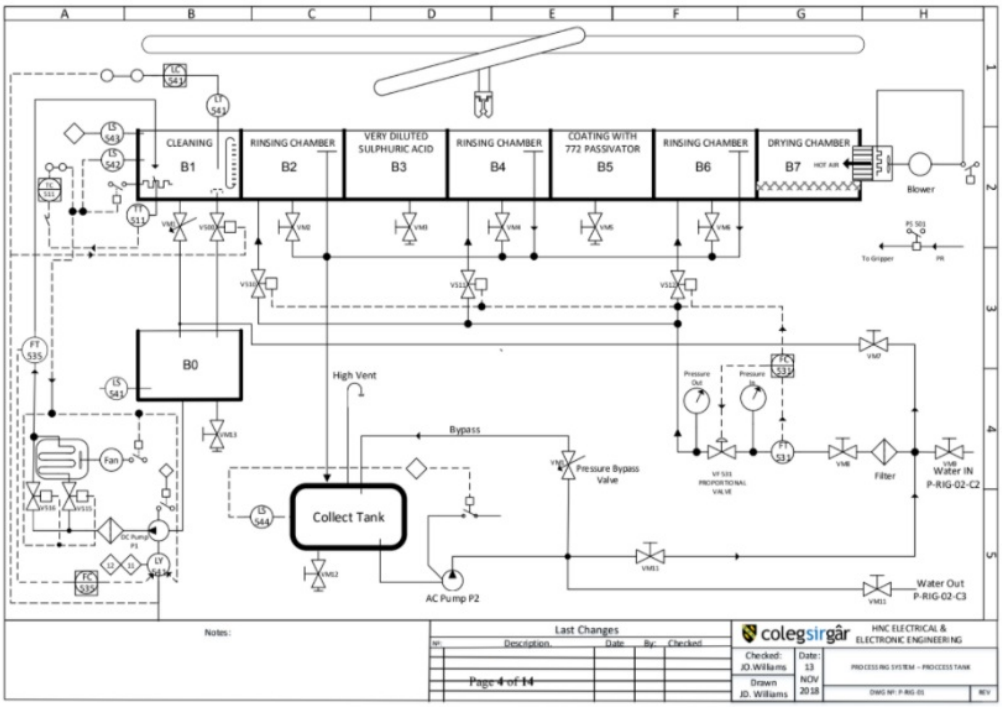
CLEANING
B1
RINSING CHAMBER
B2
VERY DILUTED SULPHURIC ACID
B3
RINSING CHAMBER
B4
COATING WITH 772 PASSIVATOR
B5
RINSING CHAMBER
B6
DRYING CHAMBER
B7
HOT AIR
Blower
To Gripper
B0
High Vent
Bypass
Pressure Bypass Valve
Pressure Out
Pressure In
Filter
Water IN P-RIG-02-C2
Water Out P-RIG-02-C3
Fan
Collect Tank
AC Pump P2
DC Pump P1
Notes:
Last Changes
Description
Date
By
Checked
colegsirgâr
HNC ELECTRICAL & ELECTRONIC ENGINEERING
Checked: JO.Williams
Drawn JD. Williams
Date: 13 NOV 2018
PROCESS RIG SYSTEM – PROCESS TANK
Page 4 of 14

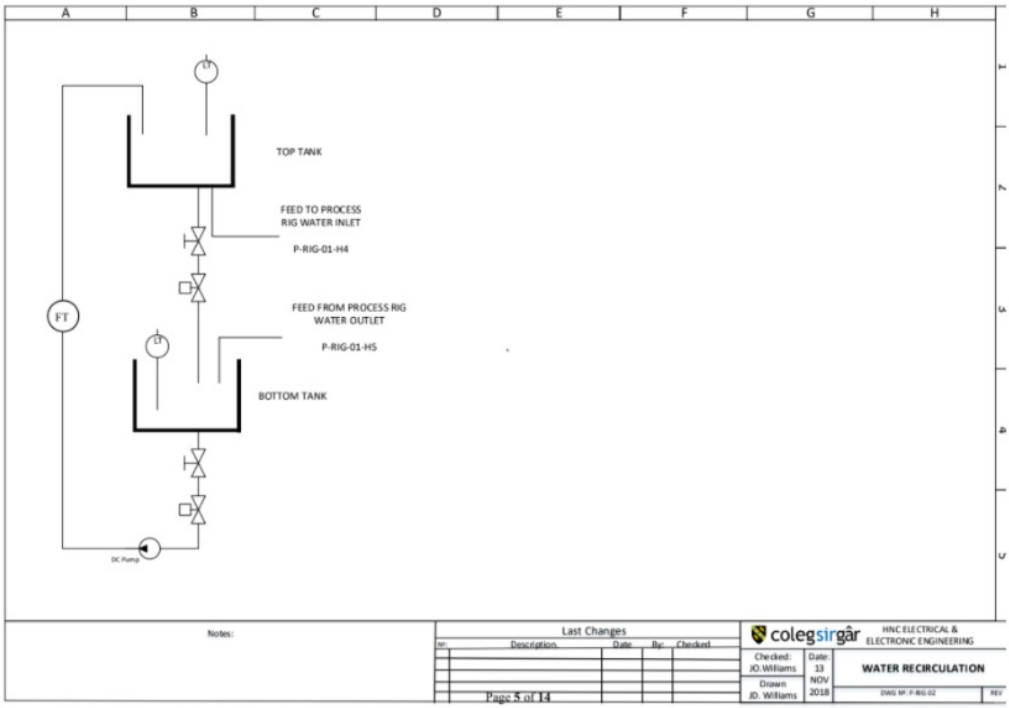
TOP TANK
FEED TO PROCESS RIG WATER INLET
P-RIG-01-H4
FEED FROM PROCESS RIG WATER OUTLET
P-RIG-01-H5
BOTTOM TANK
FT
DC Pump
Notes:
Last Changes
Description
Date
By
Checked
colegsirgâr
HNC ELECTRICAL & ELECTRONIC ENGINEERING
Checked: JO.Williams
Drawn JD. Williams
Date: 13 NOV 2018
WATER RECIRCULATION
Page 5 of 14

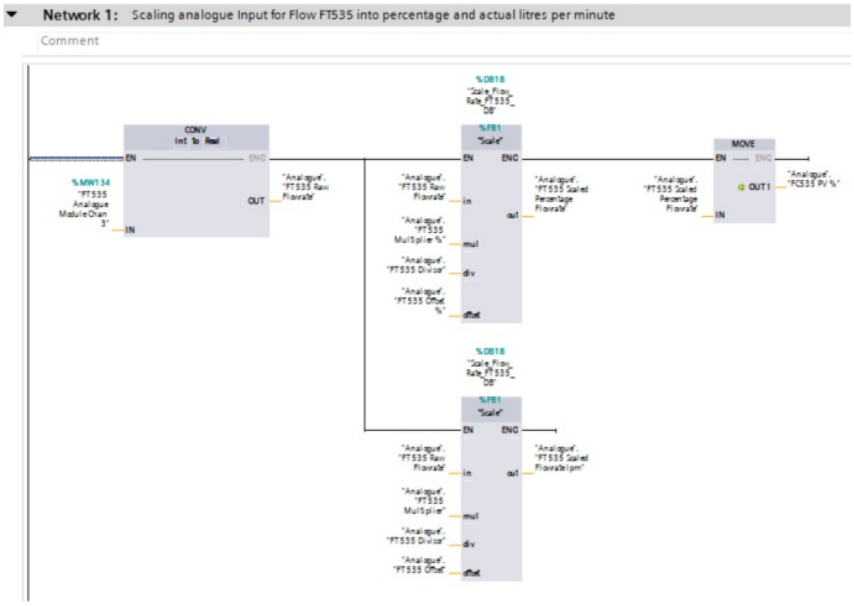
Network 1: Scaling analogue Input for Flow FT535 into percentage and actual litres per minute
Comment
CONV
Int to Real
%MW134
"FT535 Analogue Module Chan 3"
%DB18
"Scale Flow Rate_FT535_DB"
%FB1
"Scale"
MOVE
%DB18
"Scale Flow Rate_FT535_DB"
%FB1
"Scale"

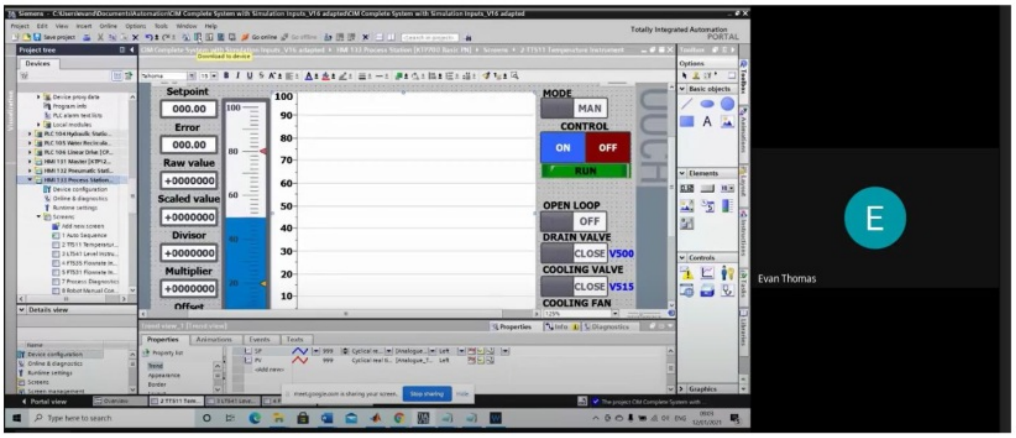
Setpoint
000.00
Error
000.00
Raw value
+0000000
Scaled value
+0000000
Divisor
+0000000
Multiplier
+0000000
Offset
MODE
MAN
CONTROL
ON
OFF
RUN
OPEN LOOP
OFF
DRAIN VALVE
CLOSE
V500
COOLING VALVE
CLOSE
V515
COOLING FAN
Evan Thomas

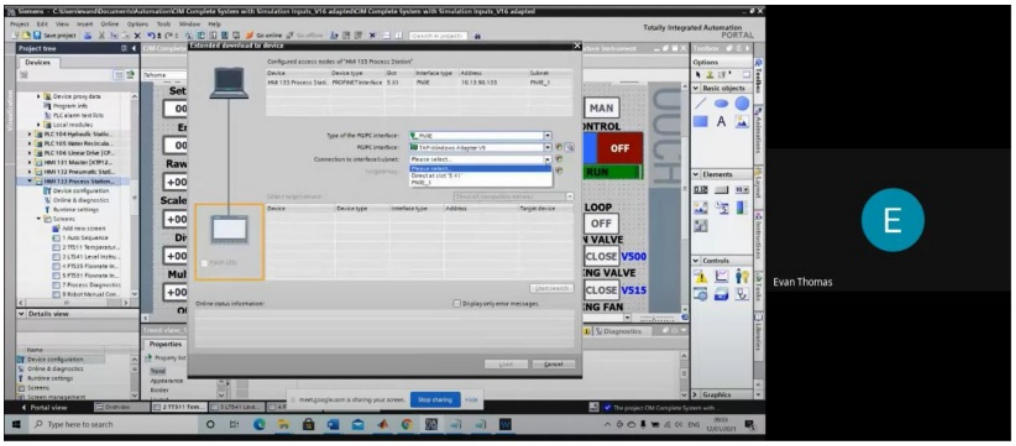
Extended download to device
Evan Thomas

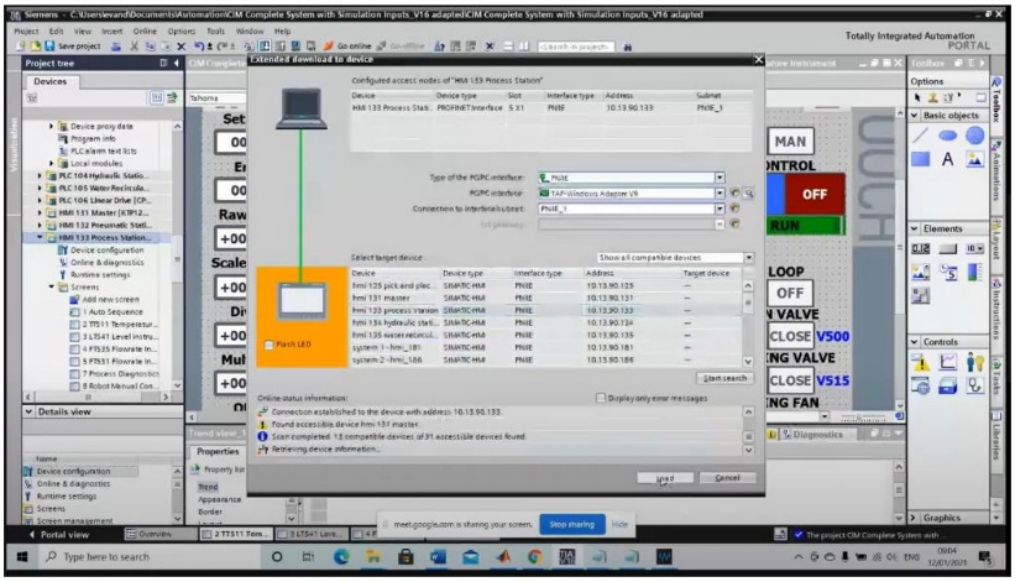
Extended download to device
Configured access nodes of "HMI 133 Process Station"
Select target device:
Online status information:
Load
Cancel

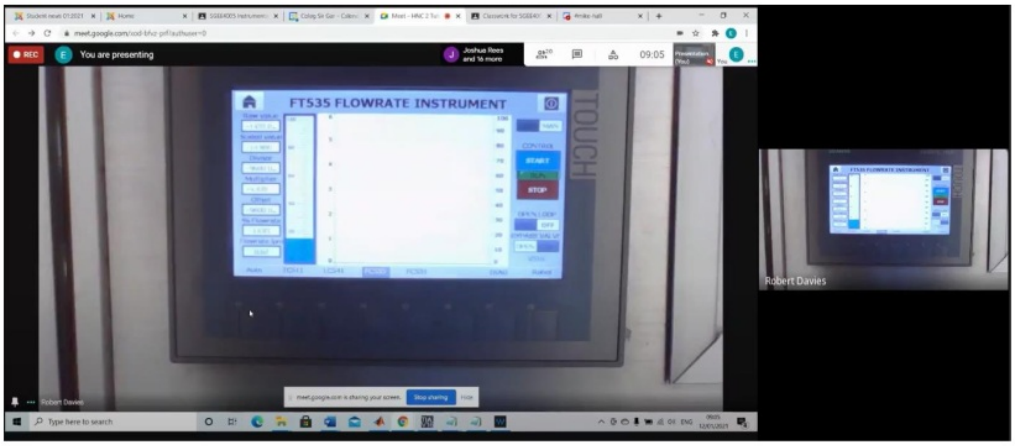
You are presenting
FT535 FLOWRATE INSTRUMENT
TOUCH
START
STOP
Robert Davies

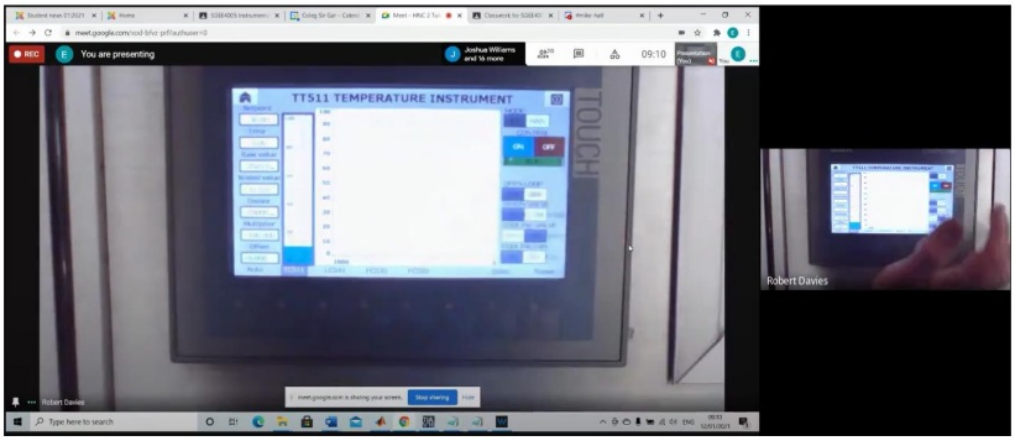
You are presenting
TT511 TEMPERATURE INSTRUMENT
TOUCH
ON
OFF
Robert Davies

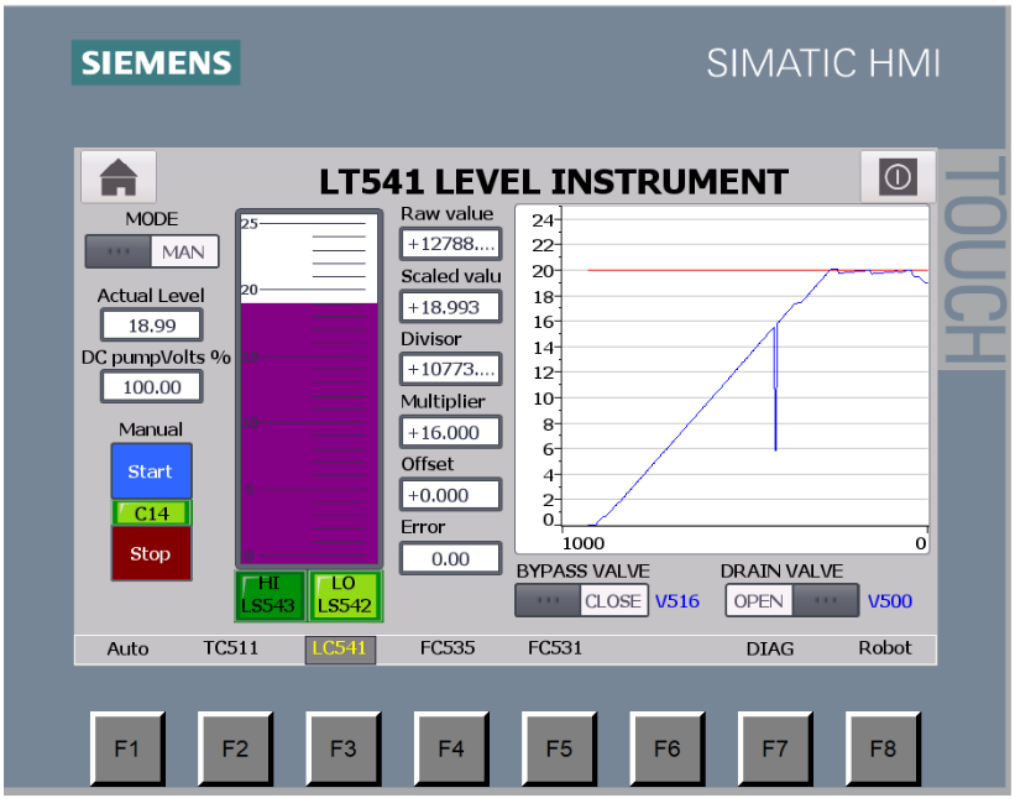
SIEMENS
SIMATIC HMI
LT541 LEVEL INSTRUMENT
TOUCH
MODE
MAN
Actual Level
18.99
DC pumpVolts %
100.00
Manual
Start
C14
Stop
HI
LS543
LO
LS542
Raw value
+12788....
Scaled valu
+18.993
Divisor
+10773....
Multiplier
+16.000
Offset
+0.000
Error
0.00
1000
0
BYPASS VALVE
CLOSE
V516
DRAIN VALVE
OPEN
V500
Auto
TC511
LC541
FC535
FC531
DIAG
Robot
F1
F2
F3
F4
F5
F6
F7
F8

1910593

GRADEMARK REPORT

FINAL GRADE

85/100

GENERAL COMMENTS

Instructor

PAGE 1

Text Comment. An excellent report with a few improvements that could be made.

Text Comment. Inaccurate word count since Turnit-in see 4323 and there are few words in the appendix, word count has been exceeded.

PAGE 2

QM

Good Structure

Report is structured exactly as stated in the assignment brief.

PAGE 3

PAGE 4

PAGE 5

PAGE 6

PAGE 7

PAGE 8

PAGE 9

QM

Good formatting of paragraph through full justification and 1.5 line spacing

QM

Correctly cited

Citation method conforms to Harvard standard, well done.

QM

Correctly cited

Citation method conforms to Harvard standard, well done.

QM

Correctly cited

Citation method conforms to Harvard standard, well done.

QM

Correctly cited

Citation method conforms to Harvard standard, well done.

Text Comment. This type of text wrapping is distracting and not appropriate for an academic report of this nature.

PAGE 10

QM

Correctly cited

Citation method conforms to Harvard standard, well done.

QM

Correctly cited

Citation method conforms to Harvard standard, well done.

QM

Correctly cited

Citation method conforms to Harvard standard, well done.

PAGE 11

PAGE 12

QM

Correctly cited

Citation method conforms to Harvard standard, well done.

Text Comment. It is not appropriate nor necessary to included blocks of text like this, extract the information and cite your source instead.

QM

Correctly cited

Citation method conforms to Harvard standard, well done.

PAGE 13

Text Comment. It is unncessary to provide picture like this

PAGE 14

Text Comment. two columns are missing for non-linearity error

PAGE 15

Text Comment. incorrect scale, pressure should not exceed 5 bar

PAGE 16

PAGE 17

Text Comment. X-axis should have a scale of 0-100 degrees C

PAGE 18

PAGE 19

PAGE 20

PAGE 21

PAGE 22

QM

Write in the third person

Don't refer to your self as I, me, my or others as you etc. Avoid personal references. If absolutely necessary, refer to self as "the author".

QM

Write in the third person

Don't refer to your self as I, me, my or others as you etc. Avoid personal references. If absolutely necessary, refer to self as "the author".

PAGE 23

PAGE 24

Text Comment. Most of these images should be in the appendix

PAGE 25

PAGE 26

PAGE 27

PAGE 28

PAGE 29

PAGE 30

PAGE 31

PAGE 32

PAGE 33

QM

Correct method of listing.

You have listed your sources correctly according to the Harvard method.

QM

Wide Range of Sources

You have shown good evidence of reading from a wide range of sources.

PAGE 34

PAGE 35

PAGE 36

PAGE 37

PAGE 38

PAGE 39

GRADING FORM: NEW CSG-RUBRIC

EVAN THOMAS

85

1. ENGAGEMENT WITH LITERATURE

Exceptional engagement with an extensive range of relevant and credible literature. High-level referencing skills consistently applied. (17/20)

17

2. KNOWLEDGE AND UNDERSTANDING

Excellent knowledge and understanding of the basic underlying concepts and principles of the subject (16/20)

16

3. COGNITIVE AND INTELLECTUAL

Exceptional evaluation of the underlying concepts and principles based evidence. Outstanding interpretation of qualitative and quantitative data. Exceptional ability to devise arguments using evidence and make wholly appropriate and valid judgements (18/20)

18

4. PRACTICAL APPLICATION

Exceptional levels of application and deployment skills in particular practical contexts. Outstanding identification of problems in particular contexts and formulation of wholly appropriate, thoughtful solutions / different approaches. (18/20)

18

5. TRANSFERABLE SKILLS

Work is coherent, very fluent and is presented professionally. Can work effectively independently

16

and/or as part of a team, with an excellent contribution to group activities. Demonstrates excellent skills for employment requiring the exercise of some personal responsibility with an appetite for further development. However, text wrapping around figures is distracting and many of them should be in the appendix or not included and you must always write in the third person. (16/20) Word count penalty will be applied next time.