Prifysgol Cymru
Y Drindod Dewi Sant
University of Wales
Trinity Saint David

Engineering / Technical Drawing

A Guide to the Production & Interpretation of Drawings to BS8888

Lecture 2

Richard Morgan

SolidWorks

BSi Business Information

Dimensioning

Guidelines

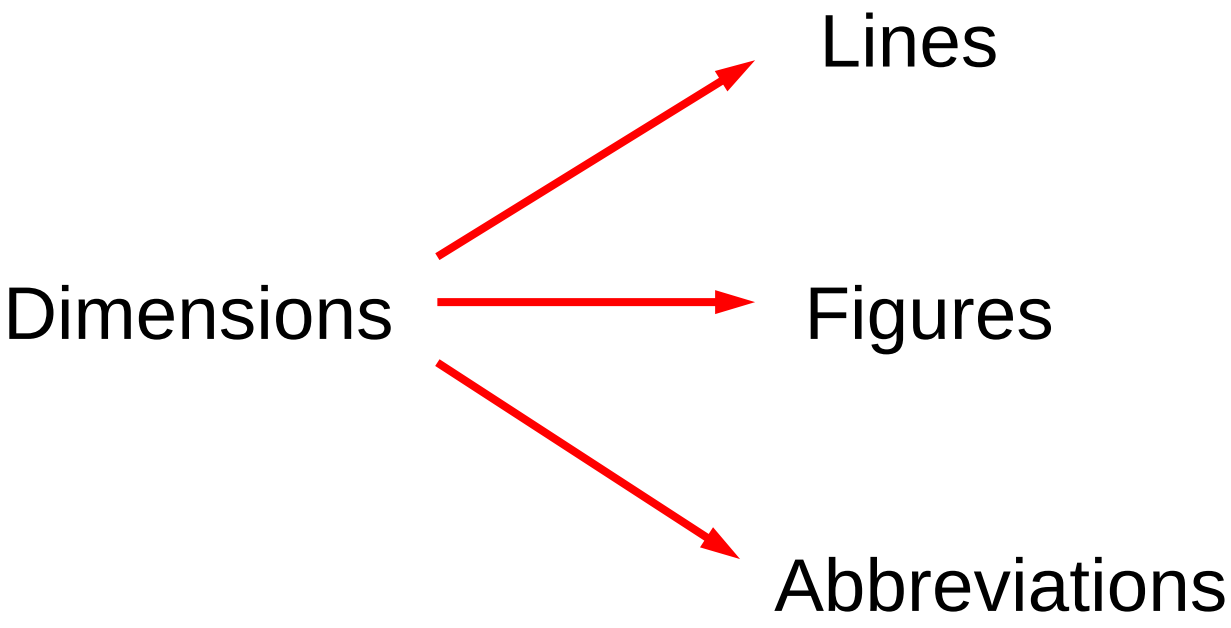

Dimensioning
Guidelines

Figures for dimensions → Figures showing dimensions should be carefully drawn or printed

Position of decimal point

- → Decimal points should be placed in the same position as a full stop.
- → In decimal places numbers of less than 1, a zero (0) should be placed before the decimal
point

Dimensioning

Guidelines

Numbers with more than three figures

- Four figure numbers should not carry a space
- Numbers containing more than four figures should be grouped in threes
- A comma should not be placed between the groups of three

1234567890 1.5 6.75 0.25

465 8345 35 250 12 500 235 750

Abbreviations used with Dimensions

The following abbreviations are always placed in front of the dimension to which they refer

A/F – Across flats

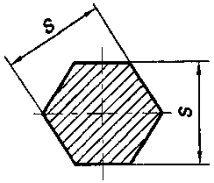

C'BORE – Counter bore

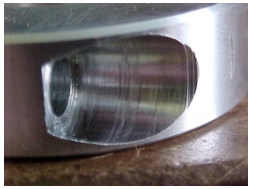

M – ISO metric thread

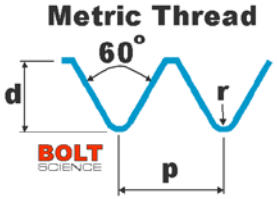

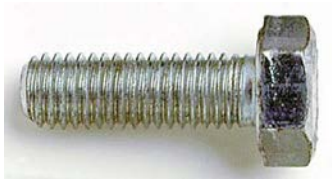

PCD – Pitch Circle Diameter

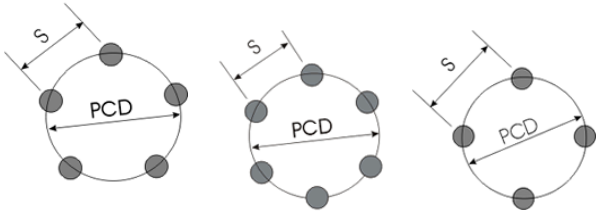

Abbreviations used with Dimensions cont.

R – Radius

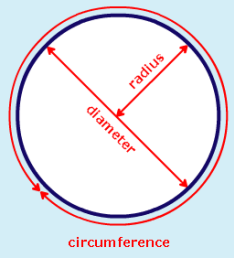

S'FACE – Spot face

SPHERE R – Spherical Radius

SPHERE Ø – Spherical Diameter

Abbreviations used with Dimensions cont.

Ø – Diameter

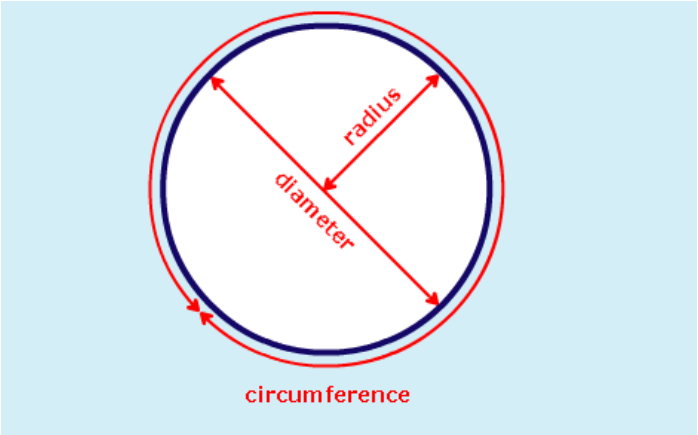

☐ - Square

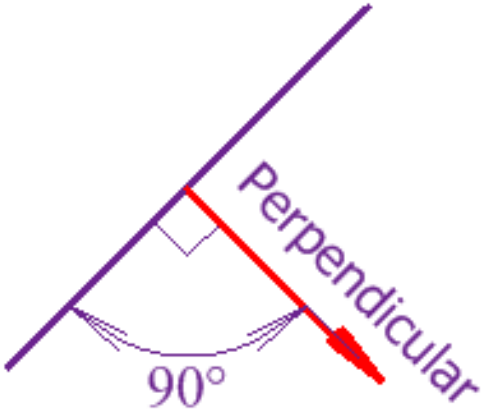

Dimension Units

Frequently stated on the drawing

If stated on the dimension its placed after the figures of the dimension

BS/ISO dimensions include:

- mm – millimetre
- cm – centimetre
- m – metre

Positioning of Dimensions

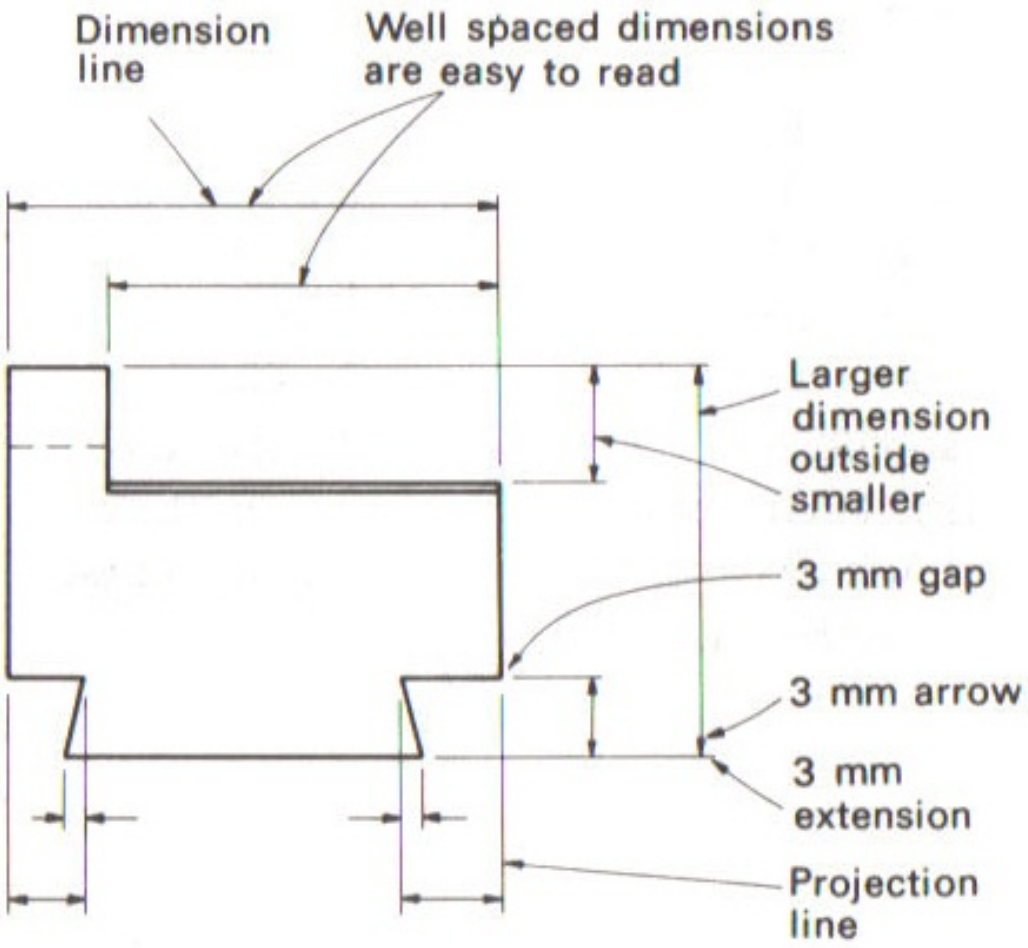

Rules for Dimensioning
Dimensioning from a Point of Intersection

If projection lines extended from a drawing outline meet at a point, the intersection of the projection lines should be clearly marked with a round dot through which the projection lines extend

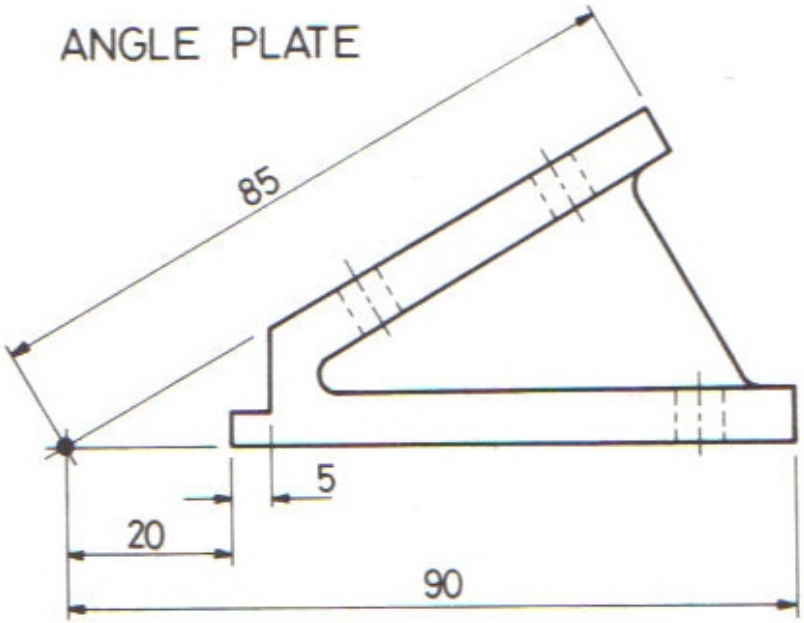

Rules for Dimensioning
Small Dimensions

Methods of Inserting small dimensions on a drawing are shown in the diagram

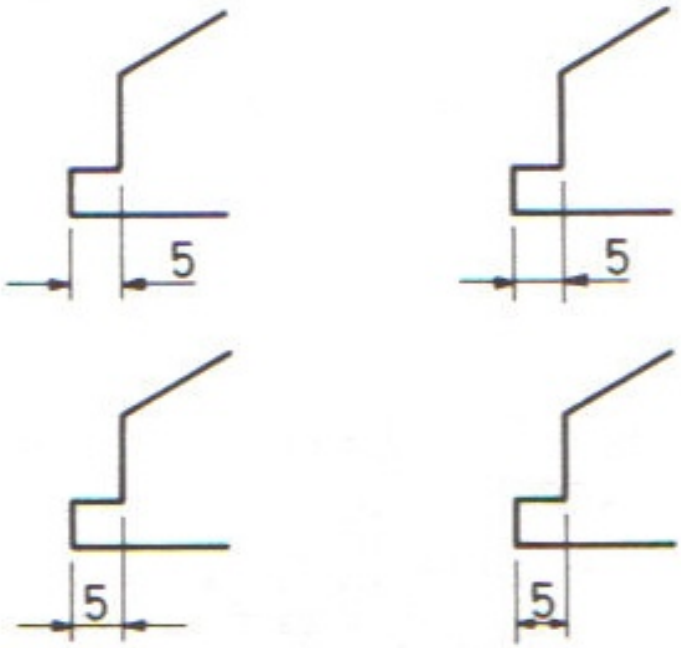

Rules for Dimensioning
Dimensions taken from a common datum

Alternative methods of placing the length dimensions from a common datum are shown on a front view of a wheel stud from a motor vehicle

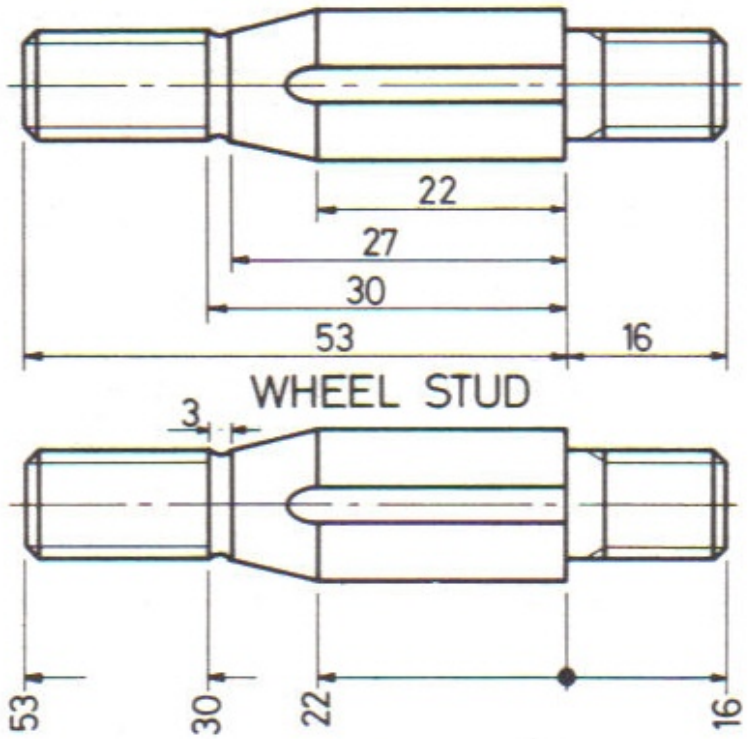

Rules for Dimensioning
Redundant Dimensions

The dimension (75) in the front view of a brake pin is an overall length dimension based on additions of the smaller length dimensions

This component would be manufactured to the smaller dimensions of length

The overall dimension is for reference only and is not truly necessary

Redundant dimensions are placed in brackets

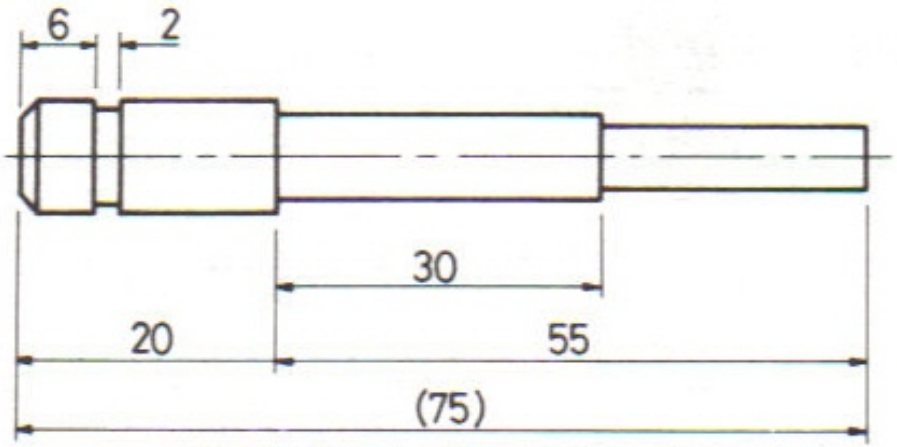

BRAKE ASSEMBLY PIN

Rules for Dimensioning
Dimensioning Radii & Diameters

Methods of dimensioning the radii of arcs, diameters of circles & holes and the radii & diameters of spherical parts are shown in drawings of a casting, a pin from a petrol pump, a spherical pivot and an extension plate from a car seat

The dimension line should pass through the centre of the arc, circle or sphere

A circle can also be dimensioned by the method shown for the right hand circle of the plan of the casting

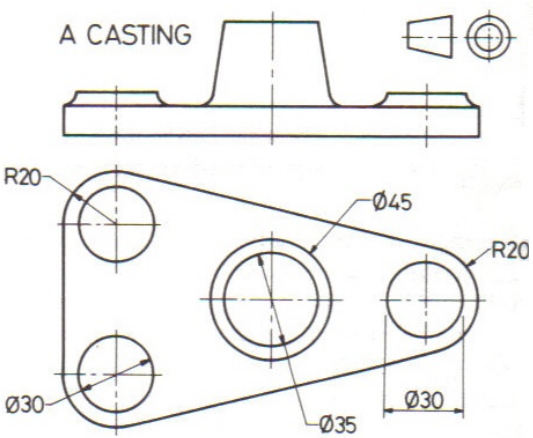

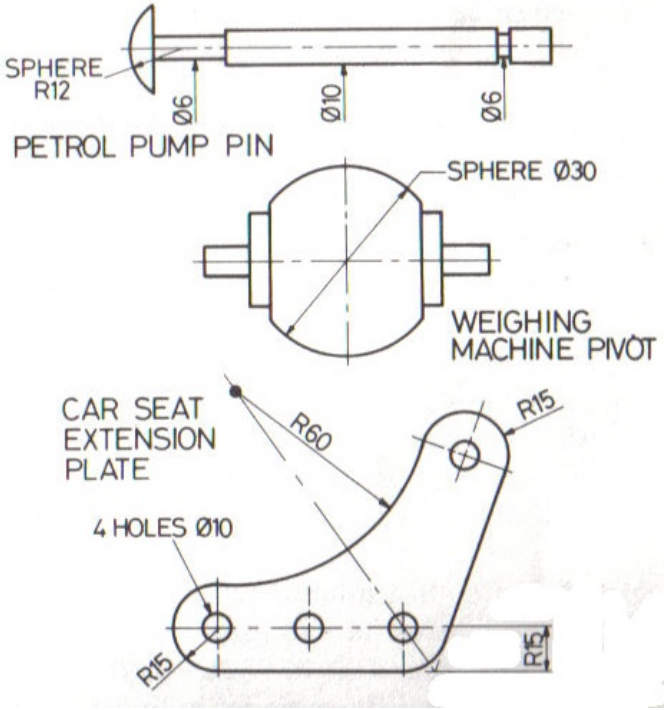

Rules for Dimensioning
Dimensioning Holes

Dimensions for holes should have the word HOLE placed in front of the dimension

A typical example of dimensioning counter-bored holes is shown in the diagram

Countersunk holes would be dimensioned as follows:
Ø CSK AT 90º TO Ø18

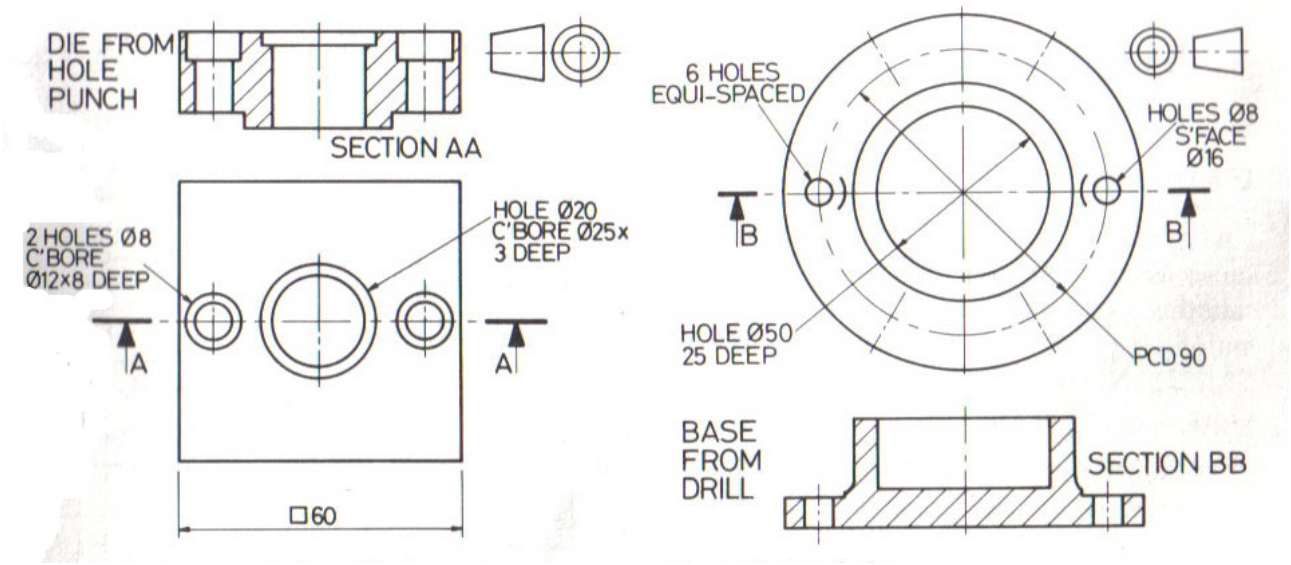

Rules for Dimensioning
Dimensioning Angles

Four methods of dimensioning angles are shown

Angles of less than one degree should be preceded by a 0 e.g. 0.45º

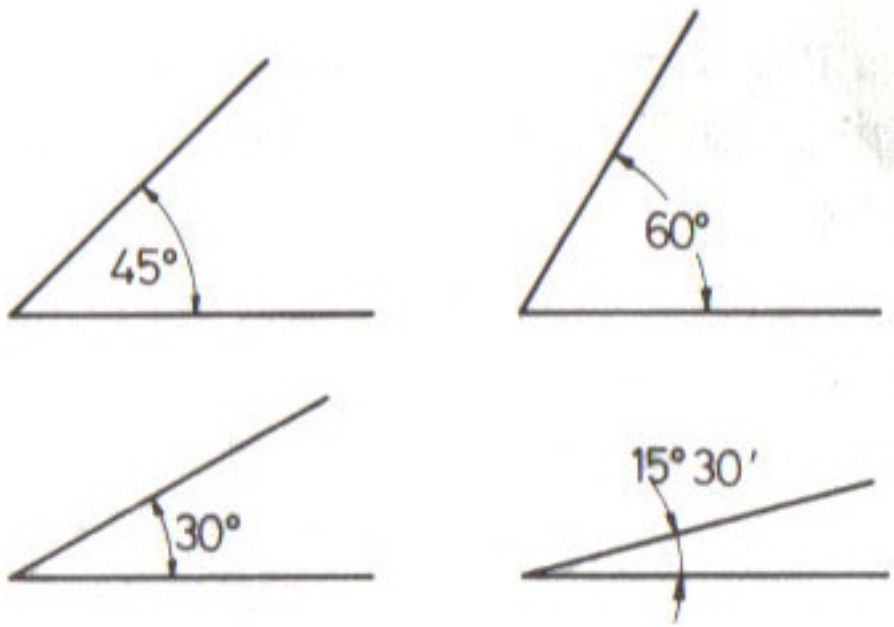

The Use of Leaders

If notes are to be included in drawings, leaders may be needed to indicate the parts to which the notes refer

Leader lines ending on the drawing outline should terminate in an arrow

Leader lines ending within the drawing outline should terminate in a dot

Notes should normally be written in capital letters and not underlined

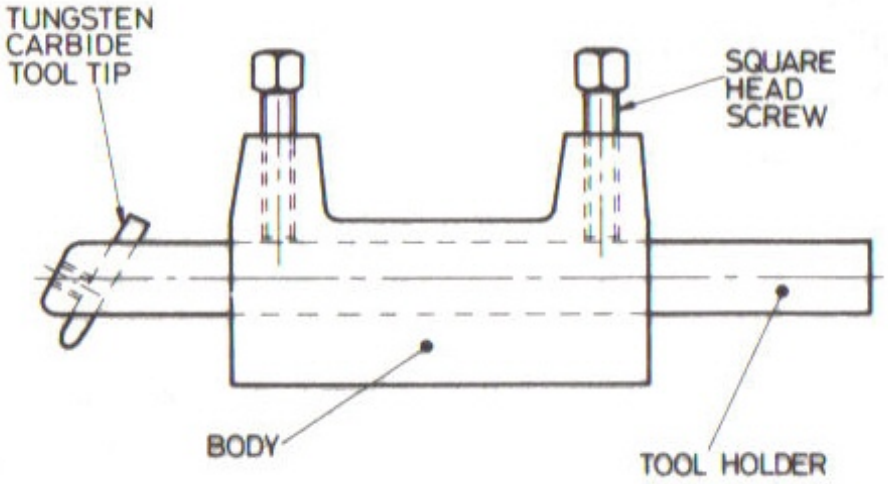
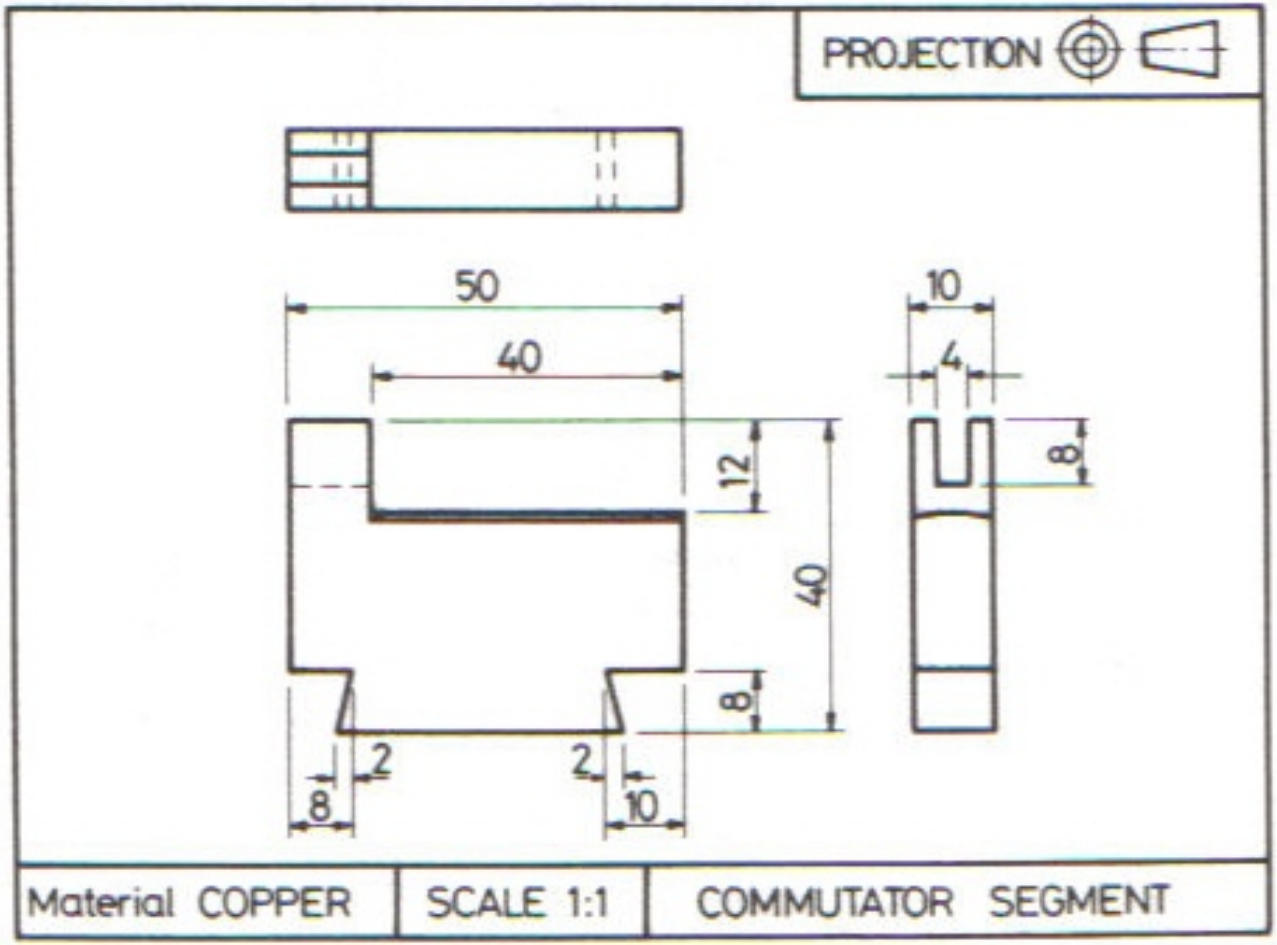
Application of Dimensioning