Prifysgol Cymru
Y Drindod Dewi Sant
University of Wales
Trinity Saint David

An automated system to improve the efficiency of the Paint shop

By Oliver Kucyj

Project Brief

The paint shop is used to powder coat metal parts which are used for the external casing of electric heaters. The system has 4 paint guns set in pairs opposite each other. The system requires 3 operating modes: All four guns on, left guns only on and right guns only on. Figure 1 shows the setup of this system.

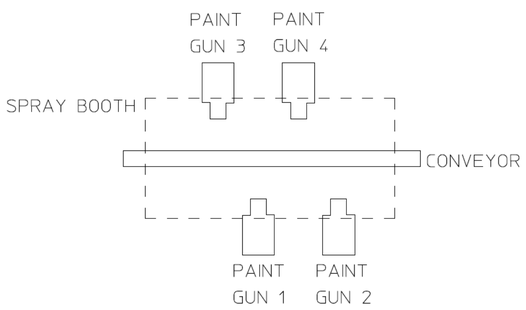

Figure 1 - Spray booth layout

Previously, this stage of the process is inefficient. The paint guns are simply switched on manually and left on whilst the parts move through the cabinet at a slow place. Paint is wasted when there are large gaps between parts and when the parts have not yet been placed onto the conveyor.

Aim and Objectives

The aim of this project was to **improve the efficiency of the paint shop at Consort**. To achieve this, the work was divided into 4 objectives. These objectives are listed below.

- To design and implement a system capable of monitoring the location & length of the parts entering the paint booth as well as the conveyor speed.
- To design and implement a PCB which can individually and automatically switch the paint guns on/off based on the inputs it receives.
- To design and implement a software for the PCB.
- To design and implement a full system which contains the solutions to all 3 prior objectives. This system should be integrated into the existing control cabinet.

As the system will be expanding on the current setup, the health and safety features already in place will not be compromised.

Success Criteria

This project will be considered a success if all four objectives are met, allowing a fully functional system to be installed onto the existing control system. On top of this, the system must meet the following criteria.

- It must switch the paint guns on/off individually based on the location of the parts.
- It must allow the operator to easily switch between the 3 operating modes
- It must allow the operator to bypass the automatic system to use the existing manual controls
- It must be able to switch the paint guns off if the conveyor stops.

Literature Review

The literature review aimed to identify the most suitable method of automatically switching the paint guns on/off. The main findings are listed below.

- A **thru-beam light curtain** is required to monitor the parts entering the spray booth. These devices have good range and perform well in dusty environments such as the paint shop [1]. The curtain style is required due to the range of different shaped parts painted at Consort.
- A **barrel style inductive proximity sensor** is required to monitor the conveyor speed. The teeth of the gear were inaccessible, so a screw was installed onto the gear. The sensor detects this screw every time it passes, allowing the conveyor speed to be calculated.
- **TRIACs** are used to switch the paint guns on/off individually. TRIACs are less likely to develop faults than electromechanical relays [2] and are cheaper than solid-state relays.
- **Zero-cross TRIAC drivers** are used to drive the TRIACs. This provides galvanic isolation between the load and the microcontroller. Zero-cross switching reduces harmonics and switching losses since the instantaneous voltage is 0V at the point of switching [3].
- A **microcontroller** is required to read the inputs from the two sensors and switch the TRIACs on at the correct times. The PIC18F46K22 [4] was used. The MikroC PRO for PIC compiler was used to write the software [5]. This is ideal for people new to writing software.

These are the main components required to improve the efficiency of the paint shop. The final system was designed to incorporate these components into one compact system.

Implementation

Next, the circuit and wiring diagrams were created. The circuit diagram consists of the major components discussed in the literature review. The wiring diagram shows the internal wiring within the enclosure which will be installed into the control cabinet. This includes connections between the PCB, the control switches and the external connectors. The control switches are used to switch between the 3 operating modes and to bypass the automated. The diagrams are shown in figures 2 & 3. Figure 4 shows the actual enclosure with the PCB and wiring installed.

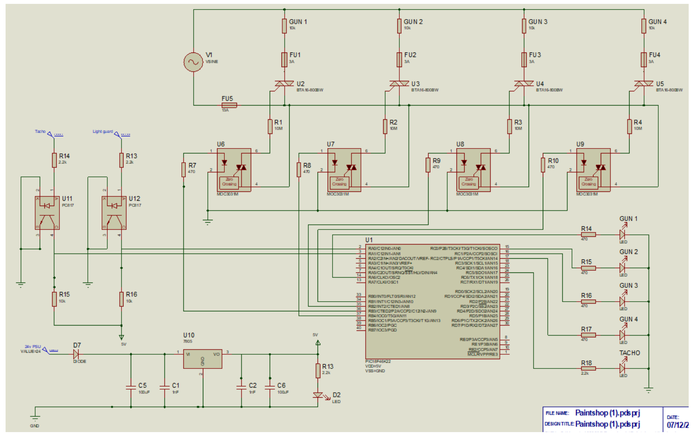

Figure 2 - Circuit diagram

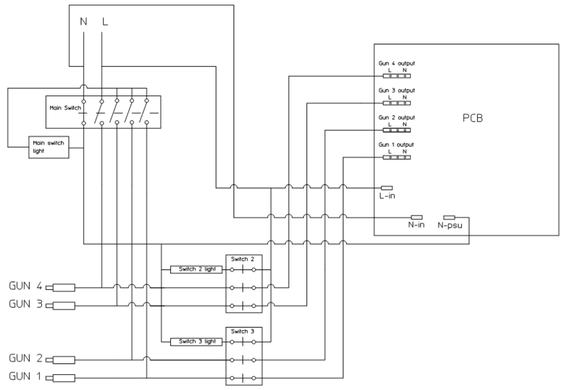

Figure 3 - Enclosure wiring diagram

Testing the system

Testing was an essential part of the development of this system. It was carried out in 3 phases to provide continued development throughout the design.

Phase 1 - This was completed using a breadboard circuit utilizing 2 microcontrollers. One microcontroller was used to replicate the inputs from the two sensors. The second microcontroller received the inputs and switched the outputs.

Phase 2 - This was completed by connecting the system shown in figure 3 to the test microcontroller from phase 1. It was used to validate the operation of the PCB and switch arrangement.

Phase 3 - This is the final testing phase carried out after the final installation.

This extensive testing procedure was essential. It ensured that any design errors, software glitches or mistakes were identified.

Conclusion

Overall, the project has been a success. The aim and all objectives were complete. All features specified in the success criteria were implemented.

The system switches the paint guns on when a part approaches and switches the paint guns off when the part passes or if the conveyor is stopped. The 3 operating modes can be selected using the switches and the automatic system can easily be bypassed if required. The majority of the components fit inside the control cabinet in the enclosure shown in figure 4.

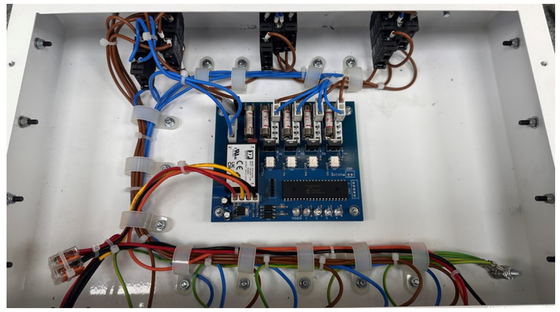

Figure 4 - Enclosure wiring with the PCB, switches and external connectors

References

[1] A. Javed, H. Tariq and A. Khalid, "Implementation of IR sensors in thru-beam and diffuse-reflective modes for obstacle detection," in *2017 international symposium on Wireless Systems and Networks (ISWSN)*, Lahore, 2018.

[2] Omron, "Technical Explanation for Solid-state Relays," Omron, [Online]. Available: https://www.ia.omron.com/data_pdf/guide/18/ssr_tg_e_9_2.pdf. [Accessed 10 September 2023].

[3] P. Horowitz and W. Hill, The Art of Electronics, vol. 3, New York: Cambridge University Press, 2015.

[4] Microchip Technology Inc, "28/40/44-Pin, Low-Power, High-Performance Microcontrollers with XLP Technology," Microchip Technology Inc, [Online]. Available: https://ww1.microchip.com/downloads/en/DeviceDoc/40001412G.pdf. [Accessed 14 September 2023].

[5] MikroE, "mikroC PRO for PIC," MikroE, [Online]. Available: https://www.mikroe.com/mikroc-pic. [Accessed 18 September 2023].