SWANSEA METROPOLITAN UNIVERSITY
PRIFYSGOL FETROPOLITAN ABERTAWE

Geometric Weight Transfer and Wheel Load Distribution

Further parts of the weight transfer

Having determined the most significant weight transfer the final, total weight transfer can be found by adding what are usually two less significant weight transfers to the total already found

2. **Geometric weight transfer due to sprung mass**
3. **Geometric weight transfer due to the unsprung mass**

2. Geometric weight transfer due to sprung mass WT_{src} taken as acting at the roll centre height and which is resisted by the tyres alone.

$$WTsrcf = \frac{Msf \times a_Y \times hf}{Tf}$$ Eqn 11f

$$WTsrcr = \frac{Msr \times a_Y \times hr}{Tr}$$ Eqn 11r

Results for WT_{srcf} and WT_{srcr}

WT_{srcf} =

WT_{srcr} =

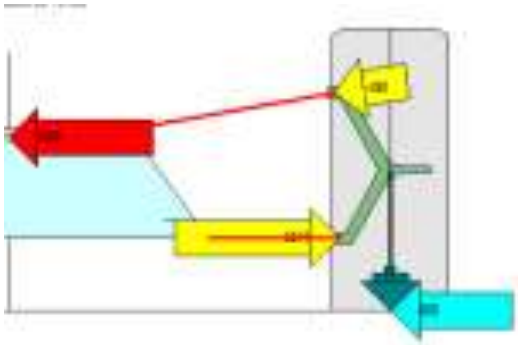

3. Weight transfer due to the unsprung mass - taken as acting at the height of the wheel centre and is resisted by the tyres alone

$$WTusf = \frac{Musf \times a_y \times r}{Tf}$$ Eqn 12f

$$WTusr = \frac{Musr \times a_y \times r}{Tr}$$ Eqn 12r

Results for WT_{usf} and WT_{usr}

WT_{usf} =

WT_{usr} =

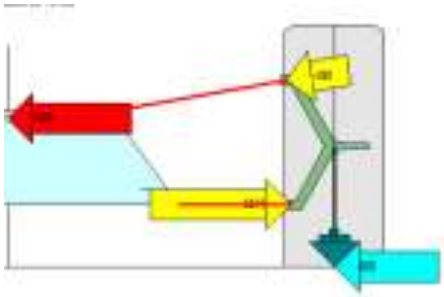

Total weight transfer

The total weight transfer is then found from

Front = $WT_{sf} + WT_{srcf} + WT_{usf}$

(Eqn 10f + Eqn 11f + Eqn 12f)

Rear = $WT_{sr} + WT_{srcr} + WT_{usr}$

(Eqn 10r + Eqn 11r + Eqn 12r)

Total weight transfers

Front

Rear

Check value

If the calculations have been carried out accurately the total of the distributed weight transfer found by this method will equal the simple weight transfer found from

$$WT = \frac{M_t a_y H}{T}$$

But this will only work if the CG Height is for the combined sprung and unsprung masses

Determination of individual wheel loads

The following suffixes are used to identify the wheel loads .

o = outer i = inner z = vertical y = lateral

So, for example, F_{zof} = Vertical load on the outer front tyre

The front and rear, outer wheel loads can now be determined by taking the static wheel loads and <u>adding</u> the load transfers to them.

Similarly the inner wheel loads can be determined by <u>subtracting</u> the load transfers from their static loads.

Example - Front Outer Wheel Load

Fzof = (Msof + Musof) x 9.81 + Total Front Weight Transfer

Final individual corner loads

Corner ⟵

Front ↑

F_{zif}	F_{zof}
F_{zir}	F_{zor}

Front outer wheel load F_{zof} for example data

The car is turning left so the weight transfer calculated will be added to the static load on the front right wheel due to Unsprung mass (M_{sf}) and the Sprung mass (M_{usf})

Static load per wheel $= (M_{sf}/2 + M_{usf}/2) \times 9.81$

$= (312/2 + 60/2) \times 9.81$

$= (156 + 30) \times 9.81$

$= 1824.66$ N

Front outer wheel load F_{zof}

Total front weight transfer =

Total wheel load

F_{zof}= Total front weight transfer + Static load

Results for individual wheel loads

$F_{zif} =$

$F_{zof} =$

$F_{zir} =$

$F_{zor} =$

Modifications to calculations needed for a live of deDion type axle

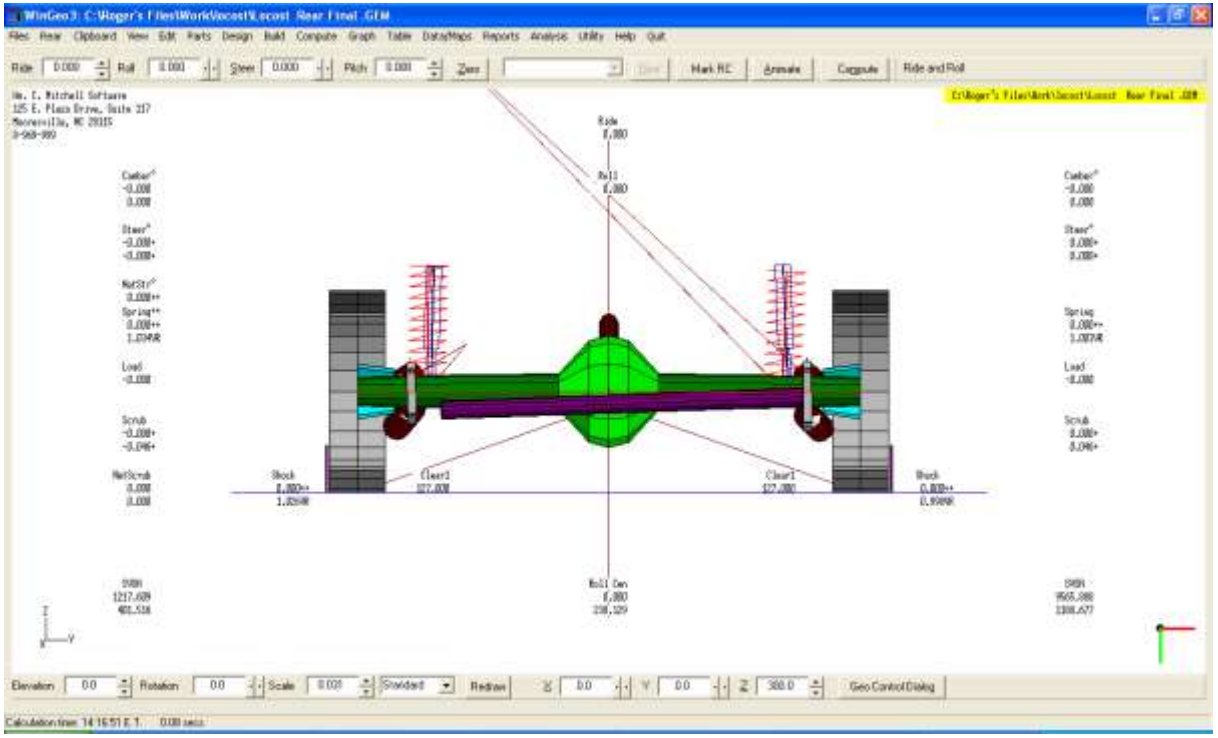

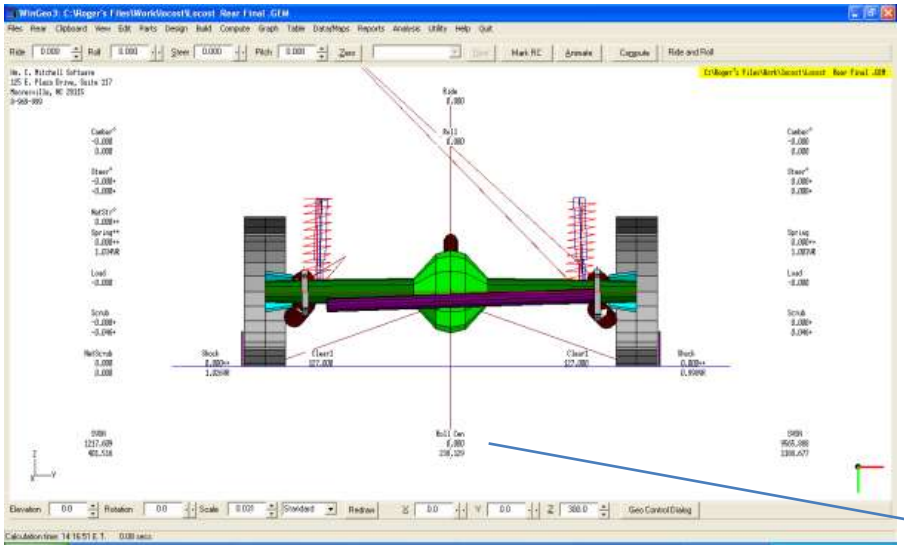

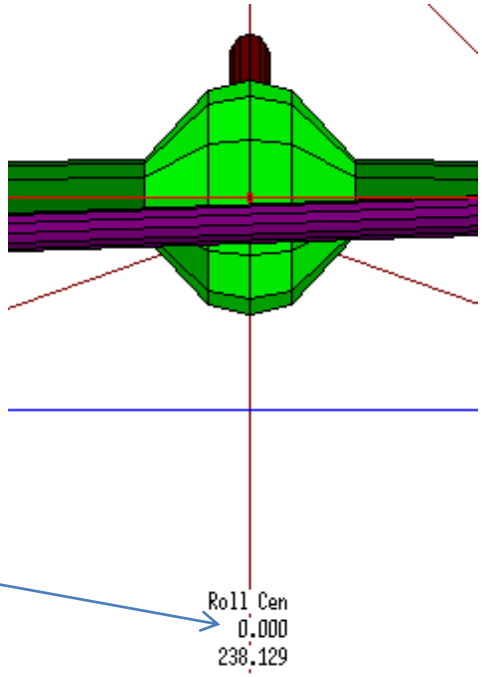
Roll Cen
0.000
238.129

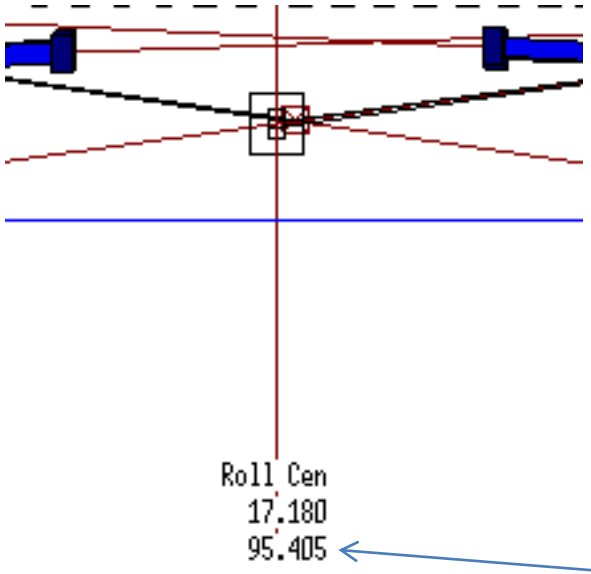
Roll Cen
17.180
95.405

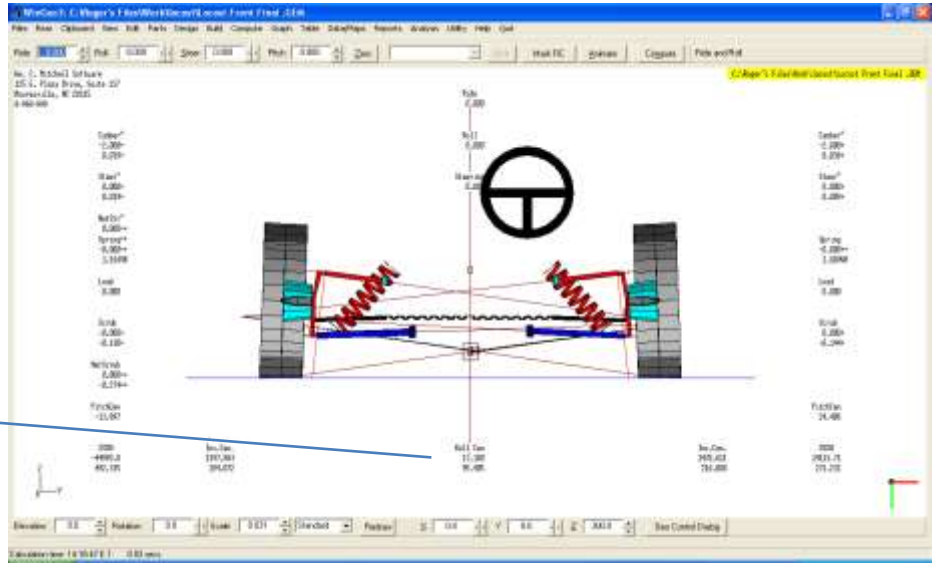

Live axle calculation

Where the vehicle has a rear axle the spring track is used instead of the wheel track and spring rate is used instead of the combined wheel and tyre rate. The body now compresses the springs across the spring track Ts rather than the wheel track.

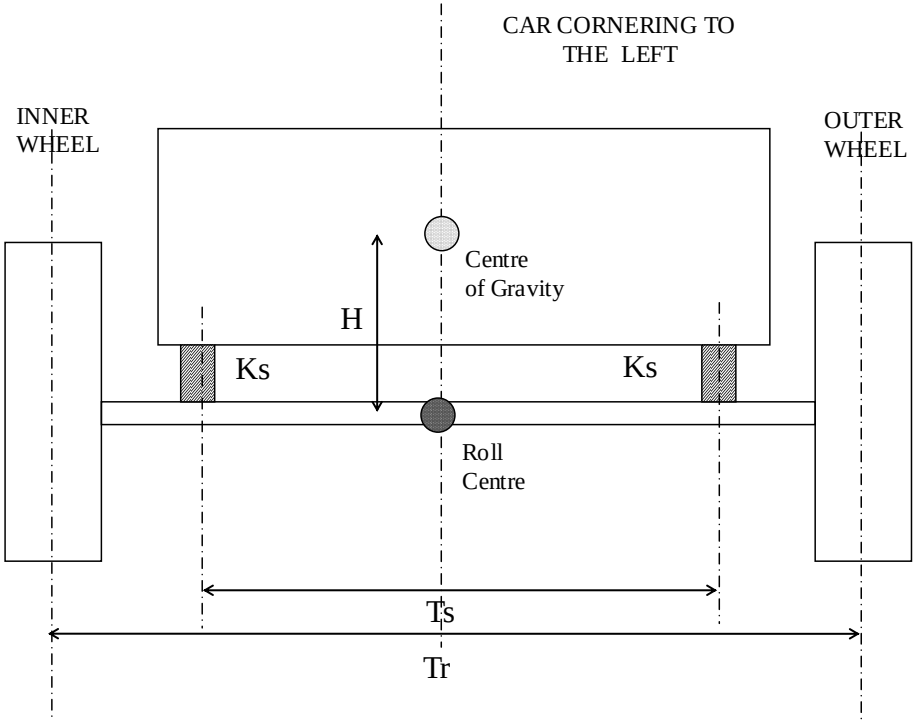

Roll stiffness for a car with a live axle

The analysis is exactly the same but

Spring track, T_s replaces T_r

K_{wr} is equal to K_{sr} (unless some suspension leverage exists due to the positioning of the Spring)

deflection δ of the wheel is now the direct deflection of the spring on the axle.

$K_{\varphi r}$ then becomes

$$K_{\varphi r} = \left(\frac{T_{sr}^2 \times K_{wr}}{2}\right) \quad \text{Nm/Rad} \qquad (\text{Eqn13})$$

Roll angle

The roll angle is now found in the same way as before

$$\theta = \frac{M_{ot}}{K_{\varphi t}}$$

Weight transfer with live rear axle

With a live rear axle the load increase at the spring is not the weight transfer experienced at the wheel. As the body rolls relative to the axle the outer spring is compressed and the spring load increase is F_{sr} then:

$$Fsr = \frac{\theta \times Ts \times Ksr}{2}$$

The increased <u>wheel</u> load produced by this increased <u>spring</u> load is WT_{srl}

To find the weight transfer reacted at the wheel,

Equate the moment produced by the increased wheel load WT_{srl} with moment produced by increased spring load F_{sr}

$$WT_{srl} \times T_r = F_{sr} \times T_s$$

Substituting for F_{sr} gives

$$WT_{srl} = \frac{T_s^2 \times \theta \times K_{sr}}{2 \times T_r} \qquad \text{Eqn 14}$$

Example 2 Data

T_f	Front track	1.270 m
T_r	Rear track	1.335 m
Ts	Spring track	0.96m
L	Wheel base	2.351 m
H'	CG height above ground	0.374 m
H	CG height above Roll axis	m
M_{sf}	Front sprung mass	312 kg
M_{sr}	Rear sprung mass	328 kg
M_{usf}	Front total unsprung mass	76 kg
M_{usr}	Rear total unsprung mass	88 kg
r	Rolling radius of tyre	0.275m
h_f	Front RC height	95 mm
h_r	Rear RC Height	238 mm
K_{wr}	Rear wheel rate	29,155 N/m
K_{wf}	Front wheel rate	60 025 N/m
SLf	Front suspension leverage	1.83
a_y	Lateral acceleration	$6 m/s^2$

Front suspension - unequal length double wishbones

Rear suspension - live axle

Finding the Height of CG above roll axis

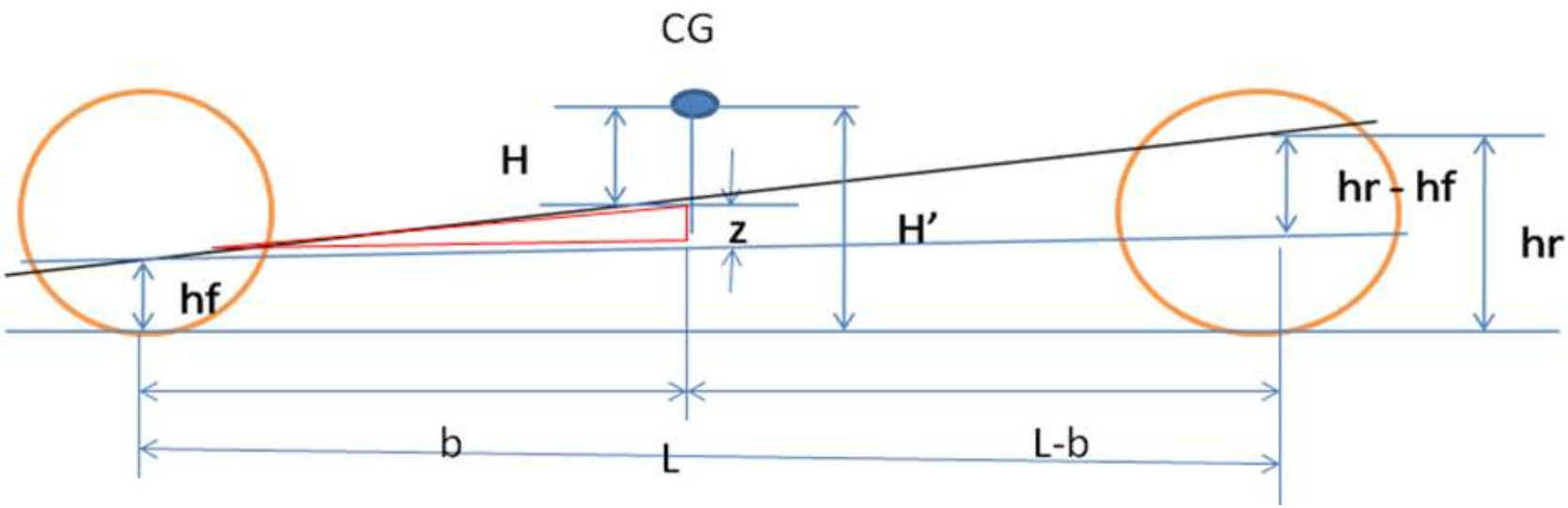

Example to find CG height above roll axis

As an example assume:

Mf =300 kg Total rear scale reading

Mr = 342 kg Total front scale reading

L = 2351mm Wheelbase

H' = 340 mm Height of CG above ground

hf = 95mm Front rc height

hr = 238 mm Rear rc height

$$642 * b = 2351 * 342$$

Giving b= 1255mm from the front wheel ie the length of the red triangle

CG height above roll axis

- By similar triangles therefore:

$$\frac{143}{2351} = \frac{Z}{1255}$$

- Giving Z = 76 mm Where Z is the height of the triangle at the position of the CG
- The height of the CG above the ground H' is 340mm
- This give a value of

$$H = 340 - (76+95) = 169\text{mm}$$