Trading, the Longboat, and Cultural Interaction in the Aegean During the Late Fourth Millennium B.C.E.: The View from Kephala Petras, East Crete
Author(s): Yiannis Papadatos and Peter Tomkins
Source: *American Journal of Archaeology*, Vol. 117, No. 3 (July 2013), pp. 353-381
Published by: Archaeological Institute of America
Stable URL: http://www.jstor.org/stable/10.3764/aja.117.3.0353
Accessed: 02-03-2017 14:56 UTC

REFERENCES
Linked references are available on JSTOR for this article:
http://www.jstor.org/stable/10.3764/aja.117.3.0353?seq=1&cid=pdf-reference#references_tab_contents
You may need to log in to JSTOR to access the linked references.

JSTOR is a not-for-profit service that helps scholars, researchers, and students discover, use, and build upon a wide range of content in a trusted digital archive. We use information technology and tools to increase productivity and facilitate new forms of scholarship. For more information about JSTOR, please contact support@jstor.org.

Your use of the JSTOR archive indicates your acceptance of the Terms & Conditions of Use, available at http://about.jstor.org/terms

Archaeological Institute of America is collaborating with JSTOR to digitize, preserve and extend access to *American Journal of Archaeology*

This content downloaded from 194.80.178.1 on Thu, 02 Mar 2017 14:56:13 UTC
All use subject to http://about.jstor.org/terms

Trading, the Longboat, and Cultural Interaction in the Aegean During the Late Fourth Millennium B.C.E.: The View from Kephala Petras, East Crete

YIANNIS PAPADATOS AND PETER TOMKINS

Abstract

Currently, long-distance trading, gateway communities, and the longboat are understood to have emerged in the Aegean during Early Bronze (EB) IB/IIA. This longboat-trading model envisages an essentially static configuration of trading communities situated at nodal points in maritime networks of interaction, an arrangement that was brought to an end, by the beginning of EB III, with the introduction of the masted sailing ship. This article questions this EB IB/IIA emergence date and argues instead that trading, gateway communities, and the longboat have a deeper and more dynamic history stretching back at least as far as the end of the Neolithic (Final Neolithic [FN] IV). The results of recent excavations at the FN IV–Early Minoan (EM) IA coastal site of Kephala Petras in east Crete paint a picture of an early trading community that, thanks to its close Cycladic connections, enjoyed preferential access to valued raw materials, to the technologies for their transformation, and to finished objects. This monopoly over the resource of distance was in turn exploited locally and regionally in east Crete, as a social strategy, to construct advantageous relationships with other communities. FN IV–EM IA Kephala Petras thus appears to represent the earliest known of a series of Early Bronze Age gateway communities (e.g., Hagia Photia, Mochlos, Poros-Katsambas) operating along the north coast of Crete.*

INTRODUCTION: THE LONGBOAT-TRADING MODEL

For at least four decades, the practice of long-distance trading, the existence of gateway communities,[1] and the use of the longboat have been seen as closely connected phenomena, which emerged more or less simultaneously in the Aegean by Early Bronze (EB) II.[2] In *The Emergence of Civilisation,* Renfrew drew attention to the distribution of a series of common EB II forms (e.g., midrib daggers, tweezers, one-handled cups, sauceboats, stone figurines, and vessels) and practices within a large area encompassing the islands and mainland borders of the Aegean.[3] Emphasizing a greater intensity of interaction in EB II than had been obtained previously—encapsulated by his notion of a new "international spirit"[4]—he argued that this EB II Aegean koine testified to the emergence of trade.[5] Trade, Renfrew noted, differed most obviously from gift exchange in cases where the exchange was primarily motivated by a desire to acquire the specific commodities being exchanged and not by the social relationship that the transaction created.[6] More generally, he saw this increased desire to acquire specific commodities as a new characteristic of Bronze Age societies, driven by emergent processes of competition and emulation that typify his "Acquisitive Society."[7] Analytically, he placed particular emphasis on the role of specialized middlemen and the ways in which their intervention created strikingly different and thus diagnostic patterns in the production, circulation, and consumption of objects. Following Renfrew, one

* We would like to thank the director of the Petras excavations, Metaxia Tsipopoulou, for permission to study and publish the material from Petras Kephala. We also thank the Greek Archaeological Service; the 24th Ephoreia of Prehistoric and Classical Antiquities and its director, Vily Apostolakou; the Palaikastro excavation team, notably Hugh Sackett; and the Institute for Aegean Prehistory (INSTAP) Study Center for East Crete and its director, Tom Brogan, who provided facilities for studying the material. For discussion and comments on the article, we thank Krzystof Nowicki, Cesare D'Annibale, Eleni Nodarou, Yiannis Iliopoulos, David Wilson, and Metaxia Tsipopoulou. The conservation of the vases was carried out by Michel Roggenbucke and Kathy Hall, and the drawings by Doug Faulmann and Kalliope Theodoropoulou. The research for this article formed part of the project "Study and Publication of the FN–EM I Settlement at Kephala Petras, Siteia," funded by the University of Athens and INSTAP. Figures are by Papadatos unless otherwise noted.

[1] For a definition, see Branigan 1991, 103–4.

[2] Renfrew 1972; Day et al. 1998; Broodbank 2000a.

[3] Renfrew 1972, 451–55.

[4] I.e., an "'international spirit" in which "forms and conventions in one region were very much more readily adapted in the others" (Renfrew 1972, 444, 451).

[5] I.e., "professional" or "freelance commercial" trade (Renfrew 1972, 440, 468–72).

[6] Renfrew 1972, 463.

[7] Renfrew 1972, 496–97.

This content downloaded from 194.80.178.1 on Thu, 02 Mar 2017 14:56:13 UTC
All use subject to http://about.jstor.org/terms

might thus define Early Bronze Age trading as the establishment of long-distance exchange relationships to secure privileged access to high-value raw materials, objects, and practices (technologies, consumption) and the exploitation of their distribution as a means of negotiating power.[8]

For Renfrew, the emergence of trading in EB II initiated a watershed moment in long-term socioeconomic development that linked and transformed the "hitherto essentially independent cultures in different regions of the Aegean into a complex of related units, whose individuality although at first distinct became gradually less marked as the bronze age continued." He isolated two factors as critical to this emergence: the invention of the longboat, which enabled an increase in the range of sea travel over that possible in the Neolithic, and the desire for metal, which represented "for the first time . . . a commodity worth trading" and which "must very rapidly have been seen as a necessity" for weapons, tools, and body ornaments. A third factor, less foregrounded in his discussion, was the greater ecological heterogeneity and unpredictability of the Aegean Islands, which encouraged islanders to take up trading as a means of relocating surplus output or supply (e.g., agricultural, mineral) to where it was in demand.[9] For Renfrew, at least, it was the Aegean islanders who were the agents behind the emergence of trading in EB II, and he envisaged widespread participation in trading activity in the islands.

More recent approaches have focused more specifically on the social mechanisms behind EB II trading. Broodbank's modeling of the conditions in which Aegean longboat trading would have operated has led to several important insights.[10] Notably, the minimum size of the longboats represented in EB II iconography imposes a demographic threshold to participation in longboat trading that only the largest communities in the islands could be expected to meet. Thus, EB II trading was not Renfrew's free-for-all but a highly restricted practice controlled by specific trading centers and implemented with the longboat, which served both as a war canoe and a deterrent. Broodbank's modeling of networks of longboat-assisted movement within the Aegean Islands has provided further support for this, revealing that the larger Cycladic trading communities were positioned to control and exploit nodal points where multiple pathways converged. Studies of assemblages from these larger EB II sites, particularly their cemeteries, have drawn attention to the ways in which their inhabitants sought to manipulate value in artifacts and people to differentiate themselves from others.[11] A close association has been noted between the forms and practices that define the reach of an "international spirit," the human body, and notions of identity and personhood.[12] It has been suggested that maritime skill, trading success, and prowess in combat, particularly the sort of hand-to-hand skirmishing that might have been launched from a longboat, be seen as linked components in the achievement of high social power in the islands.[13] It has also been argued that the agencies behind EB II trading were not restricted to the Aegean Islands but also encompassed the coastal peripheries of the Aegean.[14]

The temporal parameters of the longboat-trading model have also shifted slightly back. Thus, the origins of a new maritime ideology associated with EB II trading communities are now generally thought to lie in the late EB I Kampos Group horizon in the Cyclades.[15] The presence of imported Kampos Group material in late EB I funerary contexts in Crete together with local emulation of Cycladic Kampos Group forms and practices seems to represent an international spirit every bit as strong as that of EB II.[16] Similarly, the beginning of EB II *Metallschock* has now been pushed back into EB IB.[17] Also widely accepted is the prominent role of Early Minoan gateway communities in Crete, such as Early Minoan (EM) IB Hagia Photia, EM IB–IIA Poros-Katsambas, and EM II Mochlos, in trading activity and in mediating access more generally to off-island ideas, technologies, objects, and practices.[18]

As regards a still deeper history of longboat deployment and trading, Broodbank has noted that longboats "should have been technologically feasible at least from the FN [Final Neolithic], when metal tools are first attested, if not earlier in the Neolithic." However, while this possibility is scrupulously left open, Broodbank's discussion generally follows Renfrew's lead in assuming that "longboats were part of a wider cultural transformation of seafaring activity" that took place "around the transition to EB II" and came to an

[8] E.g., Tomkins 2010.

[9] Renfrew 1972, 34, 451–55, 475; Manning 1994, 229.

[10] Broodbank 1989; 1993; 2000a, 256–58.

[11] Broodbank 2000a, 247, 262–72; Papadatos 2007a; Carter 2008b.

[12] Carter 1998, 73–4; 2008a; Broodbank 2000a, 247–56; Catapoti 2011.

[13] Broodbank 2000a, 247–49; Sherratt 2000.

[14] Papadatos 2007a.

[15] Carter 1998; Broodbank 2000a, 247–56, 300–4.

[16] Day et al. 1998; Galanaki 2006.

[17] Doonan et al. 2007.

[18] Branigan 1991; Dimopoulou-Rethemiotaki et al. 2007; Wilson et al. 2008.

This content downloaded from 194.80.178.1 on Thu, 02 Mar 2017 14:56:13 UTC
All use subject to http://about.jstor.org/terms

end around the beginning of EB III with the appearance of the masted sailing ship.[19] And so the longboat-trading model, as currently conceived, describes an essentially static depiction of trading and power in the Aegean during EB II, with an origin and an end point located somewhere in the transitions on either side.

ISSUES OF IDENTIFICATION AND INTERPRETATION

Given the strength of this orthodoxy regarding the timing of the emergence of the longboat and trading in the Aegean, it is worth reflecting on its empirical basis. In the case of the longboat, iconographic depictions, although informing us of the existence of such a craft, are poor indicators of its distribution in time and space. Most two-dimensional depictions (of certain authenticity) from the EB II period in the Cycladic Islands come from just one site, Chalandriani (fig. 1, right).[20] In addition, several three-dimensional models are known, including some ceramic examples from EM II Crete (e.g., Mochlos, Palaikastro)[21] and a group of lead examples of more uncertain authenticity.[22] It would seem, therefore, that most EB IB–II trading communities chose not to depict the craft, at least in durable media, even though it was fundamental to their power and prosperity.

While this assumption seems inherently reasonable, to make it for EB IB–II but not for earlier periods is to risk a charge of inconsistency. The data at our disposal are not of equal quantity and quality, thanks not just to taphonomic and research biases but also to actual variation in past practices. Differences in depositional practice have, for example, conspired to create an impression of abundance (e.g., EB II *Metallschock*) or absence, which more detailed contextual study reveals to be at least partially artificial.[23] In the case of longboat iconography, the risks involved in over- or underinterpreting the absences in the incomplete and often poorly understood Final Neolithic–EB I data set are well illustrated by the recent discovery of depictions of longboats in rock art of late Final Neolithic date from the fortified coastal settlement of Strophilas on Andros (see fig. 1, left).[24] More ambiguous are rare ceramic boat models in later Neolithic–EB I contexts, such as those from Ftelia on Mykonos and Thermi on Lesbos.[25]

Likewise, while Broodbank's crucial insight—that access to the longboat and thereby trading was

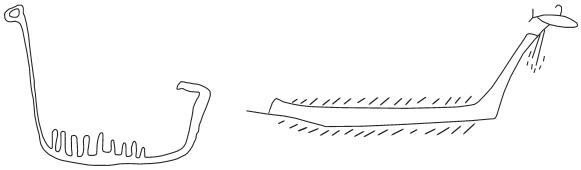

Fig. 1. Representations of longboats: *left*, Final Neolithic (FN) IV Strophilas (after Petrakos 2010, fig. 62; courtesy V. Petrakos); *right*, Early Cycladic (EC) II Chalandriani (after Coleman 1985, fig. 5.18).

restricted to the larger EB II communities[26]—is critical to a reconstruction of EB II trading, site size itself is not a determinative criterion; it demonstrates only the demographic potential of a community for EB II–style longboat-enabled trading. Technically, the largest Late Neolithic (e.g., Saliagos) and Final Neolithic (e.g., Strophilas) island communities could also have met this demographic threshold. Moreover, given that accurate size estimates for EB II island sites are rare and those for Final Neolithic and EB I sites are rarer still, it is open to question whether we have a sufficiently complete data set to pursue this line of inquiry systematically for the periods prior to EB II.

More fundamental to an empirically cogent exploration of early Aegean trading activity are artifact assemblages that have been fully characterized, provenanced, and quantified.[27] If the essence of trading is the strategic control of the distribution, transformation, and demand of commodities, then by tracing in detail the movement, transformation, and consumption of raw materials, objects, and practices, we should be able to build a more complete picture of trading, especially if we broaden our gaze to include not just trading sites but also other communities in their vicinity. Obsidian represents an obvious success story combining high recognition and recovery rates with assemblages small and distinctive enough to afford detailed characterization and provenancing. Ceramics, through their ubiquity, durability, and intrinsic attribute richness, hold still greater potential. However, comprehensive, integrated characterizations of ceramic assemblages from Neolithic coastal sites remain a rarity, with the focus having hitherto fallen on EB IB–II or later assemblages.[28]

[19] Broodbank 2000a, 247, 251, 256–58.

[20] Coleman 1985, 198; Marangou 1996; Broodbank 2000a, 212–16.

[21] Johnston 1985, 7; Soles 2004, 5.

[22] Sherratt 2000, 100–9.

[23] Nakou 1995, 2007.

[24] Televantou 2008; Liritzis 2010.

[25] Marangou 1996, figs. 4–7; Sampson 2002, pls. 23.3, 23.4.

[26] Supra n. 19.

[27] E.g., Renfrew 1972, 440–41, 465–71.

[28] Broodbank 2000b; Wilson et al. 2004, 2008; Vaughan 2006; Dimopoulou-Rethemiotaki et al. 2007.

This content downloaded from 194.80.178.1 on Thu, 02 Mar 2017 14:56:13 UTC
All use subject to http://about.jstor.org/terms

And so, the criteria that currently most influence whether trading is recognized as present (i.e., EB II) or absent (i.e., Final Neolithic or early EB I) in the Aegean are actually weak indicators potentially open to a host of depositional, preservation, and research biases. Consequently, while it is tempting to assume that longboat trading emerged suddenly and fully formed late in EB I, we cannot exclude the possibility that trading cultures and the use of large, fast canoes, whether EB II–style longboats or simpler, smaller predecessors, had a deeper and more dynamic history of development in the Aegean. Certainly, there are Neolithic communities large enough; there is now even iconographic evidence from Strophilas to suggest that a craft resembling the longboat was in use by the end of the Final Neolithic (see fig. 1); but what is urgently needed are detailed, analytically supported characterizations of Final Neolithic and EB IA artifactual assemblages from sites in coastal and coast-proximate locations.

KEPHALA PETRAS: INSIDE A LATE FINAL NEOLITHIC–EARLY EB I COASTAL COMMUNITY

During 2002–2004, test excavations conducted by the Hellenic Ministry of Culture (24th Ephoreia of Prehistoric and Classical Antiquities) on the Kephala Hill at Petras, east Crete, brought to light the stratified remains of a late Final Neolithic–early EB I coastal settlement.[29] The hill (fig. 2), which in the prehistoric period had the form of a coastal promontory, lies 1.5 km east of the modern town of Siteia and 200 m northeast of the later Minoan palace and settlement.[30] The hill enjoys a strategic location with visual control over an extensive land- and seascape,[31] encompassing to the west the large agricultural catchment around the mouth of the Pandelis River, to the south and east the valleys, low hills, and steep slopes leading south up to the tablelands of the Siteian interior, and to the north the wide expanse of the Siteia Bay.

Although the excavations covered a relatively small area on the north slope of the hill, surface survey has documented a substantially larger spread of Final Neolithic and EM I pottery over the north, south, and east slopes.[32] The excavated building remains (fig. 3) belong to at least three architectural phases.[33] The earliest is associated with pottery, which finds close parallels in Final Neolithic (FN) IV assemblages on Crete and thus dates to the final phase of the Neolithic (ca. 3300–3100/3000 B.C.E.).[34] The two subsequent architectural phases are both associated with EM IA pottery, most of which finds close parallels in early EM I assemblages on Crete and thus dates to the earliest phase of the Bronze Age (ca. 3100/3000–2900/2800).[35] In addition, a few small fragments of FN I–III pottery were identified as minor components in some mixed deposits,[36] indicating depositional activity on the hill prior to FN IV.

THE FN IV POTTERY

Considerable quantities of FN IV pottery were found inside a two-roomed structure, termed the Neolithic building, at the northwest edge of the excavated area, as well as in the open area surrounding it (see fig. 3). Smaller quantities also occurred in mixed deposits within or beneath the later (EM IA) building complex. Ceramic study pursued a totally integrated approach to the characterization of variation, following a methodology first developed for the Knossos Neolithic pottery and since applied to other Cretan Neolithic assemblages.[37] The methodology, known as "total integrated characterization," seeks to characterize the full range of practices in which pottery is implicated and demands complete integration of macroscopic and lab-based data sets, such that the relations between them can be clearly and comprehensively traced.[38] As with previous work, fabric served as the lead variable to which all others (e.g., form, surface treatment, use-wear, taphonomy) were related, and a "visual continuum" of macroscopic, petrographic, and scanning electron microscope characterization techniques were deployed.[39]

Although all contexts containing Neolithic pottery were studied, comprehensive quantification, where all sherds in a context were assigned to a specific petrographic fabric group, was conducted only for the well-stratified and unmixed FN IV deposits associated with the Neolithic building. This work resulted in the identification of a series of different fabrics (and associated traditions of production), which group more broadly

[29] Papadatos 2008, 2012a.

[30] Tsipopoulou 1999, 2002.

[31] Tomkins et al. 2004b.

[32] Tsipopoulou 1990, 321; Nowicki 2002, 28; Papadatos 2008, 263.

[33] Papadatos 2008, 263–64, fig. 15.3.

[34] For a definition of the FN IV phase, see Tomkins 2007, 41–4; see also Todaro and Di Tonto 2008.

[35] For early EM I assemblages on Crete, see Todaro 2005; Tomkins 2007, 44–8; Papadatos et al. (forthcoming).

[36] For a definition of the FN I–III phases, see Tomkins 2007, 32–41.

[37] Tomkins 2001; Tomkins and Day 2001; Tomkins et al. 2004a.

[38] For further discussion of this approach and methodology, see Tomkins (forthcoming).

[39] Quotation from Tomkins (forthcoming); see also Wilson and Day 1994, 54.

This content downloaded from 194.80.178.1 on Thu, 02 Mar 2017 14:56:13 UTC
All use subject to http://about.jstor.org/terms

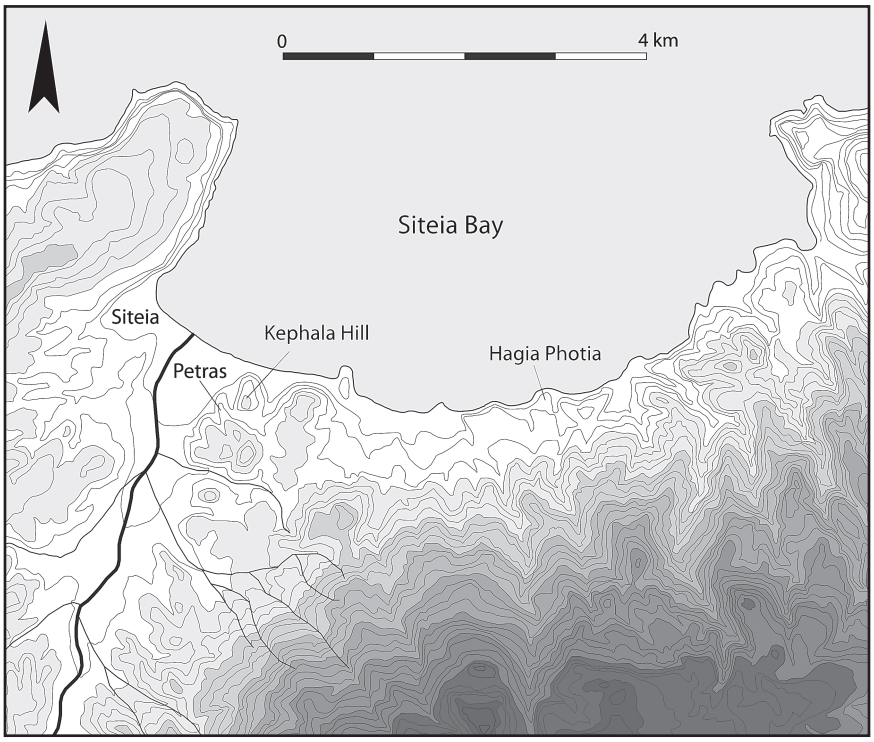

Fig. 2. Map of the Siteia area, showing the Kephala Petras settlement and its environs.

into three main categories: Local Grog, Cretan Imported, and Off-Island Imported.

Local Grog Fabric Group

Most of the FN IV pottery (ca. 80% of the assemblage from the Neolithic building) belongs to a single fabric group characterized by a noncalcareous clay matrix tempered with grog (i.e., fragments of crushed pottery). The mineralogy of this fabric is compatible with a local provenance, and this, together with its high frequency, strongly suggests that it represents local, probably on-site, ceramic production. Vessels in this fabric may be burnished (generally the larger, thicker-walled vessels) or polished (generally the smaller, thinner-walled vessels). Most bowl (fig. 4a, d, e) and jar (see fig. 4b, c) forms in this fabric find close parallels in FN IV assemblages from inland sites in east and central Crete, such as Knossos, Phaistos, and the Kastelli Phournis well.[40] At Knossos and Phaistos, the presence of earlier Final Neolithic phases of ceramic production makes it clear that the forms and surface treatments that define FN IV at these inland sites developed within an existing, indigenous tradition of ceramic production, albeit one that was clearly open to some outside influences. Therefore, it may be concluded that most local (probably on-site) production at FN IV Kephala Petras is situated firmly within an existing Cretan container tradition, as is manifest at inland sites such as Knossos and Phaistos in central Crete.

However, that still leaves a small minority of forms and decoration in the Local Grog fabric that lack not only close contemporary parallels in other Cretan FN IV assemblages but also a prior history of development on the island. This typologically non-Cretan subgroup of the Local Grog fabric includes the biconical jar (fig. 5a, b), the so-called cheesepot (see fig. 5c), an unusual type of horned and/or vertically grooved handle (see fig. 5d, e), the hole-mouthed jar with crescentic lug or vertically pierced tubular lug (see fig. 5f, g), some unusual types of plastic decoration (see fig. 5h), and the bowl with horizontally pierced tubular lug (with or without low pedestal) (see fig. 5i). The only one of these non-Cretan types that is at all common at Kephala Petras is the cheesepot, the complete form of which

[40] For the fabric, see Nodarou 2012, 82–3. For detailed parallels, see Papadatos et al. (forthcoming).

This content downloaded from 194.80.178.1 on Thu, 02 Mar 2017 14:56:13 UTC
All use subject to http://about.jstor.org/terms

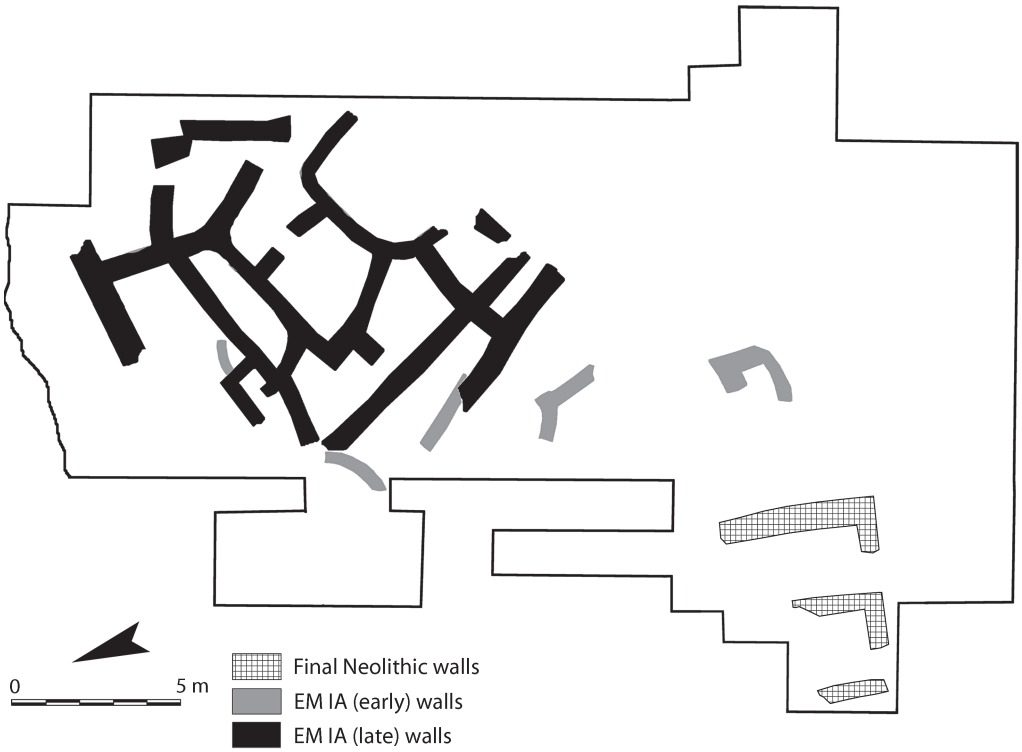

Fig. 3. Plan of the Kephala Petras settlement.

is unclear. Only present in fragments, some large, this appears to be an open, low-sided receptacle with a row of irregularly spaced holes pierced just below the rim and a flattened base, the underside of which exhibits impressions from the irregular surface on which it was formed. Despite their frequency at Kephala Petras (and other coastal sites, such as Nerokourou in west Crete),[41] the non-Cretan character of cheesepots is evidenced both by their deeper history of use in regions beyond Crete and by their absence or near absence from Knossos, Phaistos, and other inland FN IV sites.[42] At Knossos, only two examples, both in imported fabrics, are known, and the type is equally rare at Phaistos and Gortyn.[43] Further parallels for these non-Cretan types of form and decoration (i.e., the Off-Island Imported Group) are discussed below.

Cretan Imported Group

The remainder (ca. 20%) of the FN IV assemblage comprises a series of distinctly different fabrics, which exhibit a diverse range of mineralogies that are generally incompatible with a local provenance. Broadly speaking, this imported pottery may be divided into two subgroups. A first, amounting to about half of the imported pottery (ca. 10% of the total FN IV assemblage from the Neolithic building), comprises a series of rare fabrics, the mineralogy of which is broadly compatible with a Cretan provenance. All vessel forms in fabrics assigned to this Cretan Imported Group find close parallels in FN IV assemblages from inland sites in east and central Crete and in the Local Grog fabric. Thus, approximately half of the imported FN IV pottery at Kephala Petras seems to derive from other communities in Crete.

Off-Island Imported Group (White Mica Schist Fabrics)

The second subgroup, amounting to about half of the imported pottery (ca. 10% of the total FN IV assemblage from the Neolithic building), comprises a series of fabrics, which are linked mineralogically by the presence of varying proportions of white mica schist and typologically by an absence of close parallels at

[41] Vagnetti et al. 1989, figs. 18.42, 18.43, 23.102–5, 27.154, 27.155, 37–40; Nowicki 2002, 54–9.

[42] Tomkins 2007, 46; Sotirakopoulou 2008, 123–24.

[43] Pernier 1935, 98, fig. 41; Vagnetti 1973, fig. 2.4; Tomkins 2007, 44, figs. 1.15.2, 1.15.3.

This content downloaded from 194.80.178.1 on Thu, 02 Mar 2017 14:56:13 UTC
All use subject to http://about.jstor.org/terms

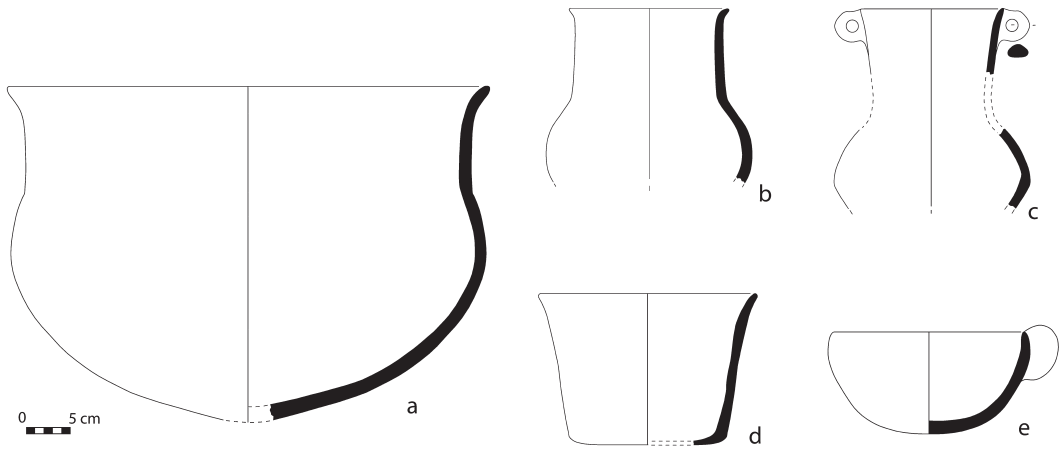

Fig. 4. FN IV Cretan-style vessels made in the Local Grog fabric: *a, d, e,* bowls; *b, c,* jars.

inland Cretan Final Neolithic sites. None of these mica schist fabrics finds convincing mineralogical parallels on Crete, but all are broadly compatible with the schist-dominated geology of the Hellenic arc (e.g., Naxos, Amorgos, Ios, Seriphos, Siphnos, Kythnos, Kea, Attica-Laurion).[44] Within this region, mica schist fabrics are a noted feature of late Final Neolithic ceramic assemblages, such as Kephala and Hagia Irini on Kea[45] and Akrotiri on Thera,[46] and those of EB I–II date, such as Akrotiri on Thera, Phylakopi on Melos, Markiani on Amorgos, and Daskaleio-Kavos on Keros.[47] In the Dodecanese, where little detailed fabric characterization has been done, micaceous fabrics are reported from Leros, Rhodes, and Kos;[48] such fabrics are considered nonlocal on Chios and, more significantly, on Karpathos and Kasos, the islands most proximate to Kephala Petras.[49]

Regarding typology, there are some distinctive recurring types. These include the cheesepot (fig. 6a, b), the bowl with flared rim (see fig. 6c), the collared jar with narrow body (see fig. 6d), the hole-mouthed jar (with crescentic lug) (see fig. 6e), the biconical jar (with horned, grooved handle) (see fig. 6f), and examples of pellet or cordon decoration (see fig. 6g, h). Unfortunately, comparative typological analysis is hampered by a scarcity of detailed publications of Aegean Final Neolithic ceramic assemblages, by a lack of clarity regarding the definition of regional subphases of the Final Neolithic and EB I, and by the near absence

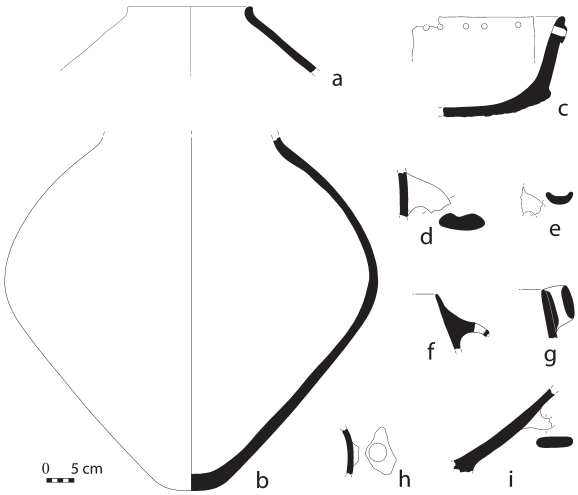

Fig. 5. FN IV non-Cretan-style vessels made in the Local Grog fabric: *a, b,* biconical jars; *c,* cheesepot; *d, e,* horned and grooved handles; *f, g,* hole-mouthed jars; *h,* plastic decoration; *i,* bowl with tubular lug.

[44] For the fabric, see Nodarou 2012, 83–4. For off-Cretan parallels, see Hilditch 2007, 239.

[45] Coleman 1977, 9; Wilson 1999, 9.

[46] S. Kariotis, pers. comm. 2009.

[47] Vaughan 1990, 476–78; 2006, 99–100; 2007, 118; Hilditch 2007, 239, 242–43; S. Kariotis, pers. comm. 2009. For white mica schists in Attica, see Farnsworth 1964, 222–23.

[48] Sampson 1987, 88, 96–105; Georgiadis 2005–2006; M. Georgiadis, pers. comm. 2010.

[49] For Chios, see Hood 1981, 167. For Karpathos and Kasos, see Melas 1985, 84.

This content downloaded from 194.80.178.1 on Thu, 02 Mar 2017 14:56:13 UTC
All use subject to http://about.jstor.org/terms

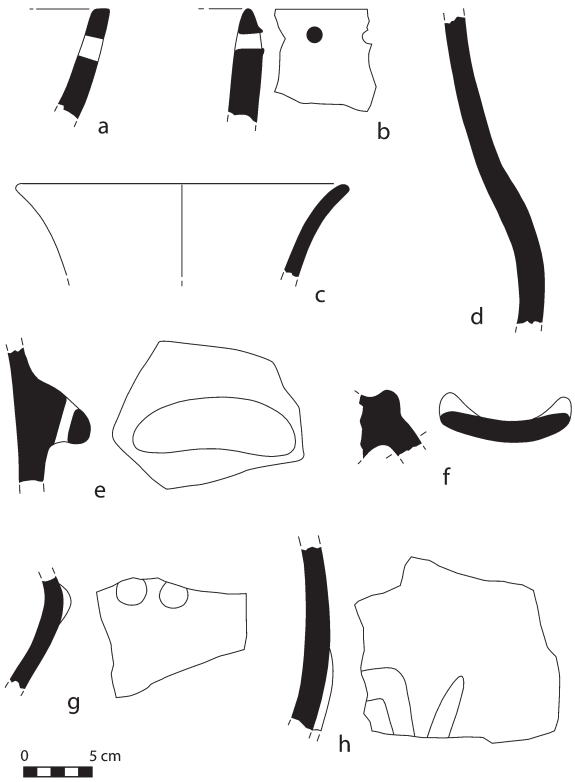

Fig. 6. FN IV non-Cretan-style vessels made in the White Mica Schist Group fabric: *a, b*, cheesepots; *c*, bowl with flared rim; *d*, collared jar; *e*, crescentic lug from a hole-mouthed jar; *f*, horned and grooved handle; *g, h*, plastic decoration.

of technological characterization work. The pool of comparative typological material is thus relatively small, is skewed by research biases, generally lacks accompanying provenance data, and may well not be contemporaneous with FN IV Kephala Petras. What is clear, however, is that all of these non-Cretan types find close parallels in late Final Neolithic Aegean assemblages beyond Crete and support the off-island provenance of the White Mica Schist Group. Moreover, they also find close parallels among the minority, non-Cretan subgroup produced in the Local Grog fabric. Indeed, so close is this typological similarity that it is hard to escape the conclusion that the White Mica Schist Group (and the set of contacts that it represents) provided the ultimate source of inspiration for local experimentation with, and adoption of, new, "foreign" container forms in FN IV. This in turn suggests we might usefully incorporate the typological data from the non-Cretan subgroup of the Local Grog fabric into an assessment of the provenance of the White Mica Schist Group.

Cheesepot. Cheesepots have a wide distribution at late Final Neolithic coastal sites in the Aegean.[50] It has been claimed that at some sites they enjoyed a longer history of use stretching back to the Late Neolithic (e.g., Emporio)[51] and that at others their use continued as late as EB I (e.g., Akrotiri).[52] Examples with ledge lugs inside the rim are particularly common in the southern Dodecanese and at the west Cretan coastal site of Nerokourou.[53] At Kephala Petras, however, cheesepots with internal ledge lugs are as good as absent (n=1), as they are at late Final Neolithic island sites (e.g., Kephala and Hagia Irini on Kea, Emporio phase VI on Chios).[54]

Biconical Jar (with Horned, Grooved Handle). This form is rare at Kephala Petras and is known almost exclusively from small fragments, the exception being a single, near-complete specimen in the Local Grog fabric (see fig. 5b). Numerous parallels for the biconical form occur at sites beyond Crete, most notably at Kephala and Hagia Irini on Kea[55] and at Koumelo on Rhodes.[56] Some of the Kean examples have a distinctive type of vertically grooved handle, sometimes with a double "horn" at the upper point of attachment.[57] Fragments of similarly grooved and horned handles have also been found at Kephala Petras in white mica schist fabrics (see fig. 6f) and more rarely in the Local Grog fabric (see fig. 5d, e). It seems reasonable to conclude that these handles, like the Kean examples, originally belonged to biconical jars.

Hole-Mouthed Jar (with Crescentic Lug). The hole-mouthed jar is extremely rare in the FN IV assemblage, with only two or three clear fragments in the Local Grog fabric (see fig. 5f, g) and one in a white mica schist fabric (see fig. 6e). Although the general form is paralleled in other FN IV assemblages (most notably Nerokourou),[58] the Kephala Petras specimens are unusual in having a vertically pierced lug (tubular or crescentic) attached just below the rim, a characteristic that finds its best parallels at sites in the Cyclades (e.g.,

[50] For a list of parallels, see Sotirakopoulou 2008, 123–24.

[51] Sampson 2002, 156–57.

[52] Kariotis (forthcoming).

[53] Sampson 1987, pls. 127, 129; Vagnetti et al. 1989, figs. 18.42, 18.43, 23.102–5, 27.154, 27.155.

[54] Caskey 1972, 359, pl. 76; Hood 1981, 309; Wilson 1999, pls. 41.1.94–7, 42.1.98–112. See also Renfrew (1972, 141, figs. 10.1, 10.2) for Grotta on Naxos and Phylakopi on Melos.

[55] Coleman 1977, pl. 43.105; Wilson 1999, pls. 5.1.177, 5.1.178, 5.1.201.

[56] Sampson 1987, pls. 127, 129.

[57] Coleman 1977, pls. 38.B, 79.170, 84.BA; Wilson 1999, pl. 41.1.62. Examples are also found at Tharrounia (Sampson 1993, fig. 105).

[58] Vagnetti et al. 1989, fig. 20.75.

This content downloaded from 194.80.178.1 on Thu, 02 Mar 2017 14:56:13 UTC
All use subject to http://about.jstor.org/terms

Kephala, Hagia Irini phase I), Attica (e.g., Kitsos Cave), and the Dodecanese (e.g., Koumelo, Alimnia).[59]

Bowl with Horizontal Tubular Lug (with or without Low Pedestal). The bowl with a horizontal tubular lug and occasionally with a low pedestal is also rare and known only in the Local Grog fabric (see fig. 5i). Although hemispherical bowls are generally common in FN IV Cretan assemblages, notably Nerokourou, the practice of adding a horizontally pierced tubular lug and/or a low pedestal is highly unusual and finds its best parallels beyond Crete, at Kephala and Hagia Irini phase I on Kea[60] and at Akrotiri on Thera.[61]

Collared Jar with Narrow Body. This form, also very rare at Kephala Petras, occurs only in white mica schist fabrics (see fig. 6d) and has good parallels at Hagia Irini phase I.[62] Although high-collared jars are typical of FN IV assemblages at inland Cretan sites, these typically have a wide, globular body.[63]

Plastic Decoration. Plastic decoration of any sort is extremely rare in the FN IV assemblage. A handful of impressed pellets and impressed cordons are known, mainly from the White Mica Schist Group (see fig. 6g), and these find close parallels at Kephala (Kea), the Kitsos Cave (Attica), Tharrounia (Euboea), and Aigeira (Gulf of Corinth).[64] Similarly, a single example of patterned cordon decoration in a white mica schist fabric (see fig. 6h) finds its closest parallels at Kephala and Hagia Irini phase I on Kea and in the Kitsos Cave.[65]

Summary

The mineralogical and typological data combine to suggest an off-island source (or sources) for the White Mica Schist Group. The closest, in some cases the only,[66] typological parallels for this and the non-Cretan Local Grog typological group cluster within the Attic-Kephala region, specifically the Laurion-Euboea-Kea area. Other less distinctive forms in the White Mica Schist Group, such as a dark polished bowl with flared rim (see fig. 6c; cf. Hagia Irini phase I), are also consistent with such a source,[67] as is the mineralogy of the White Mica Schist Group, although precise sampled parallels from this region are currently lacking. The consistent closeness of these similarities indicates a link between Kephala Petras in east Crete and the Attic-Kephala cultural region during the final phase of the Final Neolithic (i.e., FN IV).

THE EARLY MINOAN IA POTTERY

On the basis of macroscopic and microscopic characterization of technology and typology, we divide the EM IA pottery from Kephala Petras into three main groups: Local Grog, Cretan Imported, and Cycladic/Cycladicizing.[68] The frequency data presented below derive only from undisturbed deposits inside the EM IA building complex (see fig. 3). These proportions, however, resemble those from pure or mixed deposits from the open-air areas.

Local Grog Fabric

The EM IA pottery shows both continuities and discontinuities with FN IV in terms of fabric, firing, surface treatment, and form.[69] Almost the entire EM IA assemblage (ca. 98%) was locally made in essentially the same grog-tempered fabric as in FN IV, but with minor textural changes resulting from increased grog temper. While burnished ware and polished ware continued as general categories, there were by EM IA clearer consistencies in color and surface treatment, such that we can distinguish additional subcategories (i.e., Dark-Gray Burnished Ware, Orange-Buff Burnished Ware, Red Slipped Ware, Red Slipped and Polished Ware). This change arose from a deliberate effort to produce a more varied and distinctive range of ceramic wares, of which the most frequent, the Dark-Gray Burnished Ware, seems to have been influenced by a desire to copy sheet metal vessels. Metal skeuomorphism is detectable not just in the careful dark-gray lustrous finishing but also in the thin walls, fenestrations, carinated walls, and simulated rivets of Dark-Gray Burnished chalices and cups.

A wide range of ceramic forms were produced in the Local Grog fabric (fig. 7), from small cups and high-pedestaled chalices to medium-sized jars, cooking vessels, and even large storage pithoi. There appears

[59] For the Cyclades, see Coleman 1977, pls. 84.BO, 84.BP; Wilson 1999, pls. 2.1.20–33, 4.172, 5.174, 5.178, 5.197. For Attica, see Lambert 1981, fig. 222. For the Dodecanese, see Sampson 1987, 82, figs. 86.12, 91.65, 95 (first on third row), 107.79.

[60] Coleman 1977, pl. 28.104; Wilson 1999, pls. 2.1.12, 4.1.135, 4.1.139.

[61] S. Kariotis, pers. comm. 2009.

[62] Wilson 1999, pls. 3.1.35, 3.1.36, 3.1.175.

[63] E.g., Knossos (Evans 1928, fig. 3r).

[64] Coleman 1977, pl. 89.AF–AR; Lambert 1981, fig. 161; Sampson 1993, pl. 104; Alram-Stern 2006, tables 1.62, 5.190.

[65] Coleman 1977, pl. 46.B; Lambert 1981, 303, fig. 192; Wilson 1999, pls. 40.1.26, 40.1.47, 40.1.48.

[66] I.e., biconical jar with horned, grooved handle; bowl with horizontal lug and low pedestal.

[67] Wilson 1999, pls. 4.1.151, 4.1.155, 4.1.156, 4.1.163. For the original definition of the Attic-Kephala cultural group, see Renfrew 1972, 70, 75–8.

[68] For a detailed discussion on relative chronology, see Papadatos et al. (forthcoming).

[69] For a discussion, see Nodarou 2012, 82–3; Papadatos et al. (forthcoming).

This content downloaded from 194.80.178.1 on Thu, 02 Mar 2017 14:56:13 UTC
All use subject to http://about.jstor.org/terms

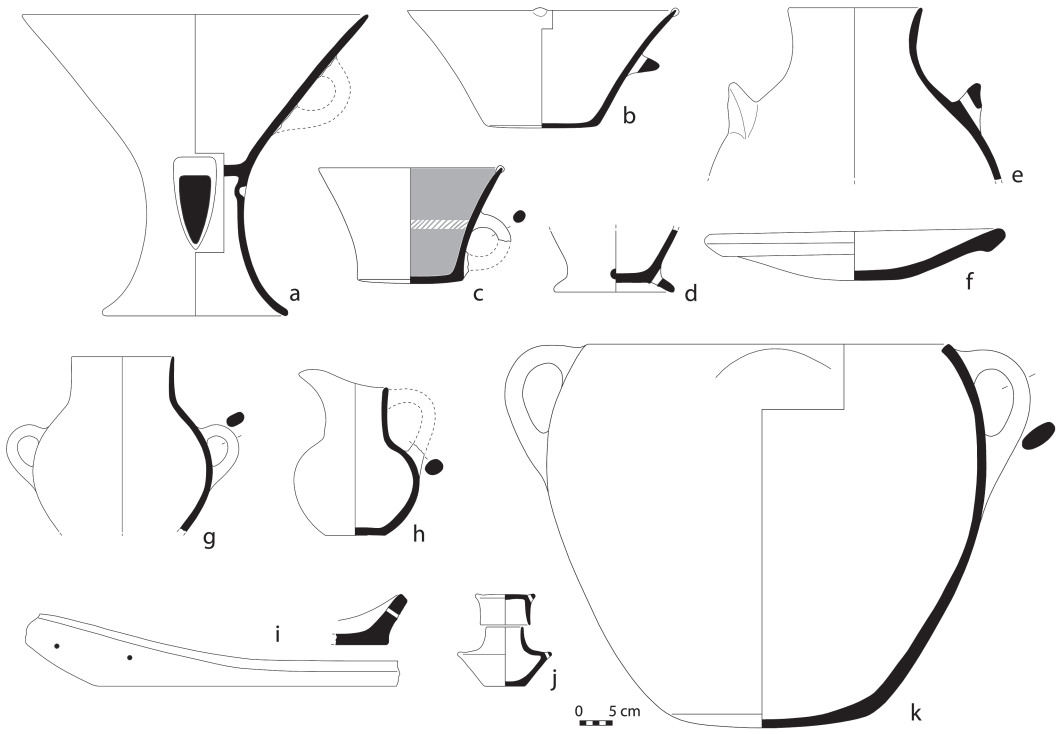

Fig. 7. Typical EM IA vessels made in the Local Grog fabric: *a*, chalice; *b–d*, cups and bowls; *e, g*, jars; *f*, plate; *h*, jug; *i*, baking plate; *j*, pyxis; *k*, hole-mouthed jar.

to be a strong correspondence between surface treatment (or ware) and vessel function, since burnished, polished, and slipped wares (Dark-Gray Burnished, Orange-Buff Burnished, Red Slipped, Red Slipped and Polished) were used for tableware forms, such as chalices (see fig. 7a), cups and bowls (see fig. 7b–d), small jars (see fig. 7e, g), serving plates (see fig. 7f), jugs (see fig. 7h), and pyxides (see fig. 7j), while Wiped and Washed Ware was used exclusively for cooking and medium-sized storage vessels—namely, baking plates (see fig. 7i) and hole-mouthed jars (see fig. 7k). Some FN IV forms disappeared, notably the S-profile bowl (see fig. 4a), but others continued into EM IA, such as the low-footed bowl, the low-carinated bowl (see fig. 4d), and the collared jar. EM IA also saw the appearance of new types, such as the suspension pyxis (see fig. 7j) and the pithos with patterned cordon decoration.[70] In the case of the EM IA jug (see fig. 7h), the appearance of which is conventionally taken to mark the beginning of the Early Bronze Age in the Aegean,[71] it should be noted that at Kephala Petras and other FN III and IV sites on Crete, stylistically different but functionally equivalent vessels with large V- or U-shaped spouts do occur.[72] In addition, there are new EM IA forms that can be linked back to FN IV types, albeit those that might be considered non-Cretan in inspiration. These include the EM IA baking plate (see fig. 7i) with holes beneath the rim, which echoes the FN IV cheesepot (see figs. 5, 6), and the EM IA hole-mouthed jar (see fig. 7k) with crescentic projections, which echoes rare examples of FN IV hole-mouthed jars with actual crescentic lug handles (see figs. 5f, 6e). The EM IA (fenestrated) chalice (see fig. 7a) may prove also to have a rare FN IV predecessor, as there are one or two possible fragments of such a vessel that seem FN IV in technology and thus date.

Cretan Imported Group

The remainder of the EM IA assemblage (ca. 2%) comprises a series of more rarely occurring fabrics, which can be considered imports. Although this marks a reduction in the proportion of imported pottery

[70] Papadatos 2008, fig. 15.6.d.
[71] Manning 1995.
[72] Tomkins 2007, 39; Todaro and Di Tonto 2008, 183, fig. 11.3.a.

This content downloaded from 194.80.178.1 on Thu, 02 Mar 2017 14:56:13 UTC
All use subject to http://about.jstor.org/terms

compared with FN IV, the actual quantities of imported ceramic material in our FN IV and EM IA samples are broadly comparable, with the difference resulting from a significant increase in the quantity of local pottery consumed (and probably produced) at Kephala Petras during EM IA. These imported fabrics may be divided into two subgroups. The first comprises pottery that finds its closest typological parallels in other EM IA assemblages in east and central Crete.[73] This Cretan Imported Group accounts for approximately 0.5% of the total EM IA assemblage and includes fabrics with calcite, grog, and/or metamorphic rocks—namely, quartzite and phyllite with some mica. The rarity of these fabrics suggests that they are imported, but it is difficult to provenance them precisely. A range of typical Cretan EM I wares (e.g., Wiped and Washed, Dark-Gray Burnished, Red-on-Buff Painted) and shapes (e.g., baking plate, hole-mouthed jar, fenestrated chalice, "tankard") are represented.

Cycladic/Cycladicizing Group (Calcite-Tempered Fabrics)

The second group of imported pottery (ca. 1.5% of the total EM IA assemblage) is characterized by vessels in calcite-tempered fabrics,[74] which find their closest typological parallels in EB I Cycladic or Cycladicizing pottery. The most common shape represented in the Imported Calcite-Tempered Group is the deep bowl (fig. 8a), sometimes with two vertically positioned tubular lugs below the rim. Similar vessels have been found in the nearby EM IB cemetery of Hagia Photia, where a significant proportion of the local pottery is Cycladicizing in both style (Kampos Group) and technology (calcite-tempered fabric).[75] In the Cyclades, however, this form has a deeper history of development, and similar vessels occur in both the early (Grotta-Pelos) and the late phase (Kampos) of the Early Cycladic (EC) I period.[76] Common also are the serving plate (see fig. 8b, c), a flat plate with a burnished or polished interior and a roughly finished base, and the shallow bowl with incurved rim (see fig. 8d). Once again, although good parallels can be found among Cycladic or Cycladicizing pottery in EM IB contexts at Poros-Katsambas,[77] the earliest Cycladic examples date to the early EC I phase.[78] Hole-mouthed jars with oval-sectioned or strap handles (see fig. 8g) also have good EC I parallels.[79] Finally, there is a single instance each of a jar with a horizontal, nonperforated crescentic lug (see fig. 8f) and a small collared-neck jar (see fig. 8e), both with close EB I Cycladic parallels, some in calcite-tempered fabrics.[80]

Nothing in the mineralogy of this calcite-tempered group points to a specific provenance. By EM I, Crete already had a long, complex history of calcite tempering stretching back to the beginning of the ceramic Neolithic.[81] In the Siteia region, a fabric with frequent calcite inclusions predominates in the LN I assemblage from Magasa. Calcite-tempered fabrics are also typical of EM I and II deposits from Palaikastro[82] and of FN IV/EM IA surface assemblages along the east Cretan littoral. On the Ierapetra Isthmus, calcite-tempered fabrics are known from Final Neolithic–EM II assemblages at Vrokastro and Kavousi.[83] At the EM IB cemeteries of Hagia Photia and Gournes and the coastal settlement of Poros-Katsambas, calcite-tempered fabrics were used for the production of the Cycladic/Cycladicizing pottery of the Kampos Group type.[84] At Kephala Petras, calcite-tempered fabrics are present among the small amount of residual FN I–III pottery and in the FN IV Neolithic building assemblage. Petrographic study of the Final Neolithic calcite-tempered fabrics, however, indicates that they are consistently different from the EM IA calcite-tempered fabrics, the latter differing most obviously in the greater size and increased density of the calcite inclusions.[85] In the current state of knowledge, a Cycladic source for this group seems a strong likelihood, although it cannot be excluded that some or all of it was produced on Crete, following a Cycladic tradition.[86]

Summary

The evidence from the local pottery does not indicate a clear break between FN IV and EM IA, as has been previously claimed,[87] but rather an evolution in technology and typology characterized by both continuity and change.[88] Continuity is most obviously apparent in the maintenance of essentially the same tradition of grog-tempered paste preparation for lo-

[73] For sites and references, see Tomkins 2007, table 1.6. See also Phaistos phase III (Todaro 2005).

[74] Nodarou 2012, 84–5.

[75] Day et al. 1998, 2012; Davaras and Betancourt 2004, figs. 75.39.6, 193.88.28.

[76] Karantzali 2006, 104, figs. 7.1.8, 7.1.9, 7.4.5, 7.4.6.

[77] Wilson et al. 2008, fig. 26.3.d.

[78] Karantzali 2006, 107, figs. 7.2.15, 7.2.16.

[79] Karantzali 2006, 104, figs. 7.1.10–13.

[80] Karantzali 2006, 104, 106, figs. 7.2.1–4, 7.2.6–8.

[81] Tomkins et al. 2004a; Tomkins 2007, 21–3.

[82] Sackett et al. 1965, 250, 277–78.

[83] Day et al. 2005, 180; Haggis et al. 2007, 679–701.

[84] Day et al. 1998, 2012; Wilson et al. 2004, 69; 2008, 262; Galanaki 2006.

[85] Nodarou 2012, 84–5.

[86] Wilson et al. 2008, 262.

[87] Hood 1990a, 1990b.

[88] For a more detailed discussion, see Papadatos et al. (forthcoming).

This content downloaded from 194.80.178.1 on Thu, 02 Mar 2017 14:56:13 UTC
All use subject to http://about.jstor.org/terms

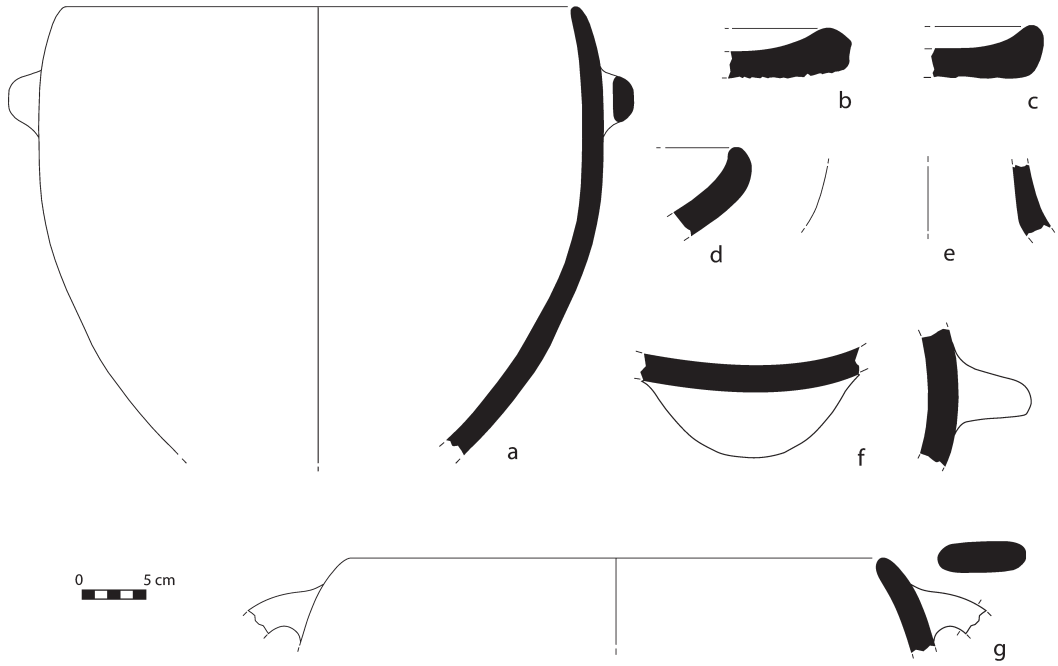

Fig. 8. EM IA vessels made in the Imported Calcite-Tempered Group fabric: *a*, deep bowl; *b*, *c*, serving plate; *d*, shallow bowl; *e*, collar-necked jar; *f*, crescentic lug; *g*, hole-mouthed jar.

cal pottery production, a continued preference for burnished or polished surface treatments, and the continued or increased popularity of several form types already present in FN IV (e.g., collared jar, low-carinated bowl, low-footed bowl). Clearly, however, the beginning of EM I also saw several important typological (e.g., new form types) and technological (e.g., new firing regimes) changes. These may have been partially connected to two sources of external influence, although their development seems to have been a largely Cretan phenomenon.

Cycladic/Cycladicizing Forms and Practices. Although the quantity of Cycladic or Cycladicizing pottery drops as a proportion of the total assemblage at Kephala Petras from approximately 10% in FN IV contexts to approximately 1.5% in EM IA ones, evidence shows that the selective influence of specific Cycladic prototypes on local pottery production and consumption continued in EM IA. Thanks to the existence of sequential FN IV and EM IA deposits at Kephala Petras, different moments in this process can be glimpsed, beginning with initial exposure and occasional local emulation/modification and ending, in some cases, with full local adoption. Cycladic influence is clearest in the case of forms or functional types that first became common in the Local Grog fabric in EM IA—namely, the baking plate, the fenestrated chalice, and the pithos, all of which have close parallels at late Final Neolithic or EC I Cycladic sites. Large pithoi, occasionally with cordon-patterned decoration, and baking plates with tiny holes beneath the rim have recently been identified at Akrotiri on Thera, where they have a deeper history stretching back into the Final Neolithic.[89] Similarly, at Hagia Irini phase I, chalices, various plates (including some very close to EM IA types from Kephala Petras), and possibly also pithoi were present by the end of the Final Neolithic (i.e., FN IV in Cretan terms).[90] At Akrotiri, there are fenestrated chalices, similar to those from Kephala Petras, in layers of EC IA (Grotta-Pelos) date. These three shapes constitute a significant proportion of the Kephala Petras EM IA assemblage and address the full functional range of container categories, from cooking to serving and storage.

A more fleeting Cycladic influence may be detected in the presence of miniature, stylized crescentic projections on the large hole-mouthed jars that replaced the FN IV deep/carinated bowl as the main ceramic cooking vessel. Although the EM IA hole-mouthed jar

[89] Kariotis (forthcoming).

[90] Wilson 1999, 14, pls. 3.1.112, 4.1.150–66.

This content downloaded from 194.80.178.1 on Thu, 02 Mar 2017 14:56:13 UTC
All use subject to http://about.jstor.org/terms

comprises elements with a distinctly Cretan heritage (e.g., oval-sectioned or strap handles), both the form and the crescentic projections clearly reference FN IV examples with real crescentic lugs that occur rarely in the Local Grog fabric and have close Attic-Kephala parallels. Furthermore, nonperforated crescentic lugs also occur on EC I hole-mouthed jars from Markiani on Amorgos.[91] In this case, the Cycladic reference is less pronounced because the process of exposure, local experimentation, and full adoption had already begun in FN IV and was largely complete by the time the EM IA assemblage was produced and deposited.

Based on present evidence, the EM IA pottery forms at Kephala Petras seem most clearly and closely connected with those at EC I sites in the southern Cyclades, such as Akrotiri on Thera and Markiani on Amorgos;[92] however, this may be a function of current research biases. Local emulation and adoption of Cycladic forms, combined with the rare presence of vessels that were probably imported from the Cyclades (i.e., deep bowls, serving plates, and hole-mouthed jars in calcite-tempered fabrics), would seem to suggest that the EM IA community at Kephala Petras maintained an especially close familiarity with Cycladic forms and practices.

Early EB I Metallschock. A second, and possibly related, typological influence on the EM IA pottery takes the form of a *Metallschock* caused by exposure to a series of new sheet metal container forms. Unlike EB II *Metallschock*, where examples of the original metal prototypes are directly available, the near absence of EB I sheet metal vessels means that their influence must be inferred indirectly on the basis of ceramic skeuomorphs.[93] Most obvious is the biconical fenestrated chalice (see fig. 7a), which owes its thin-walled, biconical form and fenestrated pedestal entirely to the logic of sheet metal container technology. At Kephala Petras, this Dark-Gray Burnished Ware form first appears in the EM IA ceramic assemblage, where it is common, and in several cases these ceramic examples render even the rivets of their metal prototypes (fig. 9). A desire to reference sheet metal vessels from the beginning of EM I is also detectable in the increased popularity, especially in fine wares, of the tubular handle (easily formed from sheet metal and typical of later Early Bronze Age metal vessels in the Aegean) and, more generally, in the decision to develop color-specific ware types, such as Dark-Gray Burnished Ware, which seemingly references silver or lead vessels.

Although the precise origins of these metal containers and their technology of production are unclear, there is no reason to consider them native to Crete. High-pedestaled, sometimes even fenestrated, chalices are a feature of the latest Final Neolithic and EB I ceramic assemblages at several Aegean island communities (e.g., Akrotiri, Hagia Irini phase I, Poliochni Black–Early Blue period);[94] it seems safer at this point to speak more generally of a shared Aegean (or "international") esteem for such vessels that began in some places before the end of the Final Neolithic but appeared for the first time on Crete at the beginning of EB I. It is worth noting that the closest parallels for the EM IA fenestrated chalices from Kephala Petras appear to lie not in the east Aegean (cf. Poliochni Early Blue period) but in the Cyclades (e.g., Akrotiri). In view of the deeper (i.e., late Final Neolithic) history of this form in the Cyclades, as opposed to on Crete, and the close Cycladic links apparent in the FN IV and EM IA ceramic assemblages from Kephala Petras, it seems reasonable to ascribe a Cycladic origin to east Cretan esteem for such metal vessels.

OBSIDIAN

The chipped-stone tools from Kephala Petras are exclusively obsidian and almost entirely Melian in origin.[95] Although the use of Melian obsidian is a general characteristic of Cretan Neolithic assemblages,[96] the FN IV assemblage from Kephala Petras is unusual in several respects. First, although the total quantity of obsidian represented (N=1,376; total wt. less than 2–3 kg) could theoretically have been brought in a single journey, it is nevertheless present in significantly higher proportions than at almost any other known Cretan FN IV site. At large inland village sites, such as Knossos, obsidian is present only in small quantities, while at smaller sites, such as those in the agriculturally marginal upland region of Ziros, immediately south of Kephala Petras, obsidian is as good as absent.[97] This disparity becomes all the more notable because the size of the excavated FN IV sample from Kephala Petras is much smaller than that from Knossos or Phaistos. Indeed, the only FN IV site to rival Kephala Petras in obsidian density is the coastal site of Nerokourou in

[91] Karantzali 2006, figs. 7.11.16, 7.11.17.

[92] Karantzali 2006; Kariotis (forthcoming).

[93] Nakou 1995, 2007.

[94] Bernabò-Brea 1964, pls. 4, 9, 10; Wilson 1999, pl. 4.1.150–66; Kariotis (forthcoming).

[95] Our summary of the obsidian from Kephala Petras is based on D'Annibale 2008.

[96] Conolly 2008.

[97] Branigan 1998.

This content downloaded from 194.80.178.1 on Thu, 02 Mar 2017 14:56:13 UTC
All use subject to http://about.jstor.org/terms

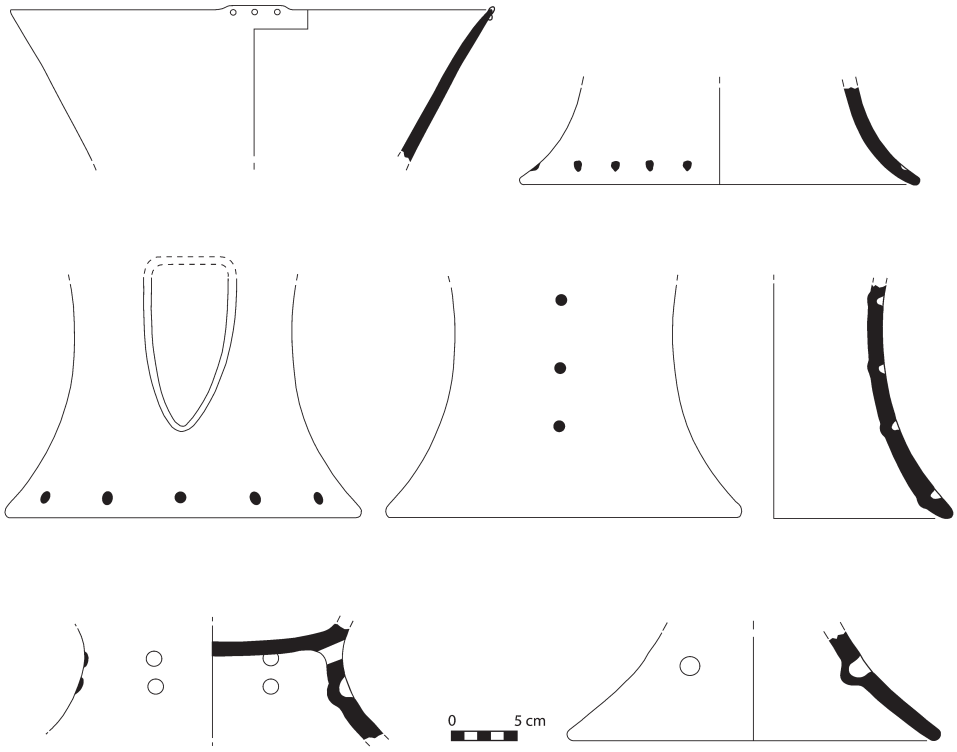

Fig. 9. EM IA ceramic skeuomorphs of sheet metal vessels.

west Crete.[98] Clearly, however, access was not unlimited. At Kephala Petras, the splintering of exhausted cores and waste indicates a high level of resource stress, although the fact that no other chipped-stone sources were used implies that supply was sufficient to meet requirements. A feature of the FN IV industry, which did not continue into EM IA, was the use of flakes as expedient tools. This neglect of an important potential source of tool blanks may imply that the availability of obsidian was greater in EM IA.

A second unusual feature is that most (if not all) of the obsidian arrived directly in raw nodule form and not as prepared cores produced at intermediary processing centers. This contrasts with how obsidian was accessed at late Final Neolithic inland sites. Thus, for example, at FN III–IV Knossos obsidian is rare and always in the form of end products (i.e., blades, flakes). This suggests that the Kephala Petras community, unlike its contemporary inland neighbors, enjoyed privileged, primary access to obsidian in its raw nodule form.

A third unusual characteristic is the way the FN IV–EM IA knapping technology at Kephala Petras closely follows technological developments in the Cyclades. Pressure flaking, blade production, burin technology, and use of flakes (the last only in the FN IV phase) connect the site more intimately with the wider contemporary Aegean world outside Crete (and the west Cretan coastal site of Nerokourou) than with communities in the Cretan interior. Although pressure flaking is conventionally seen as an Early Bronze Age feature, its rare presence in the FN IV obsidian assemblage from Kephala Petras links it to a small group of late Final Neolithic Cycladic sites where this technology is also present (e.g., Zas Cave on Naxos).[99] Similarly, the production at EM IA Kephala Petras of long symmetrical prismatic blades with the use of macroblade cores establishes a link with the Grotta-Pelos Group of the early EB I Cyclades, where such blades appear for the first time in funerary contexts.[100]

It has been argued for EM IB–II that access to pressure-flaked obsidian prismatic blades, and particu-

[98] Christopoulou 1989.
[99] Zachos 1990, 31; Carter 2008b, 228–29.
[100] Doumas 1977, pl. 51c; Carter 1998, 61.

This content downloaded from 194.80.178.1 on Thu, 02 Mar 2017 14:56:13 UTC
All use subject to http://about.jstor.org/terms

larly the technology for their production, was restricted to specific communities and that the deployment of blades was largely restricted to ritual contexts, where it served as a marker of (special) status and identity.[101] It would now appear that this model is also valid for EM IA, if not FN IV. While pressure-flaked prismatic blades were present at Kephala Petras already in FN IV and more frequently in EM IA, pressure flaking and indeed obsidian are very rare or absent at FN IV and EM I sites in its vicinity.[102] Furthermore, the presence of percussion scars, characteristic of the use of a metal punch, suggest that privileged access to metal tools and obsidian may have played a role in maintaining this regional monopoly over access to obsidian and pressure-flaked prismatic blades. Although the context of the Kephala Petras prismatic blades is not funerary, it remains possible (in the absence of FN IV–EM IA funerary contexts at Kephala Petras) that Cycladic-inspired funerary consumption of long prismatic obsidian blades on Crete[103] was adopted well before EM IB, at least at well-connected communities like Kephala Petras.

METALLURGY

The excavations at Kephala Petras also produced limited evidence for metallurgy, including two pieces of copper ore, six slag fragments, and four pieces of iron ore.[104] In addition, a few deformed clay fragments, clearly subjected to high temperatures, may represent refractory material used in the metallurgical process. These clay fragments come from primary destruction deposits with pure FN IV pottery. Although the ore and slag fragments were found in secondary deposits (i.e., mixed FN IV–EM IA), a significant group (comprising copper ore fragments and at least two copper slags) derive from deposits stratified below the floors of the EM IA building complex and thus predate its construction. This would give a date range of FN IV–early EM IA for the metallurgical activity at Kephala Petras, with the strong likelihood that it began in FN IV.

Analysis indicates that this FN IV/early EM IA metallurgical activity involved the smelting of oxidized ores for the production of metallic copper, while the iron ores were probably used as flux.[105] This links Kephala Petras more broadly with the late Final Neolithic–Early Bronze Age metallurgical tradition of the southern Aegean, where similar metallurgical processes were followed for the production of copper at smelting sites on Kythnos, Seriphos, Daskaleio-Keros, and Crete.[106] Smelters at Kephala Petras probably used small open crucibles, but the technology was rather advanced, as copper loss did not exceed 1–3%. While the scale of this activity seems very limited, it should be noted that the excavated area represents a relatively small sample of the total site. And so, with no clear evidence currently available for metallurgy elsewhere on Crete during FN IV–EM IA,[107] Kephala Petras appears, once again, to be more intimately linked with a world beyond Crete, in this case with a handful of sites, such as Kephala and Paoura on Kea and Yiali on Nisyros,[108] where small-scale copper smelting was practiced from the end of the Neolithic. Although nothing can be said with certainty about the source of the copper, the scarcity of copper sources on Crete, their distance from east Crete, and the absence of evidence for their exploitation during this period suggest an off-island source.

SPINDLEWHORLS

The excavations produced a total of 25 spindlewhorls, including a secure FN IV group from within the Neolithic building and 13 from probable or certain EM IA contexts (fig. 10). A striking feature of the FN IV group is its typological variability, with symmetrical biconical, asymmetrical biconical, and conical forms present. There is also variation in the technology and provenance of the spindlewhorls within these two groups. In the case of the FN IV group, while at least three spindlewhorls are in the Local Grog fabric (see fig. 10a–c), one has been shown by petrographic study to belong to the Off-Island Imported White Mica Schist Group (see fig. 10d). At least one other spindlewhorl, of probable FN IV date but from a mixed context, is in a white mica schist fabric. Such typological and technological variation is unusual in late Final Neolithic Crete. In the much larger (more than 25-item) assemblage of FN III–IV spindlewhorls from Knossos, there is only one type (symmetrical biconical) and seemingly only one (local) fabric.[109] For Final Neolithic parallels

[101] Carter 1998.

[102] Branigan 1998.

[103] Carter 1998.

[104] Papadatos 2007b, 160–62; Catapotis et al. 2011.

[105] For details on the metallurgical process, see Catapotis et al. 2011.

[106] Gale et al. 1985; Bassiakos and Doumas 1998; Papastamataki 1998; Broodbank 2000a, 159; Bassiakos and Catapotis 2006; Bassiakos and Philaniotou 2007; Catapotis and Bassiakos 2007; Georgakopoulou 2007.

[107] Although late Final Neolithic copper smelting has been claimed for Chrysokamino (Betancourt 2006), the technology of the metallurgical remains is more consistent with the late Early Minoan period (Muhly 2006, 177), a conclusion reinforced by ceramics, including pot bellows, of EM III–Middle Minoan IA date (Betancourt 2006, 126).

[108] Sampson 1988; Nakou 1995, 3–8; Muhly 2002, 77.

[109] Fabric 1e. See Tomkins et al. (2004a) for a definition of this fabric.

This content downloaded from 194.80.178.1 on Thu, 02 Mar 2017 14:56:13 UTC
All use subject to http://about.jstor.org/terms

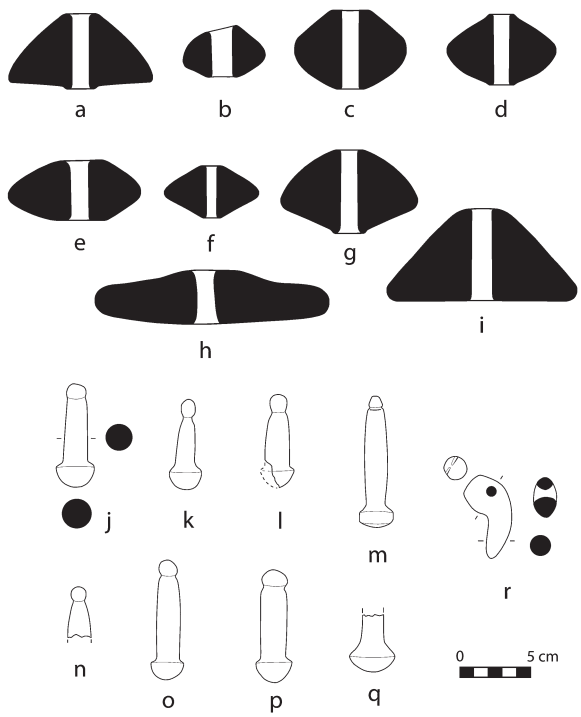

Fig. 10. FN IV and EM IA spindlewhorls and pendants: *a–d*, Final Neolithic spindlewhorls; *e–i*, EM IA spindlewhorls; *j–r*, pendants.

for such typological complexity and for the conical and asymmetrical biconical spindlewhorl types from Kephala Petras, one has to look beyond Crete (e.g., at Ftelia on Mykonos).[110]

A similar degree of typological and technological variation is also apparent for the group of 13 spindlewhorls of probable or certain EM IA date. A variety of conical, spherical, and biconical (asymmetrical and symmetrical) types are represented (see fig. 10e–h), and macroscopic study suggests that both local and nonlocal fabric groups are represented. One spindlewhorl with an unusual conical profile (see fig. 10i) occurs in a calcite-tempered fabric similar to that of the EB I Cycladic or Cycladicizing pottery from the site. Close parallels in form and fabric are to be found from late EC I onward at the Cycladic site of Markiani on Amorgos.[111] Thus, it seems that the FN IV and EM IA communities at Kephala Petras were unusual in Cretan terms in their access to and emulation of a wider variety of spindlewhorl types, including those from the same off-island sources as the FN IV White Mica Schist Group and EM IA Cycladic/Cycladicizing calcite-tempered pottery.

BODY ORNAMENTS

Eight small objects (see fig. 10j–q), apparently pendants, were found grouped close together in a secure FN IV context. Their similar form and contextual proximity suggest that they originally belonged to a group and had been deposited as a set. Intriguingly, they are made of different materials: one is of white spondylus shell (see fig. 10m); three are of steatite of varying color (black, olive brown, and olive green) (see fig. 10j–l); and the remaining four (see fig. 10n–q) are in white mica schist ceramic fabrics that link them to the White Mica Schist Group of imported pottery. The pendants have a distinct and vaguely phallic form consisting of a cylinder with a horizontal groove around which a cord could be fastened at one end and a bulbous, spherical projection at the other. Although there are no precise contemporary parallels from Crete or the Aegean, miniature stone phalli of late Final Neolithic date are known from some Aegean cave sites, including Kitsos and Skoteini, and several larger phallic "idols" are reported from the Cretan caves of Pelekita (Final Neolithic), Trapeza (mixed Final Neolithic/Early Minoan), and Stravomyti (Final Neolithic?).[112] The recurrence of phallic imagery at Final Neolithic cave sites, which appear more generally to have functioned as foci for ritualized forms of deposition, may be connected with some form of fertility ritual.[113] Their occurrence in white mica schist fabrics and the presence of phallic miniatures in caves in Attica and Euboea may suggest that FN IV Kephala Petras enjoyed a particular intimacy with ideas and practices in the Attic-Kephala region.

A similar set of connections is suggested by a horn-shaped spondylus shell pendant, also from a FN IV context (see fig. 10r), the closest parallels for which are from the late Final Neolithic Kitsos Cave.[114] More generally, the presence of spondylus objects at Kephala Petras links it to a restricted group of late Final Neolithic sites beyond Crete in the southern Aegean, typically caves such as Zas, Alepotrypa, Kitsos, and Theopetra, where such objects appear to represent rare, high-value depositions outside the main northern Aegean zone of production and consumption.[115] Current evi-

[110] Sampson 2002, fig. 135.
[111] Gavalas 2006.
[112] Vialou 1981; Sampson 1992, figs. 24, 25, 27; Tomkins 2013.
[113] Nakou 1995; Tomkins 2009.
[114] Vialou 1981, 410, fig. 282.
[115] Tomkins 2009, 139; Theodoropoulou 2011.

This content downloaded from 194.80.178.1 on Thu, 02 Mar 2017 14:56:13 UTC
All use subject to http://about.jstor.org/terms

dence for later Neolithic production of spondylus shell objects suggests that specific northern Aegean coastal communities, such as Dimini, may have specialized in the production of spondylus objects, which were consumed locally and exchanged with outside communities, in some cases traveling many hundreds of kilometers into central Europe.[116]

TRADING IN THE LATE FINAL NEOLITHIC–EB IA AEGEAN

FN IV Crete, the Attic-Kephala Connection, and the Longboat

The evidence presented here indicates that during FN IV the Kephala Petras community enjoyed an unusually close relationship with certain communities located beyond Crete, probably within the Attic-Kephala cultural region of the northwest Cyclades and Attica (fig. 11). This is not in itself a new idea; Vagnetti's study of the pottery from the late Final Neolithic coastal site of Nerokourou in west Crete also pointed to an Attic-Kephala link and prompted her to conclude that by the late Final Neolithic the "people of Crete and the other Aegean islands became more and more aware of each other."[117] However, the greater range and detail of the evidence now available from Kephala Petras allows us to go further in characterizing the nature of this connection. It did not simply involve the exchange of finished objects, such as pottery, spindlewhorls, and pendants, or just raw materials, such as obsidian and metal, but included also new ideas and practices, whether technological, in the case of obsidian production and metallurgy, consumptive, in the case of the adoption of new container forms (and practices), or symbolic, in the case of the beliefs implied by the imagery of the phallic pendants. What we seem to be seeing at FN IV Kephala Petras is an (already outward-looking) indigenous late Final Neolithic Cretan coastal community that, although rooted in existing local (i.e., Cretan) traditions of material reproduction, was also actively seeking out, experiencing, and in many instances adopting or adapting ideas and practices that were current in an entirely different corner of the Aegean.

A significant characteristic of this external relationship is its specificity, measured in the absence of evidence for a similarly close relationship between Kephala Petras and any of the intervening, more proximate regions of the Aegean, most notably the Dodecanese but also the southern (e.g., Thera) and central (e.g., Naxos) Cyclades. While general aspects of typology often overlap between the Attic-Kephala region, the central and southern Cyclades, and the Dodecanese, it is generally accepted that there are sufficient stylistic differences between these regions to allow the identification of distinct regional style zones during the late Final Neolithic.[118] Thus, in the case of cheesepots, those from sites in the Dodecanese typically have an internally positioned lug handle, while those from Attic-Kephala sites and Kephala Petras do not. Similarly, in the latest Final Neolithic deposits in the central (e.g., Zas Cave on Naxos, stratum IIb) and southern Cyclades (e.g., Akrotiri on Thera),[119] bowls with a rolled rim are already present; yet these are absent at sites of the same date in the Attic-Kephala region (e.g., Hagia Irini phase I)[120] and at Kephala Petras.

However, the reason we can argue for specificity with such confidence lies in the comprehensive nature of our total integrated characterization. By macroscopically sorting all recovered Neolithic sherds and assigning them to petrographic fabric groups and by recording all features of form and surface treatment per fabric, we can be certain that we have characterized the technology and typology of all traditions of ceramic production represented in our excavated sample. Although we actively searched for pottery that might link typologically and/or technologically to other regions of the Aegean, especially the Dodecanese, we did not identify a single imported sherd that exhibited any such links; instead, the stylistically non-Cretan pottery fell neatly into a group of white mica schist fabrics that exhibit a close mineralogical and typological interrelationship. A sense of the relative intensity of this off-island, Attic-Kephala relationship is provided by the fact that the White Mica Schist Group constitutes as much as 10% of the Neolithic building assemblage. Thus, although the absolute quantity of off-island pottery in circulation in FN IV was not high, at least by later Early Bronze Age standards, it is surely significant that the quantities of pottery arriving at Kephala Petras from the distant Attic-Kephala region were equivalent to those from local Cretan sources.

And so it would seem that the community at Kephala Petras had a specific and directed relationship with the distant Attic-Kephala region, one that effectively ignored or bypassed more proximate regions and that appears to have been relatively intense given the distances involved. Indeed, maritime distance seems

[116] Halstead 1993; Theodoropoulou 2011.
[117] Vagnetti 1996, 39.
[118] Sampson 1984.
[119] Sotirakopoulou 1999, 100–2; Zachos 1999, 153; Kariotis (forthcoming).
[120] Wilson 1999, 7.

This content downloaded from 194.80.178.1 on Thu, 02 Mar 2017 14:56:13 UTC
All use subject to http://about.jstor.org/terms

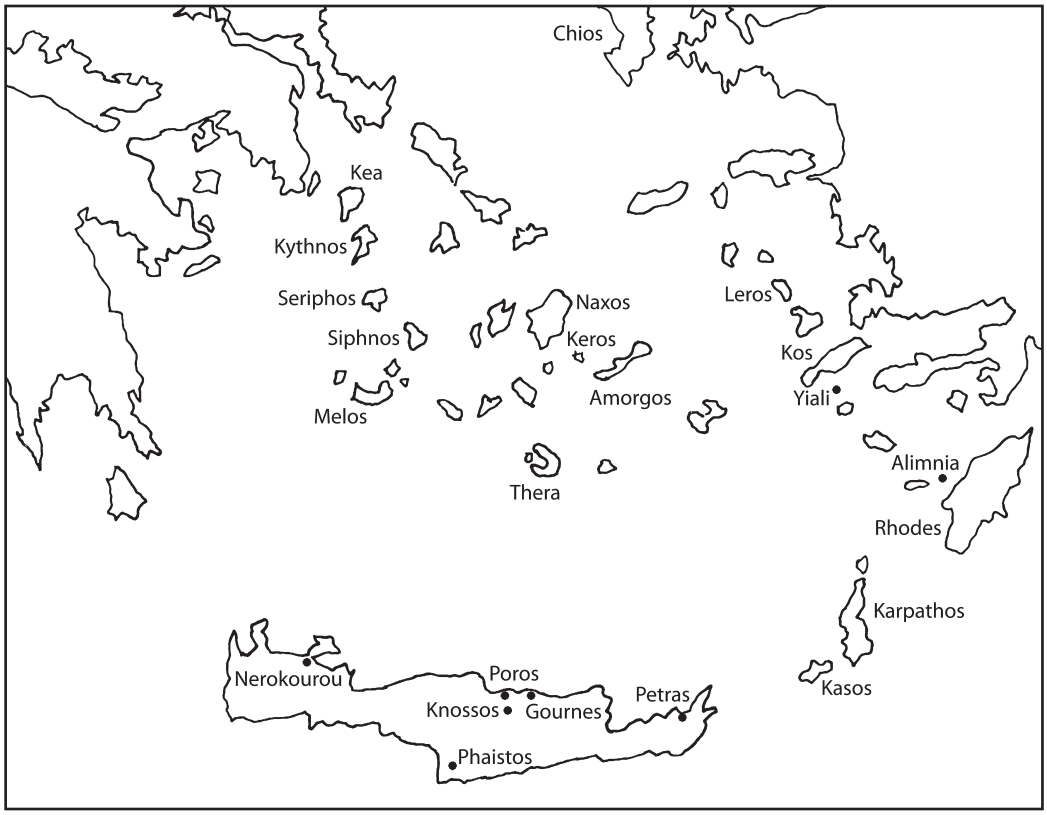

Fig. 11. Map of the Aegean with sites mentioned in the text.

to have shrunk so that, on the one hand, objects, practices, and raw materials from the northwestern Cyclades/Attica-Euboea were as accessible at Kephala Petras as those produced elsewhere on Crete, and, on the other hand, the extensive, settled land- and seascapes that lay in between could apparently be bypassed. The evidence from FN IV Kephala Petras thus implies the existence of a more sophisticated form of maritime movement than the coastal hopping usually envisaged for Neolithic maritime movement. Instead, a capability to travel more quickly, more directly, and over longer distances is suggested, one thus close to the EB II longboat, on which recent modeling of EB II trading networks is based.[121] We can now say not just that the construction of longboat-type vessels was technically possible in the late Final Neolithic Aegean[122] but that before the end of the Final Neolithic a craft of this type had been seen in the islands (e.g., Strophilas) and had demonstrably influenced interregional connectivity and cultural interaction.

Gateway Communities in the Late Final Neolithic and Early EB I

While access to a craft with similar capabilities to the longboat would go a long way toward explaining how the Attic-Kephala connection was maintained, there remains the question of why. One obvious factor is the presence of important mineral resources in, or within easy reach of, this region, notably Melian obsidian and the metal sources of Laurion and the western Cycladic arc (e.g., Siphnos, Kythnos). Exploitation of these metal sources during the late Final Neolithic is suggested by lead isotope analysis of later Neolithic metal artifacts,[123] while the presence of smelting furnace fragments at late Final Neolithic Kephala on Kea marks out at least one Attic-Kephala community as having access to metal ores and the specialist metallurgical knowledge required to process them.[124] In this way, by forging a special relationship with one or more communities within the Attic-Kephala region, the FN IV community at Kephala Petras could and

[121] Broodbank 2000a, 276–79.
[122] Broodbank 2000a, 97.
[123] Stos-Gale and Gale 2003; Bassiakos and Philaniotou 2007; Georgakopoulou et al. 2011.
[124] Coleman 1977, 3–4, 113–14; Bassiakos and Philaniotou 2007, 47.

This content downloaded from 194.80.178.1 on Thu, 02 Mar 2017 14:56:13 UTC
All use subject to http://about.jstor.org/terms

evidently did secure access to the raw materials and specialist technological knowledge needed to produce artifacts in obsidian and metal. Thus, the logic behind the specificity of this Attic-Kephala relationship should be seen to have been directed, first and foremost, by a desire to access certain commodities and technologies (i.e., by trading) rather than certain social relationships (i.e., by gift exchange).

However, while this looks like trading, one would also expect to see evidence that Kephala Petras sought to monopolize or otherwise control local Cretan access to these raw materials and technological knowledge and thereby accumulate symbolic and political capital. In short, one would expect to see FN IV–EM IA Kephala Petras operating as a "gateway community" within its region. Several gateway communities of EM IB and/or EM II date have been identified in Crete, some on the basis of cemetery assemblages (e.g., EM IB Hagia Photia, Gournes), others from settlement assemblages (e.g., EM IB–II Poros-Katsambas). All are characterized by a strong connection with the Cyclades, whether the EC IB Kampos Group or the EC IIA Keros-Syros Group.

At the cemetery at Hagia Photia, lying near the Kephala Petras settlement but dated to the following phase (EM IB), the form of the graves and the character of funerary deposition is overwhelmingly Cycladic in style.[125] The ceramic assemblage is dominated by pottery produced in a Cycladic tradition of calcite tempering and in forms that find close parallels in the Kampos Group, but it was produced locally on Crete.[126] Marble and obsidian are present, and the technology of the obsidian blades shows close Cycladic affinities and differs from other Cretan obsidian assemblages.[127] In addition to many metal objects, local metallurgical knowledge is demonstrated by two used crucibles from the cemetery and molds for casting axes from the contemporary nearby settlement of Hagia Photia Kouphota.[128] Interestingly, while the EM IB evidence from Hagia Photia indicates the melting of copper ingots, the slightly earlier (FN IV/EM IA) metallurgy from nearby Kephala Petras involved the smelting of copper ores.

A similar concentration of off-island materials and technologies is present at the central Cretan coastal settlement of Poros-Katsambas, where approximately 30% of the EM IB pottery is either imported Cycladic or local Cycladicizing in a Cycladic paste and container tradition, comprising a range of (mainly domestic) cooking, serving, and storing forms.[129] In EM IIA contexts, the percentage of the Cycladicizing vessels drops significantly, and the functional range of forms is restricted to transport storage (jars) and liquid serving (sauceboats).[130] There is also evidence for craft activity, particularly the production of obsidian blades at a scale well above the needs of the local community and the melting, alloying, and casting of Cycladic metals (copper) for the production of objects such as midrib daggers.[131] Notably, this concentration of Cycladic imports, materials, and technologies at Poros-Katsambas contrasts markedly with their scarcity at the nearby inland settlement of Knossos.[132] Large village communities, such as Knossos and Archanes, were clearly consumers of the Cycladic raw materials and finished objects that entered north-central Crete via Poros-Katsambas, as the presence of obsidian and imported Cycladica testifies.[133] Access to the raw materials and the technologies for their transformation seems to have been monopolized by Poros-Katsambas.

The settlement and cemetery at Mochlos present a more complex picture. Although FN IV and EM I pottery has been reported there, current evidence suggests that Mochlos most clearly functioned as a gateway community during EM II–III.[134] The presence of very large assemblages of obsidian at Mochlos (exhibiting all stages of blade production with only end products underrepresented), in contrast to other neighboring EM II sites, suggests that it was the primary procurer of obsidian for east Crete in EM II.[135] Unusually, however, EM II Mochlos preserves little evidence for close cultural interaction with the Cycladic world; it instead looked east, particularly during EM IIB, as suggested by the presence of objects such as cylinder seals, Egyptian stone vases, beads of semiprecious stones (chalcedony and carnelian), and the use of gold and ivory for the local production of high-status artifacts.

Thus, for EM IB–II it has become clear that certain communities strategically located along the north coast of Crete enjoyed privileged access to off-island raw materials (e.g., metals, obsidian, emery, ivory),

[125] Day et al. 1998; Davaras and Betancourt 2004; Tsipopoulou 2007.

[126] Day et al. 1998, 2012; Wilson et al. 2008.

[127] Carter 1998.

[128] Betancourt and Muhly 2007; Tsipopoulou 2007. A copper axe and Cycladicizing pottery are also reported.

[129] Wilson et al. 2004; 2008, 262; Dimopoulou-Rethemiotaki et al. 2007.

[130] Wilson et al. 2008, 265.

[131] Doonan et al. 2007.

[132] Wilson et al. 2004; Carter 2008b, 234–35.

[133] Carter 1998; Wilson et al. 2004, 2008; Papadatos 2007b.

[134] Branigan 1991; Soles and Davaras 1996, 175–80; Carter 2004.

[135] See discussion in Carter 2004.

This content downloaded from 194.80.178.1 on Thu, 02 Mar 2017 14:56:13 UTC
All use subject to http://about.jstor.org/terms

knowledge (e.g., metallurgy, traditions of ceramic production), and finished goods (e.g., pottery, marble objects) and that through this monopoly they were able to control the distribution of these off-island commodities to local consumers. In this way, these later Early Minoan gateway communities mediated how the island interior of Crete accessed and conceptualized a wider world beyond the island.

In the case of FN IV–EM IA Kephala Petras, the extent to which any potential gateway effect can be explored is limited by the paucity of excavated data from contemporaneous sites in the Siteia region. The region has, however, seen several intensive or extensive surface surveys and investigations,[136] and together these provide some insights into the character and configuration of settlement and thus the wider regional context in which Kephala Petras operated. Most of the FN IV–EM IA sites located by these surveys are small, from hamlets to very small scatters that could not have amounted to more than one or two dwellings. Many are located in the extensive upland interior (fig. 12), where they form dispersed communities exploiting more marginal (i.e., less extensive and/or productive) agricultural land within discrete valley systems.[137] Cost-distance modeling of movement within this upland landscape and between it and the coast has highlighted the nodal position of the main Bronze Age coastal communities of Petras, Palaikastro, and Zakros in linking inland networks with the sea.[138]

Surface assemblages from these upland sites are typified by the presence of low-fired burnished or polished pottery, which, in the case of the Katelionas and Lamnoni Valleys, is grog tempered. Typologically, most, perhaps even all, of this pottery is FN IV in date and finds close parallels in other Cretan FN IV assemblages.[139] It is notable that none of the upland sites so far examined has produced pottery of off-island influence, nor is there much in the way of imported fabrics. For example, cheesepots appear to be very rare in sites in the Siteia uplands.[140] Also, small quantities of such vessels are present at a handful of coastal or coast-proximate sites—namely, Livari, Xerokambos, Zakros, Hagia Triada, and Kalamafki Kypia,[141] but none has yet produced evidence for off-island pottery imports.

Much the same can be suggested for EM IA. Recent excavations at Mesorrachi Skopi, which lies approximately 6 km to the west of Kephala Petras, have investigated an EM IA tholos tomb and corresponding settlement.[142] The EM IA pottery includes material identical to that from Kephala Petras and probably imported from that site, such as Dark-Gray Burnished Ware chalices and cups, Wiped and Washed Ware hole-mouthed jars, and pithoi with patterned cordon decoration. However, although the site is only 1.5 km from the north coast, no evidence for any off-island contacts has been identified. This supports the idea that Kephala Petras continued to act as a gateway community for its region during EM IA. Further indirect support for this is provided by a fragment of an EM IA ceramic boat model at Kephala Petras, which is the earliest currently known on Crete (fig. 13).[143]

During FN IV and EM I, obsidian was no more than a rare presence in the Siteia region beyond Kephala Petras. In the Katelionas and Lamnoni Valleys, in the Siteia uplands, surface survey indicates use of local chert sources,[144] with obsidian present very rarely and only at certain sites.[145] Surveys around Zakros, Livari and Magasa, Xerokambos, and Goudouras reveal a similar picture.[146] This prompted Carter to conclude that "throughout the [late Final] Neolithic and Bronze Age, the procurement, reduction, consumption, and secondary exchange of obsidian was primarily articulated through communities located upon, or near, the northern littoral."[147] At EM IA Mesorrachi Skopi, a single pressure-flaked prismatic blade was found, indicating that obsidian was not widely accessible, even to small communities near the coast.

The extreme scarcity of obsidian and the exploitation of local chert at FN IV and EM I sites in the wider Siteia region contrast sharply with the picture at Kephala Petras, where the entire chipped-stone assemblage is of obsidian. Moreover, this contrast in access to an off-island lithic raw material is matched by a parallel contrast in access to the technology for its reduction. On the rare occasions that obsidian

[136] Tsipopoulou 1989, 1990; Branigan 1998; Whitley et al. 1999; Vokotopoulos 2000; Schlager 2001; Greco et al. 2002; Nowicki 2002; Papadatos and Sofianou 2013.

[137] Tomkins et al. 2004b; Tomkins 2008, 36–40.

[138] Tomkins et al. 2004b.

[139] Tomkins 2007; 2008, 36–40.

[140] Generally, cheesepots are absent from inland Cretan sites or are present as rare imports (e.g., at Knossos) (Tomkins 2007, 44).

[141] Vokotopoulos 2000, 133; Schlager 2001, 183–84, 200–1; Nowicki 2002, 27–8, 54–63.

[142] Papadatos and Sofianou 2013.

[143] Papadatos 2012b.

[144] Branigan 1998, 48–50.

[145] E.g., obsidian is present at certain peak sites, for which a ritual function has been proposed (Branigan 1998, 57–9; Tomkins et al. 2004b).

[146] Vokotopoulos 2000, 132; Schlager 2001, 201; Nowicki 2002.

[147] Branigan 1998, 49.

This content downloaded from 194.80.178.1 on Thu, 02 Mar 2017 14:56:13 UTC
All use subject to http://about.jstor.org/terms

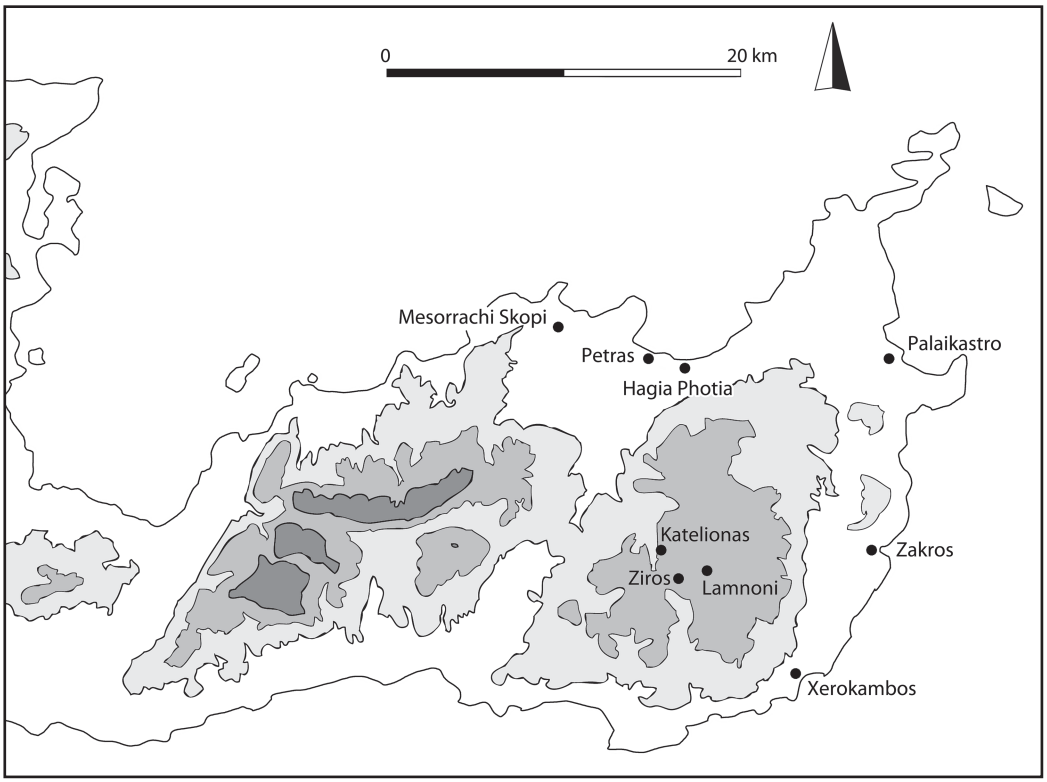

Fig. 12. Map of east Crete with sites mentioned in the text.

does occur at sites beyond Kephala Petras, it is in the form of end products (including pressured-flaked, prismatic blades). In the absence of a pressure-flaked industry in local chert, it may be concluded that the obsidian arrived in the form of finished tools that had been produced elsewhere, probably at Kephala Petras. Thus, contemporary inland sites were excluded not only from accessing obsidian in raw material form but also from the technology for its transformation into pressure-flaked blades.

Metal objects of FN IV–EM IA date are extremely rare. However, a small fragment from the EM IA tholos at Mesorrachi Skopi and a surface find of a flat axe from Katelionas associated with FN IV pottery demonstrate that such objects were known.[148] The axe finds close parallels at several Final Neolithic–EB I Aegean sites, including late Final Neolithic levels at the Zas Cave on Naxos and the EM IB Hagia Photia cemetery.[149] Mention should also be made of a copper axe from a secure FN IV context at Knossos.[150] Given the absence of evidence for direct contact between these upland sites and the wider Aegean world, it seems most probable that the Katelionas flat axe arrived via

Fig. 13. EM IA boat model from Kephala Petras.

[148] For the fragment from Mesorrachi Skopi, see Papadatos and Sofianou 2013. For the axe from Katelionas, see Branigan 1998, 50.

[149] Davaras and Betancourt 2004, figs. 9.2A.49, 482.215.11; Zachos 2007, 173, 175–76, fig. 11.4. Typologically similar axe molds also appear at the nearby EM IB site of Hagia Photia Kouphota (Tsipopoulou 2007).

[150] Evans 1928, fig. 3; Tomkins 2007, 41–4.

This content downloaded from 194.80.178.1 on Thu, 02 Mar 2017 14:56:13 UTC
All use subject to http://about.jstor.org/terms

an intermediary, and Kephala Petras is the most likely candidate. It is unclear whether it was imported to Crete as a finished object or produced locally, but the metallurgical evidence from Kephala Petras makes the latter equally plausible.

The FN IV–EM IA regional picture therefore suggests that there were major differences in access to off-island raw materials, technologies, and objects between Kephala Petras and contemporary inland sites. It would appear that the community at Kephala Petras not only monopolized access to off-island raw materials and to the technology for their transformation but also restricted access to finished products and controlled their distribution within its region. Given the limitations of the current data, it seems reasonable to leave open the possibility that other coastal communities located at other nodal points in the Siteia region, such as Palaikastro and Zakros, performed a similar gateway function for their microregions. For example, cheesepots and obsidian are present, in small quantities, in the surface assemblages from Zakros Kato Kastellos and Xerokambos Kastri.[151] However, based on the present evidence, Kephala Petras appears to have been the most well-connected FN IV–EM IA community in the Siteia region, the only one accessing off-island raw materials, objects, knowledge, and practices and thus the main point of mediation between Siteia and the wider Aegean.

CONCLUSIONS

Detailed integrated characterization of the FN IV–EM IA assemblage from Kephala Petras and comparison with contemporary assemblages from sites within its wider region indicate that we need to push certain elements of the longboat-trading model back at least as far as the end of the Neolithic. It has been argued that the special relationship between FN IV Kephala Petras and communities in the Attic-Kephala region, particularly its intensity and specificity (to the exclusion of more proximate off-island regions) and the distances involved, point to the use in FN IV of a craft similar in capabilities to the longboat and in form to the craft depicted in the late Final Neolithic Strophilas petroglyphs. Through its special relationship with certain communities within the Attic-Kephala region, the FN IV community at Kephala Petras was able to secure privileged access to both off-island raw materials, such as obsidian and metal, and off-island technologies to transform those materials into finished goods. Although the configuration of these off-island contacts appears to have changed during EM IA, with typological links and parallels becoming closest with the southern Cyclades (e.g., Akrotiri),[152] the role of Kephala Petras as a gateway community continued. Comparison with contemporary sites within the wider region of Siteia suggests that FN IV–EM IA Kephala Petras and EB IB–II gateway communities operated in a similar way, monopolizing access to off-island regions, controlling access to valued off-island commodities, and thereby accruing symbolic and political capital at a regional level.

Although the intensity of interaction in FN IV–EM IA (as measured in the volume of commodities being exchanged) is likely to have been much lower than in EB IB or II and although the act of exchange may have looked a lot like gift exchange, such patterns and behaviors nevertheless conform to conventional definitions of trading. Moreover, they are analogous to later cases, such as those of EB II, where trading is generally accepted to have been practiced. It would appear that the Kephala Petras community's prime motivation for selecting the Attic-Kephala region in FN IV and the southern Cyclades in EM IA was to secure privileged access to the specific commodities of metal and obsidian and the technologies for their transformation. However, there was clearly also a wider interest in experiencing, adopting, and emulating new forms, ideas, and practices, most obviously seen in the selective adoption of specific, off-island forms and practices into the local FN IV and EM IA repertoire.

It would appear, therefore, that we should now privilege the late Final Neolithic in general and FN IV in particular as the time when a way of life emerged that would, in different forms and at different scales, remain a feature of the Aegean littoral throughout the Bronze Age and beyond. The emergence of trading is one of a series of related changes that occurred in the late Final Neolithic Aegean, changes that, understood together, are tantamount to a transformation of later Neolithic social rights and obligations and that effectively represent the beginning of recognizably "Bronze Age" forms of existence and development.[153] With the emergence of trading and marginality, FN IV Crete underwent a process of socioeconomic diversification, which opened up new areas of the landscape for exploitation, stimulated regional diversity, and set in train a series of divergent trajectories of development.[154] An obvious axis of divergence, one clearly already apparent in FN IV, operated between the coast and the inland interior.

[151] Nowicki 2002, 22–4.
[152] Kariotis (forthcoming).
[153] For discussion, see Tomkins 2010.
[154] Tomkins and Schoep 2010.

This content downloaded from 194.80.178.1 on Thu, 02 Mar 2017 14:56:13 UTC
All use subject to http://about.jstor.org/terms

It would also appear that we need to modify the parameters of the longboat-trading model, at least as it is conventionally conceived. Recognition of the Aegean's deeper history of trading, gateway communities, and, seemingly, the longboat forces us to confront the differences in scale, intensity, character, and configuration during the much longer period between the late Final Neolithic and the end of EB II. Far from being the essentially static configuration of major players familiar from studies of EB II trading, early Aegean trading emerges as a dynamic and contingent process characterized by success, failure, and shifting networks of relationships. As the histories of earlier trading communities demonstrate (e.g., the population shift in EM IB Kephala Petras and the abandonment of Strophilas before the end of EB I), trading was a volatile venture and fortunes waxed and waned. All communities may go through periodic shortages of labor, but such shortages could leave trading communities more compromised than most.[155] Disputes between trading communities would inevitably have arisen, and regular skirmishing is to be expected.[156] In addition, there would have been a perception that longer-term trading advantage could be rendered by the forced dissolution of a rival trading community. In this way, the eventual restriction of trading to a limited number of "trader sites" in EB II (i.e., Hagia Irini, Chalandriani-Kastri, Grotta-Aplomata, Daskaleio-Kavos)[157] may have been hard won—an endgame that perhaps had evolved out of a more diverse trading landscape characterized by many participating (and competing) groups and communities.

In the case of Kephala Petras, the near disappearance of ceramic imports in white mica schist fabrics in EM IA and their apparent replacement by a group of Cycladic or Cycladic-style vessels in calcite-tempered fabrics would seem to signal a reconfiguration of its trading connections. Relevant also in this context is the local adoption in EM IA of several new forms, such as the fenestrated chalice, the pithos with patterned cordon decoration, and the baking plate, which have a deeper history of development in the central and southern Cyclades and find particularly close parallels at contemporary Cycladic (i.e., Grotta-Pelos Group) sites (e.g., Akrotiri). A similar conclusion might also be drawn from changes in the knapping technology of the obsidian. Taken together, such developments could mark a strategic realignment of the off-island connections of the EM IA Kephala Petras community from the northwest Cyclades/Attica to the central/southern Cyclades.

Further changes were signaled in EM IB when the Hagia Photia-Kouphota trading community, with its clear and very close links to the Kampos Group of the central Cyclades, was established near Kephala Petras. Current evidence suggests that the EM IB Hagia Photia-Kouphota community took over the trading and gateway role of the Kephala Petras community. This may therefore have been a factor in the abandonment of settlement at Kephala Petras late in EM I in favor of the nearby "Palace Hill," which remained the focus of Bronze Age habitation at Petras until Late Minoan III. During EM IB, the people of Petras continued to access off-island objects and to visit the Kephala Hill, as is shown by the presence there of a burial rock shelter containing Cycladic or Cycladicizing objects with close parallels to objects from Hagia Photia.[158] However, this access now seems to have been indirect, probably mediated through the gateway community of Hagia Photia-Kouphota. Likewise, the abandonment of the Hagia Photia-Kouphota community sometime between the close of EM IB and EM IIA may, in turn, have resulted from a reassertion of local control over trading by a resurgent Petras.

Something of the volatility and mutability of Cretan off-island trading relations during and after EM I might also be deduced from changes in the procurement, transportation, and working of metal, with the evidence for smelting at FN IV–EM IA Kephala Petras contrasting with the melting, alloying, and casting evidenced at EM IB Hagia Photia-Kouphota and EM IB–IIA Poros-Katsambas. Also worth noting are changes in the quantity and type of imported Cycladic pottery between EM IB and EM IIA at Poros-Katsambas[159] and the general disappearance of Cycladic finished products (but not raw materials) in EM IIB Crete, which have both been read in terms of changes in the character of the interaction between Cretan communities and the Cyclades.[160] However, equally if not more fickle and unpredictable than these evolving trading networks were the cultures of consumption that stimulated and were sustained by them. Thus, for example, while the equation of social distinction with the ability to conduct maritime activity and access off-island forms and practices may have operated as early as FN IV–EM IA, it did not, at least on current evidence, receive con-

[155] Manning 1994; Whitelaw 2004.
[156] Sherratt 2000.
[157] Broodbank 2000a, 212–22.
[158] Tsipopoulou 2010.
[159] Wilson et al. 2008.
[160] Wilson 1994, 41–4; Broodbank 2000a, 309–19; Dimopoulou-Rethemiotaki et al. 2007, 87, 93. See Tomkins and Schoep (2010, 70) for a discussion.

This content downloaded from 194.80.178.1 on Thu, 02 Mar 2017 14:56:13 UTC
All use subject to http://about.jstor.org/terms

spicuous expression in mortuary consumption until EM IB and later.

Finally, it is worth reflecting on the wider implications of this for our understanding and explanation of culture change at the transition between the Neolithic and the Early Bronze Age. Until recently, the precise sequence of phases and deposits spanning this transition in Crete and consequently the nature, timing, and pace of changes between the Final Neolithic and EM I were not at all well understood; general research tended to prioritize investigation of the Early Minoan period over the Final Neolithic.[161] The net result was that the Final Neolithic seemed uneventful, whereas EM I appeared to be a pivotal phase of sudden, dramatic change, and explanation frequently resorted to an externally sourced invasion or migration to explain this EM I "revolution."[162] However, with improved chronological resolution has come the realization that EM I is but part of a more extended period of realignment stretching deep into the fourth millennium B.C.E. and encompassing also the FN II–IV phases.[163] Moreover, detailed ceramic study at inland sites, such as Knossos and Phaistos, has dispelled old notions of typological, technological, and stratigraphical discontinuity between the Final Neolithic and EM I in favor of underlying local continuity and periodic typological and technological change.[164]

Now the coastal site of Kephala Petras affords us a closer view of the mechanisms driving typological and technological change between FN IV and EM I. Far from resulting from a major, externally sourced invasion or migration, culture change is most obviously driven by the emergence of trading and newly acquisitive cultures of consumption in late Final Neolithic Crete that privileged the rare, the arcane, and the external in the negotiation of status and identity. The FN IV and EM IA ceramic assemblages from Kephala Petras attest to both cultural continuity, in the form of a continuously evolving indigenous Cretan tradition of container production and usage, and cultural change, in the form of a dynamic process of selective emulation and adoption of off-island forms and practices. This combination of continuity and change is most obvious in the case of the cheesepot—which clearly made the transition from experimentation to full adoption before the end of FN IV—but may also be seen in the popularity in EM IA of forms, such as the fenestrated chalice, the pithos with relief decoration, and the baking plate, that have an older history of development beyond Crete. One can also glimpse mechanisms by which off-island forms and practices, mediated via gateway communities such as Kephala Petras, may have diffused to the wider Cretan populace and been adopted and adapted. Although a variety of factors influenced the development of FN IV and early EB I ceramic typology, one of the more significant factors, as suggested by the Kephala Petras assemblage, was the circulation of sheet metal containers, most notably the biconical chalice, at the beginning of EB I. These containers led to the emergence of color-specific wares and the adoption of new form types, constituting an EB IA *Metallschock* akin to those claimed for EB IB and EB II.[165]

Viewing interregional cultural interchange during the late Final Neolithic and early EB I as being mediated through trading communities need not mean that this period did not see changes in the genetic makeup of the Cretan population. In the context of the EB II trading cultures of the Cyclades, Broodbank has argued that status was achieved in part through the establishment of a multiplicity of long-distance relations measured in trading partnerships and intermarriage.[166] Although the scale and intensity of trading was undoubtedly less in FN IV and EM IA than in EB II, there seems little reason to think that status was not similarly bound up with long-distance relations and that marriage partners were not exchanged over long distances. Indeed, it is tempting to read the presence of marriage partners of off-island origin into the occurrence at FN IV and EM IA Kephala Petras of spindlewhorls in off-island types and fabrics. Thus, it is probably in this context that recent claims for an influx of off-island genetic material at around this time (i.e., ca. 3100 B.C.E.),[167] if substantiated by further research, should be situated.

YIANNIS PAPADATOS
DEPARTMENT OF ARCHAEOLOGY AND HISTORY OF ART
UNIVERSITY OF ATHENS
157 84 ZOGRAFOU, ATHENS
GREECE
GPAPADAT@ARCH.UOA.GR

[161] For a discussion, see Tomkins 2007, 2008, (forthcoming); Tomkins and Schoep 2010.

[162] E.g., Evans 1921, 16–18; Warren 1973, 41–3; Hood 1990a, 1990b; Nowicki 1999, 2002.

[163] Tomkins 2008; Tomkins and Schoep 2010.

[164] Tomkins 2007, 2008, 2010, 2012; Todaro and Di Tonto 2008; Todaro 2012.

[165] For EB IB, see Doonan et al. 2007. For EB II, see Renfrew 1972, 338.

[166] Broodbank 1989, 1993, 2000a; see also Arnold 1995.

[167] King et al. 2008.

This content downloaded from 194.80.178.1 on Thu, 02 Mar 2017 14:56:13 UTC
All use subject to http://about.jstor.org/terms

PETER TOMKINS
DEPARTMENT OF ARCHAEOLOGY
KATHOLIEKE UNIVERSITEIT LEUVEN
BLIJDE-INKOMSTSTRAAT 21
3000 LEUVEN
BELGIUM
PETER.TOMKINS@ARTS.KULEUVEN.BE

Works Cited

Alram-Stern, E. 2006. "Die vormykenische Keramik." In *Aigeira I: Die Mykenische Akropolis*. Fasc. 3, *Vormykenische Keramik Kleinfunde Archaozoologische und Archaobotanische Hinterlassenschaften Naturwissenschaftliche Datierung*, edited by S. Deger-Jalkotzy and E. Alram-Stern, 19–88. Vienna: Verlag der Österreichischen Akademie der Wissenschaften.

Arnold, J.E. 1995. "Transportation Innovation and Social Complexity Among Maritime Hunter-Gatherer Societies." *American Anthropologist* 97:733–47.

Bassiakos, Y., and M. Catapotis. 2006. "Reconstruction of the Copper Smelting Process at Chrysokamino Based on the Analysis of Ore and Slag Samples." In *The Chrysokamino Metallurgy Workshop and Its Territory*, edited by P.P. Betancourt, 329–53. *Hesperia* Suppl. 36. Princeton: American School of Classical Studies.

Bassiakos, Y., and C. Doumas. 1998. "The Island of Keros and Its Enigmatic Role in the Aegean EBA: A Geoarchaeological Approach." In *Αργυρίτις Γη, Χαριστήριο στον Κ: Κονοφάγο*, edited by A. Fragkiskos, 55–64. Athens: National Technical University Press.

Bassiakos, Y., and O. Philaniotou. 2007. "Early Copper Production on Kythnos: Archaeological Evidence and Analytical Approaches to the Reconstruction of Metallurgical Process." In *Metallurgy in the Early Bronze Age Aegean*, edited by P.M. Day and R.C.P. Doonan, 19–56. Sheffield Studies in Aegean Archaeology 7. Oxford: Oxbow.

Bernabò-Brea, L. 1964. *Poliochni: Città preistorica nell'Isola di Lemnos*. Vol. 2. Monografie della Scuola archeologica di Atene e delle missioni italiane in Oriente 2. Rome: L'Erma di Bretschneider.

Betancourt, P.P., ed. 2006. *The Chrysokamino Metallurgy Workshop and Its Territory. Hesperia* Suppl. 36. Princeton: American School of Classical Studies.

Betancourt, P.P., and J.D. Muhly. 2007. "The Crucibles from the Aghia Photia Cemetery." In *Metallurgy in the Early Bronze Age Aegean*, edited by P.M. Day and R.C.P. Doonan, 146–53. Sheffield Studies in Aegean Archaeology 7. Oxford: Oxbow.

Branigan, K. 1991. "Mochlos—An Early Aegean 'Gateway Community?'" In *Thalassa: L'Egée préhistorique et la mer. Actes de la 3e Rencontre égéenne internationale de l'Université de Liège, Station de recherches sous-marines et océanographiques (StaReSO), Calvi, Corse, 23–25 avril 1990*, edited by R. Laffineur and L. Basch, 97–105. *Aegaeum* 7. Liège: Université de Liège.

———. 1998. "Prehistoric and Early Historic Settlement in the Ziros Region, Eastern Crete." *BSA* 93:23–90.

Broodbank, C. 1989. "The Longboat and Society in the Cyclades in the Keros-Syros Culture." *AJA* 93(3):319–37.

———. 1993. "Ulysses Without Sails—Trade, Distance, Knowledge and Power in the Early Cyclades." *WorldArch* 24:315–31.

———. 2000a. *An Island Archaeology of the Early Cyclades*. Cambridge: Cambridge University Press.

———. 2000b. "Perspectives on an Early Bronze Age Island Centre: An Analysis of Pottery from Daskaleio-Kavos (Keros) in the Cyclades." *OJA* 19:323–42.

Carter, T. 1998. "Reverberations of the 'International Spirit': Thoughts upon 'Cycladica' in the Mesara." In *Cemetery and Society in the Aegean Bronze Age*, edited by K. Branigan, 59–77. Sheffield Studies in Aegean Archaeology 1. Sheffield: Sheffield Academic Press.

———. 2004. "Mochlos and Melos: A Special Relationship? Creating Identity and Status in Minoan Crete." In *Crete Beyond the Palaces*, edited by L.P. Day, M.S. Mook, and J.D. Muhly, 291–307. Prehistory Monographs 10. Philadelphia: INSTAP Academic Press.

———. 2008a. "Cinnabar and the Cyclades: Body Modification and Political Structure in the Late EBI Aegean." In *The Aegean in the Neolithic, Chalcolithic and Early Bronze Age*, edited by H. Erkanal, H. Hauptmann, V. Şahoğlu, and R. Tuncel, 119–29. Ankara: Ankara University Press.

———. 2008b. "The Consumption of Obsidian in the Early Bronze Age Cyclades." In *Horizon: A Colloquium on the Prehistory of the Cyclades*, edited by N. Brodie, J. Doole, G. Gavalas, and C. Renfrew, 225–35. McDonald Institute Monographs. Cambridge: McDonald Institute for Archaeological Research.

Caskey, J.L. 1972. "Investigations in Keos: Part II. A Conspectus of the Pottery." *Hesperia* 41:357–401.

Catapoti, D. 2011. "Further Thoughts on the International Spirit: Maritime Politics and Consuming Bodies in the Early Cyclades." In *The Seascape in Aegean Prehistory*, edited by G. Vavouranakis, 71–86. Monographs of the Danish Institute at Athens 14. Athens: Narayana Press.

Catapotis, M., and Y. Bassiakos. 2007. "Copper Smelting at the Early Minoan Site of Chrysokamino on Crete." In *Metallurgy in the Early Bronze Age Aegean*, edited by P.M. Day and R.C.P. Doonan, 63–83. Sheffield Studies in Aegean Archaeology 7. Oxford: Oxbow.

Catapotis, M., Y. Bassiakos, and Y. Papadatos. 2011. "Reconstructing Early Cretan Metallurgy: Analytical Evidence from Kephala Petras, Siteia." In *Metallurgy: Understanding How, Learning Why, Studies in Honor of James D. Muhly*, edited by P.P. Betancourt and S.C. Ferrence, 69–78. Prehistory Monographs 29. Philadelphia: INSTAP Academic Press.

Christopoulou, A. 1989. "The Stone Tools." In *Scavi a Nerokourou, Kydonias*, edited by I. Tzedakis and A. Sacconi, 75–85. Recherche Greco-Italiane in Creta Occidentale 1. Rome: Edizioni dell'Ateneo.

Coleman, J.E. 1977. *Keos I: Kephala. A Late Neolithic Settlement and Cemetery*. Princeton: American School of Classical Studies.

———. 1985. "'Frying Pans' of the Early Bronze Age Aegean." *AJA* 89(1):191–219.

Conolly, J. 2008. "The Knapped Stone Technology of the First Occupants at Knossos." In *Escaping the Labyrinth: The Cretan Neolithic in Context*, edited by V. Isaakidou and P. Tomkins, 73–89. Sheffield Studies in Aegean Archaeology 8. Oxford: Oxbow.

D'Annibale, C. 2008. "Obsidian in Transition: The Technological Reorganization of the Obsidian Industry from Petras Kephala (Siteia) Between Final Neolithic IV and Early Minoan I." In *Escaping the Labyrinth: The Cretan Neolithic in Context*, edited by V. Isaakidou and P. Tomkins, 191–200. Sheffield Studies in Aegean Archaeology 8. Oxford: Oxbow.

This content downloaded from 194.80.178.1 on Thu, 02 Mar 2017 14:56:13 UTC
All use subject to http://about.jstor.org/terms

Davaras, C., and P.P. Betancourt. 2004. *The Hagia Photia Cemetery*. Vol. 1. Prehistory Monographs 14. Philadelphia: INSTAP Academic Press.

Day, P.M., D.E. Wilson, and E. Kiriatzi. 1998. "Pots, Labels, and People: Burying Ethnicity in the Cemetery at Aghia Photia, Siteias." In *Cemetery and Society in the Aegean Bronze Age*, edited by K. Branigan, 133–49. Sheffield Studies in Aegean Archaeology 1. Sheffield: Sheffield Academic Press.

Day, P.M., L. Joyner, E. Kiriatzi, and M. Relaki. 2005. "Petrographic Analysis of Some Final Neolithic–Early Minoan II Pottery from the Kavousi Area." In *Kavousi I: The Archaeological Survey of the Kavousi Region*, edited by D.C. Haggis, 178–95. Prehistory Monographs 16. Philadelphia: INSTAP Academic Press.

Day, P.M., A. Hein, L. Joyner, V. Kilikoglou, E. Kiriatzi, A. Tsolakidou, and D. Wilson. 2012. "Petrographic and Chemical Analysis of the Pottery." In *The Hagia Photia Cemetery*. Vol. 2, *The Pottery*, edited by C. Davaras and P. Betancourt, 115–38. Prehistory Monographs 34. Philadelphia: INSTAP Academic Press.

Dimopoulou-Rethemiotaki, N., D.E. Wilson, and P.M. Day. 2007. "The Earlier Prepalatial Settlement of Poros-Katsambas: Craft Production and Exchange at the Harbour Town of Knossos." In *Metallurgy in the Early Bronze Age Aegean*, edited by P.M. Day and R.C.P. Doonan, 84–97. Sheffield Studies in Aegean Archaeology 7. Oxford: Oxbow.

Doonan, R.C.P., P.M. Day, and N. Dimopoulou-Rethemiotaki. 2007. "Lame Excuses for Emerging Complexity in Early Bronze Age Crete: The Metallurgical Finds from Poros-Katsambas and Their Context." In *Metallurgy in the Early Bronze Age Aegean*, edited by P.M. Day and R.C.P. Doonan, 98–122. Sheffield Studies in Aegean Archaeology 7. Oxford: Oxbow.

Doumas, C. 1977. *Early Bronze Age Burial Habits in the Cyclades. SIMA* 48. Göteborg: Paul Åströms Förlag.

Evans, A.J. 1921. *The Palace of Minos*. Vol. 1. London: Macmillan.

———. 1928. *The Palace of Minos*. Vol. 2, pt. 1. London: Macmillan.

Farnsworth, M. 1964. "Greek Pottery: A Mineralogical Study." *AJA* 68(3):221–28.

Galanaki, K. 2006. "Πρωτομινωικό ταφικό σύνολο στην πρώην Αμερικανική Βάση Γουρνών Πεδιάδος." In *Proceedings of the 9th International Cretological Conference*. Vol. A2, 227–42. Heraklion: Etaireia Kritikon Istorikon Meleton.

Gale, N.H., A. Papastamataki, Z.A. Stos-Gale, and K. Leonis. 1985. "Copper Sources and Copper Metallurgy in the Aegean Bronze Age." In *Furnaces and Smelting Technology in Antiquity*, edited by P.T. Craddock and M.J. Hughes, 81–102. British Museum Occasional Paper 48. London: British Museum.

Gavalas, G. 2006. "The Spindle Whorls and Related Objects." In *Markiani Amorgos, an Early Bronze Age Fortified Settlement: An Overview of the 1985–1991 Investigations*, edited by L. Marangou, C. Renfrew, C. Doumas, and G. Gavalas, 199–209. *BSA* Suppl. 40. London: British School at Athens.

Georgakopoulou, M. 2007. "Metallurgical Activities Within Early Cycladic Settlements: The Case of Daskaleio-Kavos." In *Metallurgy in the Early Bronze Age Aegean*, edited by P.M. Day and R.C.P. Doonan, 123–34. Sheffield Studies in Aegean Archaeology 7. Oxford: Oxbow.

Georgakopoulou, M., Y. Bassiakos, and O. Philaniotou. 2011. "Seriphos Surfaces: A Study of Copper Slag Heaps and Copper Sources in the Context of Early Bronze Age Aegean Metal Production." *Archaeometry* 53(1):123–45.

Georgiadis, M. 2005–2006. "The Prehistoric Finds from the Halasarna Survey Project 2003–2006, Kos: A Preliminary Report." *Aegean Archaeology* 8:7–19.

Greco, E., T. Kalpaxis, N. Papadakis, A. Schnapp, and D. Viviers. 2002. "Travaux menés en collaboration avec l'École française en 2001: Itanos (Crète orientale)." *BCH* 126:577–82.

Haggis, D.C., M. Mook, T. Carter, and L.M. Snyder. 2007. "Excavations at Azoria, 2003–2004, Part 2: The Final Neolithic, Late Prepalatial, and Early Iron Age Occupation." *Hesperia* 76:665–716.

Halstead, P. 1993. "Spondylus Shell Ornaments from Late Neolithic Thessaly, Greece: Specialized Manufacture or Unequal Accumulation." *Antiquity* 67:603–9.

Hilditch, J. 2007. "Petrological Analysis of the Ceramics from Kavos, Keros." In *Keros, Dhaskalio Kavos: The Investigations of 1987–88*, edited by C. Renfrew, C. Doumas, L. Marangou, and G. Gavalas, 238–63. McDonald Institute Monographs. Cambridge: McDonald Institute for Archaeological Research.

Hood, M.S.F. 1981. *Excavations in Chios 1938–1955: Prehistoric Emporio and Ayio Gala*. Vol. 1. *BSA* Suppl. 15. London: British School at Athens.

———. 1990a. "Autochthons or Settlers? Evidence for Immigration at the Beginning of the Early Bronze Age in Crete." In *Proceedings of the 6th International Cretological Conference*. Vol. A1, 367–75. Chania: Philologikos Syllogos "o Chrysostomos."

———. 1990b. "Settlers in Crete ca. 3000 B.C." *Cretan Studies* 2:151–58.

Johnston, P.F. 1985. *Ship and Boat Models in Ancient Greece*. Annapolis, Md.: Naval Institute Press.

Karantzali, E. 2006. "The Pottery of Phases I and II and a Note on the Pottery from the Bastion Area." In *Markiani Amorgos, an Early Bronze Age Fortified Settlement: An Overview of the 1985–1991 Investigations*, edited by L. Marangou, C. Renfrew, C. Doumas, and G. Gavalas, 101–30. *BSA* Suppl. 40. London: British School at Athens.

Kariotis, S. Forthcoming. "Νεότερα στοιχεία για την Πρώιμη Εποχή του Χαλκού στο Ακρωτήρι." In *The Aegean Early Bronze Age: New Evidence*, edited by C.G. Doumas, A. Giannikouri, and O. Kouka.

King, R., et al. 2008. "Differential Y-Chromosome Anatolian Influences on the Greek and Cretan Neolithic." *Annals of Human Genetics* 72:205–14.

Lambert, N. 1981. *La Grotte Préhistorique de Kitsos (Attique): Missions 1968–1978. L'occupation néolithique les vestiges des temps paléolithiques, de l'antiquité et d'histoire récente*. Vol. 1. Paris: Editions A.D.P.F.

Liritzis, I. 2010. "Strofilas (Andros Island, Greece): New Evidence for the Cycladic Final Neolithic Period Through Novel Dating Methods Using Luminescence and Obsidian Hydration." *JAS* 37:1367–77.

Manning, S.W. 1994. "The Emergence of Divergence: Development and Decline on Bronze Age Crete and the Cyclades." In *Development and Decline in the Mediterranean Bronze Age*, edited by C. Mathers and S. Stoddart, 221–70. Sheffield Archaeological Monographs 8. Sheffield: J.R. Collis Publications.

———. 1995. *The Absolute Chronology of the Aegean Early Bronze Age*. Monographs in Mediterranean Archaeology 1. Sheffield: Sheffield Academic Press.

This content downloaded from 194.80.178.1 on Thu, 02 Mar 2017 14:56:13 UTC
All use subject to http://about.jstor.org/terms

Marangou, C. 1996. "From Middle Neolithic to Early Bronze Age—Consideration of Early Boat Models." In *4th International Symposium on Ship Construction in Antiquity: Tropis IV*, edited by H. Tzalas, 277–93. Athens: Hellenic Institute for the Preservation of Nautical Tradition.

Melas, E.M. 1985. *The Islands of Karpathos, Saros and Kasos in the Neolithic and Bronze Age. SIMA* 68. Göteborg: Paul Åströms Förlag.

Muhly, J.D. 2002. "Early Metallurgy in Greece and Cyprus." *Der Anschnitt: Zeitschrift fur Kunst und Kultur im Bergbau* 15:77–82.

———. 2006. "Chrysokamino in the History of Early Metallurgy." In *The Chrysokamino Metallurgy Workshop and Its Territory*, edited by P.P. Betancourt, 155–77. *Hesperia* Suppl. 36. Princeton: American School of Classical Studies.

Nakou, G. 1995. "The Cutting Edge: A New Look at Early Aegean Metallurgy." *JMA* 8:1–32.

———. 2007. "Absent Presences: Metal Vessels in the Aegean at the End of the Third Millennium." In *Metallurgy in the Early Bronze Age Aegean*, edited by P.M. Day and R.C.P. Doonan, 224–44. Sheffield Studies in Aegean Archaeology 7. Oxford: Oxbow.

Nodarou, E. 2012. "Pottery Fabrics and Recipes in the Final Neolithic and Early Minoan I Period: The Analytical Evidence from the Settlement and the Rock Shelter of Kephala Petras." In *Petras, Siteia, 25 Years of Excavation and Studies, Acts of a Two-Day Conference Held at the Danish Institute, Athens*, edited by M. Tsipopoulou, 81–8. Aarhus and Athens: Aarhus University Press and Danish Institute at Athens.

Nowicki, K. 1999. "Final Neolithic Refugees or Early Bronze Age Newcomers? The Problem of Defensible Sites in Crete in the Late Fourth Millennium B.C." In *Meletemata: Studies in Aegean Archaeology Presented to Malcom H. Wiener as He Enters His 65th Year*, edited by P.P. Betancourt, V. Karageorghis, R. Laffineur, and W.-D. Niemeier, 575–81. *Aegaeum* 20. Liège and Austin: Université de Liège and University of Texas at Austin.

———. 2002. "The End of the Neolithic in Crete." *Aegean Archaeology* 6:7–72.

Papadatos, Y. 2007a. "Beyond Cultures and Ethnicity: A New Look at Material Culture Distribution and Inter-regional Interaction in the Early Bronze Age Southern Aegean." In *Mediterranean Crossroads*, edited by S. Antoniadou and A. Pace, 419–51. Oxford: Pierides Foundation.

———. 2007b. "The Beginning of Metallurgy in Crete: New Evidence from the FN–EM I Settlement at Kephala Petras, Siteia." In *Metallurgy in the Early Bronze Age Aegean*, edited by P.M. Day and R.C.P. Doonan, 154–67. Sheffield Studies in Aegean Archaeology 7. Oxford: Oxbow.

———. 2008. "The Neolithic-Early Bronze Age Transition in Crete: New Evidence from the Settlement at Petras Kephala, Siteia." In *Escaping the Labyrinth: The Cretan Neolithic in Context*, edited by V. Isaakidou and P. Tomkins, 258–72. Sheffield Studies in Aegean Archaeology 8. Oxford: Oxbow.

———. 2012a. "Back to Beginnings: The Earliest Habitation at Petras on the Basis of the Evidence from the FN–EM I Settlement on Kephala." In *Petras, Siteia, 25 Years of Excavation and Studies, Acts of a Two-Day Conference Held at the Danish Institute, Athens*, edited by M. Tsipopoulou, 69–79. Aarhus and Athens: Aarhus University Press and Danish Institute at Athens.

———. 2012b. "An Early Minoan Boat Model from Kephala Petras, Siteia." In *PHILISTOR: Studies in Honor of Costis Davaras*, edited by E. Mantzourani and P.P. Betancourt, 155–59. Philadelphia: INSTAP Academic Press.

Papadatos, Y., and C. Sofianou. 2013. "A Prepalatial Tholos Tomb at Mesorrachi Skopi, near Siteia, East Crete." *Aegean Archaeology* 10:7–31.

Papadatos, Y., P. Tomkins, E. Nodarou, and Y. Iliopoulos. Forthcoming. "The Beginning of Early Bronze Age in Crete: Continuities and Discontinuities in the Ceramic Assemblage at Kephala Petras, Siteia." In *The Aegean Early Bronze Age: New Evidence*, edited by C.G. Doumas, A Giannikouri, and O. Kouka.

Papastamataki, A. 1998. "Μεταλλουργικές δραστηριότητες στην Κέα κατά την αρχαιότητα, νεότερα στοιχεία." In *Kea-Kythnos: History and Archaeology*, edited by L.G. Mendoni and A. Mazarakis-Ainian, 759–64. Meletemata 27. Paris and Athens: De Boccard and Research Centre for Greek and Roman Antiquity, National Hellenic Research Foundation.

Pernier, L. 1935. *Il Palazzo Minoico di Festòs*. Vol. 1. Rome: La Libreria dello Stato.

Petrakos, V.C. 2010. "Το Έργον της Αρχαιολογικής Εταιρείας κατά το 2009." *Ergon* 56:1–102.

Renfrew, C. 1972. *The Emergence of Civilisation: The Cyclades and the Aegean in the Third Millennium BC*. London: Methuen.

Sackett, L.H., M.R. Popham, and P.M. Warren. 1965. "Excavations at Palaikastro, VI." *BSA* 60:248–315.

Sampson, A. 1984. "The Neolithic of the Dodecanese and Aegean Neolithic." *BSA* 79:239–49.

———. 1987. Η Νεολιθική περίοδος στα Δωδεκάνησα. Athens: Tameio Archaiologikon Poron ke Apallotrioseon.

———. 1988. *Η Νεολιθική κατοίκηση στο Γυαλί της Νισύρου*. Athens: Ευβοϊκή Αρχαιόφιλος Εταιρεία.

———. 1992. "Late Neolithic Remains at Tharrounia, Euboea: A Model for the Seasonal Use of Settlements and Caves." *BSA* 87:61–101.

———. 1993. *Skoteini, Tharrounia: The Cave, the Settlement and the Cemetery*. Athens: Department of Palaeoanthropology.

———. 2002. *The Neolithic Settlement at Ftelia, Mykonos*. Rhodes: University of the Aegean, Department of Mediterranean Studies.

Schlager, N. 2001. "Pleistozäne, neolithische, bronzezeitliche und rezente Befunde und Ruinen im fernen Osten Kretas." *ÖJh* 70:157–220.

Sherratt, S. 2000. *Catalogue of Cycladic Antiquities in the Ashmolean Museum: The Captive Spirit*. Oxford: Oxford University Press.

Soles, J.S. 2004. "The 2004 Greek-American Excavations at Mochlos." *KENTRO, the Newsletter of the INSTAP Study Center for East Crete* 7:2–5.

Soles, J.S., and C. Davaras. 1996. "Excavations at Mochlos 1992–3." *Hesperia* 65:175–230.

Sotirakopoulou, P.I. 1999. *Ακρωτήρι Θήρας: Η Νεολιθική και η Πρώιμη Εποχή του Χαλκού επί τη βάσει της κεραμικής*. Athens: Η Εν Αθήναις Αρχαιολογική Εταιρεία.

———. 2008. "Akrotiri Thera: The Late Neolithic and Early Bronze Age Phases in the Light of Recent Excavations at the Site." In *Horizon, A Colloquium on the Prehistory of the Cyclades*, edited by N. Brodie, J. Doole, G. Gavalas, and C. Renfrew, 121–34. McDonald Prehistory Monographs. Cambridge: McDonald Institute for Archaeological Research.

Stos-Gale, Z.A., and N.H. Gale. 2003. "Lead Isotopic and

This content downloaded from 194.80.178.1 on Thu, 02 Mar 2017 14:56:13 UTC
All use subject to http://about.jstor.org/terms

Other Isotopic Research in the Aegean." In *METRON: Measuring the Aegean Bronze Age. Proceedings of the 9th International Aegean Conference*, edited by K. Foster and R. Laffineur, 83–102. *Aegaeum* 24. Liège and Austin: Université de Liège and University of Texas at Austin.

Televantou, C.A. 2008. "Strofilas: A Neolithic Settlement on Andros." In *Horizon: A Colloquium on the Prehistory of the Cyclades*, edited by N. Brodie, J. Doole, G. Gavalas, and C. Renfrew, 43–53. McDonald Prehistory Monographs. Cambridge: McDonald Institute for Archaeological Research.

Theodoropoulou, T. 2011. "*Spondylus gaederopus* in Aegean Prehistory: Deciphering Shapes from Northern Greece." In *Spondylus in Prehistory, New Data and Approaches: Contribution to the Archaeology of Shell Technologies*, edited by F. Ifantidis and M. Nikalaidou, 93–104. *BAR-IS* 2216. Oxford: Archaeopress.

Todaro, S. 2005. "EM I–MM IA Ceramic Groups at Phaistos: Towards the Definition of a Prepalatial Sequence in South Central Crete." *Creta Antica* 6:12–54.

———. 2012. "Craft Production and Social Practices at Prepalatial Phaistos: The Background to the First 'Palace.'" In *Back to the Beginning: Reassessing Social and Political Complexity on Crete During the Early and Middle Bronze Age*, edited by I. Schoep, P. Tomkins, and J. Driessen, 195–235. Oxford: Oxbow.

Todaro, S., and S. Di Tonto. 2008. "The Neolithic Settlement at Phaistos Revisited: Evidence for Ceremonial Activity on the Eve of the Bronze Age." In *Escaping the Labyrinth: The Cretan Neolithic in Context*, edited by V. Isaakidou and P. Tomkins, 177–90. Sheffield Studies in Aegean Archaeology 8. Oxford: Oxbow.

Tomkins, P. 2001. "The Production, Circulation and Consumption of Ceramic Vessels at Early Neolithic Knossos, Crete." Ph.D. diss., University of Sheffield.

———. 2007. "Neolithic: Strata IX–VIII, VII–VIB, VIA–V, IV, IIIB, IIIA, IIB, IIA and IC Groups." In *Knossos Pottery Handbook: Neolithic and Bronze Age (Minoan)*, edited by N. Momigliano, 9–48. *BSA* Studies 14. London: British School at Athens.

———. 2008. "Time, Space and the Reinvention of the Cretan Neolithic." In *Escaping the Labyrinth: The Cretan Neolithic in Context*, edited by V. Isaakidou and P. Tomkins, 22–51. Sheffield Studies in Aegean Archaeology 8. Oxford: Oxbow.

———. 2009. "Domesticity by Default: Ritual, Ritualisation, and Cave Use in the Neolithic Aegean." *OJA* 28(2):125–53.

———. 2010. "Neolithic Antecedents." In *The Oxford Handbook of the Bronze Age Aegean*, edited by E. Cline, 31–49. New York: Oxford University Press.

———. 2012. "Behind the Horizon: Reconsidering the Genesis and Function of the 'First Palace' at Knossos (Final Neolithic IV–Middle Minoan IB)." In *Back to the Beginning: Reassessing Social and Political Complexity on Crete During the Early and Middle Bronze Age*, edited by I. Schoep, P. Tomkins, and J. Driessen, 32–80. Oxford: Oxbow.

———. 2013. "Landscapes of Ritual, Identity, and Memory: Reconsidering Neolithic and Bronze Age Cave Use in Crete, Greece." In *Sacred Darkness: A Global Perspective on the Ritual Use of Caves*, edited by H. Moyes, 59–79. Boulder: University Press of Colorado.

———. Forthcoming. "Inspecting the Foundations: The Early Minoan Project in Review." In *From the Foundations to the Legacy of Minoan Society: A Round Table in Honour of Professor K. Branigan, January 29th–31st 2010*, edited by M. Relaki and Y. Papadatos. Sheffield Studies in Aegean Archaeology 12. Oxford: Oxbow.

Tomkins, P., and P.M. Day. 2001. "Production and Exchange of the Earliest Ceramic Vessels in the Aegean: A View from Early Neolithic Knossos, Crete." *Antiquity* 75:259–60.

Tomkins, P., and I. Schoep. 2010. "The Early Bronze Age: Crete." In *The Oxford Handbook of the Bronze Age Aegean*, edited by E. Cline, 66–82. New York: Oxford University Press.

Tomkins, P., P.M. Day, and V. Kilikoglou. 2004a. "Knossos and the Early Neolithic Landscape of the Herakleion Basin." In *Knossos: Palace, City, State*, edited by G. Cadogan, E. Hatzaki, and A. Vasilakis, 51–9. *BSA* Studies 12. London: British School at Athens.

Tomkins, P., L. Kokkinaki, S. Soetens, and A. Sarris. 2004b. "Settlement Patterns and Socio-economic Differentiation in East Crete in the Final Neolithic." Poster presented at "Computer Applications and Quantitative Methods in Archaeology: Beyond the Artifact. Digital Interpretation of the Past," 13–17 April, Prato, Italy, www.ims.forth.gr/publications.html.

Tsipopoulou, M. 1989. *Archaeological Survey at Aghia Photia, Siteia. SIMA-PB* 76. Göteborg: Paul Åströms Förlag.

———. 1990. "Νέα στοιχεία για τη Μινωική κατοικηση στην περιοχή της πόλης της Σητείας." In *Proceedings of the 6th International Cretological Congress*. Vol. A2, 305–21. Chania: Philologikos Syllogos "o Chrysostomos."

———. 1999. "Before, During, After: The Architectural Phases of the Palatial Building at Petras, Siteia." In *Meletemata: Studies in Aegean Archaeology Presented to Malcom H. Wiener as He Enters His 65th Year*, edited by P.P. Betancourt, V. Karageorghis, R. Laffineur, and W.-D. Niemeier, 847–55. *Aegaeum* 20. Liège and Austin: Université de Liège and University of Texas at Austin.

———. 2002. "Petras Siteia: The Palace, the Town, the Hinterland and the Protopalatial Background." In *Monuments of Minos, Rethinking the Minoan Palaces*, edited by J. Driessen, I. Schoep, and R. Laffineur, 133–44. *Aegaeum* 23. Liège and Austin: Université de Liège and University of Texas at Austin.

———. 2007. "Aghia Photia, Kouphota: A Centre for Metallurgy in the Early Minoan Period." In *Metallurgy in the Early Bronze Age Aegean*, edited by P.M. Day and R.C.P. Doonan, 135–45. Sheffield Studies in Aegean Archaeology 7. Oxford: Oxbow.

———. 2010. "Προϊστορική ταφική βραχοσκεπή στον Πετρά Σητείας—Πρώτη ανακοίνωση." In *Archaeological Work in Crete, Proceedings of the 1st Meeting, Rethymnon 28–30 November 2008*, edited by M. Andrianakis and I. Tzachili, 121–33. Rethymnon: University of Crete, Faculty of Letters Publications.

Vagnetti, L. 1973. "L'insediamento neolitico di Festos." *ASAtene* 50–51:7–138.

———. 1996. "The Final Neolithic: Crete Enters the Wider World." *Cretan Studies* 5:29–39.

Vagnetti, L., A. Christopoulou, and I. Tzedakis. 1989. "Saggi negli stati Neolitici." In *Scavi a Nerokourou, Kydonias*, edited by I. Tzedakis and A. Sacconi, 9–97. Recherche Greco-Italiane in Creta Occidentale 1. Rome: Edizioni dell'Ateneo.

Vaughan, S.J. 1990. "Petrographic Analysis of the Early Cycladic Wares from Akrotiri, Thera." In *Thera and the Aegean World III: Proceedings of the Third International Con-*

This content downloaded from 194.80.178.1 on Thu, 02 Mar 2017 14:56:13 UTC
All use subject to http://about.jstor.org/terms

gress, Santorini, Greece, 3–9 September 1989. Vol. 1, *Archaeology*, edited D.A. Hardy, C.G. Doumas, J.A. Sakellarakis, and P.M. Warren, 470–87. London: Thera Foundation.

———. 2006. "Macroscopic and Petrographic Studies of Pottery from Markiani on Amorgos." In *Markiani Amorgos: An Early Bronze Age Fortified Settlement. An Overview of the 1985–1991 Investigations*, edited by L. Marangou, C. Renfrew, C. Doumas, and G. Gavalas, 99–101. *BSA* Suppl. 40. London: British School at Athens.

———. 2007. "Material and Technological Analysis of the Early Bronze Age Pottery." In *Excavations at Phylacopi in Melos 1974–77*, edited by C. Renfrew, N. Brodie, C. Morris, and C. Scarre, 110–25. *BSA* Suppl. 42. London: British School at Athens.

Vialou, D. 1981. "Objets de parure." In *La Grotte Préhistorique de Kitsos (Attique): Missions 1968–1978. L'occupation néolithique les vestiges des temps paléolithiques, de l'antiquité et d'histoire récente.* Vol. 1, edited by N. Lambert, 399–419. Recherche sur les grandes civilisations 7. Paris: Editions A.D.P.F. and École Française d'Athènes.

Vokotopoulos, L. 2000. "Οχυρές θέσεις της Τελικής Νεολιθικής και Πρωτομινωικής Ι στην περιοχή της Ζάκρου." In *Proceedings of the 8th International Cretological Conference.* Vol. A1, 129–46. Heraklion: Etaireia Kritikon Istorikon Meleton.

Warren, P. 1973. "Crete, 3000–1400 B.C.: Immigration and the Archaeological Evidence." In *Bronze Age Migrations in the Aegean: Archaeological and Linguistic Problems in Greek Prehistory*, edited by R.A. Crossland and A. Birchall, 41–7. Park Ridge, N.J.: Noyes Press.

Whitelaw, T. 2004. "Alternative Pathways to Complexity in the Southern Aegean." In *The Emergence of Civilisation Revisited*, edited J.C. Barrett and P. Halstead, 232–56. Sheffield Studies in Aegean Archaeology 6. Oxford: Oxbow.

Whitley, J., M. Prent, and S. Thorne. 1999. "Praisos IV: A Preliminary Report on the 1993 and 1994 Survey Seasons." *BSA* 94:215–64.

Wilson, D.E. 1994. "Knossos Before the Palaces: An Overview of the Early Bronze Age (EM I–EM III)." In *Knossos, a Labyrinth of History: Papers Presented in Honour of Sinclair Hood*, edited by D. Evely, H. Hughes-Brock, and N. Momigliano, 23–44. Athens: British School at Athens.

———. 1999. *Ayia Irini: Periods I–III. The Neolithic and Early Bronze Age Settlements.* Keos 9. Mainz: Philipp von Zabern.

Wilson, D.E., and P. Day. 1994. "Ceramic Regionalism in Prepalatial Central Crete: The Mesara Imports from EM IB to EM IIA Knossos." *BSA* 89:1–87.

Wilson, D.E., P.M. Day, and N. Dimopoulou-Rethemiotaki. 2004. "The Pottery from Early Minoan I–IIB Knossos and Its Relations with the Harbour Site of Poros-Katsambas." In *Knossos: Palace, City, State*, edited by G. Cadogan, E. Hatzaki, and A. Vasilakes, 67–74. *BSA* Studies 12. London: British School at Athens.

———. 2008. "The Gateway Port of Poros-Katsambas: Trade and Exchange Between North-Central Crete and the Cyclades in EB I–II." In *Horizon, A Colloquium on the Prehistory of the Cyclades*, edited by N. Brodie, J. Doole, G. Gavalas, and C. Renfrew, 261–70. McDonald Prehistory Monographs. Cambridge: McDonald Institute for Archaeological Research.

Zachos, K.L. 1990. "The Neolithic Period in Naxos." In *Cycladic Culture: Naxos in the 3rd Millennium BC*, edited by L. Marangou, 29–38. Athens: Nicholas P. Goulandris Foundation, Museum of Cycladic Art.

———. 1999. "Zas Cave on Naxos and the Role of Caves in the Aegean Late Neolithic." In *Neolithic Society in Greece*, edited by P. Halstead, 153–63. Sheffield Studies in Aegean Archaeology 2. Sheffield: Sheffield Academic Press.

———. 2007. "The Neolithic Background: A Reassessment." In *Metallurgy in the Early Bronze Age Aegean*, edited by P.M. Day and R.C.P. Doonan, 168–206. Sheffield Studies in Aegean Archaeology 7. Oxford: Oxbow.

This content downloaded from 194.80.178.1 on Thu, 02 Mar 2017 14:56:13 UTC
All use subject to http://about.jstor.org/terms