University of Wales Trinity Saint David

School of Engineering - M.Sc. Computer Networks and Cyber Security

Security in IoT based Smart Farming

Research Methods and Professional Development

Presented by: Aneena Elizabeth Saju

Student Number: 2105165

TABLE OF CONTENTS

1. INTRODUCTION 4

2. LITERATURE REVIEW 6

3. CONCEPT 12

3.1 Smart Farming 12

3.2 Internet of Things 12

3.3 Intelligent Agriculture 13

4. METHODOLOGY 14

4.1 Accumulation of data 14

4.2 Implementation 14

4.3 Hardware Devices 15

NodeMCU V2 ESP8266 15

Sensor devices 15

4.4 I2C Communication Protocol 16

5. EXPERIMENTAL ANALYSIS 17

6. RESULTS 19

7. EVALUATION 21

REFERENCES 23

Table of Figures

Figure 1: IoT solution architecture that includes 4 layers: perception, transport, processing and application, based on [45] [46]....13
Figure 2: Schematic diagram of the proposed Smart farming system....14
Figure 3: NodeMCU V2 and pin diagram....15

1. INTRODUCTION

Nowadays, there is growing global demand for food with the increasing population, and agriculture faces many trials: feeding the people, providing a source of income for farmers, and safeguarding the environment. According to the statistics, by 2050, the world population is expected to reach 9.7 billion, roughly an increase of 20% from the current proportion [1]. Nearly the entire stated increase of population is predicted to happen amidst developing countries [2]. On the opposite side, urbanization is expected to keep up at an increasing pace, until 2050 around 68% of the population is expected to be urban (presently 49%) [3]. Moreover, there will be an increase in income level, which will increase the demand for food, mostly in developing countries. Subsequently, people will start being more careful about the food quality and their diet; hence, their preferences can shift from wheat and cereals to legumes and, eventually, to meat. To feed this large, urban and rich population, the production of food should increase by 2050 [4] [5]. Specifically, the present annual production of wheat of 2.1 billion tonnes needs to grow to almost 3 billion tonnes, and the yearly production of meat should expand even more by at least 200 million tonnes to meet the increasing demand of the population of 470 million tonnes [6] [7].

When food crops are exploited for biofuel production, bioenergy, and other industrial uses, food security is jeopardised. Agricultural supplies, which are already scarce, are put under even more strain as a result of these demands [8]. Despite this, only a tiny fraction of the earth's surface is suitable for agricultural uses due to several restrictions such as temperature, climate, topography, and soil quality, and even the most optimal locations are not constant. Nevertheless, political and economic factors such as land and climate patterns, as well as population density, govern the amount of agricultural land that is available, while increasing urbanisation continues to threaten the availability of productive land [8]. Farmers must visit agriculture locations on a frequent basis during the crop cycle to have a better understanding of crop conditions, according to traditional farming methods. Therefore, smart agriculture is critical, as monitoring and analysing crop statuses consumes 70% of farm time rather than actual field work. [9].

Precision agriculture and smart farming will be required to meet and overcome many of these problems. Precision agriculture (PA) is becoming more popular as a combination of information, communication, and control technology in agriculture [10]. Precision agriculture refers to the practise of monitoring, quantifying, and acting to agricultural variability. Smart farming, on the other hand, expands the precision agriculture idea by incorporating data

context, condition, and location awareness into real-time management and decision-making duties. Smart farming is a result of the rapid growth of Internet of Things and Cloud Computing technologies. Agricultural devices and equipment based on the Internet of Things are now widely employed in crop farming and animal rearing [11] [12]. Furthermore, smartphone apps, databases, and cloud-based technology assist farmers in their daily chores. Every second, such devices create a massive amount of data. The process of handling big data, which includes data collecting, processing, analysis, and visualisation, is extremely difficult and complicated, necessitating new architectural concepts and application tools [12].

This research proposal is based on cloud-based smart farming system because of its growing importance in the European Union (EU) [13]. Smart farming aims to boost productivity and improve end product quality while lowering production costs. Hand-operated greenhouses still have several limitations, such as visual inspection of plant development, hand-operated plant watering, turning on and off temperature controls, and hand-operated fertiliser and pesticide spraying. It takes time, is prone to human mistake, and hence is less precise and dependable. As a result, a fully automated greenhouse is the ideal option. It reduces human engagement to the smallest amount feasible, removing the system's challenges. The goal of an automated greenhouse is to monitor and manage the climatic conditions that directly or indirectly affect plant development and, as a result, the product [14]. In an automated smart farming, data like, soil moisture, ambient air temperature, humidity, pressure, is collected and can be displayed in the form of a chart. By doing this, farmers can plan ahead of time using the data representation the amount of water needed for each crop, the temperature required, etc so as be more economic. Because of the various technologies used in Smart Farming, if experts from other fields cooperate there could be an acceleration in the development of novel agricultural approaches. The implementation of Smart Farming could help the EU to increase agricultural output while also maintaining the sector's long-term viability. The EU is sponsoring cutting-edge advancement in this regard, with numerous academics around Europe focusing on novel projects with the goal of ushering agriculture into a new era. We are at an era where excellent practises must be encouraged in order to provide the foundations for future Smart Farming [13].

2. LITERATURE REVIEW

Bringing substantial improvements to the way agriculturists and farmers work on the ground, smart farming aspires to be the next agricultural revolution. Every element of traditional farming processes may be significantly transformed by incorporating the newest sensor, cloud engineering and IoT technology into agricultural practises [8].

[12] Amine Roukh, S A Mahmoudi, F N Fote, S Mahmoudi talks about WALLeSMART, a cloud-based framework intended to develop smart farming system in Belgium's Wallonia area. The system presents an architecture to meet the issues of large-scale data collection, processing, and visualisation in batch and real-time. This system has set four primary objectives to attain the goal: (i) doing research into current big data processing architectures, (ii) selecting the best architecture for their use case, (iii) developing the frontend and backend parts of the stack, using real data sets from dairy farms and weather stations in batch and real-time, and (iv) visualising those data via a web application. A Roukh tells that the use of network technologies, IoT, and cloud computing in precision agriculture allows the generation of large amounts of data. To do this, raw data from many sources must first be digested, merged, and stored in a Data Lake, which is a centralised storage repository. Next, big data solutions for processing this data must be suggested, with long-running batch operations and real-time jobs filtering, aggregating, and generally preparing the data for the study. The last phase is to provide data insights through reporting and analysis duties.

[13] V Moysiadis, P Sarigiannidis, V Vitsas, A Khelifi talks about smart farming in Europe using innovative solutions like (i) unmanned aerial vehicles (UAVs) which gives the farmers a bird’s eye view i.e., the farmers will be able to see the many acres of land in less time, of their crop fields in shorter time with low cost. By using this the farmers can get an overall estimate of the problems without wasting any time walking around the field. (ii) unmanned ground vehicle (UGVs), this can do may activities like seeding, harvesting, weeding, spraying, pruning and crop monitoring. To make this system more effective V Moysiadis tells that it should be equipped with various instruments like camera, sensors. This system can help reduce labour and operational cost. (iii) wireless sensor networks (WSNs), various wireless technologies are used Bluetooth Low Energy (BLE), WiFi, 3G/4G, SigFox, Narrowband IoT (NB-IoT), and LoRa. Sensors are also used, for measuring work on batteries and for transmitting on long distance, for this low energy networks are suitable. Complex solutions integrating two or more

of the aforesaid technologies, such as collaboration between UAVs and UGVs, is a prevalent issue that will further increase agriculture's sustainability.

Green House, according to [15] Sheetal Vatari, Aarti Bakshi, and Tanvi Thakur, is the finest approach for controlling and managing all these issues. It's more necessary to find a strategy that allows for precise analysis and control in order to create a healthy atmosphere. Large regions covered by sensor networks can be used to create a greenhouse with the precise climate that different crops require. This environment is created via the application of two technologies: it and cloud computing. We can operate equipment or meet any environmental demands utilising IOT (Internet of Things) and the cloud, which offers storage.

According to [16] Ravi Kishore Kodali, Vishal Jain, and Sumit Karagwal, their work gives a prototype of a smart green house that allows farmers to carry out farm operations automatically without relying on manual inspection. The watering of farm fields is done with automated drip irrigation, which works according to the soil moisture threshold established so that the plants get the right amount of water.

The smart greenhouse ecosystem monitoring control system was created by WeiminQiu, Linxi Dong, Fei Wang, and Haixia Yan [17] and is based on ZigBee and embedded technologies. Upper machine processors, environmental factors acquisition nodes, and intelligent control terminal block are the three primary components of this system. The S3C24 microprocessor with the ARM920T core, power, clock, and reset circuits, LCD touch screen, intelligent control terminal module, ZigBee coordinator, and environmental variables detection terminal nodes make up most of the device. This system displays real-time data on greenhouse environment parameters, performs data queries, and sets the warning value.

i-learning IoT: A smart self-learning technology for home automation that makes use of the Internet of Things. Vishwajeet Hari Bhide and Sanjeev Wagh [18] suggested an effective IoT solution for monitoring and managing household appliances through the Internet. House automation is the automation of routine tasks within the home. It is now feasible to create a flexible and low-cost home automation system because to enormous advancements in wireless sensor networks and other processing technologies. However, there is no solution on the market that effectively provides home automation as well as device problem detection. In this system, predictions are made to determine the needed solution if a problem develops in any of the

system's associated devices. Wi-Fi allows you to operate your household appliances from your smartphone. The server system is a Raspberry Pi, and the communication protocol is Wi-Fi.

Home automation monitoring and control system based on the Internet of Things, D. Pavithra and Ranjith Balakrishnan [19] describe their system's characteristics. The system was built utilising Wi-Fi as the communication protocol and a Raspberry Pi as the server system. The user will interact with the system directly via a web-based interface, while household appliances such as lights, fans, and door locks will be managed remotely via a simple webpage. Another element that improves the aspect of protection from fireplace mishaps is its capacity to investigate the smoke so that, in the case of a fire, an alerting message and an image are sent to the Smartphone. The server is connected to relay hardware circuits that control the household appliances. The user can choose the right device thanks to the connection with the server. The user can choose the right device thanks to the connection with the server. The server connects with the relays that are assigned to it. Even if the web connection or server is unavailable, the embedded system board will manage and run the appliances on a domestic level.

[20] Emerson Navarro, Nuno Costa and António Pereira their work shows a systematic view of the adoption of IoT in smart agriculture and describes the main components and the application of IoT solution in agriculture. This paper showed about a change that can occur in the recent works about the treatment of data, i.e., although previous research revealed that most decision support systems relied on simple processing mechanisms to handle real-time data, more recent research revealed an increasing number of management systems that rely on complementary technologies such as cloud and big data computing to process large amounts of data. Further their research showed that the use of artificial intelligence and image processing in smart farming would be better and is increasing widely. Also, in crop monitoring, IoT for smart farming was the most popular among the listed applications. Their research also revealed that different types of network protocols may be used for the IoT systems for smart farming. The different types of network connection that could be used for IoT solutions for smart farming indicated that for interior settings wired solutions were used, i.e., greenhouse, but for wireless networks both indoor and outdoor scenarios were employed, i.e., arable land, orchards. This paper also talks about how IoT solutions for smart farming are becoming more important. The future scope of smart farming could by integrating additional relevant publications and complementing assessments of project costs, usability, and geographical issues inherent in IoT applications. The paper tells another important future research direction

could be an examination of the use of edge and fog computing in smart agriculture as a means of overcoming the challenges associated with traditional centralised cloud solutions, such as high communication latencies, a lack of support for real-time reaction to detected events, large bandwidths, and so on.

[21] P. Dedeepya, U. S. A. Srinija, M. Gowtham Krishna, G. Sindhusha, T. Gnanesh, their paper says proper environmental conditions are required in greenhouses for maximum plant development and health. Crops can be lost if the temperature, humidity, and soil moisture are not properly balanced. To increase greenhouse productivity, we must monitor and maintain the right mix of all the above. Based on the Internet of Things Greenhouse can be monitored and controlled from the workplace, on a trip, or anyplace, ensuring that our plants are always with us. The suggested system, in addition to standard greenhouses, can: control temperature and humidity, Manage and monitor remotely automatically. As a result, the crop is protected from injury. Our automatic system will then send a warning if any of the circumstances go outside of the recommended ranges, maximising fruit and vegetable productivity.

Zhao [22] recommended combining IoT technology with remote access and wireless communication in real-time agriculture crop production over the internet, as well as an information management system to handle crop information for research purposes. Ning H., Wang Z. [23] have classified IoT into two categories: unit IoT, ubiquitous IoT. A man-like brain model is used in unit IoT, and a worldwide integration of unit IoT is referred to as ubiquitous IoT. A social organisation framework model for the future relationship and growth of IoT is built using this combination. Yane [24] has highlighted the ways of creating the IoT architecture for agriculture by utilising the Farm information technology idea and studying the characteristics of agriculture data. Zhou [25] released research on using sensor networks in agriculture for crop monitoring using IoT, and the design is evaluated using features such as dependability, cost, scalability, and management to ensure good design. Qian S. [26] pioneered the concept of merging Iot systems with crop development, allowing the system to be adaptable and intelligent through field testing. They also discussed the challenges of designing an intelligent system. Bing F. [27] offered research on an IoT-based intelligent system employing a few techniques such as sensors, RFID, and others to build a decision-based system by regulating and monitoring the plant environment. Bing F. [27] have looked at IoT devices, architecture, services, and protocols, all of which are geared to collect real-time data and provide services to consumers. Wang C. [28] The impact of cloud computing and IoT on

traditional systems was explored, as well as the techniques of innovation to achieve the goal of IoT with automation by diversifying into advanced systems that cope with complexity and resilience. Lee M. [29] built an IoT-based agriculture production system to handle supply chain demands and a monitoring system to analyse crop environment, as well as decision-making processes. Tuli A. [30] offered "Agri-Assistant" design for modernising India's agricultural industry via cloud deployment, which offers farmers in remote locations with knowledge on farming and associated practises. Kiljander J. [31] created two design concepts for IoT and ubiquitous computing, as well as a novel architecture for IoT and ubiquitous computing that provides organisations a lot of possibilities in virtual computing platforms. Alam K. M. [32] highlighted the achievements of open IoT systems in agriculture for confirming, analysing, and researching crop growth from sensors and the environment in order to make appropriate decisions.

Jayaraman P. [33] The study was given by defining agricultural demands based on restrictions or factors including weather prediction, crop cultivation, rural development, and industry classification, all of which are important to IoT approaches and the relevance of IoT to poverty reduction. Kalezhi J. and Dlodlo N. [34] investigated how top-down design concepts may be used to reduce investments in IoT, which is especially useful for the creation of smart cities. Ganchev [35] proposed a distributed IoT architecture known as distributed internet-like architecture of things, which is used to handle security, heterogeneity, and other issues, as well as the service supplied for automation and decision making across multiple domains. Anand Nayyar and Er. Vikram Puri [36], the importance of IoT and cognitive networks was explored. They exhibited IoT-based smart farming techniques and delivered a ground-breaking IoT-enabled smart agriculture stick that tracks crop progress. By collecting live temperature data and soil moistures, the stick architecture illustrated in their research monitors the environment, enabling agricultural techniques, and improving total output and production quality. They used Aurdino technology to make sensor and real-time data streams from Thingsspeak.com easier to process. Jiangfeng Cheng [37], smart manufacturing based on cyber-physical systems was discussed (CPMS). Industrial internet of things (IIoT), which includes elements like automation, smart connectivity, real-time monitoring, and collaborative control, is one of the major problems in CPMS. According to them, 3rd and 4th generation mobile phones do not meet CPMS' standards in terms of high data rates, reliability, latency, and other factors. They proposed the potential of 5G in enabling IIoT and CPMS. Enhanced mobile broadband (eMBB), massive machine type communication (mMTC), and ultra-reliable and low latency

communication are three application types of 5G technology that might help IIoT and CPMS in industrial technologies (URLLC). The challenges of 5G technology are also discussed.

3. CONCEPT

To better comprehend the issues surrounding the usage of IoT in agriculture in the twenty-first century, it is necessary to go deeper into several fundamental principles.

3.1 Smart Farming

The use of auxiliary technology to agricultural production practises in order to decrease waste and boost output is known as smart farming. Intelligent farms use technology resources to help with plantation monitoring, soil management, irrigation, pest control, delivery tracking, and other aspects of the production process [38]. Unmanned flying equipment, video cameras, agricultural information management systems, global positioning systems (GPS), and communication networks are examples of such resources [39]. A significant concern is the inclusion of technology resources into the agricultural production process. The integration of technology resources into the agricultural production process is a critical issue. By 2023, the precision agricultural business is expected to bring in $10 billion in income [40], technology providers, agricultural equipment and machinery providers, farmers, and anyone working in this industry may benefit. Smart farms are also expected to increase food output by improving fertiliser delivery to the soil, lowering pesticide use, and reducing irrigation water consumption [41].

3.2 Internet of Things

The Internet of Things (IoT) is a system of interconnected intelligent objects that can interact with one another and provide meaningful data about their surroundings. In the context of IoT, practically any device that can connect to the Internet, such as household appliances, electronics, furniture, agricultural or industrial equipment, and even individuals, may be considered a "thing" [42].

Although the concept of the Internet of Things is not recent, its adoption has increased in recent years as a result of advancements in supporting technologies such as improvements in hardware (resulting in smaller and lower power consumption), developments in connectivity with the Internet and among devices via wireless connections, cloud computing, artificial intelligence, and big data. All these technological components work together to establish a network of devices that can share data and information while also responding actively to network inputs [43].

According to [44], the architecture of IoT systems is analogous to that of traditional computer systems, but it must account for the characteristics of this paradigm, such as the devices limited processing capabilities, identification, detection and control of remote items.

3.3 Intelligent Agriculture

Figure 1 depicts the IoT architecture presented in [45] and [46], which consists of four levels that address the essential components of an IoT solution: devices, network, services, and application. The perception layer is concerned with the solution's physical devices and how they interact with one another and with the transport layer. These gadgets oversee gathering data and allowing "things" to communicate with one another.

To create sensor nodes and communication gateways, commercial solutions—such as UAV devices [47], sensor nodes [48]—or innovative devices, designed using components such sensors and single-board computers (SBCs)—such as Arduino or Raspberry Pi—can be used. Sensor nodes are utilised to track plant illnesses [49], adjust environmental factors in greenhouses [50], and monitor exterior crops [51] [52] [53].

The transport layer mediates the interaction between perception layer devices and processing layer services, which can take several forms, including communicating directly among both sensor nodes and a data processing framework (such as FIWARE [54], SmartFarmNet [55], and Thinger.io [56]) or a gateway that, in addition to intermediating communication among sensor nodes and the internet, also acts as a data aggregator.

Application	Plantation monitoring, disease controlling, irrigation, etc.
Processing	Data storage, data filtering, data processing and analysis services, etc.
Transport	Network protocols, application protocols, etc.
Perception	Sensor nodes, GPS, etc.

Figure 1: IoT solution architecture that includes 4 layers: perception, transport, processing and application, based on [45] [46]

4. METHODOLOGY

4.1 Accumulation of data

The primary area of research is to find the threshold of the content needed for each crop, i.e., soil moisture, air temperature, humidity, this will be the baseline reading to model the system. Different parameters should be considered while collecting data to find the upper threshold and lower threshold each needed for a crop. Some of the parameters that can be used as air temperature, soil temperature, soil moisture, atmospheric pressure, humidity, etc. Using these data, a smart greenhouse can be developed. These datas can be send to a cloud platform that can encrypt and store the data for future reference and use. This data will give an understanding of the amount of required quantity needed to maintain the growth of a crop. The collected data can be viewed in the form of charts and diagrams.

4.2 Implementation

The proposed system can be build using NodeMCU and other sensor devices. It will use SDA and SCL as a communication protocol.

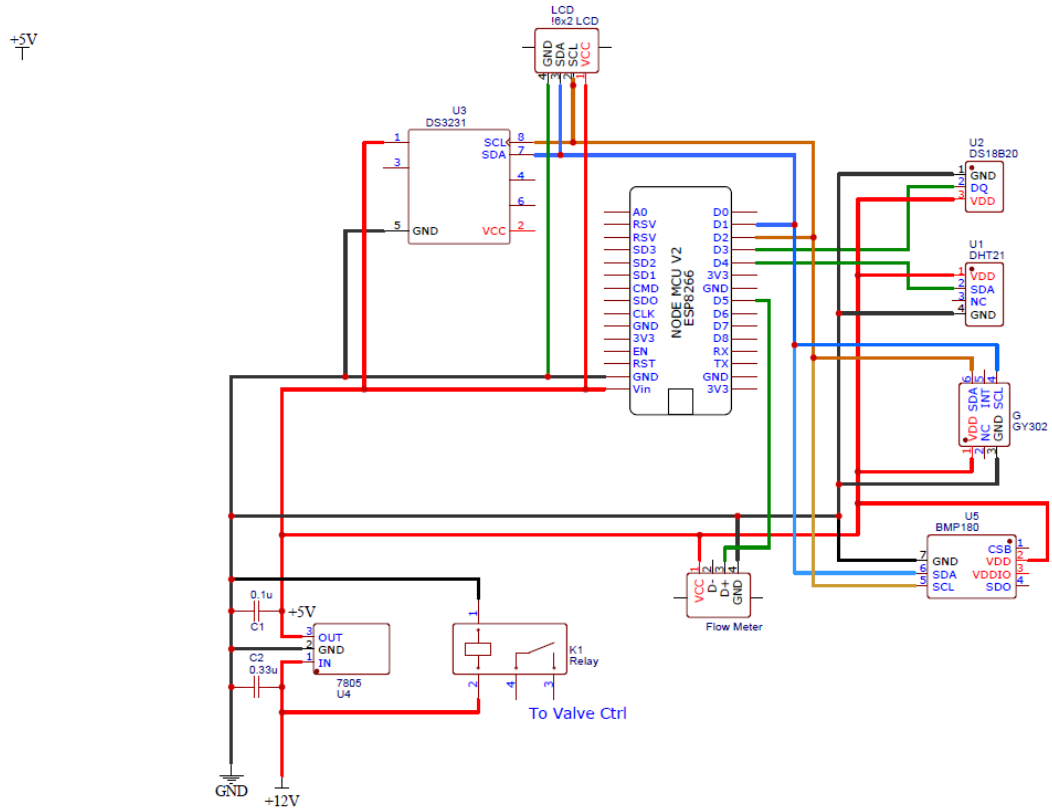

Figure 2: Schematic diagram of the proposed Smart farming system

4.3 Hardware Devices

NodeMCU V2 ESP8266

NodeMCU was initially created in 2013 by Espressif, a Chinese firm that develops the ESP8266 System on Chip (SoC). NodeMCU is a low-cost IoT platform that runs on the Lua programming language and is open source. NodeMCU is connected to digital temperature sensor, relative humidity sensor, UV index sensor, flow meter, real time clock module, an LCD display.Figure shows the NodeMCU V2 and its pin diagram [57].

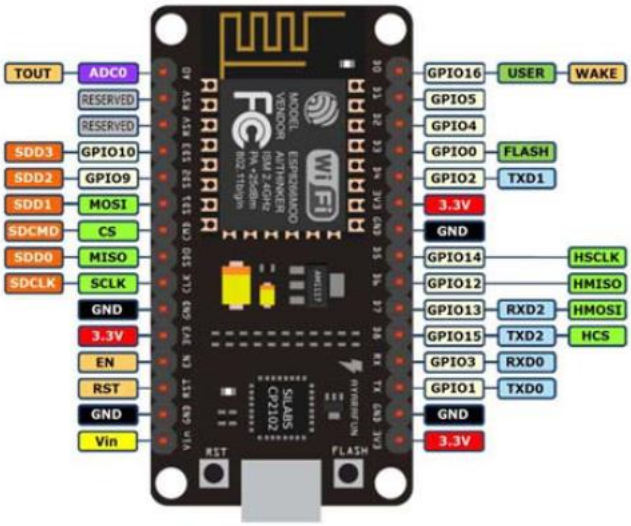

Figure 3: NodeMCU V2 and pin diagram

Sensor devices

Digital Temperature sensor

The DS18B20 is a temperature sensor that provides 9-bit to 12-bit temperature data. These numbers represent the temperature of a certain gadget.

Relative humidity sensor

The DHT21 is a high-performance humidity sensor that offers precise measurement, low power consumption, long-distance data transmission.

UV index sensor

GY302 is a UV index sensor that provides the precise amount of the receiving UV light.

Atmosphere pressure sensor

The BMP180 sensor is primarily used to determine ambient and biometric pressure. The air pressure sensor's functioning concept is quite basic; it is affected by the quantity of air. Because the air we breathe has a particular weight, and that weight has a certain pressure.

Flow Meter

This is used to measure the amount of water content that is used by the device, i.e., in a second how much litre water was used.

4.4 I2C Communication Protocol

The I2C protocol allows for simple communication with no data loss. It also provides good speed, compared to other protocols. I2C communication uses only two wires. It is lightweight, cost-effective, and all-encompassing. It also speeds up data transport. The protocol's goal is to provide high-speed communication and control registers inside devices, as well as data that can be kept on registers, allowing us to control a variety of parameters. Due to its precision and efficiency, I2C is used in data surveillance [58]. Two bidirectional open-drain lines, SDA and SCL, are used for communication. Serial Data (SDA) — This pin is used to send and receive data. The clock signal is carried via the serial clock (SCL). A high to low pulse of each clock on the SCL line synchronises each data bit sent on the SDA line.

5. EXPERIMENTAL ANALYSIS

After the configuration and testing of the obtained data, different factors influencing the performance can be understood. Some of the scenarios that may occur are the following.

(i) When using the atmospheric pressure sensor, the weather can be predicted up to an extent. When the pressure decreases suddenly, there is a possibility of a rain or storm. By using this weather prediction technique, the amount of water flow can be controlled.

(ii) When using the soil moisture sensor, if the moisture content decreases below the lower threshold, the valve should automatically open and simultaneously close when the moisture reaches it optimum value, and the flow meter should regulate the flow of water to the soil.

(iii) While using the humidity sensor, if the air moisture falls below the optimum value, a micro-controller will trigger the relay attached to the fogger, that can in turn sprinkle tiny water droplets that can remain suspended in the air which will help to maintain the relative humidity of the air.

(iv) Similarly, when the temperature rises above a certain level this mechanism will be triggered, small droplets in the size of a micron can be sprinkled and the water droplets will help to bring the temperature down.

This phase of the experimental analysis will most likely be carried out if the preceding approaches are completed within the estimated timeframe, resulting in finite experimental research in the report.

The proposed smart greenhouse will use cloud computing to accumulate the collected data. The collected data in the cloud would be encrypted, so that outsiders will not have any access to the data, and it can be stored for future use. Cloud computing encompasses both the applications that are supplied as services through the Internet and the technology and software that power the data centres that supply such services. Software as a Service (SaaS) is a term that has been used to describe the services for a long time [59]. Cloud users are vulnerable to security risks both within and outside the cloud. Many of the security concerns that come with defending clouds from outside attacks are like those that massive data centres currently face. However, in the cloud, this obligation is shared by several individuals, along with the cloud

user, the cloud vendor, and any third-party suppliers who provide security-sensitive software or configurations to users [59]. Application-level security is the responsibility of the cloud user. Physical security and, most likely, external firewall policies are the responsibility of the cloud provider. The user and the operator share security for intermediate levels of the software stack; the lower the degree of abstraction disclosed to the user, the more responsibility comes with it [59]. Even though cloud computing simplifies external-facing security, it introduces a new problem: internal-facing security. So, this proposed system needs to be encrypted because of the security concerns in cloud computing.

6. RESULTS

Consumer demand for high-quality, safe food that is also environmentally friendly, as well as market demands for low cost and pricing, can only be addressed in a knowledge-based economy. As a result, IoT is the enabling technology for gathering data-information from the field, and AI approaches are the means of converting that data-information into knowledge, which, when comparing to scientific background knowledge, leads to the optimal judgments to be made [60].

The proposed system can be performed on a real farm or small garden. By using the hardware devices and created the prototype, it’s working can be tested. The system can be implemented in an area that will aid in closely monitoring and controlling the micro-climatic different factors of a greenhouse system on a continuous basis around the clock for the farming of crops or any specific plant species, which will aid in maximising their production and reducing the system's difficulties to the greatest extent possible. The NodeMCU uses relay to complete the required work, allowing each sensor's value to return to its optimal level. The suggested system is low-cost and effective since NodeMCU is employed as the system's heart. Using cloud services, the system may deliver alarm messages on the greenhouse's state. Sensors, LCD display, a real-time clock module, flow metres, relays, and other components are included in the system. The sensors detect a change when any of the above-mentioned environmental factors crosses the threshold that must be maintained for the safety of the crops, and the relay opens or closes the valve based on the required action. All these data are collected and stored in a secure cloud platform. The cloud platform, i.e., GUI is encrypted so that no outsiders will get the data. The collected data can be used later to view as graphs and charts to see how much quantity is needed for each crop, it can be used as a data to maintain for the next time when growing that crop.

The advantage of using smart greenhouse over other conventional farming method is that we can produce insecticide and pesticide free crops and we will be able to create a climate for the proper growth of plants. Moreover, this system can be implemented by any individual in his house or may also be implemented a bigger farm. Since it is possible to maintain the climatic condition in this type of greenhouse, it is possible to cultivate any type of crop.

Thus, precision agriculture can aid in the achievement of the following goals:

-Improve supply chain management performance and costs

-Improve resource efficiency

-Improve food safety, sufficiency, and quality

-Human safety

-Adaptation and mitigation to climate change

-Improve the economics of production [60]

7. EVALUATION

With the increase in population, there is a growing demand for food, this in turn increases the demand for crop cultivation. Due to the use of bioenergy and biofuel production, there is food scarcity. As a consequence of these growing demands, the few agricultural resources are under pressure, because there are already only few areas possible for agricultural purposes. Even with the available land, due to growing urbanisation, there is a threat to the farmers. With conventional farming techniques, the farmers must go to the agricultural site to see the crop conditions. This gives a reason as of why smart agriculture must be used.

To meet the increasing food demand of the world's population in the face of dwindling arable land, an emphasis on smarter, better, and more efficient agricultural production practises is required. Weaned on technology, creative younger generations Agriculture as a career, agriculture as a way of independence from fossil fuels, crop monitoring, safety and nutrition labelling, and partnerships between producers, suppliers, retailers, and customers are all examples of innovative crop yield and handling methods that are currently being developed. This research considered all these aspects and emphasised the necessity of various technologies, notably the Internet of Things, in making agriculture smarter and more productive in order to meet future expectations. For this aim, sensors, cloud computing, and communication technologies are all explored in detail. In addition, there are a variety of IoT-based models and platforms for agricultural applications. As an outcome of all of this, maximising agricultural output requires every square foot of acreage. On the other hand, if every inch is to be dealt with effectively, the use of sustainable IoT-based sensors and communication technologies is not optional.

The basic concept is to improve the development of many types of high-quality crops in a controlled environment, such as a greenhouse. By adding sensor elements to NodeMCU, the suggested system may monitor changes in parameters like as temperature, humidity, and soil moisture and warn the user via a mobile application. Green Houses are climate-controlled rooms where plants are physically inspected, temperatures are adjusted on a regular basis, and the number of pesticides and fertilisers necessary for cultivation is kept to a minimum by careful monitoring and testing. This entire procedure is performed with the help of persons and machines working together. A person may make several mistakes, but a machine cannot. Similarly, green house automation would eliminate human mistakes that occur in traditional farming methods [61]. Controls were installed so that the environment could be interacted with

as necessary. As a result, green house monitoring and automation is a significant step toward making large-scale manufacturing less expensive.

REFERENCES

[1] "Growing at a slower pace, world population is expected to reach 9.7 billion in 2050 and could peak at nearly 11 billion around 2100," 17 July 2019. [Online]. Available: https://www.un.org/development/desa/en/news/population/world-population-prospects-2019.html.

[2] M. Roser, "Future Population Growth," OurWorldInData.org, 2013. [Online]. Available: https://ourworldindata.org/future-population-growth.

[3] "68% of the world population projected to live in urban areas by 2050, says UN," 17 May 2018. [Online]. Available: https://www.un.org/development/desa/en/news/population/2018-revision-of-world-urbanization-prospects.html.

[4] "Food Production Must Double by 2050 to Meet Demand From World's Growing Population," 9 October 2009. [Online]. Available: https://www.un.org/press/en/2009/gaef3242.doc.htm. [Accessed 22 March 2022].

[5] X. Z. a. E. A. Davidson, "Improving Nitrogen and Water Management in Crop Production on a National Scale," in *AGU Fall Meeting Abstracts*, 2018.

[6] "How to Feed the World in 2050 by FAO," 12 October 2009. [Online]. Available: https://www.fao.org/wsfs/forum2050/wsfs-forum/en/. [Accessed 22 March 2022].

[7] R. M. K. K. M. R. B. S. a. D. A. D. Tripathi, "Estimates for world population and global food availability for global," *The Role of Functional Food Security in Global Health.,* pp. 3-24, 2019.

[8] M. A.-U. Z. S. A. M. a. E.-H. M. A. Muhammad Ayaz, "Internet-of-Things (IoT)-Based Smart Agriculture: Toward Making the Fields Talk," in *Special Section on New Technologies for Smart Farming 4.0*, Saudi Arabia, IEEEAccess, 2019.

[9] S. N. a. M. N. G. Prasad, "Agricultural management through wireless sensors and Internet of Things," *Int. J. Elect. Comput. Eng.,* vol. 7, no. 6, pp. 3492-3499, 2017.

[10] J. S. J. A. M. V. M. A. F. S. Miguel A. Zamora-Izquierdo, "Smart farming IoT platform based on edge and cloud computing," *Intelligent Systems for Environmental Applications Research Papers,* pp. 4-17, 2018.

[11] L. G. C. V. a. M.-J. B. Sjaak Wolfert, "Big data in smart farming–a review.," *Agricultural Systems 153,* pp. 69-80, 2017.

[12] F. N. F. S. A. M. S. M. Amine Roukh, "WALLeSMART: Cloud Platform for Smart Farming," Vienna, Austria, 2020.

[13] P. S. V. V. A. K. Vasileios Moysiadis, "Smart Farming in Europe," *Computer Science Review 39,* 2021.

[14] A. I. H. S. B. P. A. A. K. M. A. K. Somnath D. Bhagwat, "Smart Green House using IOT and Cloud Computing," *International Research Journal of Engineering and Technology (IRJET),* vol. 5, no. 3, 2018.

[15] A. B. T. T. Sheetal Vatari, "Green house by using IoT and Cloud Computing," in *IEEE International Conference on Recent Trends in Electronics Information & Communication Technology*, 2016.

[16] V. J. a. S. K. Ravi Kishore Kodali, "IoT based Smart Greenhouse," in *IEEE Region 10 Humanitarian Technology Conference*, 2016.

[17] L. D. F. W. H. Y. Weimin Qiu, "Design of intelligent greenhouse environment monitoring system based on ZigBee and embedded technology," in *Consumer Electronics*, China, 2014.

[18] S. W. Vishwajeet Hari Bhide, "i-learning IoT: An intelligent self learning system for home automation using IoT," in *Communications and Signal Processing*, 2015.

[19] R. B. D. Pavithra, "IoT based monitoring and control system for home automation Communication Technologies," in *Global Conference on INSPEC Accession*, Thuckalay, 2015.

[20] N. C. A. P. Emerson Navarr, "A Systematic Review of IoT Solutions for Smart Farming," 2020.

[21] U. M. K. G. ,. T. P.Dedeepya, "Smart Greenhouse Farming based on IOT," *2nd International conference on Electronics, Communication and Aerospace Technology,* 2018.

[22] Z. J. F. F. Y. a. G. J. X. Zhao J. C., "The study and application of the IoT technology in agriculture," *3rd International Conference on Computer Science and Information Technology,* pp. 462-465, 2010.

[23] W. Z. Ning H., "Future Internet of things architecture: like mankind neural system or social organization framework?," *IEEE Communications Letters,* vol. 15, no. 4, pp. 461-463, 2011.

[24] Y.-e. D., "Design of intelligent agriculture management information system based on IoT," *Fourth International Conference on Intelligent Computation Technology and Automation,* pp. 1045-1049, 2011.

[25] Z. X. L. S. L. Z. Ma J., "Connecting agriculture to the Internet of Things through sensor networks," in *International Conference on Internet of Things and 4th International Conference on Cyber, Physical and Social Computing*, Dalian, 2011.

[26] Q. S. Hu X., "IoT application system with crop growth models in facility agriculture," in *6th International Conference on Computer Sciences and Convergence Information Technology*, Seogwipo, 2011.

[27] B. F., "Research on the agriculture intelligent system based on IoT," in *International Conference on Image Analysis and Signal Processing*, Hangzhou, 2012.

[28] D. M. D. M. M. X. H. R. W. H. Wang C., "Guest Editorial-Special Issue on Internet of Things (IoT): Architecture, Protocols and Services," in *IEEE Sensors Journal*, 2013.

[29] H. J. a. Y. H. Lee M., "Agricultural Production System based on IoT," in *IEEE 16th International Conference on Computational Science and Engineering*, Sydney, 2013.

[30] H. N. S. M. a. B. A. Tuli A., "Framework to leverage cloud for the modernization of the Indian agriculture system," in *IEEE International Conference on Electro/Information Technology*, Milwaukee, 2014.

[31] D. A. M. F. H. P. T.-M. J. Y.-O. A. C. T. S. Kiljander J., "Semantic interoperability architecture for pervasive computing and Internet of Things," in *IEEE Access*, 2014.

[32] S. M. a. E. S. A. Alam K. M., "Towards Social Internet of Vehicles: Concept, Architecture and Applications," in *IEEE Access*, 2015.

[33] P. D. Z. A. a. G. D. Jayaraman P. P., "Do-it-Yourself Digital Agriculture applications with semantically enhanced IoT platform," in *IEEE Tenth International Conference on Intelligent Sensors, Sensor Networks and Information Processing (ISSNIP)*, Singapore, 2015.

[34] a. K. J. Dlodlo N., "The internet of things in agriculture for sustainable rural development," in *International Conference on Emerging Trends in Networks and Computer Communications (ETNCC)*, Windhoek, 2015.

[35] I. Z. J. a. M. O. Ganchev, "A Generic IoT Architecture for Smart Cities," in *25th IET Irish Signals & Systems Conference 2014 and 2014 China-Ireland International Conference on Information and Communications Technologies*, Limerick, 2014.

[36] E. V. P. Anand Nayyar, "Smart Farming: IoT Based Smart Sensors Agriculture Stick for Live Temprature and Moisture Monitoring using Arduino," in *The International Conference on Communication and Computing System*, 2016.

[37] W. C. F. T. C.-L. L. Jiangfeng Cheng, "Industrial IoT in 5G environment towards smart manufacturing," in *Journal of Industrial Information Integration*, 2018.

[38] M. Bhagat, D. Kumar and D. Kumar, "Role of Internet of Things (IoT) in Smart Farming: A Brief Survey," in *In Proceedings of the IEEE 2019 Devices for Integrated Circuit*, Kalyani, 2019.

[39] M. Stoces, J. Vanek, J. Masner and J. Pavlík, "Internet of Things (IoT) in Agriculture—Selected Aspects," in *Agris on-line Pap. Econ. Informat*, 2016.

[40] "Statista Forecasted Market Value of Precision Farming Worldwide in 2018 and 2023," [Online]. Available: https://www.statista.com/statistics/721921/forecasted-market-value-of-precision-farming-worldwide/. [Accessed 27 March 2022].

[41] J. Kite-Powell, "Why Precision Agriculture Will Change How Food Is Produced.," [Online]. Available: https://www.forbes.com/sites/jenniferhicks/2018/04/30/why-precision-agriculture-will-change-howfood-. [Accessed 27 March 2022].

[42] S. Madakam, R. Ramaswamy and S. Tripathi, "Internet of Things (IoT): A Literature Review," *J. Computional Communication,* no. 3, pp. 164-173, 2014.

[43] J. Zhao, J. Zhang, Y. Feng and J. Guo, "The study and application of the IOT technology in agriculture.," *In Proceedings of the IEEE 2010 3rd International Conference on Computer Science and Information,* vol. 2, pp. 462-465, 2010.

[44] C. Verdouw, H. Sundmaeker, B. Tekinerdogan, D. Conzon and M. T, "Architecture framework of IoT-based food and farm systems: A multiple case study," *Computational Electronics Agriculture,* 2019.

[45] J. Chen and A. Yang, "Intelligent Agriculture and Its Key Technologies Based on Internet of Things Architecture," *IEEE Access,* 2019.

[46] "Telecommunication Standardization Sector of ITU. Recommendation ITU-T Y.2060: Overview of the Internet of Things," Geneva, Switzerland, 2012.

[47] M. Uddin, A. Mansour, D. Jeune, M. Ayaz and E.-H. Aggoune, "UAV-Assisted Dynamic Clustering of Wireless Sensor Networks for Crop Health Monitoring.," 2018.

[48] N. Liu, W. Cao, Y. Zhu, J. Zhang, F. Pang and J. Ni, "Node Deployment with k-Connectivity in Sensor Networks for Crop Information Full Coverage Monitoring," 2016.

[49] A. Thorat, S. Kumari and N. Valakunde, "An IoT based smart solution for leaf disease detection.," *In Proceedings of the IEEE 2017 International Conference on Big Data, IoT and Data Science (BID),* vol. 2018, pp. 193-198, 2017.

[50] Y. Rivas-Sánchez, M. Moreno-Pérez and J. Roldán-Cañas, "Environment Control with Low-Cost Microcontrollers and Microprocessors: Application for Green Walls," in *Sustainability 2019*, 2019.

[51] F. Karim, F. Karim and A. Frihida, "Monitoring system using web of things in precision agriculture," in *Procedia Computer Science*, 2017.

[52] S. Navulur, A. Sastry and M. Prasad, "Agricultural Management through Wireless Sensors and Internet of Things," in *International J. Electronics and Computer Science Engineering*, 2017.

[53] R. Alonso, I. Sittón-Candanedo, Ó. García, J. Prieto and S. Rodríguez-González, "An intelligent Edge-IoT platform for monitoring livestock and crops in a dairy farming scenario," in *Ad Hoc Network 2020*, 2020.

[54] "FIWARE The Open Source Platform for Our Smart Digital Future—FIWARE," [Online]. Available: https://www.fiware.org/. [Accessed 27 March 2022].

[55] P. Jayaraman, A. Yavari, D. Georgakopoulos, A. Morshed and A. Zaslavsky, "Internet of Things Platform for Smart Farming: Experiences and Lessons Learnt," 2016.

[56] A. Luis Bustamante, M. Patricio and J. Molina, "Thinger.io: An Open Source Platform for Deploying Data Fusion Applications in IoT Environments," 2019.

[57] M. A. S. Yasirli Amri, "Improving Smart Home Concept with the Internet of Things Concept Using RaspberryPi and NodeMCU," *IOP Conference Series: Materials Science and Engineering,* 2018.

[58] C. D. K. T. M. K. P. S. Jayant Mankar, "Review of I2C Protocol," *International Journal of Research in Advent Technology,* vol. 2, no. 1, 2014.

[59] A. F. R. G. A. D. J. R. K. A. K. G. L. D. P. A. R. I. S. M. Z. Michael Armbrust, "The ACM Digital Library," [Online]. Available: https://dl.acm.org/doi/fullHtml/10.1145/1721654.1721672#body-2. [Accessed 25 March 2022].

[60] L. S. L. L. L. M. L. M. K. G. A. C. G. N. S. Wu Yong, "Smart Sensors from ground to cloud and web intelligence," in *International Federation of Automatic Control*, 2018.

[61] K.Anujetal, "Prototype Greenhouse Environment Monitoring System," in *Proceedings of the International Multi Conference of Engineering and Computer Scientist*, 2010.