The Digitisation of Art and Craft: How does technology affect artists and the modern art sphere?

Independent Project: Extended Essay.

Name: Oliwia Kaczmarek

Student number: 2104640

Module Code: ADDA6006

Course: Design Crafts

Word Count: 4659

Lecturer: Julia Lockheart

This essay will seek to explore and delve deeper into the relationship between traditional craft and digital craft, aiming not only to define the relationship but also to analyse the dynamic between them through the exploration of the role that digitisation has held in the creative sphere. The objective is to uncover the multifaceted aspects of traditional craft and art, with the integration of digital craft methods that are slowly becoming an integral part of the craft process, and in some cases, becoming the industry standard.

This essay will investigate the relationship between traditional and digital craft, it will be argued that the advancement of digital technology requires an evolution of the creative practice. In which the dynamic between physical and augmented reality combine to produce a new wave of production. A selection of artists, namely Piper ZY, Andrea Salvatori, and Trejayne, will be analysed and discussed to further understand the significance of the digitisation of craft. It should be noted that the discussion of this essay is to identify the motivation and subsequent consequences of digitisation in a technologically advancing western society. The extent to which value and meaning is given to this medium. This will be explored in detail to inform the debate of how we can create art in a digital world.

The main focus of this essay will be directed towards the use of mixed reality mediums, namely augmented and virtual reality. With augmented reality's ability to put digital objects into real world spaces, and virtual reality's capacity to immerse users into a whole new digital world (Wigmore, 2016), these mediums represent innovation in the art sphere, both through how they're used by artists and makers but also how they're used by clients and consumers. The aims here are to study the

different ways in which makers utilise these digital technologies and look at the future potential that mediums such as augmented and virtual reality hold.

While discussing potential applications of digital technologies and how they fit into the art world, it is also important to look at the implications, both positive and negative, that the digital shift has had on artists and makers, and to question how it reshapes concepts, production of art and craft, and the consumption of it by the general public. The criticisms of digital techniques extend beyond the challenge to adapt to new technologies (Stevens, 2023), as many concerns focus on artists authenticity, and whether these technologies can one day replace human craftsmanship. Taking all of this into consideration, this essay will provide insight into the evolving nature of these digital practices and the role they have had in shaping contemporary art and craft.

Craft has been an integral part of self expression for humans and the creation of our cultures for millenia (Morriss-Kay, 2009). From ancient cave paintings, to intricate Victorian lace, humans have been making art as a way of preserving culture, showing off social status, or simply for their own enjoyment (Kobra, 2022). However, during the 21st Century, the art and craft world has experienced a significant transformation in the way that art and craft is not only made, but also shared and viewed by consumers. This is all due to the rising digitisation of art and its methods (Obare, 2023).

Firstly, it is important to define what is meant by “digitisation”. Burkett defined “digitisation” as the process of turning information from a physical format to a digital

one (Burkett, 2017). This definition can be extended to not just include information, but also the conversion of hand techniques to digital ones. For example, the technique of throwing clay by hand to make mugs, being converted into the ability to use 3D printers to print clay mugs. These definitions can also apply to the wider society, and in the way that slowly things have been replaced by digital processes and digital mediums. Therefore, for the purpose of this essay, the word “digitisation” will be used to reference any piece of technology that otherwise replaced a physical technique or physical art.

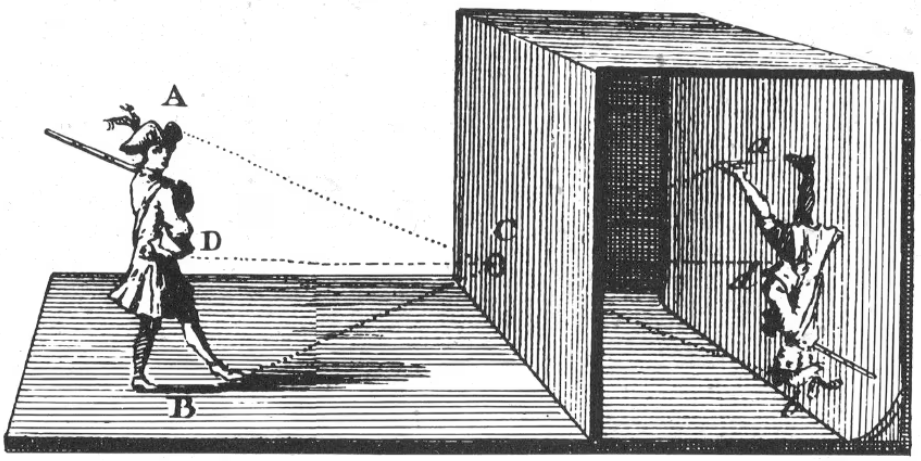

Fig. 1: Camera Obscura diagram

When looking at digital art and how digitisation has impacted the art world today, it is vital to acknowledge the earlier uses of old technology, and their contribution to the start of the digital era of art. Some of the earliest technologies that have been used by artists are the camera obscura, camera lucida and the phenakistoscope (McDonald, 2022). The camera obscura, which dates back as far as the 4th Century BC (*Introduction to the Camera Obscura,* 2020), in its simplest form, is a dark box with a small pinhole. When light enters the contaminants through the hole, an upside down image of the objects is projected (*What is a camera obscura?* 2020). Artists

have used cameras like this to try and capture interesting scenes or objects to later use as a reference in their work, much the same as some artists use modern cameras today.

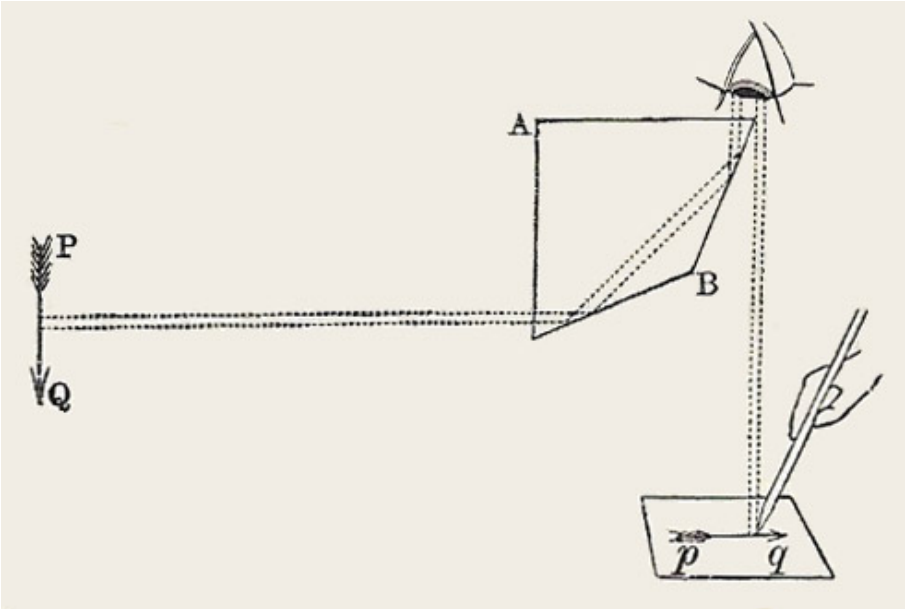

Fig. 2: Camera Lucida diagram

The camera lucida is one of the first pieces of technology that allows the artist to trace what they see in front of them. Invented by Sir Williams Hyde Wollaston in 1807, the device is essentially a prism on a stand (Boddy-Evans, 2019). All the artist had to do in order to see their reference on the page they were drawing on is look through the prism. This concept has been adapted into modern digital softwares used by artists today. For example, the use of layers in softwares such as Procreate and the ability to change the opacity of a reference, lets the artist trace directly from the image.

Finally, the phenakistoscope, a predecessor to animation. It is an optical illusion toy, in which a series of drawings is rotated, thus creating the illusion of movement (*A*

short history of the phenakistoscope, 2014). This method is the main way that we still animate today, just slightly edited, using frame by frame animation. The only difference is that frame by frame animation is on a rotation, but rather the frames flip rapidly to make it look like the image is moving (Andrianko, 2022).

It is important, when looking at the history of digitisation and the effect that it has had on our society, specifically looking through the lens of a western society, that there is a focus on the negative and positive applications of some of the newest technologies, like Artificial Intelligence (AI), augmented reality (AR), and virtual reality (VR). The recent emergence of these technologies has caused a shift in how we create art, shop for it and consume it. This digital revolution in the art sphere is an ongoing one, with experts and artists around the world continuously inventing and creating new digital features and more efficient and effective ways of doing things (*The History of Digitization,* 2023). When analysing these digital techniques and methods, it is key to take into consideration the positive and negative effects of these mediums, both on an individual and micro scale, and on the general and macro scale. This can be done by looking at how these digital techniques have already been exploited and how they have affected and divided the art community.

One of the main and still ongoing discussions surrounding the use of digital methods and machines in making art and craft is the debate on what can and should still be classed as “handmade craft”, and in turn, if the artist can truly claim whether they made the piece of art or whether it was made by a machine. The process of crafting and making, can be defined as using one's skill to create an object, typically by hand (Corbett, 2019). Corbett’s reference to the hands in these types of definitions implies

that a hand process needs to be involved in the making process of said object, otherwise, the maker can't claim that it was truly handmade.

This topic has been further covered by Mongeon, in the book "3D Technology in Fine Art and Craft". In this book, the author argues that the use of, and therefore, the inevitable relying on technology and digital processes impairs the skill level of the maker as they don't have to rely on their hands to create art anymore (Mongeon, 2017). This supports the theory and definition of "craft" by Corbett, suggesting that it is crucial for the maker to involve their hands in the making process, rather than replacing them with technology and machines.

However, it can be argued that the use of digital tools is the same as using traditional tools. In both cases the artist is still the one in control of the tool, having spent hours practising and learning how to use the tool correctly in order to achieve the desired end product (Burke, 2023). Were it not for the artist, the piece of technology, such as a machine or software, wouldn't know what to do. It has to be told by the maker. Which means that art that is created by digital means is determined by the creativity and conscious instruction of the human.

Figure 3: Andrea Salvatori - Ikebana Rock'n'Roll

Exploring a different narrative discourse, Andrea Salvatori challenges and directly opposes the arguments made by Mongeon is Adrea Salvatori. In his collection titled "Ikebana Rock'n'Roll", Salvatori showcases his 3D printed ceramic vessels. However, during the 3D print, he disturbed the process by inserting ceramic spheres into the vessel. This interference with the 3D printing process redefines the relationship between the maker and the machine, exhibiting that both can coexist synergistically (Vialva 2019).

The use of CAM (Computer Aided Manufacture) and CAD (Computer Aided Design) softwares, like Fusion360 or Blender, along with 3D printing machines have been one of the most prominent pieces of technology to seep its way into the art world (Zenkevicius, 2019). With the use of these technologies, artists and makers can now

create intricate models of their work digitally, with a high level of precision and detail. This had proven to be such a successful tool for artists and designers that using 3D sculpting and design softwares had become the standard in many industries, including jewellery making and design (Mehta, 2018). As well as this, many companies now also find it desirable, if not necessary, for their designers to be able to use 3D sculpting softwares.

3D modelling has also proved to be a great tool for experimentation with different materials, textures, and colours. Rather than wasting real materials, artists and makers can use a 3D sculpting software to digitally sculpt their designs and objects, being able to apply various finishes and effects to test what that might look like on the real object. This method is not only cheaper, but it also speeds up the process of experimentation, meaning that the designer/maker can more efficiently and effectively relay their clear ideas to their clients.

Fig. 4: Trejayne - Blood Seal Necklace FMA

After the artist has digitally sculpted their piece, they can also use 3D printing technology to print out their design in either filament or resin. This is useful for artists to visualise their final product and what it will look like, feel like, and how it takes up the physical space, all while using cheap materials to do so. These 3D printed objects can then be used to make moulds. A Scottish glass artist by the name of Trejayne uses 3D sculpting and 3D printing to make moulds for her freeze and fused glass jewellery (Trejayne, 2023). Using 3D printed objects to make moulds ensures accuracy and detail in the final piece (as shown in figure_). Especially when working with unpredictable materials, like glass, artists can easily make new moulds and reprint their 3D objects in case anything goes wrong, as they will always have the file.

The use of 3D design using CAD/CAM has been further talked about by Chiara Scarpitti in her book “Singular Multiples: Contemporary Jewellery Beyond the Digital”. In this book, she goes on to say that the use of such technologies, along with handmade processes like lost wax casting, the overall process of making a piece of jewellery becomes more efficient (Scarpitti, 2019). Especially when combined with 3D wax printing, the artist can directly print off their design in wax to be sent off for lost wax casting, eliminating hours of hand sculpting the wax (Mickelsen, 2021). 3D printing in wax can also allow for more intricate and delicate designs that otherwise would be extremely difficult to replicate by hand.

Alongside 3D modelling and printing, one of the other most notable technologies that have seeped into the world of art is drawing and painting softwares, such as Procreate (Brackey, 2021). These kinds of software have become increasingly

popular among younger artists and those who have just started to create. Procreate, and softwares similar to it, are very user friendly and easy to navigate, often coming with a large selection of brushes and effects, allowing the artist to replicate the look of real brush strokes. All of this for a fraction of the price it would cost to buy a canvas, paints, brushes and other physical tools. Additionally, apps such as Procreate can be used to mock up sketches and moodboards for clients in an efficient way while still looking highly professional. The existence of apps and tools such as this make art more accessible to those who can't afford traditional tools and equipment. As well as this, the development of new tools leads to new ideas and innovation, something that has been revered by those in support of using technology to aid the craft process (Davies, 2017).

The digital revolution hasn't all been positive, though. Many challenges and concerns arose within the art community. Especially with the increasing popularity of AI, concerns around privacy, plagiarism and bias came to light (Sharma, 2023). This bias had been found in AIs such as Amazon's automated recruitment system, where it could be seen how through the use of algorithmic learning, the AI has adopted human-like biases and prejudices (Chen, 2023). In this case, due to the lack of representation of women in STEM roles, the AI thought that male applicants were preferable, therefore penalising applications from women. This led to Amazon having to stop using this type of recruitment system as it showed a clear bias against women (Denison, n.d.). This type of bias can be easily applied to the way AI is used for art, namely perpetuating prejudices and stereotypes of groups of people and how they have been viewed through art in history. This is particularly problematic when the AI is learning about art and craft from a western point of view (Tiku et al., n.d.).

Artificial intelligence (AI) is one of the digital processes that has had a lot of backlash in the art community. With its quick and easy effort to generate artworks on a whim, many artists have been reluctant to use AI as part of their design and making process (Shaffi, 2023). However, AI does have positive uses, when used mindfully. One of the many uses of AI for artists is that it can offer creative suggestions and expand on current sketches and ideas that the artist has (Hencz, 2023). This is a particularly good tool to use when struck with a creative block, as the AI suggestions can spark new ideas that can be better interpreted through human eyes.

Alongside AI, this essay will also cover the use of augmented reality within art and craft spaces. Helen Papagiannis defined AR as virtual aspects, such as texts, illustration or animations, interacting with real surroundings and in real time, while being registered and experienced in 3D (Papagiannis, 2017). Augmented reality has been effectively used in many different ways, however, it is still a relatively new tool, with very few utilising this tool in both the making process nor the final piece.

However, in order to fully understand augmented reality, it is important to first understand the concept of “mixed reality”. This term refers to an experience that has both aspects of the physical and digital worlds interacting with each other (*What is mixed reality?* 2023). Both augmented reality and virtual reality are classed as “mixed reality”. Using Isaac Asimov’s “Law of Robotics" as inspiration, John Rousseau came up with 3 key “laws of mixed reality”, as a way to ensure that augmented reality and virtual reality impact society in a positive way. These laws

cover the 3 main problems that Rousseau had with the possible applications of mixed reality.

The first law that Rousseau outlined involved the individual and how technology "leads to increasingly short attention spans, and lessens human productivity and potential" (Rousseau, 2016). This law pointed out that mixed reality should enhance our attention spans, not hinder them. However, it can already be argued that, as a society, we have failed the first law, with statistics showing that over the last 2 decades, our attention span decreased from 12 to 8 seconds (Wolmark, 2023).

The second law of mixed reality is in direct reference to society and how mixed reality must have an element of a "shared human experience" (Peddie, 2017). Rousseau wanted to make sure that mixed reality would still have an aspect of human empathy to it, rather than becoming a way for people to isolate themselves from each other. Therefore, mixed reality should be designed with human connection and sharing experiences in mind.

Finally, the last law that Rousseau proposed was in reference to economics. More specifically, the creation and uphold of boundaries between user data and commerce (Rousseau, 2016). The topic of user privacy and data protection has been a concern at the forefront of the digital revolution. From social media companies selling user data to third party companies, to fears surrounding augmented reality filters scanning the face and storing physical data (Reid, 2020). Rousseau even argued that each day, user data becomes more and more valuable, and in turn, can be easily manipulated (Peddie, 2017).

This has become increasingly true over the last few years with the rise of digital phenomena like “deepfakes”, which ae AI generated video or audio portraying a person’s exact looks or voice (Sample, 2020). These videos have huge negative implications. It has become so easy for anyone to manipulate a person’s voice (their data) to make it look like they said something controversial, potentially costing that person their job and social standing. And with the advancements in AI and mixed reality, it is becoming increasingly difficult to tell the difference between the real person and the AI generated version.

In essence, the “laws of mixed reality” created by Rousseau act as an ethical foundation for the relatively new field of not only augmented and virtual reality, but digital mediums as a whole. By aligning these laws with Asimov’s laws of robotics, Rousseau’s laws help us to put up boundaries in the exploration of mixed reality technologies, and recognise any dangers that they might pose to our society, no matter how trivial these dangers may seem at first. These laws can also be used as a basis to addressing concerns surrounding ethics, digital safety, accessibility, and accountability.

Through augmented reality, not only can consumers personalise their experience of said craft or art piece, but also be able to experience it wherever they are. Whether that’s through applying a filter to customise the look of an object, virtual jewellery and clothing try-ons, or overlaying personal graphics and text onto an art piece, augmented reality has made it possible for each experience of art (even the same piece) to be a completely new and unique experience each time (Bonasio, 2018).

This allows the consumer to feel a deeper and more personal connection to the piece of artwork, finding their own meaning and even applying new ones.

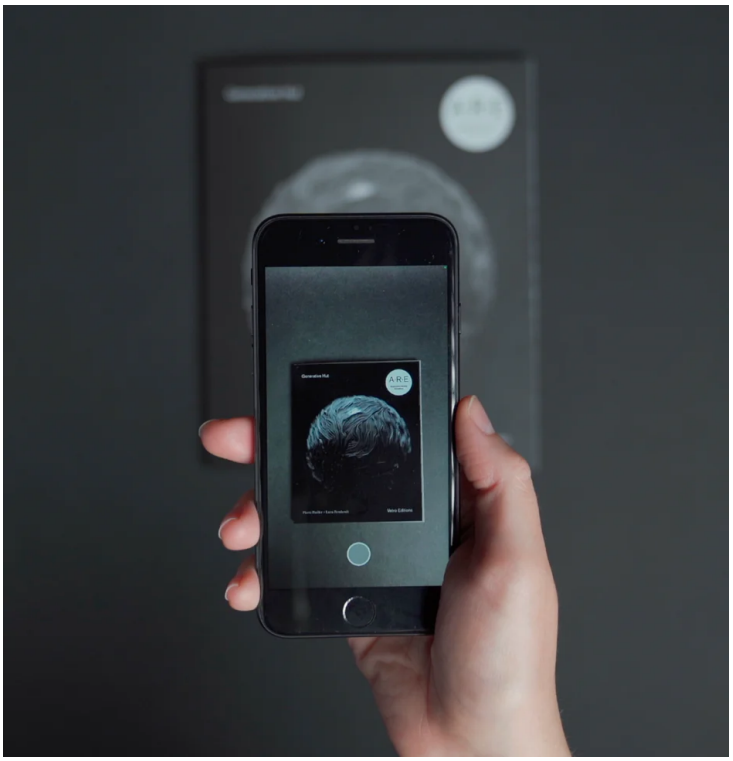

Fig. 5: Augmented Reality Exhibition

One example of the way in which augmented reality can be uniquely experienced is the A.R.E (Augmented Reality Exhibition) by GenerativeHut. This exhibition, which comes in the form of a book, consists of thirty one international artists that all work with augmented reality in their craft. In the exhibition, viewers can scan optical illusion pieces with their phones, making the piece come to life with an animation that would otherwise be hidden if viewed solely through the eyes (*A.R.E generative hut* 2023).

The A.R.E is a great example of the fusion between traditional art, in this case drawings and illustrations, and modern techniques, being the use of AR filters. It

shows that there can be a balance between relying on technology and on the hands of the maker, by adding the digital and virtual aspects as not only part of the making process of the illustration pieces, but also as part of the viewing experience of the consumer.

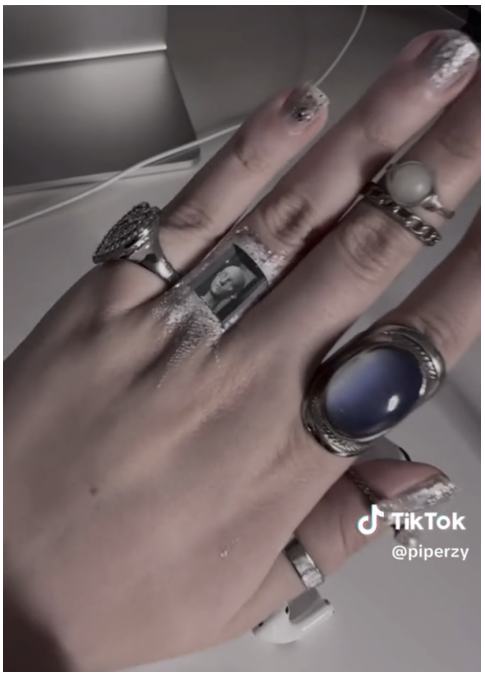

Fig. 6: Piper ZY - engagement ring

On the other hand, Piper Zy, a leading artist in the digital art sphere who specialises in augmented reality art, has made it a point to have her work be purely digital, with no tactile aspect. Her futuristic designs are made to trick the eye, while making the viewer think about what the future of jewellery and fashion could look like. One of Piper Zy's most notable works is her interpretation of the future engagement ring [as seen in figure_], in which the wearer had their loved ones face embedded into the skin of their ring finger using augmented reality. While this isn't something that could ever be seen with our own eyes, the emerging popularity of AR and VR glasses, something like virtual jewellery and accessories could very well be something in our near future (Trumper, 2023).

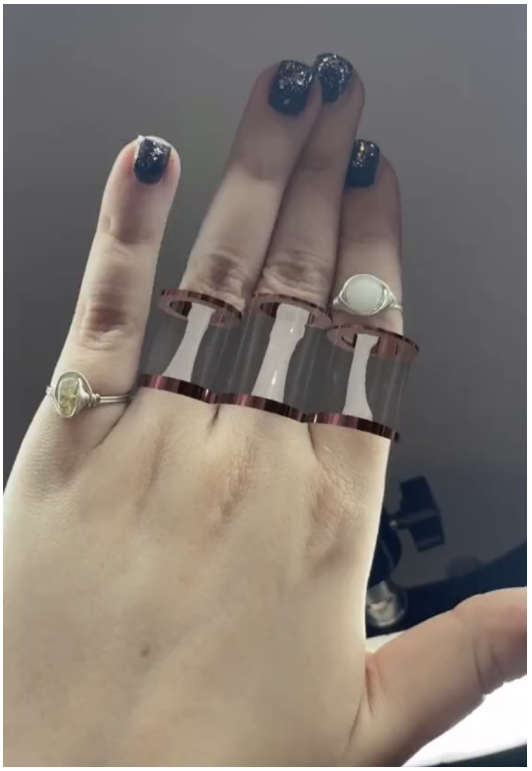

Fig. 7: Piper ZY - bone ring

Piper Zy's method of making these virtual accessories is one she pioneered and perfected. Using Blender, a 3D animation and sculpting program, she creates the piece of jewellery, then tracking it onto the body using virtual filters. Any see-through elements of her work are green-screened and edited in after effects, where she manually colour matches the space to the background of her videos and pictures frame by frame (Piper ZY, 2023). This gives the illusion that the piece of jewellery is actually embedded inside of the body.

Both augmented and virtual reality have pushed the boundaries of art, blurring the lines between what is real and what isn't. While augmented reality brings the virtual to the physical, virtual reality does the opposite, allowing the physical person to fully immerse themselves into a fully digital environment that they can navigate through

(Aukstakalnis, 2015). This new way of making art can be a very useful tool for any artist. For example, VR technologies can be used to sketch objects in the physical space that we are standing in, helping the artist to visualise the final object in terms of size, material, and overall aesthetic. This method saves both time and physical resources for the artist, as they don’t have to spend hours of their time to make physical mock ups of their works, while still allowing them to visualise the final results in the space that their work would occupy.

However, the digital transformation and evolution within art spaces has benefits extending not only to artists, but also reaching consumers. One of the most noteworthy benefits relates to how art can now be viewed and enjoyed. The rise of social media and digital ways of viewing art means that art is no longer confined to the walls of museums and galleries, now being available for anyone with access to the internet to enjoy (Dunn, 2020). This has not only given more access to art to the general public, but also helped to diversify the audience, and encourage those who normally wouldn't to engage with art.

Furthermore, the digitisation of art has allowed for the art community to have a more global outreach and help to break down social barriers around what is considered to be art and who can enjoy it (Bolter, 2019). This has hugely helped to grow the audience and reach of individual artists and makers. Now artists don’t have to rely on galleries to get their works out there, but rather can reach millions of people by putting their work online (Peter, 2023).

Historically, the narrative surrounding what is considered to be art and who can enjoy it has been controlled by the elite (Ostrower, 2004, p.14). These elites held significant influence in shaping the perceptions of what art is, and these perceptions are still being upheld today in certain art spaces (Thorpe, 2014). These perceptions have also contributed to which artists were most commonly promoted, and determining the value of specific forms of art, classing some as better and some as worse.

However, Bolter argues that with the rising use of traditional media and social media, people have had more access to art, therefore, taking away the control of art from the elite (Bolter, 2019). With the use of social media platforms, such as TikTok, Twitter and Instagram, the general public now have an easier way to find and explore art, while being able to directly interact and connect with the artist, giving critique and opinions. There are drawbacks, however. Many artists don't get pushed out by the algorithm, and when they do, they get countless criticisms, resulting in lower self-esteem and in turn, a negative impact on their mental health (Fox, 2023).

Either way, social media has become a crucial aspect of success for modern artists. Not only does it provide an easier way of gaining a global audience, but also gives artists close-knit communities with each other and their consumers. This way artists can share their opinions, interpretations and resources with each other, making the art space feel more welcoming to those who wish to join it (Sherwin, 2011). With this, the hold and control that the elite held over the art community is now easing to exist, and artists themselves now have the ability to question what was considered the norm and decide for themselves what art is and who can participate in it.

To conclude, it is clear that the digitisation of traditional and physical art and its methods, and its ongoing evolution, is an inevitable and unavoidable part of the modern art world (Jin & Liu, 2022). As a community, not only is it our duty to use these tools to its fullest extent but also to mitigate any drawbacks and negative effects that these technologies might have on individuals or the society as a whole. A balance between digital processes and traditional hand techniques needs to be found, and that balance might look different to every artist who chooses to combine both worlds into their own practice. In essence, the fusion between the digital and the traditional offers artists a wholly unique toolkit they have never had access to before. As these digital tools continue to evolve and get better, so will the creativity of those who choose to use it, artists will be able to redefine and restructure art spaces, making them more inclusive, giving a truly connected and shared experience.

The lines between digital methods and technologies being dangerous or a hindrance to artists are still somewhat blurred, as the art community is still trying to figure out the right balance and boundaries between traditional and digital art and craft. Meaning that there needs to be strict safeguarding surrounding the use of these new technologies, especially when it comes to user safety and situations of plagiarism (Jane, 2023).

The conversation surrounding the integration of digital tools and technologies into the art sphere is an ongoing and evolving one. Both artists and consumers are actively working together to shape a foundation and framework that focuses on art and innovation first, while upholding ethical concerns and addressing those as a

community. This collaboration between the maker and the consumer will help to establish a coexistence between traditional and digital art methods and forms.

References:

Andrianko, I. (2022) *Frame by frame animation techniques in the 21st Century*, *rocketwheel brand text*. Available at: https://www.rocketwheel.com/post/frame-by-frame-animation-techniques (Accessed: 12 December 2023).

A.R.E generative hut (2023) *POCKO*. Available at: https://www.pocko.com/content/a-r-e-generative-hut/ (Accessed: 12 December 2023).

A short history of the phenakistoscope (2014) *Juxtapoz Magazine*. Available at: https://www.juxtapoz.com/news/illustration/short-history-of-the-phenakistoscope/ (Accessed: 13 December 2023).

Aukstakalnis, S. (2015) *Practical augmented reality*. Addison-Wesley.

Bolter, J.D. (2019) *How the elite lost control of art*, *Salon*. Available at: https://www.salon.com/2019/04/28/how-the-elite-lost-control-of-art/ (Accessed: 13 December 2023).

Bonasio, A. (2018) *Augmented reality will reinvent how we experience art*, *Forbes*. Available at: https://www.forbes.com/sites/alicebonasio/2018/06/20/augmented-reality-will-reinvent-how-we-experience-art/ (Accessed: 12 December 2023).

Brackey, M. (2021) *The rise of procreate in the Digital Art World*, *Iowa State Daily*. Available at: https://iowastatedaily.com/251461/news/the-rise-of-procreate-in-the-digital-art-world/ (Accessed: 12 December 2023).

Burke, W. (2023) *How long does it take to learn Blender?*, *CG Cookie*. Available at: https://cgcookie.com/posts/how-long-does-it-take-to-learn-blender (Accessed: 12 December 2023).

Burkett, D. (2017) *Digitisation and Digitalisation: What means what?*, *Gov & Ent: Proven Legacy Software Modernisation*. Available at: https://workingmouse.com.au/innovation/digitisation-digitalisation-digital-transformation/ (Accessed: 12 December 2023).

Chen, Z. (2023) 'Ethics and discrimination in artificial intelligence-enabled recruitment practices', *Humanities and Social Sciences Communications*, 10(1). doi:10.1057/s41599-023-02079-x.

Corbett, S. (2019) *How to be a Craftivist: The art of gentle protest*. London: Unbound.

Davies, S. (2017) *How art-based apps are bringing people back to museums*, *Tech.co*. Available at: https://tech.co/news/apps-bring-art-people-2017-08 (Accessed: 12 December 2023).

Denison, G. (no date) *4 shocking AI bias examples*, *Prolific · Quickly find research participants you can trust.* Available at: https://www.prolific.com/blog/shocking-ai-bias (Accessed: 12 December 2023).

Dunn, C. (2020) *The recent rise of the Virtual Museum experience*, *Institute of Art and Law*. Available at: https://ial.uk.com/virtual-museum-experience/ (Accessed: 13 December 2023).

Fox, V. (2023) *How social media is impacting artists*, *Beautiful Bizarre Magazine*. Available at: https://beautifulbizarre.net/2023/03/03/social-media-impacting-artists/ (Accessed: 13 December 2023).

Hencz, A. (2023) *Ai Art and how machines have expanded human creativity*, *Artland Magazine*. Available at: https://magazine.artland.com/ai-art/ (Accessed: 12 December 2023).

Introduction to the Camera Obscura (2020) *National Science and Media Museum blog*. Available at: https://blog.scienceandmediamuseum.org.uk/introduction-camera-obscura/ (Accessed: 13 December 2023).

Jane, E. (2023) *Cybersecurity's global impact: Safeguarding our connected world in the Digital age.*, *Medium*. Available at: https://medium.com/@emmaja/cybersecuritys-global-impact-safeguarding-our-connected-world-in-the-digital-age-b25ba67d422c (Accessed: 13 December 2023).

Jin, P. and Liu, Y. (2022) 'Fluid space: Digitisation of cultural heritage and its media dissemination', *SSRN Electronic Journal* [Preprint]. doi:10.2139/ssrn.4198122.

Kobra, E. (2022) *Why is art important to society*, *EDEN Gallery*. Available at: https://www.eden-gallery.com/news/why-is-art-important (Accessed: 12 December 2023).

Mehta, P. (2018) *Evolution of 3D printed jewellery*, *AM Chronicle*. Available at: https://amchronicle.com/insights/evolution-of-3d-printed-jewellery/ (Accessed: 12 December 2023).

McDonald, S. (2022) *The history and future of Digital Art*, *Linearity blog*. Available at: https://www.linearity.io/blog/digital-art/ (Accessed: 12 December 2023).

Mickelsen, A. (2021) *What is 3D printed and lost wax cast jewelry?*, *Amelia Ray Jewelry*. Available at: https://ameliarayjewelry.com/blogs/news/what-is-3d-printed-and-lost-wax-cast-jewelry (Accessed: 12 December 2023).

Mongeon, B. (2017) *3D technology in Fine Art and craft: Exploring 3D printing, scanning, sculpting, and milling*. Routledge.

Morriss-Kay, G.M. (2009) ‘The evolution of human artistic creativity’, *Journal of Anatomy*, 215(3). doi:10.1111/j.1469-7580.2009.01139.x.

Obare, E. (2023) *The purpose of Digital Art in contemporary culture*, *Arts Help*. Available at: https://www.artshelp.com/digital-art-in-contemporary-culture-nfts/ (Accessed: 12 December 2023).

Ostrower, F. (2004) *Trustees of culture: Power, wealth, and status on Elite Arts Boards*. Chicago, IL: University of Chicago Press.

Papagiannis, H. (2017) *Augmented human: How technology is shaping the new reality*. Bejing: O'Reilly.

Peddie, J. (2017) *Augmented reality: Where we will all live*. S.l.: SPRINGER INTERNATIONAL PU.

Peter, J. (2023) *The benefits of online art communities*, *OurSimpleArts*. Available at: https://oursimplearts.com/the-benefits-of-online-art-communities/ (Accessed: 13 December 2023).

Piper ZY. (2023). *What Is Augmented Reality? How I Make My Viral Art.* [Online video] Available at: https://www.youtube.com/watch?v=MDpgV1GFa3Q. (Accessed: 13 December 2023).

Reid, A. (2020) *Are filters on social media being used to collect your identity?: 8MS blog*, *8 Million Stories (8MS)*. Available at: https://8ms.com/blog/are-filters-on-social-media-being-used-to-collect-your-identity/ (Accessed: 12 December 2023).

Rousseau, J. (2016) *The laws of mixed reality: A vision of the future, without the Rose-colored glasses*, *GeekWire*. Available at: https://www.geekwire.com/2016/guest-post-laws-mixed-reality-mixed-reality-without-rose-colored-glasses/ (Accessed: 12 December 2023).

Sample, I. (2020) *What are deepfakes – and how can you spot them?*, *The Guardian*. Available at: https://www.theguardian.com/technology/2020/jan/13/what-are-deepfakes-and-how-can-you-spot-them (Accessed: 13 December 2023).

Scarpitti, C. (2019) *Singular multiples: Contemporary jewellery beyond the Digital*. LIST Lab.

Shaffi, S. (2023) *'it's the opposite of art': Why illustrators are furious about ai*, *The Guardian*. Available at:

https://www.theguardian.com/artanddesign/2023/jan/23/its-the-opposite-of-art-why-illustrators-are-furious-about-ai (Accessed: 12 December 2023).

Sharma, G. (2023) *Generative AI users have data privacy and bias concerns: Applause*, *IT Brief UK*. Available at: https://itbrief.co.uk/story/generative-ai-users-have-data-privacy-and-bias-concerns-applause (Accessed: 13 December 2023).

Sherwin, B. (2011) *Online art community: The pros and cons of online art groups*, *fineartviews.com*. Available at: https://fineartviews.com/blog/35111/online-art-community-the-pros-and-cons-of-online-art-groups (Accessed: 13 December 2023).

Stevens, A. (2023) *The evolution of art critique in the age of Social Media*, *Art Business News*. Available at: https://artbusinessnews.com/2023/08/the-evolution-of-art-critique-in-the-age-of-social-media/ (Accessed: 12 December 2023).

Tiku, N., Schaul, K. and Chen, S.Y. (no date) *Ai generated images are biased, showing the world through stereotypes ...*, *Washington Post*. Available at: https://www.washingtonpost.com/technology/interactive/2023/ai-generated-images-bias-racism-sexism-stereotypes/ (Accessed: 12 December 2023).

The History of Digitization (2023) *Base22*. Available at: https://base22.com/blog/the-history-of-digitization/ (Accessed: 13 December 2023).

Thorpe, M. (2014) *Is art still elitist?*, *Raconteur*. Available at: https://www.raconteur.net/culture/is-art-still-elitist (Accessed: 13 December 2023).

Trejayne. (2023). 20/03. https://vm.tiktok.com/ZGeLDxJpM/ (Accessed: 13 December 2023).

Trumper, L. (2023) *The rise of Wearable Tech: Will AR smart glasses replace mobile phones?*, *BIMA*. Available at: https://bima.co.uk/the-rise-of-wearable-tech-will-ar-smart-glasses-replace-mobile-phones/ (Accessed: 12 December 2023).

Vialva, T. (2019) *Andrea Salvatori and Wasp create 3D printed Ikebana vases*, *3D Printing Industry*. Available at: https://3dprintingindustry.com/news/andrea-salvatori-and-wasp-create-3d-printed-ikebana-vases-152618/ (Accessed: December 14, 2022).

What is a camera obscura? (2020) *Camera Obscura and World of Illusions Edinburgh*. Available at: https://www.camera-obscura.co.uk/article/what-is-a-camera-obscura (Accessed: 13 December 2023).

What is mixed reality? (2023) *Mixed Reality | Microsoft Learn*. Available at: https://learn.microsoft.com/en-us/windows/mixed-reality/discover/mixed-reality (Accessed: 12 December 2023).

Wigmore, I. (2016) *What is immersive virtual reality (immersive VR)?: Definition from TechTarget*, *techtarget*. Available at: https://www.techtarget.com/whatis/definition/immersive-virtual-reality-immersive-VR (Accessed: 12 December 2023).

Wolmark, M. (2023) *Average human attention span (statistics)*, *Golden Steps ABA*. Available at: https://www.goldenstepsaba.com/resources/average-attention-span (Accessed: 12 December 2023).

Zenkevicius, T. (2019) *Cultural complements: The Rise of Technology in art*, *FDM Group*. Available at:

https://www.fdmgroup.com/blog/cultural-complements-the-rise-of-technology-in-art/ (Accessed: December 14, 2022).

Figures:

Figure. 1: Camera Obscura diagram. Accessed: https://lensbaby.com/blogs/creative-photography/artists-using-obscura

Figure. 2: Camera Lucida diagram. Accessed: https://www.daviddarling.info/encyclopedia/C/camera_lucida_and_camera_obscura.html

Figure. 3: Andrea Salvatori: Ikebana Rock'n'Roll. Accessed: https://www.artsy.net/artwork/andrea-salvatori-composizione-40100-number-10-preludio-e-fuga

Figure. 4: Trejayne - Blood Seal Necklace FMA. Accessed: https://trejayne.com/tiktok-creations/blood-seal-necklace-fma

Figure. 5: Augmented Reality Exhibition. Accessed: https://www.pocko.com/content/a-r-e-generative-hut/

Figure. 6: Piper ZY - engagement ring. Accessed: https://vm.tiktok.com/ZGeLDoJmb/

Figure. 7: Piper ZY - bone ring. Accessed: https://vm.tiktok.com/ZGeLDCo2b/