Design & Development of a multi-effect effects board

Prifysgol Cymru
Y Drindod Dewi Sant
University of Wales
Trinity Saint David

By Aaron Bowditch / Supervisor: Stephen Mosey

University of Wales Trinity St David,
Mount Pleasant, Swansea, SA1 6ED,
BSc (Hons) - Electrical & Electronic Engineering

ABSTRACT

The overall aims of this project was to design and develop a multi effects board which had the ability to change and update the installed effect patches at the needs of the user. The secondary aim of the project was to use the development stages to gain an understanding of different ways to program EEPROMs as well as other coding languages which may have become relevant as the project advanced.

The main method used for this project was research, a lot of online research was done to gain an understanding of effects board's as well as an understanding of the processes and stages involved in designing and building a breadboard system with multiple components. Trial and error was also used for most of the development process one the board was built, programming became a major hurdle for this project and a lot was learnt from dealing with the struggles of being unable to program as originally planned.

The main findings of this project were that breadboards and all components installed on them can be extremely volatile and temperamental when producing a system which required a low stable voltage. Secondly it was found that there is almost an endless way to program different types of memory, specifically for this project a 24 series EEPROM was used, for this specific EEPROM 5 different processes were used to achieve the final upload of code.

in conclusion this project allowed for a greater understanding of the process of designing, part selecting, and manufacturing of an electronics system, it also gave the opportunity for an expanding of knowledge on coding and communication protocols. Overall this project was extremely difficult for someone relatively new to electronic circuits and coding, and is something which should be undertaken following the direct recommendations of the system supplier, in this case Spin, to use the correct development tools rather than trying to produce a purpose built system implementing their software and hardware. Images of the completed breadboard system can be seen in the appendices.

AIMS & OBJECTIVES

The aims and objectives of this project are to;

Design and produce a working effects board.

Have a suitable system which has the ability to work with varying input devices.

Develop a wider understanding of what effects are, and how they work.

Further my knowledge and understanding of communication protocols, such as I2C.

To satisfy the aims of the project there are three main objectives which were outlined to provide a clear goal for the end of the project to allow me to satisfy the aim and they are as follows;

Complete the design and manufacture of a working effects board

Complete the process of producing my own effects to be installed on the systems memory device.

Successfully produce an EEPROM communication protocol to allow the transfer of data between a computer and the EEPROM.

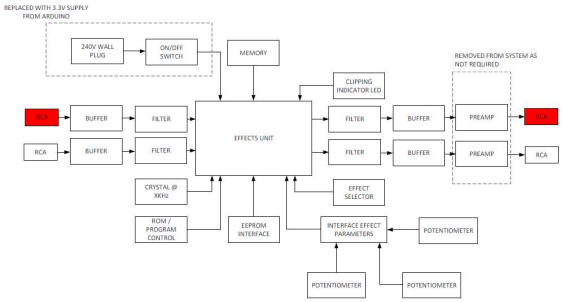

WHAT ARE EFFECTS RIGS

Effects rigs, also known as effects units or pedals, serve as essential tools for musicians and audio engineers, enabling them to modify and sculpt the tone of incoming audio signals to achieve desired sonic outcomes. These rigs encompass a variety of electrical components housed within enclosed boxes, typically constructed from metal or plastic. Within these enclosures, both analogue and digital circuitry are employed, facilitating the manipulation and transformation of the input signal.

Primarily designed to interface with audio inputs, such as those from turntables, and output to devices like mixers, effects rigs are purpose-built systems tailored for specific audio processing tasks. They often feature built-in controls, such as potentiometers, allowing users to adjust various parameters of the effects to their liking. While ready-made effects rigs are available for purchase, offering convenience and immediate use, enthusiasts also have the option to acquire kits for building and customizing their own units, fostering a culture of DIY experimentation and creativity.

The evolution of effects boards traces back to pivotal moments in music history, where technological advancements in electronic music amplification opened doors to new sonic possibilities and artistic expression. As musicians sought ways to expand the tonal palette of their instruments, manufacturers responded by introducing innovative effects.

Among the earliest manifestations of effects pedals was the volume pedal, attributed to DeArmond and introduced shortly after World War II. The DeArmond Tremolo Control, utilizing a small sealed bottle of mercury to modulate volume, marked a significant milestone as the first commercially available pedal for musicians. This ground-breaking invention not only revolutionized the way musicians could manipulate volume but also paved the way for a plethora of effects pedals that would follow, shaping the landscape of modern music production and performance.

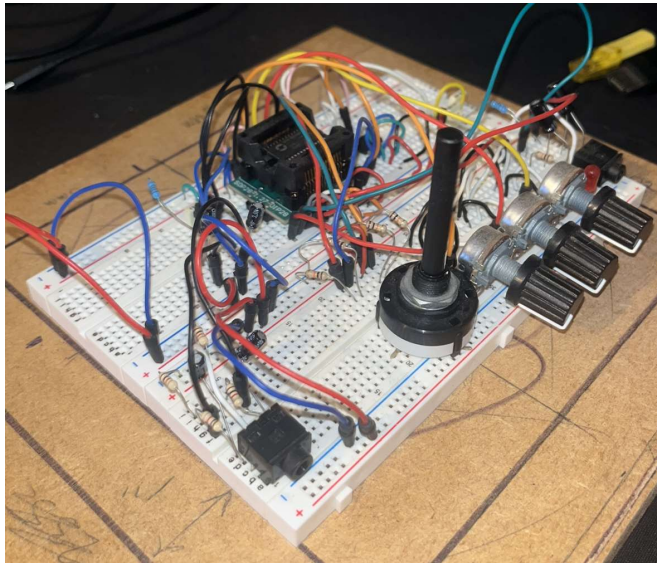

THE FIRST EFFECTS BOARDS

Effects boards have a rich history of changing the way music is played, and aiding in developing new styles of music, ever since the electronic capability of music has increased, and the ability to amplify the instruments has pushed for new sounds and techniques. This form of music amplification then gave manufacturers ways to add further expression to their instruments [3], this being in the form of 'effects'.

The first effects pedal was a volume pedal, this was created by DeArmond shortly after World War 2, this pedal was constructed using a small bottle of sealed mercury that would move back and forth in the enclosure to increase or decrease the volume, [4] this was then called The DeArmond Tremolo Control, and officially became the first commercially available pedal for musicians to use.

TYPES OF EFFECTS

Over the years many different types of effects boards have been developed, and many of these have been put into production for commercial sale and use. Although thousands of different pedals can be found, they all come under 6 main effect categories, each group has its own purpose and use when it comes to adjusting the sound the user wants.

Although the roots of adding effects come from guitar players and manufacturers, effects are now massively used in DJ sets for mixing, and also in every day music production.

DJ mixers also have a wide variety of effects, these can be built in, or purchased as a separate unit, the master output is ran through the effects unit, then connected to the amplifier, or in case of a turn table, a pre-amp is needed. All changes to the signal are then done in this unit before it reaches the output, whether this be a mixer or speaker to the desired effect. An example of the most used effects rig is the Pioneer RMX, this unit also has a built in drum machine, and is something being considered for this project. Unlike guitar pedals, which generally have a single effect to a single pedal, the DJ units typically contain multiple effects, some of these effects can include;

- Delay
- Echo
- Reverb
- Low pass filters
- High pass filters

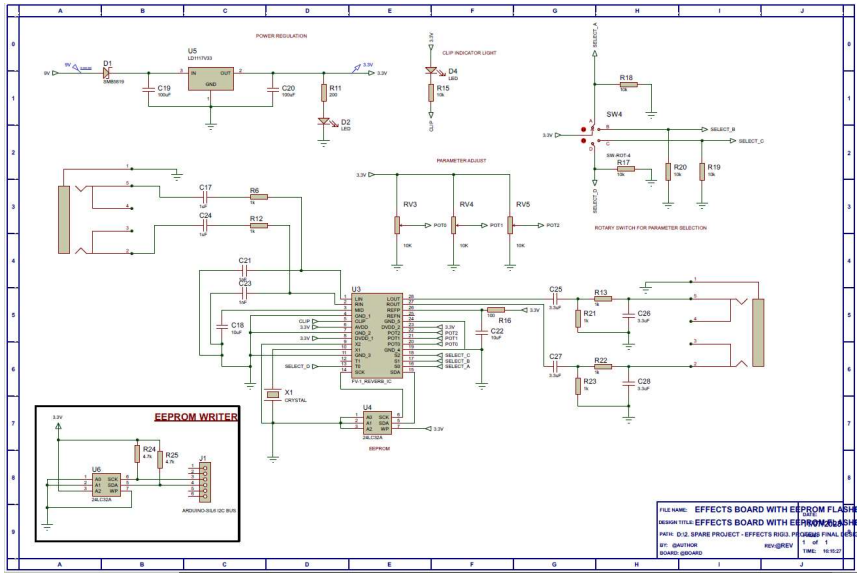

CONCLUSION

During this project there were many things learnt, firstly much was learnt about the design and development of digital signal processing signals, from how individual effects worked and manipulated audio, to how different electronic components can be used in line with purpose built processing chips to manipulate and alter incoming and outgoing signals.

Secondly much was learnt during this project in regards to coding, the original idea for the project was to produce a system which allowed for EEPROM programming, specifically read, write & clear functions, to do this research was undertaken into communication protocols, different available software's, and different hardware options, so doing this allowed me to further my knowledge and understanding of the requirements to communicate with different electronic components,

Much was also learnt about project management and time constraints, this project allowed me to re-evaluate the whole process and aims at the end, which showed that the original aims and focus of the project was directed at the wrong area, in hindsight I would say I have learnt that spending more time on conception and outlining the aims/objectives will allow for better progression through each stage of design and development.