SPRINGFIELD DESIGNS Ltd

BRIDGE OVERVIEW - SCALE 1:500

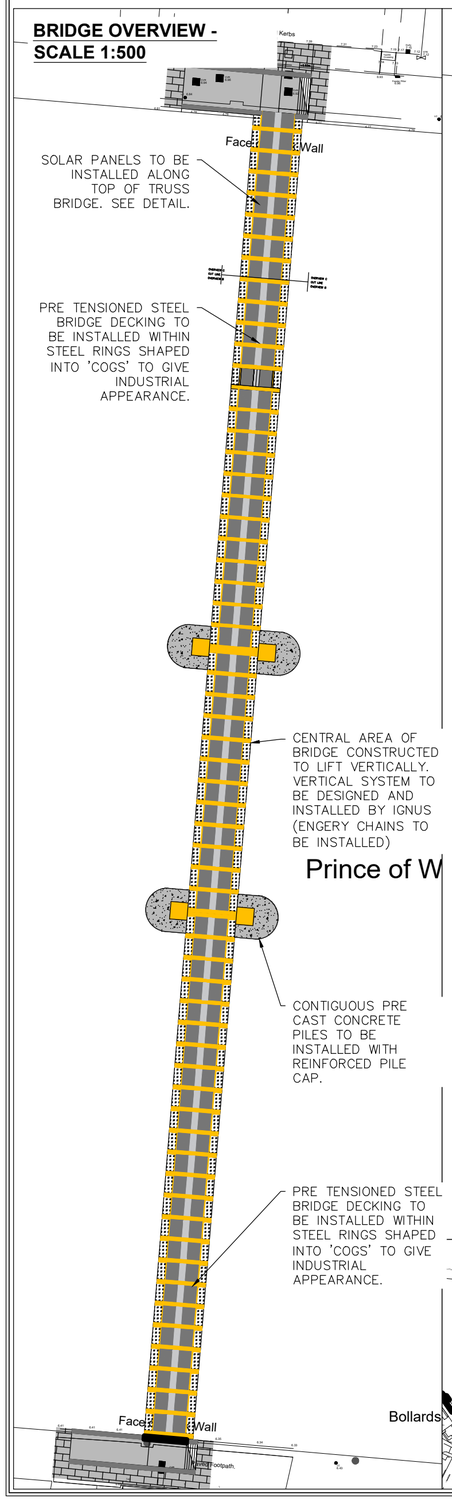

BRIDGE INSERT A - SCALE 1:250

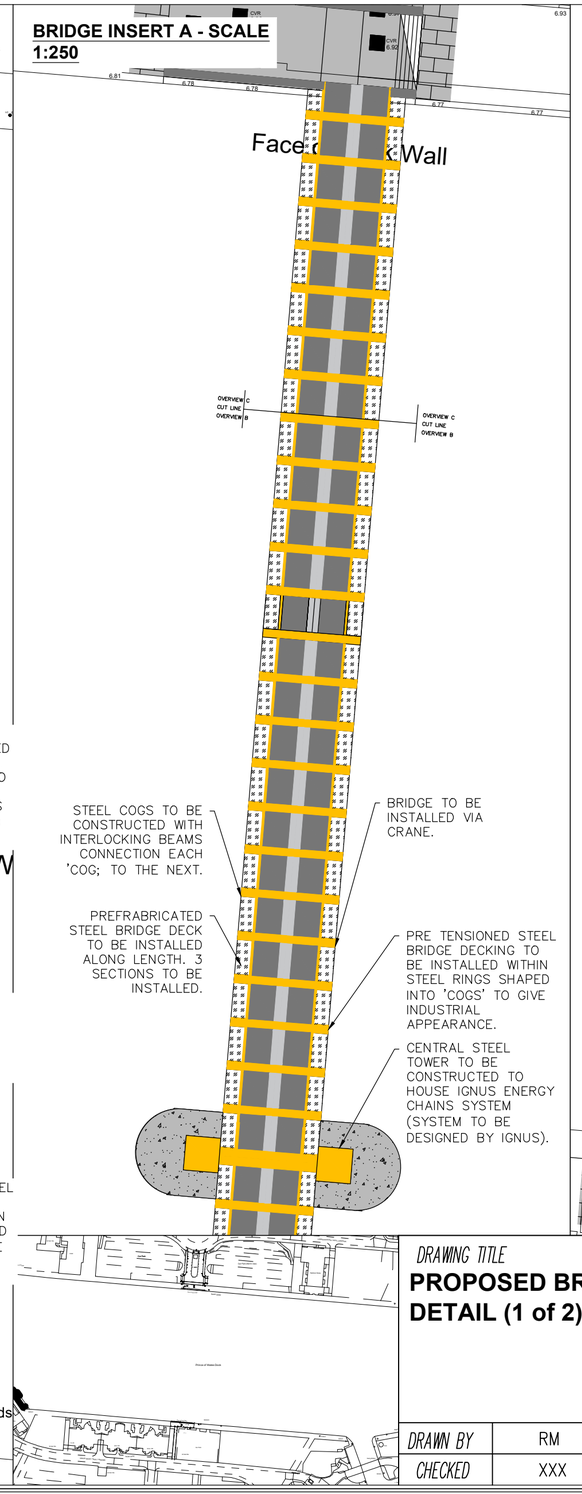

BRIDGE INSERT C - SCALE 1:250

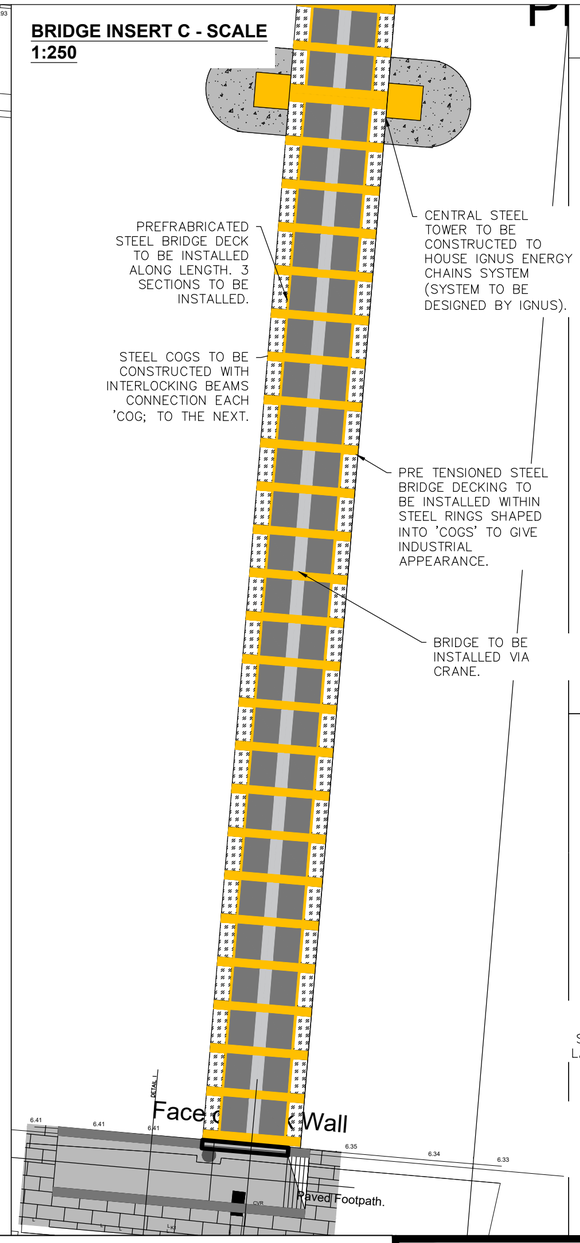

BRIDGE INSERT B - SCALE 1:250

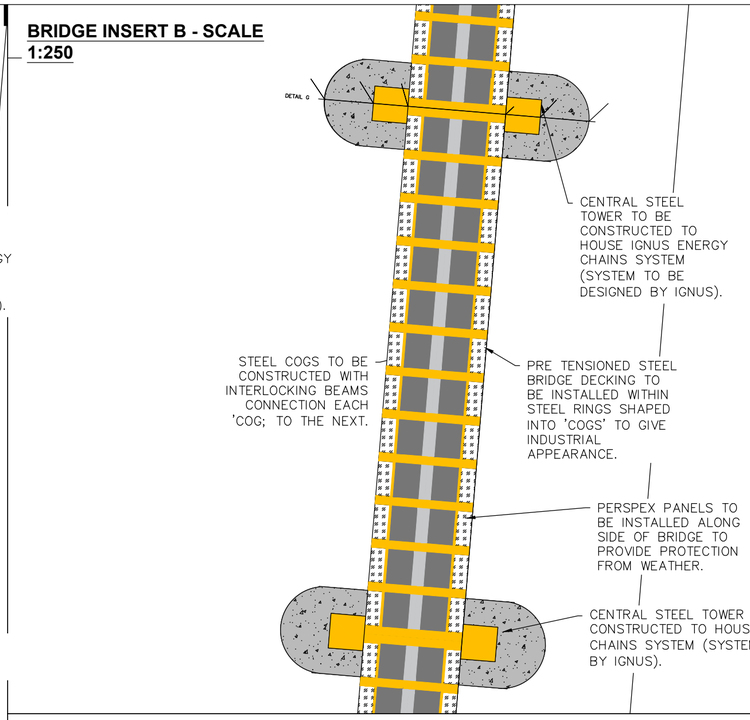

of Wale

DETAIL F - SCALE 1:50

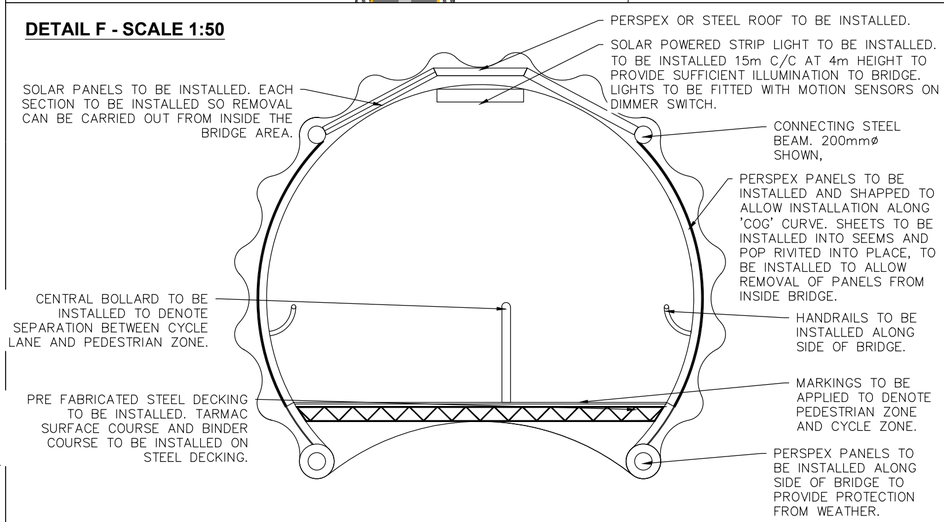

DRAWING TITLE	PROPOSED BRIDGE LAYOUT AND BRIDGE DETAIL (1 of 2)		
DRAWN BY	RM	11/22	SCALE SHOWN
CHECKED	XXX	X/XX	

PROJECT TITLE	ACBA6003 - SPRINGFIELD DESIGNS - PEDESTRIAN BRIDGE
CAD REF.	CAD
PROJECT PHASE	PHASE
REV.	

DRAWING No.	6003-UWTSD-ZZ-ZZ-SP-A-00005

REV.	DESCRIPTION	BY	DATE