Mamiya RZ67 PROFESSIONAL

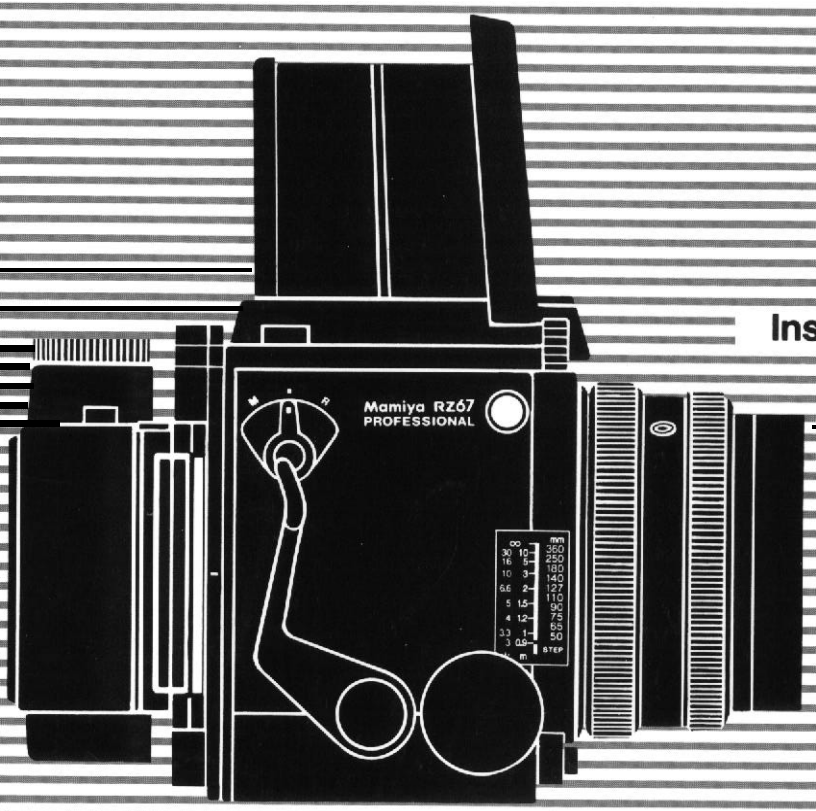

Instructions

Building upon its long experience since the introduction in 1970 of the revolutionary RB67 SLR with revolving back and the later refinements incorporated into the RB67 Pro-S, Mamiya Camera Company has utilized the latest electronic technology in order to fulfill its Commitment to advanced amateurs and professional photographers by producing the ultimate 6 x 7cm camera, the Mamiya RZ67.

The result is a camera with incredible versatility and handling ease. ideally suited for commercial, industrial, scientific, news, portrait, scenic, and fashion photography. In fact, the Mamiya RZ67 knows no bounds in photographic application?.. However, in order to fully take advantage of its capabilities, as well as avoid possible mishandling, be sure to carefully read this instruction manual before attempting to use your new camera.

Contents

Special Features of the Mamiya RZ6 2
Outline of Names and Functions of Parts 4
Inserting a Battery 10
Attaching/Removing Lenses 11
Focusing Hood Operation 12
Releasing the Shutter 14
Shutter Speed and Aperture 17
Focusing and Locking the Focusing Knob 18
The Revolving Back 19
The Roll Film Holder 20
Loading the Film Holder 21
Taking Photographs 24
Unloading the Film 25
Distance Scale/Depth-of-Field 26
Close-up Photography 27
Using a Tripod/Long Exposures 28
Mirror-up Operation 29
Multiple Exposures 30
Flash Photography 31
Close-up Photography with Auto Extension Tubes 32
How to Use fhe Carrying Strap 33
Interchanging Magnifier/Focusing Hood/Focusing Screen 34
Attaching a Lens with Shutter Released or Mirror Raised 35
Camera Back Lock System 37
RB Series Lenses and Accessories 38
Troubleshooting 39
Care of the Camera 40
Mamiya RZ67 Specifications 41

Special Features of the Mamiya RZ67

The following exemplify how the outstanding features of the RB67 have been further refined in the Mamiya RZ67, resulting in unprecedented quality and performance.

1. Ultra Performance Lenses

Without changing the outer diameter of the lens mount on the camera body, the inner diameter of the mount on the RZ67 has been increased by 7mm (from 54mm on the RB to 61mm on the RZ). Furthermore, the flange back (distance of the lens mount to film plane) has been reduced by the same amount (from 111 mm on the RB to 104mm on the RZ).

The increase in size of the diameter of the mount and decrease in the distance of the flange back have made it possible to design a new series of ultra performance lenses designed exclusively for the Mamiya RZ67, offering performance previously believed unattainable. It is now also possible to design new, specialized optics, such as shift or high speed lenses.

Moreover, any RB lenses already in the possession of the photographer can be used on the RZ67 without an adapter or loss in performance.

2. Improved Handling

It is now possible to advance the film and Exposure Counter, set the mirrorand Light Baffle, and cock the lens with a single stroke of the Cocking Lever.

With Winder RZ attached to the camera body, a gentle touch of the electromagnetic release makes it possible to effortlessly take consecutive photographs.

As the revolving back is rotated to change from horizontal to vertical format, or vice versa, the viewfinder masks also simultaneously change automatically, preventing the photographer from seeing anything other than the area actually being photographed.

While retaining the "T" (time) setting on the lens, a "B" (bulb) setting has been incorporated into the Shutter Speed Dial of the camera body for added versatility.

The mirror-up mechanism is now automatically engaged as soon as a cable release is attached to the Mirror-up Socket.

3. Improved Performance

Shutter speed accuracy and durability have been significantly enhanced by utilizing an electromagnetic release and Mamiya's own Moving Coil system in conjunction with the Seiko #1 electronic shutter. Additionally, the longest fixed shutter speed has been increased to 8 seconds, making the camera more flexible than ever.

When the camera is not prepared for use, the shutter release automatically locks and awaming lamp illuminates in the viewfinder, informing the photographer precisely what needs to be done, a red lamp indicating that the Dark Slide must be removed from the Film Holder, and an orange lamp reminding the photographer to advance the Cocking Lever.

When using a Mamiyalite electronic flash, a green LED illuminates in the viewfinder when the unit is fully charged and ready to fire.

For viewfinders with built-in exposure meters, the film speed, shutter speed, and aperture information is electronically transmitted to the exposure meter.

With a Mamiyalite MZ36R or MZ18R attached to the RZ67, aperture and film speed information is automatically and electronically relayed to the flash unit, controlling its light output.

By attaching Winder RZ and Receiver MZ to the RZ67, remote control of the camera is possible with Transmitter MZ, thereby immensely increasing the applications of the camera.

(Special Features Shared with the RB67)

The Ideal Format

The 6 x 7cm format not only offers an area approximately 4.5 x greater than the 35mm negative size, but it enlarges to standard sizes, such as 8 x 1 0", with virtually no cropping, making it possible to utilize the full negative area. Ideally suited for publication and standard print sizes, the 6 x 7cm format makes the ideal choice for professional photographers.

Instant Change in Format

By revolving the back 90°, the photographer can instantly change from horizontal to vertical format, or vice versa. In the RZ67. viewfinder masks also change automatically, totally eliminating the chance of exposing the film with the incorrect composition.

Peerless Film Flatness

After prolonged testing and research, Mamiya has developed Film Holders which solve the problem of film curl by retaining the film perfectly flat across the entire film plane. Thus, the full potential of Mamiya-Sekor ultra performance lenses and the large negative size are realized.

In addition to unparalleled film flatness, the Roll Film Holders also incorporate a double exposure prevention mechanism. with multiple exposure provision as well.

Interchangeable Film Holders

120, 220 and Polaroid holders are available which not only allow the photographer to select a holder in accordance with the application, but also make it possible to change film in mid-roll from color to black and white, or color negative to color reversal.

Viewing Ease

The standard Focusing Hood opens with a single touch. exposing a large: bright image on the Focusing Screen. With another touch, the Magnifier Instantly rises for critical focusing. The four sides of the Focusing Hood totally block the screen from extraneous light so that the image always remains bright and clear, enabling the photographer to work speedily and accurately. Both hood and screen are instantly interchangeable.

Lens Shutter Design

Use of a lens shutter makes it possible to synchronize electronic flash at all shutter speeds, not only eliminating the problem of ghost images (secondary images recorded by available light) occasionally encountered with focal plane shutters, but also enabling the photographer to balance flash illumination with available light.

Mirror-up Photography

For occasions when the camera is mounted on a tripod, both the RB and RZ67 allow the photographer to raise the mirror well before releasing the shutter. Since "mirror shock" is thereby completely eliminated. razor-sharp photographs are still possible when working at high magnifications or long shutter speeds. This feature is especially useful for close-up work, telephoto photography, and use of "slow" shutter speeds.

Built-in Bellows

Since the RB and RZ67 have a built-in bellows with a maximum extension of 46mm, close-up photography is possible without accessories, Moreover. by adding an extension tube, a magnification ratio of greater than 1 : 1 (lifesize) is possible.

Additional Features

The Film Holder can not be removed from the camera back unless the Dark Slide is first inserted into the holder, thereby protecting the film from accidental exposure to light. Additionally, after the holder is removed, the Dark Slide remains locked to the holder, again guarding the film from light.

When using wide-angle lenses, the Focusing Knob of the camera can be locked at the hyperfocal distance for focus-free photography. The Focusing Knob Lock Lever also proves useful when engaged in close-up photography, using telephoto lenses, or taking consecutive exposures of a stationary subject.

Finally, multiple exposures become possible with a mere flickof the RM Lever.

• Outline of Names and Functions of Parts (Detailed instructions follow.)

R-M Lever

For double exposure prevention and normal operation. keep R-M Lever aligned with central index mark.

R: The lever is set to this position before revolving the back.

M: Set the lever to this position when desiring to take multiple exposures. The lever is also kept at this position when releasing the shutter without film in the camera.

Cocking Lever

In a single operation this lever advances the films, cocks the shutter. and sets the mirror. For proper operation. be sure to push the lever completely down.

Dark Slide

As a safety feature. the shutter can not be released unless the Dark Slide is first removed. Make it a habit to first remove the Dark Slide before attempting to take a photograph.

Distance Graduation

A single scale indicating distance in meters and feet is used for all lenses.

Focal Length Scale

Curved lines representing most focal lengths appear on this scale. The point at which the appropriate focal length curve intersects the Distance Graduation indicates the distance focused upon by the lens.

Focusing Knob

Carrying Strap Lug

Focusing Hood Lock Button

To remove the hood, push in on both (right and left) lock buttons and lift hood off camera body.

Lens Alignment Dot

Mirror

Do not touch the mirror under any circumstances.

Shutter Release Jack Cover

Sliding the cover upwards reveals electrical contacts (lack) for an auxiliary shutter release.

Shutter Release Button

Collar Stop Lever

As a safely feature. the Release Button Collar can not be rotated to the orange dot position until the Collar Stop Lever is first depressed.

Release Button Collar

For normal operation the white dot on the Release Button Collar is kept aligned with the white dot on the Collar Stop Lever. Aligning the white dot of the collar with the red dot on the camera body locks the Shutter Release Button. Aligning the collar with the orange dot makes it possible to operate the shutter at approximately 1/400 sec. without batteries in the camera.

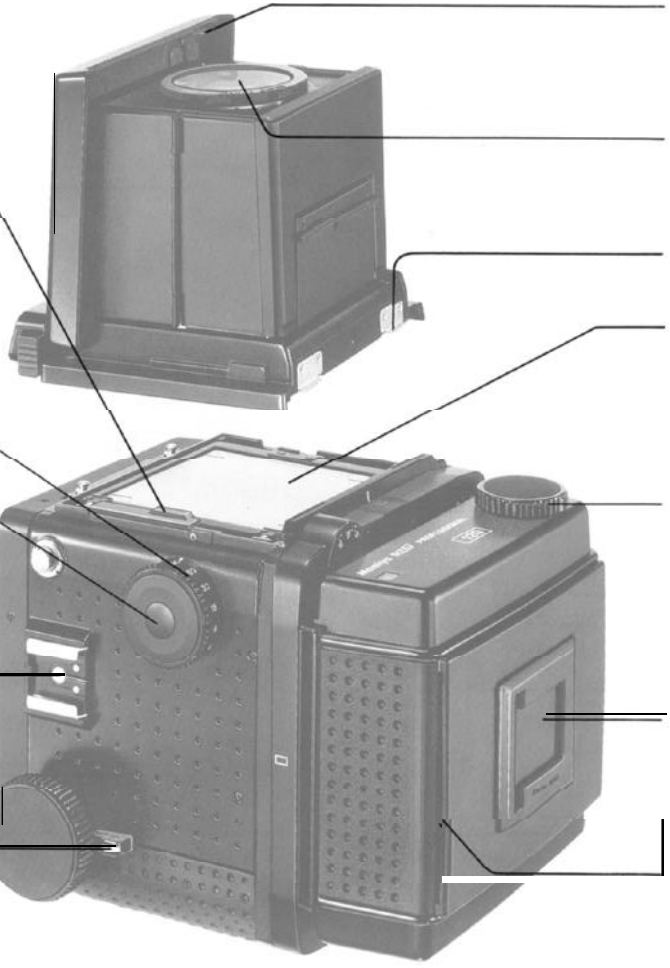

Magnifier Release

To raise the magnifier. push the Magnifier Release to the left.

Magnifier

Interchangeable with other magnifiers in various diopter strengths.

Focusing Hood Catch

Focusing Screen

The visible field of the focusing screen automatically changes from vertical to horizontal format, or vice-versa, as the revolving back is rotated. The screen itself is also interchangable.

Film Advance Knob

Memo Clip

Holds the film box top, or memo, as a film-type reminder.

Dark Slide Slot

Electrical Contact Cover

Remove this cover when using finders with electrical contacts (such as the PD Prism Finder). Be sure to replace the cover if using the RB CdS Finder or RB CdS Prism Finder, for the finder switches will not Operate without the cover in place.

Shutter Speed Dial

Lock Release Button

When the ◉ mark on the Shutter Speed Dial is aligned with the index mark on the camera body, the dial will lock in place.To unlock it, rotate the dial while pushing in on the Lock Release Button.

Hot-Shoe

Focusing Knob Lock Lever

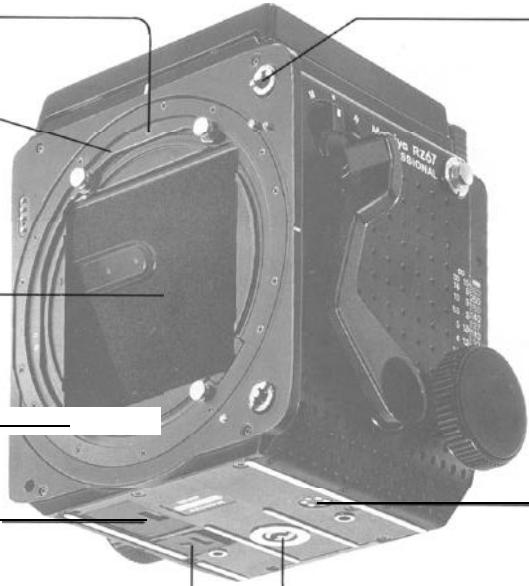

Alignment Mark

Revolving Ring

The small circle appearing on the Revolving Ring should be aligned with either the uppermost ("12 o' clock") or right-hand side ("3 o' clock") index.

Light Baffle

To avoid damaging the camera, do not touch the Light Baffle.

Camera Back Mount Pin

Battery Chamber Cover

The camera uses a 6 volt alkaline or silver oxide battery.

Winder Coupler Cover

Film Advance Coupler

The central pin transmits a signal to the film holder which disengages the film advance-stop and activates the multiple exposure prevention mechanism.

Winder RZ Contacts

Tripod Socket

The socket has standard U 1/4" threads which can be removed, converting it to a 3/8" socket.

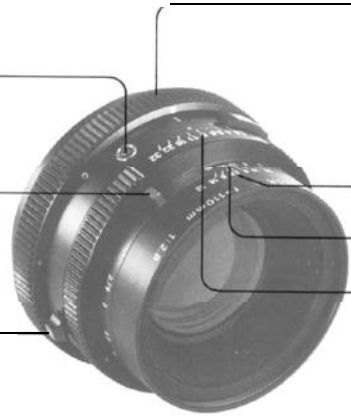

Bayonet Ring

The Bayonet Ring is a breech mount which secures the lens onto the camera body. As a safety feature, the lens can not be removed from the camera body unless the mirror is set (lowered), thereby assisting the Light Baffle in shielding the film from light.

Flash Sync Terminal (X-sync)

Lens Distance Scale Knob

Depth-of-Field Scale

Lens Distance Scale

Aperture Ring

Depth-of-Field Preview Lever

Time Exposure Lever

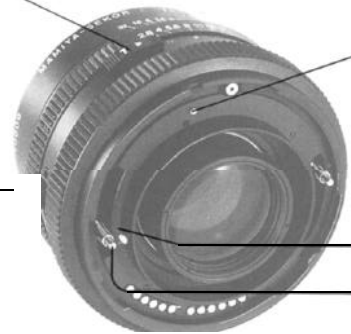

Shutter Lock Pin

When the lens is removed from the camera body. the spring-loaded Shutter Lock Pin emerges. locking the shutter and preventing accidental shutter release. If desired. the shutter can be released by rotating the Shutter Cocking Pins clockwise while depressing the Shutter Lock Pin.

Mirror-up Socket

Merely screwing a cable release into the Mirror-up Socket prepares the camera for mirror-up, or vibration-free, photography. When this is done and the Shutter Release Button is depressed. the mirror and Light Baffle rise. After rising, and any trace of vibration is eliminated, the shutter can be released with the cable release.

Cocking Position Marks

Shutter Cocking Pins

When manually cocking the shutter, be sure to rotate the Shutter Cocking Pins as far as they will go (to the red dot).

Roll Film Holder RZ

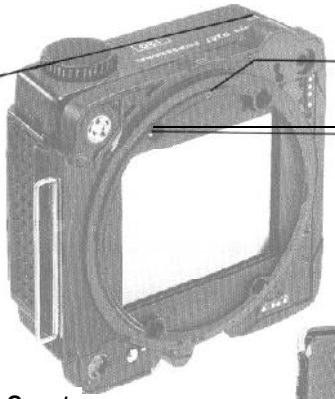

Alignment Mark

Dark Slide Release Pin

When the Film Holder is removed from the camera back, the Dark Slide is automatically locked in the holder, preventing accidental removal. Placing the Film Holder onto the camera back automatically unlocks the Dark Slide, so that it can easily be removed

Film Speed Dial (I-SO)

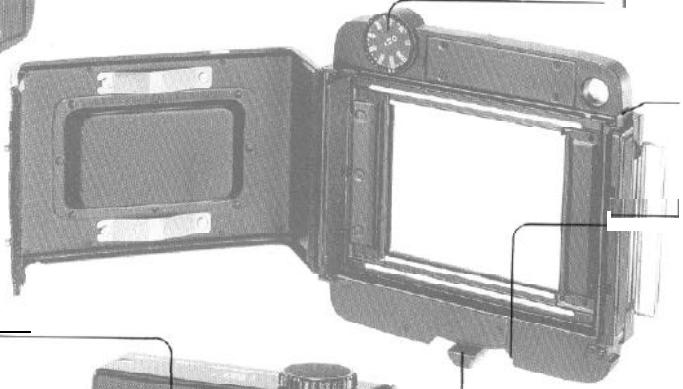

Back Cover Latch

Lock Release Lever

Exposure Counter

After releasing the shutter, a red band appears next to the frame number in the Exposure Counter. Upon advancing the film, the red band disappears, informing the photographer that tie film is advanced and ready to be exposed.

Spool Release Pins

Depress these pins to load or unload a film spool.

Film Spool Stud

A new roll of film is loaded on this stud with the paper leader pulled over the roller in the direction indicated by the dotted line and arrow which appears around the stud.

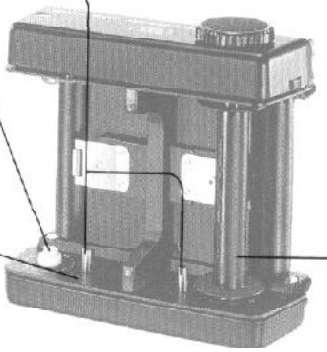

Holder Lock Lever

Should one inadvertently attempt to remove the Film Holder without first inserting the Dark Slide, the Holder Lock Lever will not unlock, thereby preventing accidental exposure of the film to light.

Start Mark

The Film Advance Knob is rotated until the arrow on the backing paper is aligned with this mark. After alignment, the back cover of the film holder is closed, and the film advanced until the numeral "1" appears in the Exposer Counter.

Take-up Spool

Alter removing an exposed roll of film, place the empty spool at this position.

Operating Instructions

RZ67

Inserting a Battery

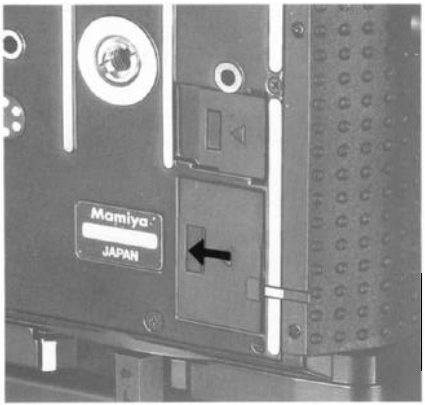

Because the Mamiya RZ67 does not function properly without a battery, be sure to load one into the Battery Chamber before attempting to use the camera.

The camera uses one of either of the following batteries:

4LR44 (6V alkaline manganese battery)

4SR44 (6V silver oxide battery)

1. Pull the Battery Chamber Cover in the direction of the arrowhead to open it.

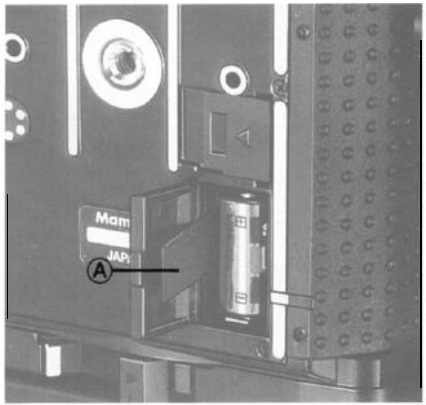

2. Insert the battery into the chamber, taking care to match the ± poles of the battery with those shown in the diagram found in the chamber. Future replacement of the battery will be simplified if the Battery Removal Ribbon (A) is placed under and over the battery.

- Even if battery power is depleted, aligning the Release Button Collar with the orange dot will make it possible to release the shutter at approximately 1/400 sec.

CAUTION:

1. Be sure to match the poles of the battery with those shown in the diagram in the chamber.

2. Carefully wipe the contacts of the battery before inserting it into the chamber. Failure to do so could result in poor electrical contact and consequent erratic functioning of the camera.

3. When not using the camera for a long period of time, remove the battery and store it in a dry, cool place.

4. Used batteries can be dangerous. Consequently, when disposing of a battery. do not place it in a fire or short circuit it.

5. Battery life varies considerably in accordance with the following factors: battery, type, battery brand, freshness of the battery when purchased, the conditions under which the battery was stored before purchase and is stored after purchase, temperature at the time of use, whether the battery receives frequent or intermittent use.

6. Silver oxide batteries have longer battery life than alkaline batteries.

Attaching Lenses

Before attaching a lens to the camera body, the mirror of the body must be set and the shutter of the lens cocked.

(A) Setting the Mirror

1. Remove the Body Cap from the camera.
2. Make sure the mirror is set (lowered). If the mirror is raised, lower it by pushing the Cocking Lever as far as it will go toward the front of the camera body.

(B) Cocking the Lens Shutter

1. Remove the Rear Lens Cap.
2. If the lens shutter is not cocked, firmly rotate the Shutter Cocking Pins as far as they will go (to the red dot). When releasing the pins, they will return to the green dot and the shutter blades will remain open.

- Moving the Shutter Cocking Pins only as far as the green dot will result in incomplete shutter cocking. Be sure to rotate them as far as the red dot.
- Whenever a lens is removed from the camera body it is already Cocked.

(C) Attaching the Lens

1. With the front of the lens facing you, rotate the Bayonet Ring counterclockwise as far as it will go (the white dot on the Bayonet Ring will be aligned with the central index of the lens).
2. Seat the lens on the camera body with the central index of the lens lined up with the red Alignment Dot of the camera body. Next, rotate the Bayonet Ring of the lens firmly in a clockwise direction, securing the lens to the camera body.

Removing Lenses

1. Push the Cocking Lever of the camera body completely down, setting the mirror and cocking the lens shutter.
2. Rotate the Bayonet Ring of the lens counterclockwise as far as it will go (white dot of Bayonet Ring will align with central index of lens) and remove lens.

- If you try to rotate the Bayonet Ring counterclockwise without first depressing the Cocking Lever of the camera body, the movement of the ring will be interrupted, making it impossible to remove the lens. This safety feature assures that the mirror is always lowered whenever the lens is removed, thereby assisting the Light Baffle in shielding the film from light.

Raising the Focusing Hood

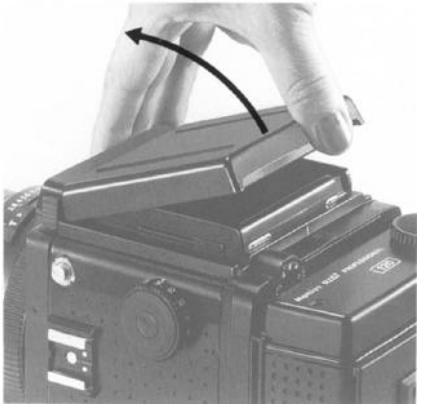

Merely lift the back of the hood until it opens completely.

Raising the Magnifier

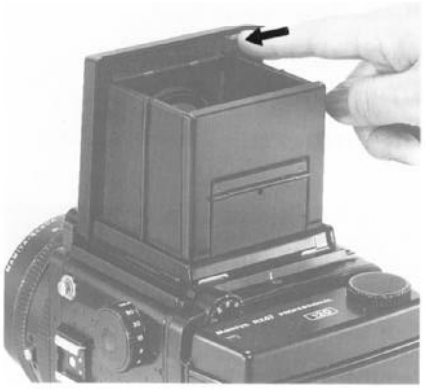

Slide the Magnifier Release slightly to the left and the Magnifier will pop up into position.

Lowering the Magnifier

Gently push the base plate of the Magnifier all the way down until it locks in place.

Folding the Focusing Hood

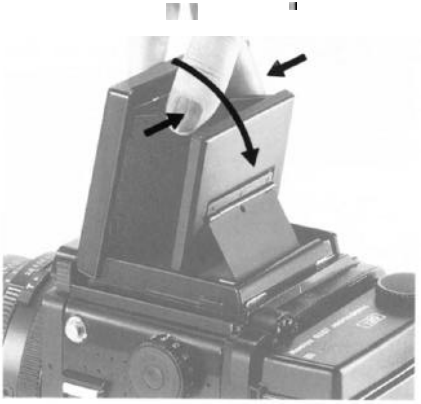

Afler lowering the Magnifier, gently squeeze the right and left panels of the hood together while closing it.

Releasing the Shutter

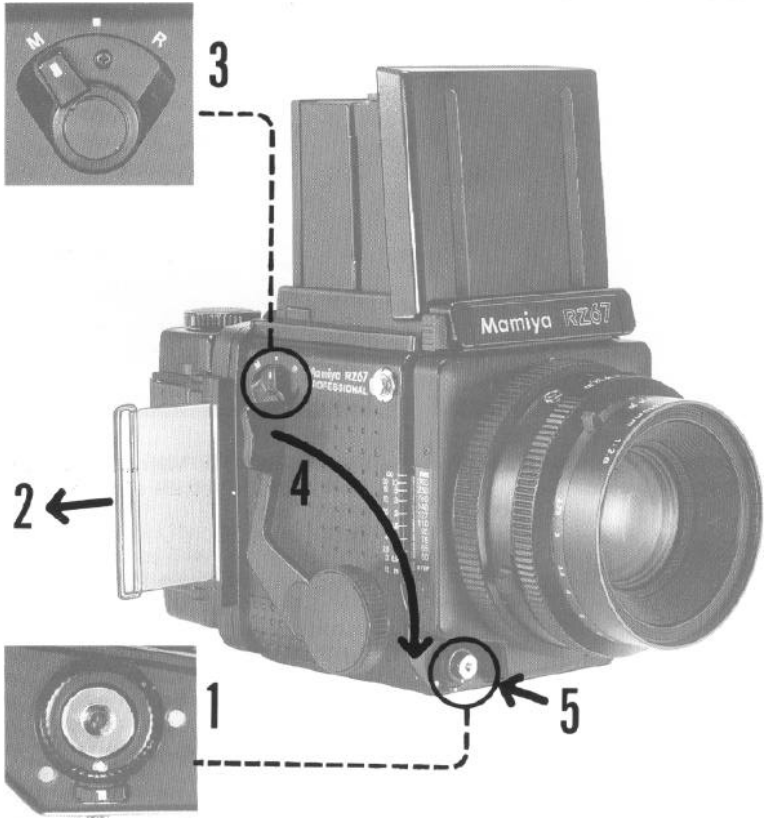

It is best to become acquainted with the method of releasing the shutter before using film in the camera.

1. **Rotate the Release Button Collar until the white dot on it is aligned with the one immediately below (on the Collar Stop Lever).**
2. **Remove the Dark Slide.**
3. **Set the R-M Lever to the "M" (multiple exposure) position.**
4. **Push the Cocking Lever all the way down.**
5. **Press the Shutter Release Button.**

The first 4 steps can be done in any order. After you are thoroughly familiar with the above steps, return the RM Lever to its normal setting (the center position).

Using the Release Button Collar

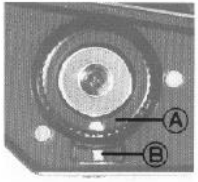

1. For normal operation, align the white dot on the Release Button Collar (A) with the white dot on the lever below (B). When this is done, the Shutter Release functions electromagnetically and the various safety mechanisms operate electrically.

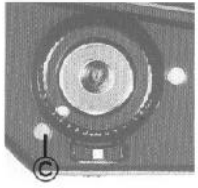

2. When the camera is not in use, lock the Shutter Release Button. This is done by aligning the white dot of the Release Button Collar with the red dot (C) on the camera body. By locking the Shutter Release Button, you not only prevent unintentional exposure of film, but also prevent accidental battery drainage caused by pressure on the Release Button. For this reason, be sure to lock the Release Button when carrying the camera in a bag.

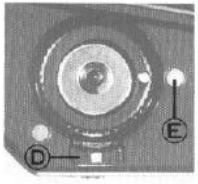

- **Emergency Shutter Operation**

If you were to suddenly find yourself with a dead battery in the midst of a photographic session, switch over to the emergency Shutter operation mode. In order to do so, push the Collar Stop Lever (D) toward the camera body and while holding it there align the white dot of the Release Button Collar with the orange dot (E) on the camera body. The shutter will now operate (even without a battery) at approximately 1/400 sec., regardless of the setting of the Shutter Speed Dial.

Because electricity is not being used in the emergency shutter operation mode, the Monitor Lamps in the viewfinder will not illuminate. Moreover, even if the Dark Slide is not withdrawn, the shutter can still be released, so exercise care.

The R-M Lever

The Normal Position

For normal operation of the camera, the R-M Lever should be kept in the center position, aligned with the index mark. Setting the lever to this position activates the double exposure prevention mechanism so that photo after photo can be taken without fear of accidental double exposures.

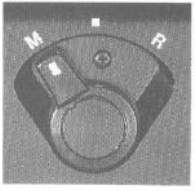

Multiple Exposure Position

When desiring to make deliberate double of multiple exposures, set the R-M Lever to the "M" position. When this is done, pushing down on the Cocking Lever will cock the lens shutter, but will not advance the film. Upon completion of the multiple exposure, do not forget lo return the R-M Lever to its normal (center) position. The lever is also set to 'M' when testing the shutter without film in the camera.

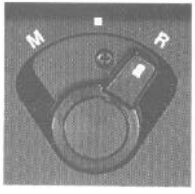

Revolving Back Position

Before revolving the back, set the R-M Lever to the "R" position. After this is done, the lever will automatically return to the normal position when the Shutter Release Button or Cocking Lever is next used.

Operating the Cocking Lever

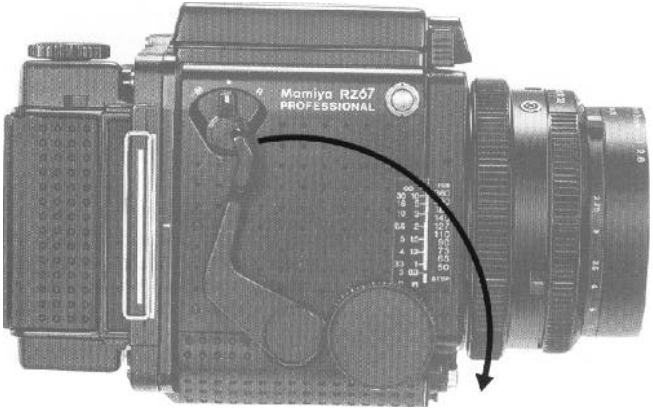

When depressing the Cocking Lever, be sure to push it all the way forward (toward the Shutter Release Button).

If the Cocking Lever is not pressed forward as far as it will go, It will return to its original position when released, but the shutter will not be cocked. At such a time, the shutter will not operate and an orange warning lamp will illuminate in the viewfinder when the Shutter Release Button is depressed.

Depressing the Cocking Lever advances the film, sets the Light Baffle and mirror, and cocks the shutter.

Monitor Lamps

Under the following circumstances an orange, red, or green lamp will illuminate in the viewfinder when the Shutter Release Button is depressed.

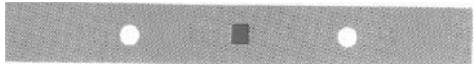

1. Cocking Lever Not Set (Orange warning lamp)

If the Cocking Lever has not been depressed or has been only partially depressed, an orange warning lamp will illuminate in the viewfinder when the Shutter Release Button is pressed, warning the user that the film has not been advanced, the mirror not been set, and the shutter not been cocked.

2. Dark Slide in Holder (Red warning lamp)

When attempting to take a photograph without removing the Dark Slide from the Film Holder, the Shutter Release Button will lock and a red warning lamp acts as a reminder to withdraw the Dark Slide.

3. Mamiyalite Charged (Green signal lamp)

When a Mamiyalite ZE, MZ 18 R, or MZ 36 R is connected to the Hot-Shoe and fully charged, a green lamp will illuminate upon pressing the Shutter Release Button halfway, indicating that the flash unit is ready to fire.

4. Battery Check

To check the condition of the battery, insert the Dark Slide into the Film Holder and depress the Shutter Release Button; the red warning lamp should illuminate with a steady glow. If the red lamp flickers, it indicates that battery voltage is low and the battey should be replaced as soon as possible.

Shutter Speed and Aperture

The Shutter Speed Dial

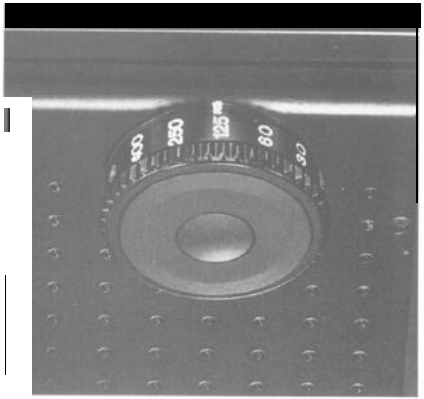

Select the shutter speed desired and rotate the Shutter Speed Dial until the appropriate figure is aligned with the shutter speed index mark.

The Shutter Speed Dial must be set to a click-stop position and can not be used at in-between settings.

The numerals as they appear on the dial and the shutter speeds they represent are shown in the following table.

When the Shutter Speed Dial is set to “B” (bulb). the shutter will remain open as long as pressure is applied to the Shutter Release Button and will close as soon as pressure is released.

The ◉ mark which appears between “B” and 400 on the Shutter Speed Dial is the setting for the AE Finder (which will be available in the future). When set at this position. the dial locks in place. To unlock it, rotate the dial while depressing the Lock Release Button which appears in the center of the dial.

The Aperture Ring

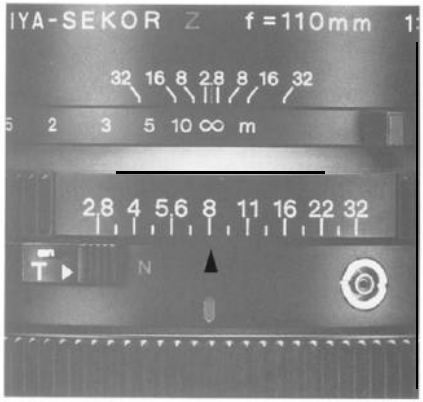

To set the diaphragm to a desired aperture, rotate the Aperture Ring until the appropriate figure is aligned with the central index line. It is perfectly acceptable to use the Aperture Ring at in-between click-stop settings.

When the Shutter Release Button is depressed, the diaphragm will automatically stop down to the preselected aperture before the shuner opens for the exposure.

	Fractions of a second	Wholeseconds
Numerals	400 250 125 60 30 15 8 4 2	1 2 4 8
Shutter peed	1/400 1/250 1/125 1/60 1/30 1/15 1/8 1/4 1/2	1 2 4 8

Focusing and Locking the Focusing Knob

Focusing

Depressing the Cocking Lever sets the mirror. projecting a bright image on the focusing screen. Focus by rotating to-and-fro either of the two Focusing Knobs until the image appears sharp.

Locking the Focusing Knob

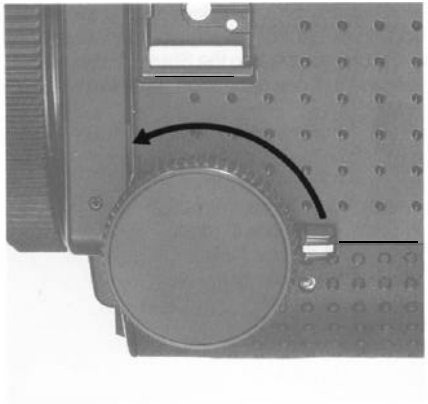

After adjusting the focus, focusing deviation can be prevented by locking the Focusing Knob with the Focusing Knob Lock Lever, which is found at the rear of the left-hand Focusing Knob. Simply raise the lever and push it forward. clamping the Focusing Knob in place.

When working with wide-angle lenses, the lens can be prefocused at the hyperfocal distance, and the knob locked with the Focusing Knob Lock Lever so that snap-shots can freely be taken without the need of focusing. Examples of other occasions on which the lock lever will prove useful include when copying, engaging in macrophotography, or using telephoto lenses.

The Revolving Back

The Vertical and Horizontal Formats

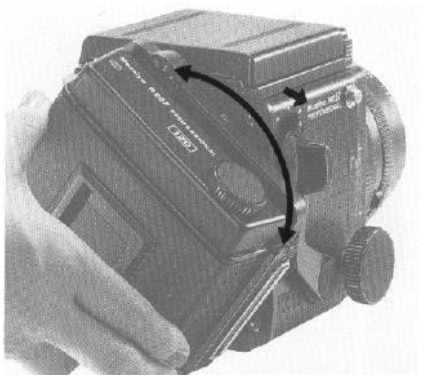

Before attempting to revolve the back, set the R-M Lever to "R" To change from horizontal to vertical format, rotate the Film Holder clockwise as far as it will go. Rotating it counter-clockwise, changes the format from vertical back to horizontal.

Be sure to rotate the Film Holder gently, as undue use of force can result in damage to the camera.

The R-M Lever will automatically return from "R" to its normal position upon depressing the Cocking Lever or Shutter Release Button. However, as long as the R-M Lever remains at the "R" setting, the Film Holder can inadvertently be moved of-center. Consequently, we recommend manually returning the lever to its normal position (center index mark) immediately after revolving the back.

Change in Viewfinder Format

As the revolving back is rotated. the viewfinder format automatically changes from horizontal to vertical, or vice versa. This is accomplished by viewfinder masks which are coupled to the revolving back.

Additionally, when viewed from the top, a small rectangle appears at the upper edge of the Film Holder. Visible at a glance, this rectangle acts as a reminder, indicating whether the holder has been set for the vertical or horizontal format.

The Roll Film Holder

Attaching the Holder

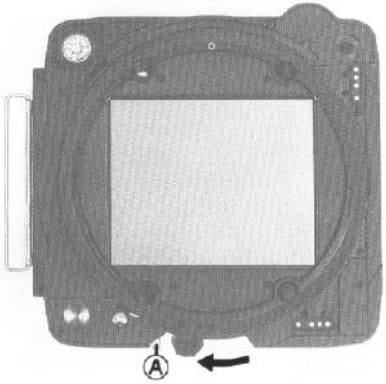

Remove the rear body cap by sliding it upwards.
CAUTION: Do not touch the Light Baffle or mirror.
Touching the Baffle could result in a light leak or malfunction.

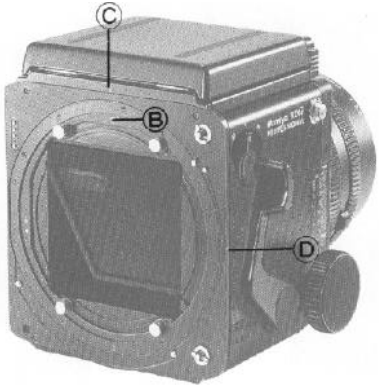

1. Slide the Holder Lock Lever of the Film Holder completely toward the Lock Release Lever (A).
2. Align the orange circle (B) of the Revolving Ring (found at the rear of the camera) with one of the two white index marks on the camera body.
Hold the Film Holder so that its orange circle is at the same position as the one on the Revolving Ring (B) and fit the holder onto the camera back, taking care that the four Camera Back Mount Pins fit into the four openings of the holder

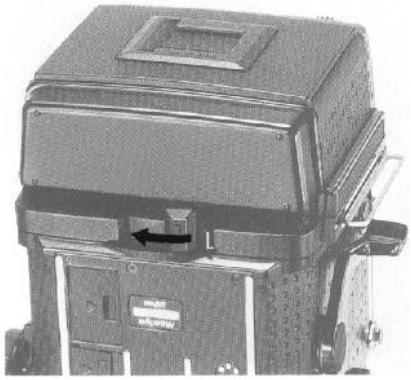

3. Lock the holder on the camera body by moving the Slide Lock as far as it will go in the direction of the arrow.

Removing the Holder

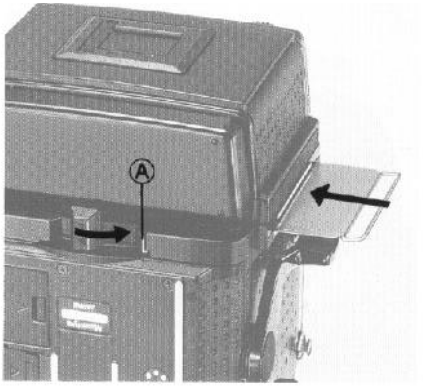

4. Insert the Dark Slide into the Roll Film Holder. For instant recognition, the Dark Slide Slot is bordered by white reference lines.

The Film Holder can be removed after moving the Holder Lock Lever as far as it will go toward the Lock Release Lever (A). It is recommended that you remove the holder on a table or similar support, or in your lap, to avoid the possibility of dropping the holder or having it fall off the camera.

If you attempt to remove the holder without replacing the Dark Slide, the Holder Lock Lever will automatically lock in place. preventing accidental removal of the holder and exposure of the film.

However, if you must remove the holder without the Dark Slide in place. the automatic lock can be overridden by pulling the Lock Release Lever toward the Holder Lock Lever, holding the lever there, and then moving the Lock Lever.

1. Pull out the upper and lower Back Cover Latches and the back cover will open.

Because of the double safety lock, pulling out just one of the two Back Cover Latches will not open the back cover.

After opening the back cover of the Roll Film Holder, remove the Film Insert. When loading film, it is not necessary to remove the holder from the camera back.

When loading film, avoid direct sunlight, either loading the film in the shade or turning your body away from the sun and loading it in the shade of your own body.

2. While holding down the left-hand Spool Release Pin of the Film Insert, fit a roll of film between the upper and lower left-hand Film Spool Studs.

Pull the backing paper in the direction of the dotted line and arrow around the stud, over the roller, across the back, over the right-hand roller, and feed it into the Take-up Spool. When loaded correctly, the inside of the backing paper (black side) will appear outside of the insert back. If it does not, remove the roll of film, turn it upside-down, and reload it.

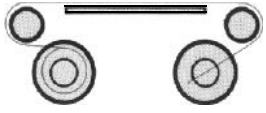

Loading the Film Holder

3. After feeding the tip of the backing paper into the slot of the Take-up Spool.

4. Gently wind the Film Advance Knob until the arrow of the backing paper aligns with the insert Start Mark.

As you gently advance the backing paper, make sure it advances evenly between the spool flanges and does not begin to slant. If it advances unevenly, remove the backing paper from the Take-up Spool and refeed, starting again. Heeding this point will eliminate the possibility of crinkling the edge of the film.

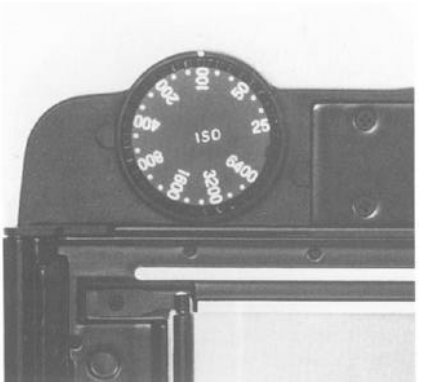

5. Set the correct film speed value on the Film Speed Dial of the Roll Film Holder.

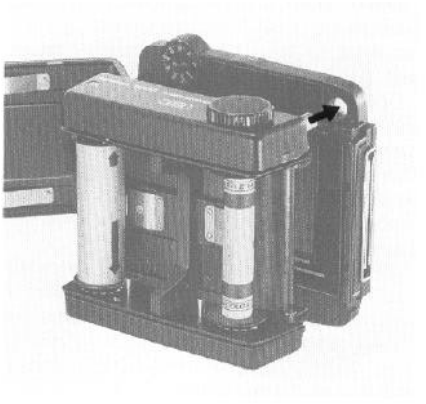

6. Place the Film Insert into the outer cassette, making sure the film advance coupler of the insert fits into the appropriate opening of the cassette.

7. After correctly placing the insert into the cassette, close the back cover, and while gently holding it in place, push both of the Back Cover Latches as far as they will go.

The RZ Roll Film Holder outer cassette will accept either 120 or 220 Film Inserts .

Advancing the Film

Before attempting to advance the film to the first frame, make sure the R-M Lever is set to its normal (center) position. If the lever is set to 'M (multiple exposure), it will not be possible to advance the film with the Cocking Lever.

The film can be advanced in either of two ways.

A) By winding the Film Advance Knob of the Film Insert until it stops.

B) By pressing the Cocking Lever of the camera body several times, until it stops. (The lens shutter will not be cocked unless the Cocking Lever is consecutively pressed until it stops.)

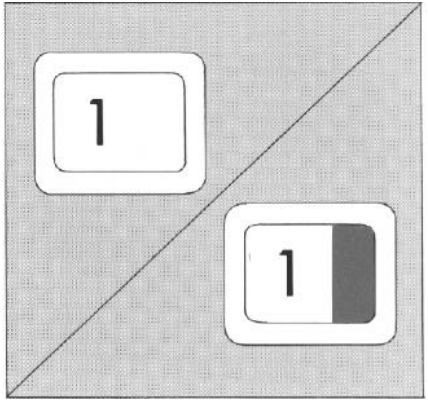

When the film is completely advanced, the numeral '1' will appear in the Exposure Counter and the red, film-unadvanced warning will disappear.

While advancing the film from S (start) to 1 with the Cocking Lever, the shutter releasing mechanism is automatically locked until the film is fully advanced to frame 1.

After removing the Dark Slide and releasing the shutter, the red warning mark will reappear in the Exposure Counter, indicating that the exposure has been made and the camera needs to be set for the next exposure.

When the film is advanced to the next frame, the numeral in the Exposure Counter will automatically change and the red mark will disappear.

Operate the Cocking Lever gently. If if is pressed very rapidly, the spacing between frames may not be uniform.

After an exposure is made, the automatic double exposure prevention mechanism will make it impossible to release the shutter until the film is advanced.

After completing the last exposure, press the Cocking Lever several times, until the film and backing paper is completely wound onto the Take-up Spool. Instead of using the Cocking Lever, you can use the Film Advance Knob of the Film Insert, if you prefer.

Unloading the Film

1. Open the back cover of the Film Holder and remove the Film Insert.

2. While holding down the right-hand Spool Release Pin, remove the film, exercising care that the backing paper does not unroll or become loose.

3. In preparation for the future, remove the empty spool from the Film Insert, replacing it on the right-hand side so that it will act as the new Take-up Spool.

When the back cover of the holder is opened, the Exposure Counter will automatically return to "S" (Start).

If anything other than 's' appears in the Exposure Counter, it indicates that there is film in the holder. To prevent accidental exposure of the film to light, always check the Exposure Counter before opening the back cover of the holder.

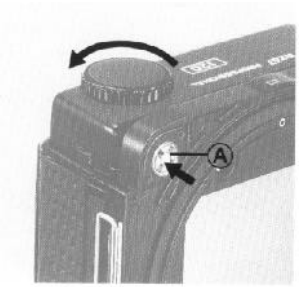

When desiring to turn in for processing a roll of film that has been only partially exposed, first remove the holder after inserting the Dark Slide. Next, while holding in the pin in thecenter of the coupler(A), completely wind the film onto the Take-up Spool with the Film Advance Knob. Instead of continuously holding in the coupler pin, you can push it in once after each frame, if preferred.

During exposures, the Dark Slide can be stored in the Dark Slide Slot in the back of the holder.

The Memo Clip on the back cover can be used for holding the film box-top as a film reminder or for holding a piece of paper with special notes

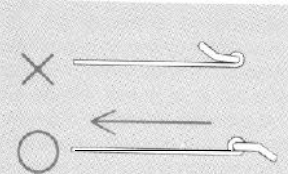

Distance Scale

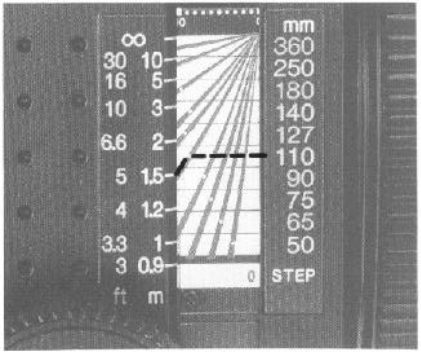

The Distance Scale is used to determine the film-plane-to-subject distance. The scale itself is composed of two parts, the Distance Graduation and Focal Length Scale.

After focusing, the correct distance can be determined by locating the point at which the curved line for the focal length in use intersects the Distance Graduation.

For example, tithe 110mm lens is mounted on the camera and focused as shown in the illustration, the subject is 1.5m (5 ft) from the film plane.

Depth-of-Field

Depth-of-Field Preview

1. Set the Aperture Ring to the desired f-stop and focus the lens.
2. Depress the Depth-of-Field Preview Lever of the lens and you will be able to check the depth-of-field directly on the focusing screen.

Using the Depth-of-Field Scale

1. Check the camera-to-subject distance on the Distance Scale.
2. Rotate the Lens Distance Scale Knob until the previously noted camera-to-subject distance is aligned with the center index of the Depth-of-Field Scale.
3. Locate the selected aperture on both sides of the Depth-of-Field Scale.
4. The figures of the Lens Distance Scale, appearing above the selected aperture, indicate the nearest and furthermost limits of sharpness for that aperture.

For example, when the 110mm lens is focused at 3m and stopped down to f/32, everything from approximately 2m to 10m will be in focus.

When desiring to know the depth-of-field in feet, rotate the Lens Distance Scale 180°, as one side is in feet and the other in meters.

Exposure Compensation for Close-up Photography

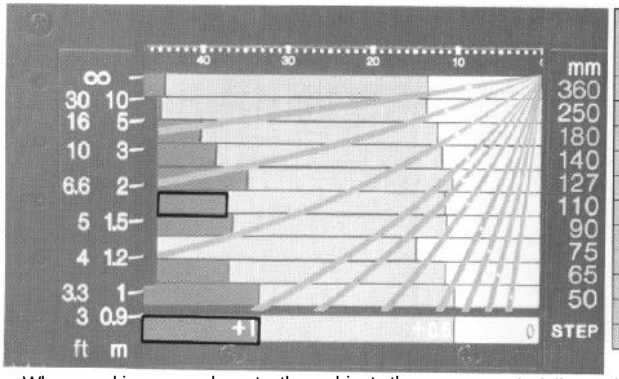

Area Covered with Bellows fully Extended

LENS	Subject Distance (from lens front rim)	Magnification	Area Covered
Fisheye 37mm f/4.5	6.4 mm	1.23	4.5× 5.6 cm
50mm f/4.5	4.5 cm	0.9	6.2× 7.7 cm
65mm f/4	9.1 cm	0.7	8.0×10.0 cm
90mm f/3.5	19.7 cm	0.51	11.0×13.6 cm
110mm f/2.8	31.3 cm	0.42	13.5×16.7 cm
127mm f/3.8	44.1 cm	0.36	15.5×19.2 cm
Macro 140mm f/4.5	50.9 cm	0.33	17.0×21.1 cm
180mm f/4.5	85.4 cm	0.26	21.9×27.2 cm
250mm f/4.5	1 m 57 cm	0.19	29.7×36.9 cm
360mm f/6	3 m 38 cm	0.13	43.2×53.6 cm
500mm f/8	6 m 15 cm	0.09	59.7×74.0 cm

When working very close to the subject, the exposure must be increased. The actual exposure factor will vary in accordance with the distance that the lens is extended. This is simply because the brightness of the image striking the film grows increasingly dimmer as the lens is progressively moved further from the film plane.

Exposure compensation is easily determined by referring to the Exposure Compensation Scale.

1. After focusing the lens, read the exposure compensation factor on the scale. The scale is divided into three zones of light, medium, and dark shades. As indicated by the table at the base of the scale, the light zone represents an exposure factor of zero (no compensation is necessary), the medium shaded zone indicates +0.5 (a 1/2 stop increase in exposure is required), and the dark zone denotes a factor of + 1 (a full stop increase in exposure is necessary).

To find the exposure factor, first locate the figure on the Focal Length Scale for the lens in use. Next, move along the scale, in the same column, until you reach the Distance Graduation. The shading of the zone (light, medium, dark) which touches the Distance Graduation indicates the correct exposure factor. For example, when the 110mm lens is focused as shown in the illustration, the correct exposure factor is + 1.

2. Compensate the exposure by changing either the shutter speed or aperture. When the exposure factor is +1, either open the aperture or lengthen the shutter speed by a full stop. With a factor of +0.5, open the aperture by a half-stop. For example, assume that a hand-held exposure meter indicates a normal exposure reading of f/16 at 1/60 sec., for exposure compensation of + 1, set the lens to either f/16 at 1/30 sec. or f/11 at 1/60 sec.

When using a finder with a built-in meter, such as the PD Prism Finder, there is no need to compensate for close-up photography.

- For optimum clarity at the corners when using the 50mm and 65mm wide-angle lenses at distances closer than 1 meter, use as small an aperture as possible.
- The bellows extension in millimeters appears on the top of the Focal Length Scale. These figures are used to determine the required exposure compensation factor when using extension tubes.

Using a Tripod

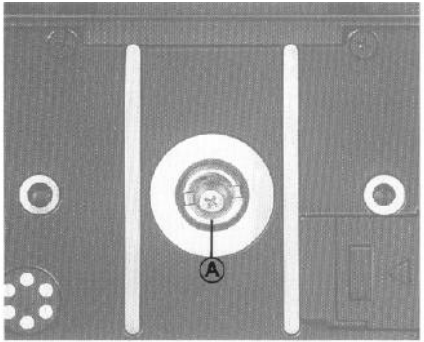

For optimum quality, use of a large, sturdy tripod is recommended.

1. The Tripod Socket will accept standard size (U 1/4" thread) tripod screws without modifica-lion. Simply attach the RZ 67 as you would any other camera with standard threads.

2. When using a tripod with a 3/8" screw, first remove the small screw in the base of the Tripod Socket of the camera by rotating it counterclockwise with an appropriate screwdriver. Next, use a coin to remove the 1/4" adapter (A) from the Tripod Socket by rotating it counterclockwise. The camera can then be mounted on a 3/8" screw tripod.

Long Exposures

Bulb (B) Exposures

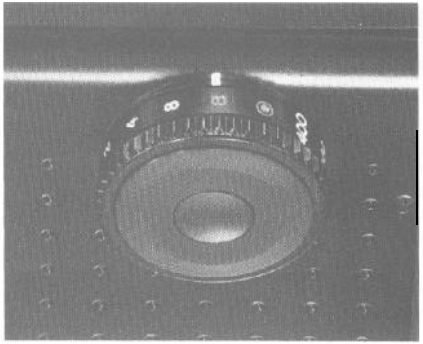

When the Shutter Speed Dial is set to B, the shutter will remain open as long as the Shutter Release Button remains depressed. Since bulb exposure is also controlled electronically, the shutter will automatically close after approximately one minute in order to prevent inadvertent battery depletion. When using bulb, if the Shutter Release Button is depressed for approximately 50 seconds, a warning buzzer will sound. If pressure on the Release Button is maintained, the buzzer will continue for about 10 seconds longer, after which the electricity will be automatically extinguished and the shutter will close. When desiring to take exposures of longer than one minute, use time exposures.

When using bulb, if pressure is released from the Shutter Release Button too quickly (before the mirror completes its upward travel), the shutter may remain open. To correct this situation, press the Shutter Release Button once again, upon releasing pressure the shutter will close. If you do not correct the situation yourself. the buzzer will sound after approximately 50 seconds, 10 seconds the buzzer will stop and the shutter close.

Mirror-up Operation

Time Exposures

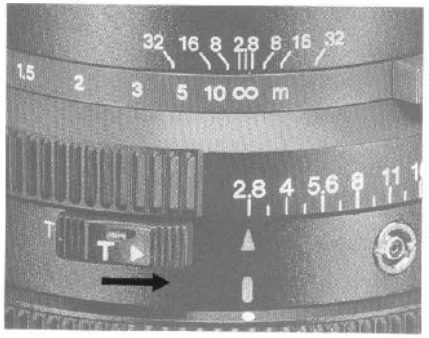

1. To make a time exposure, first slide the T Lever of the lens until the letter "T" is exposed. After doing so, the shutter will remain open upon depressing the Shutter Release Button. At this time, the setting of the Shutter Speed Dial on the camera body is inconsequential.
2. To close the shutter, slide the T Lever in the opposite direction, exposing the letter 'N' (normal). During time exposures, do not touch the Cocking Lever until the shutter closes.

Since the shutter operates mechanically, not electronically, during a time exposure, there is virtually no expenditure of battery power, and the length of time the shutter remains open is insignificant.

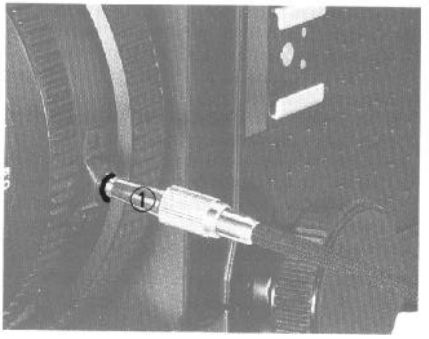

With the RZ 67, it is possible to lock the mirror in the up position beforehand, and at the desired instant release the shutter without the usual accompanying mirror movement.

Referred to as, "mirror-up operation," this technique is extremely valuable when desiring to eliminate even the slightest mirror shock. Because the mirror normally rises and causes vibrations the very instant before the shutter opens, a loss of sharpness is possible when working at high magnifications or with long shutter speeds. Consequently, mirror-up operation is especially useful when engaging in close-up photography, using telephoto lenses, and making long ("slow") exposures. Yet another application is when trying to catch the peak of action. By raising the mirror beforehand, the shutter can instantly be released, totally eliminating the time lag usually present between the time the mirror completes its upward swing and the time the shutter opens.

1. After screwing a cable release firmly into the Mirror-up Socket of the lens, the socket will elevate slightly and the camera will be ready for mirror-up operation.
2. Press the Cocking Lever as far as it will go. Step 2 may either follow or precede step 1.
3. Depress the Shutter Release Button. The mirror will rise, but the shutter will remain closed.
4. Press the plunger of the cable release and the shutter will operate.
5. When you no longer need mirror-up operation, remove the cable release.

Upon removing the cable release, the ,Mirror-up Socket will retract and the camera will return to normal shutter operation.

If you complete step 3 above, but remove the cable release without making an exposure (step 4), the shutter will be released as soon as the cable release is removed.

Even when using mirror-up operation, everytime the shutter is cocked, the mirror is relowered. Therefore, it is possible to check the viewfinder before each frame is exposed.

A convenient double cable release is available as an accesory. Since one end of the release screws into the Shutter Release Button and the other end into the Mirro-up Socket, if is possible to use the same release to raise the mirror and later release the shutter.

CAUTION

- As long as a cable release remains attached to the Mirror-up Socket, it is possible to use the same release to raise the mirror and later release the shutter. Photograph by merely pressing the Shutter Release Button.
- If the red line around the Mirror-up Socket is still visible when the cable release is removed, the camera is still set for mirror-up operation. If such is the case, reattach the cable release, making sure that the socket retracts as you remove it once again.

. The shutter should be released with the cable release within 50 seconds of pressing the Shutter Release Button. If this is not done, the buzzer will sound after 50 seconds and continue for 10 seconds before stopping.

. If you release the shutter with the cable release after the buzzer stops, the shutter speed will be 1/400 sec. If you wish to use a shutter speed other than 1/400 sec. after the buzzer stops, follow the procedure for multiple exposure.

Using Bulb with Mirror-up Operation

1. Attach cable release to Mirror-up Socket.
2. Set the Shutter Speed Dial to B
3. Press the Shutter Release Button (mirror rises).
4. Press plunger of cable release (shutter opens).
5. Press Shutter Release Button (shutter closes).

1. Set the R-M Lever to 'M' (multiple exposure). The lever can be moved to 'M' either before or after releasing the shutter.

2. Press the Cocking Lever as far as it will go in order to cock the shutter and set the mirror. The film will not move at this time. The shutter can now be released, creating a double exposure. This procedure can be repeated as often as desired.

When photographing the same subject 2 or more times exposure compensation is necessary. The same is true with different subjects that are all evenly illuminated. With subjects of different brightness, the darker one is normally photographed first. However, it is not within the scope of this operating manual to teach multiple exposure technique, as many excellent books dealing with this subject are already available.

After completing your multiple exposure, immediately replace the R-M Lever to its normal postion. If this is not done, the shutter may later be released mistakenly, not only ruining the multlple exposure, but also ruining the additional exposure.

Flash Photography

Attaching Flash Units

Compact, clip-on units can be attached directly to the Hot-Shoe of the camera.

When using large, grip-type units, attach the sync cord to the flash to the Flash Sync Terminal (X-sync) of the lens.

When using the Mamiyalite ZE, MZ 18 R, or MZ 36 R, and pressing the Shutter Release Button halfway, the green monitor lamp in the viewfinder will illuminate if the flash is fully charged and ready to fire. When using Mamiya flash units, two units can be fired simultaneously by connecting one unit to the Hot-Shoe and the other to the Sync Terminal.

However, if the same procedure were followed with flash units of other makes, damage may result to the camera or flash units. Therefore, if using flash units of other makes, be sure to use only one at time (unless others are fired by slave units).

Determining the Aperture

When using automatic flash units, refer to the instructions of the flash unit for the correct apertures to use.

When using a manual electronic flash unit or flash bulbs, the guide number divided by the subject distance gives the correct aperture to use.

$$\frac{\text{G.N. (48)}}{\text{Subject Distance (6)}} = \text{Correct aperture setting (8)}$$

Flash Synchronization Table

Flash Type	Shutter Speed	
	8 sec.-1/30	1/60-1/400
Electronic	Yes	Yes
M-class bulb	Yes	No

Close-up Photography with Auto Extension Tubes

After attaching an auto extension tube to a lens, treat the extension tube/lens combination as a single unit, attaching and removing them from the camera as any other lens. Moreover, when using the auto extension tubes, diaphragm automation of the lens is fully maintained sot hat close-up photography is as convenient as standard operating procedure.

CAUTION

1. Because of the extraordinarily shallow depth-of-field encountered in close-up photography, use as small an aperture as possible.

2. Mirror-up operation is recommended for optimum results.

3. When using a finder with built-in exposure meter, exposure compensation is not necessary. However, when working with a handheld meter, compensation is required. Refer to the individual instructions that come with the auto extension tubes.

Close-up Table

Lens	Extension Tubs	Magnification	Subject Distance (cm)	Area Covered (cm)
90mm f/3.5	No. 1	0.50~1.01	20.1~11.0	(11.2×13.9)~(5.5×6.9)
	No. 2	0.91~1.42	12.0~ 8.4	(6.1×7.6)~(3.9×4.9)
	No. 1 + No. 2	1.41-1.92	8.5~6.8	(4.0×4.9)~(2.9×3.6)
110mm f/2.8	No. 1	0.41-0.82	31.9~18.1	(13.8×17.1)~(6.8×8.5)
	No. 2	0.74-1.15	19.6-14.2	(7.6X9.4)-(4.8X6.0)
	No. 1 + No. 2	1.15~1.56	14.3~11.7	(4.9×6.1)~(3.6×4.5)
127mm f/3.8	No. 1	0.35~0.72	44.9-26.8	(15.8×19.6)~(7.8×9.7)
	No. 2	0.65-1.01	28.7-21.7	(8.7×10.8)~(5.6×6.9)
	No. 1 + No. 2	1.00~1.36	21.8~18.4	(5.6×7.0)~(4.1×5.1)

- The subject distance appearing on the Close-up Table refer to the distance from the front rim of the lens to the subject.
- The two rows of figures appearing in the "Magnification," "Subject Distance," and "Area Covered" columns of the table apply to zero and maximum (46mm) extension of the bellows. Figures to the left indicate no extension, figures to the right, maximum extension.

How to Use the Carrying Strap

Attaching the Strap

Hold the metal clamp of the strap so that the key-hole shaped opening faces the Carrying Strap Lug on the camera body. Gently fit the upper part of the key-hole opening over the lug. Next, gently push the bottom of the metal clamp upwards and it will lock in place with a click.

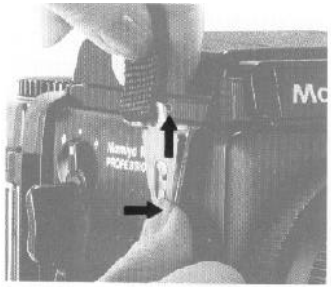

If the clamp is attached to the Hot-Shoe side of the camera upside-down, it will be difficult to remove, so be careful to attach the clamp right-side-up.

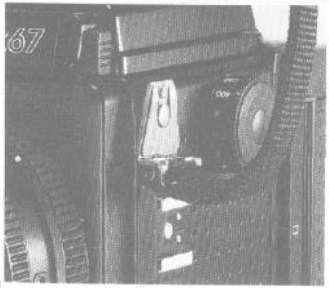

Removing the Strap

Reach behind the strap and while gently squeezing the top of the protruding front plate (leaf spring), slide the clamp downward and off the lug.

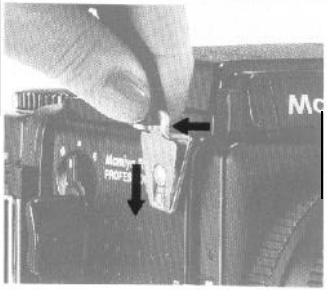

Three Carrying Positions

Depending upon the way the strap is attached to the camera. there are three ways of carrying the camera as shown in the accompanying illustrations. Since the Carrying Strap Lug is not rotary, the carrying strap will not become twisted.

Interchanging Magnifier/ Focusing Hood/Focusing Screen

Magnifier

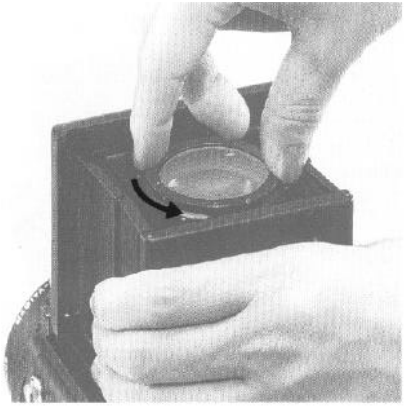

The Magnifier of the Focusing Hood is interchangeable. In addition to the standard (- 1.3 diopter) magnifier, the following diopter lenses are also available: +1, 0, -1, -2, -3.

To remove the Magnifier, gently squeeze the sides of the Focusing Hood, preventing the Magnifier Base Plate from moving, rotate the Magnifier counter-clockwise and remove.

Focusing Hood

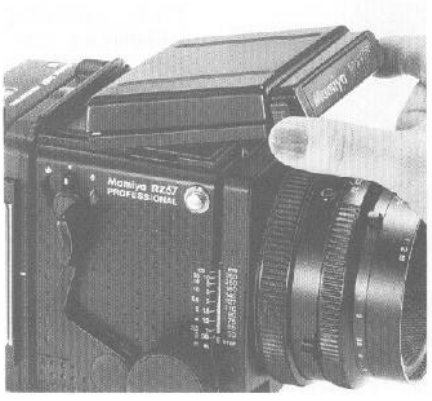

Removing the Focusing Hood

To remove the Focusing Hood, merely squeeze both Focusing Hood Lock Buttons toward each other and lift the hood off the camera.

Attaching the Hood

To attach the hood, slide the Focusing Hood Catches into the groove of the camera body, and while holding in both Focusing Hood Lock Buttons, seat the front of the hood on the camera body. The hood will lock in place after releasing pressure from the Lock Buttons.

Focusing Screens

There are seven instantly interchangeable focusing screens to choose from, each designed for specific applications.

Removing a Focusing Screen

After removing the focusing hood, lift up and remove the screen by grasping the lug on the right-hand side (as viewed from the back of the camera). To replace a screen, gently lower the left-hand side of the screen (as seen from the camera back), followed by the right-hand side, and lightly snap screen into place.

CAUTION

When removing screens, exercise care not to touch the vertical and horizontal format viewfinder mask.

Attaching a Lens with Shutter Released or Mirror Raised

When a lens is removed from the camera body, the mirror is set (lowered) and the lens shutter cocked. Conversely, when attaching a lens, the same conditions should prevail (mirror set and shutter cocked). However, should a lens be attached with either the mirror raised or shutter released, or both, the camera can be reset by following the procedures below.

1. If the mirror is raised (regardless of whether the lens shutter is cocked or released), simply depress the Cocking Lever to reset the camera.
2. If mirror is set and lens shutter released (closed), remove the Dark Slide from Film Holder and depress the Shutter Release Button (film will not be exposed). Next, depress the Cocking Lever to reset the camera.

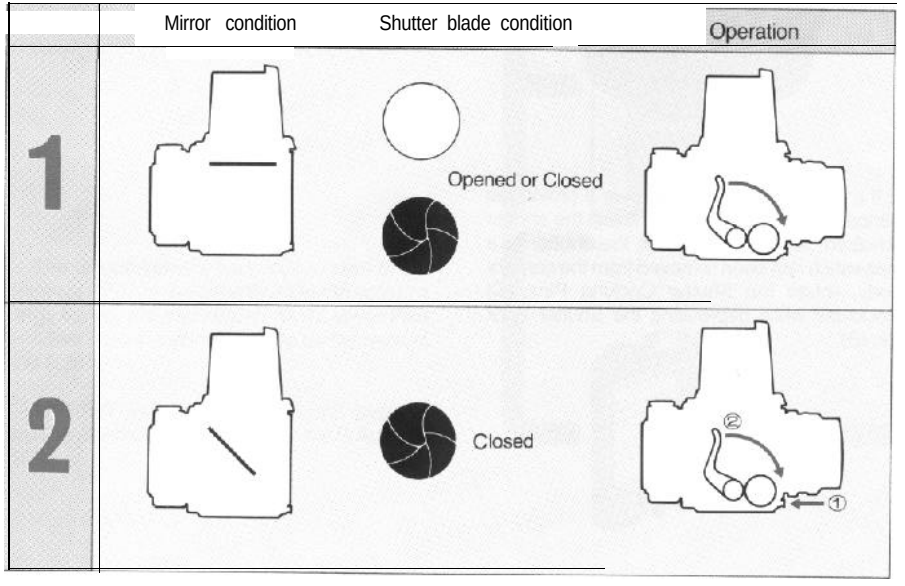

Overriding the Dark Slide Safety Lock

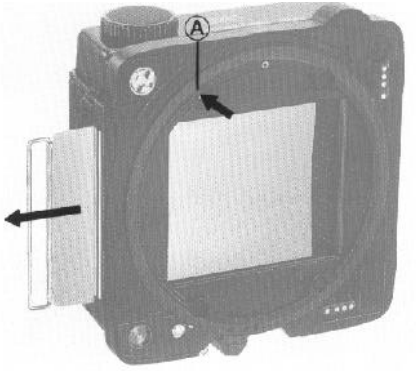

When a Film Holder is removed from the camera body, the Dark Slide automatically locks in place to prevent possible exposure of the film to light. Nevertheless, this safety lock can be overriden if necessary. Simply depress the Dark Slide Release Pin (A) with the tip of a ball point pen or similar object and remove the slide.

Overriding the Shutter Lock Pin

If a lens. is not to be used over a prolonged period, it is desirable to store it with the shutter released. In order to release the shutter of a lens which has been removed from the camera body, rotate the Shutter Cocking Pins (C) clockwise while depressing the Shutter Lock Pin(B).

Camera Back Lock System

120 Roll film holder RZ
220 Roll film holder RZ

Roll film holder for Mamiya RB
(and G-lock system holders)

Polaroid Land pack film holder RZ

G adapter RZ

The unique camera back lock system of the Mamiya RZ67 is designed to allow it to accept a large variety of Film Holders. All RZ series Film Holders mount and lock directly on the back of the RZ67.

All RB67 series holders (G-Lock System) can be attached to the RZ67 via the G Adapter RZ.

• Lenses

1. Focusing

RB67 lenses mount directly onto the RZ67; however, the bellows must be extended 7mm in order to focus the lens at infinity (∞). Therefore, even when photographing distant subjects, be sure to use the Focusing Screen.

CAUTION: Because of the differences in flange back between the two series of lenses, the Distance Scale of the RZ67 body does not apply when using RB67 lenses.

2. Shutter Speed Selection

When a RB67 lens is mounted on the RZ67 body, use the Shutter Speed Ring of the lens for shutter speed selection. The setting of the camera body Shutter Speed Dial is inconsequential.

The shutter is cocked and released in the same manner as RZ series lenses.

• Film Holders

Follow the procedure outlined below in order to use RB series (G-Lock System) holders on the RZ67.

1. Attach G Adapter RZ to the back of the RZ67.

2. Set the R-M Lever of the camera body to "M". If the lever is set to its normal position (the central index mark), the shutter will not release.

3. Advance the film with the Film Advance Lever of the Film Holder.

4. After releasing the shutter, slide the Film Wind-Stop Release Lever of the holder to the left, freeing the film, and advance the film to the next frame.

CAUTION:

★ The Film-Unadvanced Indicator (red bar appearing in the Exposure Counter window) comes into view after the Film Wind-Stop Release Lever is moved.

★ The double exposure prevention mechanism does not operate when a Pro-S Roll Film Holder is used on the RZ67 body, so do not forget to advance the film immediately after releasing the shutter.

● Even if a Dark Slide is not inserted into a Pro-S Roll Film Holder, it can still be removed from an RZ67 camera body. Therefore, when desiring to remove a holder containing a partially exposed roll of film, be sure to first insert the Dark Slide.

★ The Shutter Release Button of the RZ67 will not lock automatically, nor will the viewfinder red warning lamp illuminate if a Dark Slide remains in a Pro-S Roll Film Holder. Consequently, be sure to remove the Dark Slide before beginning a picture-taking session.

•CdS Finders

When using the RB series CdS Finder or CdS Prim Finder on a RZ67 body, be sure the Electrical Contact Cover is in place, for it is used to depress the switch at the base of the finder.

The Lens Speed Scale of either of the above finders does not have provision for a lens faster than f/3.8; therefore, when using the Mamiya-Sekor Z 110mm f/2.8 lens, follow the procedure indicated below.

1. Set the Lens Speed Scale to 3.5.

2. Next, set the Film Speed Dial of the finder to 1/2 the actual film speed. For example, when using 100 ASA (ISO) film, set the dial to 50.

Uniquely designed to prevent errors, the RZ67 incorporates numerous safety features, so if you can not release the shutter, or remove a lens or holder, it is most likely due to user error rather than a camera malfunction. Should something appear to go wrong, be sure to check the following points.

When the shutter can not be released

1. Has the film been completely advanced to the first frame? Have all the exposures already been made (10 with 120, 20 with 220)?
2. Has the Cocking Lever been advanced as far as it will go?
3. Has the Dark Slide been removed?
4. Have you locked the Shutter Release Button and forgotten?
5. Is there a battery in the Battery Chamber'? Is the battery still good?

- In the case of examples 1-3, an orange lamp will illuminate in the viewfinder if an error has been made.

When the lens can not be removed

Have you pressed the Cocking Lever completely forward?

When the Film Holder can not be removed

Have you inserted the Dark Slide into the holder?

Care of the Camera

When not used for a long period of time, remove the battery and any film from the camera. Do not store the camera at temperatures exceeding 40°C or below −10°C. Also avoid storing the camera in a damp or salty area.

As your camera is a precision instrument, avoid exposing it to severe vibrations or shocks. When handholding your camera always use a neck strap and exercise extreme caution when removing a lens or Film Holder.

Prolonged disuse does not lengthen camera life, but shortens it. Thus, when storing a camera for a long time, periodically remove the camera and release the shutter several times to keep the camera in good condition.

Cleaning

Do not touch the lens or mirror surfaces. If a lens needs cleaning, use a blower or lens tissue to remove dust particles. Never use anything other than a blower for the mirror, as its surface should never be touched.

Periodic Check

Periodically check the camera to make sure it is in working order. This is especially important before beginning a photographic session or assignment. Check the battery, flash synchronization, mirror and shutter operation, diaphragm automation, and film advance. Also check any accessories you plan to use.

For a general overhaul, cleaning, or minor repair, take the camera to your nearest authorized Mamiya Service Center or see your camera shop for advice.

Mamiya RZ67 Specifications

Camera Type:	6 x 7cm roll film SLR with lens shutter.
Film Type:	Uses 120 (10 exposure) or 220 (20 exposure) roll film. Actual negative size of 56 x 69.5mm.
Standard Lenses:	Mamiya-Sekor Z 90 mm f/3.5 (6 elements in 6 groups). Mamiya-Sekor Z 110mm f/2.8 (6 elements in 5 groups). Mamiya-Sekor Z 127mm f/3.8 (5 elements in 3 groups).
Lens Mount:	Large diameter (61 mm) bayonet (breech lock) mount with built-in safety lock and 12 electrical contacts. Accepts RB lenses without an adapter.
Shutter:	Seiko #1 electronic shutter; B, T, 8-1/400 sec.; mechanical shutter speed of 1/400 sec. usable without a battery; built-in Shutter Release Button safety lock and manual lock provided.
Focusing Hood:	Opens and closes with a single touch: equipped with 3.2 x Magnifier (interchangeable with 5 other diopter lenses): 95% of the field of view visible; several interchangeable viewfinders available.
Focusing Screen:	All matter with Fresnel lens and instantly interchangeable.
Viewfinder Information:	Orange warning lamp illuminates when Cocking Lever has not been set or properly advanced. Red lamp illuminates when Dark Slide has not been withdrawn; also doubles as battery check lamp. Green lamp illuminates when Mamiyalite electronic flash unit is fully charged.
Revolving Back:	Back revolves 9O" to change from horizontal to vertical format, or vice versa. Viewfinder format automatically changes as back revolves.
Focusing Method:	Rack and pinion focusing extends built-in bellows up to a maximum of 46mm. Focusing Knob provided with Lock Lever.
Film Transport:	A single 114" stroke of the Cocking Lever advances the film and Exposure Counter, sets the mirror and Light Baffle, and cocks the shutter.
Film Holder:	Interchangeable holders are available for various film types.
Multiple Exposure:	The built-in automatic double exposure prevention mechanism can be overridden with a single touch of a lever, providing multiple exposure provision.
Battery Type:	One 6V silver-oxide battery (4SR44) or 6V alkaline battery (4LR44).
Additional:	Camera has remote control capability and mirror-up capability (for vibrationless photography).
Dimensions:	(with 110mm f/2.8 lens) 104mm (width) x 133.5mm (height) x 211.5mm (length).
Weight:	2.4 kg with 110mm f/2.8 lens.

. Specifications and appearance are subject to change without notice.