Bayer Polymers

A processing guide for

THERMOFORMING

BAYER THERMOPLASTICS

MAKROLON® POLYCARBONATE
LUSTRAN® ABS
CENTREX® ASA, AES and ASA/AES WEATHERABLE POLYMERS
BAYBLEND® PC/ABS BLEND
TEXIN® TPU
CADON® SMA
MAKROBLEND® PC BLEND
TRIAX® PA/ABS BLEND

TABLE OF CONTENTS

INTRODUCTION

7 The Background of Thermoforming
7 The Advantages of Thermoforming
8 The Advantages of Thermoforming with Bayer Thermoplastics
8 Product Choice
8 Bayer Expertise

THE THERMOFORMING PROCESS: AN OVERVIEW

12 The Forming Cycle
13 Methods of Thermoforming
13 Post-Forming

MOLD DESIGN

14 Mold Types
14 Male and Female Molds
14 Matched Molds
14 Multiple-Mold Layout
15 Mold Materials
15 Plaster
15 Wood
15 Plastic
16 Aluminum
16 Sprayed Metal
16 Electroformed Metal
16 Steel
16 Mold Design Considerations
16 Radii, Drafts, and Undercuts
17 Vacuum Holes
17 Plug and Ring Assists

PART DESIGN

19 Depth of Draw
19 Reproducing Detail
19 Ribbing
20 Fillets
20 Stress Concentration
20 Shrinkage
21 Mold Shrinkage
21 After-Mold Shrinkage
21 In-Service Shrinkage and Expansion
21 Undercuts
22 Inserts
22 Part Layout

THERMOFORMING EQUIPMENT

23 Sheet Drying Equipment
24 Thermoformer Ovens
25 Mold Temperature Control
26 Vacuum and Pressure Requirements
26 Sheet Clamping and Transfer Equipment
27 Sheet-Fed Thermoformers
27 Single-Station Thermoformers
28 Shuttle Thermoformer
29 Rotary Thermoformer
30 Continuous Thermoformers
30 Straight-Line, Roll-Fed Thermoformer
30 Drum or Ferris Wheel Thermoformer
31 In-Line Thermoformer

TABLE OF CONTENTS, *continued*

FEEDSTOCK

32 Sheet Gauge Uniformity
32 Orientation (Internal Strain)
33 Toughness
33 Moisture Content and Contamination

MATERIAL PRE-DRYING AND PRE-HEATING

34 Material Pre-Drying
35 Material Pre-Heating

SINGLE-STEP FORMING TECHNIQUES

37 Drape Forming with a Male Mold
37 Drape Forming with a Female Mold (Straight Vacuum Forming)
38 Pressure Forming
38 Free Forming
39 Matched-Mold Forming
39 Trapped-Sheet Pressure Forming
40 Twin-Sheet Forming

MULTIPLE-STEP FORMING TECHNIQUES

41 Plug-Assisted Vacuum Forming
42 Plug-Assisted Pressure Forming
42 Slip-Ring Forming
42 Vacuum Snap-Back Forming
42 Billow Snap-Back Forming

COOLING AND PART REMOVAL

44 Part Cooling
44 Part Removal

POST-FORMING

45 Trimming, Cutting, and Finishing
45 Joining
46 Mechanical Fastening
46 Press and Snap Fits
46 Solvent Bonding
46 Adhesive Bonding
47 Ultrasonic Bonding
47 Printing and Decorating
47 Printing
47 Labeling
47 Painting
47 Metallizing

TROUBLESHOOTING GUIDE

48 Voids or Bubbles in Formed Parts
48 Crazed or Brittle Parts
49 Warped Parts
49 Texture Washout and Excess Gloss
50 Non-Uniform Drape
50 Incomplete Forming of Part, Poor Detail
51 Scorched Sheet
51 Poor Surface Finish
52 Blushing or Loss of Color
53 Chill Marks or Mark-Off
53 Nipples on Mold Side of Formed Part
54 Webbing, Bridging, or Wrinkling
55 Insufficient Draw-Down
55 Poor Wall Thickness Distribution and Excessive Thinning in Some Areas
56 Shrink Marks
56 Shiny Streaks on Part
56 Excessive Shrinkage or Distortion of Part After Removing from Mold

57 Corners Too Thin in Deep Draw
57 Difficult Part Removal
58 Loss of Vacuum Seal
58 Sheet Sticking to Plug
58 Tearing of Sheet During Forming
59 Cracking of Part During Service
59 Whitening of Sheet
59 Poor Embossing Detail
59 Excessive Sheet Sag
59 Varying Sag Levels Among Sheets
59 Non-Uniform Billow

SAFETY CONSIDERATIONS
60 General
60 Health and Safety Precautions

GENERAL INFORMATION
61 Regulatory Compliance
61 Regrind Usage
61 Medical Grade Information
61 Sterilization Information
62 Technical Support

APPENDIX A
63 Glossary

APPENDIX B
67 Process Temperature Guide for Thermoforming Bayer Thermoplastics

APPENDIX C
68 List of Tables

APPENDIX D
69 List of Figures

INDEX
70 Index

INTRODUCTION

This guide has been designed specifically for the experienced thermoformer who wishes to achieve consistent, highly marketable results with sheet extruded from Bayer thermoplastic resins. This information will add to your thermoforming expertise and help you produce finished products of the highest quality.

THE BACKGROUND OF THERMOFORMING

Thermoforming is one of the oldest plastic molding techniques, with a history dating well back into the 19th century. It is a distinctly American contribution to the industry. Most other methods of processing plastic originated in Europe.

For many years, the thermoforming industry was relatively small because it lacked suitable sheet materials and forming equipment capable of production operations. Thus, early forming techniques emphasized injection and compression molding.

Around 1920, cellulosic sheet materials, followed later by acrylic and vinyls, sparked the growth of the thermoforming industry. The emergence of thermoforming as a major thermoplastic fabrication process began to accelerate in the early 1950s when the dairy industry began to use containers and lids formed from high-impact polystyrene for packaging cottage cheese, sour cream, yogurt, and other dairy foods. Thermoforming continued to gain strength with the manufacture of signs and displays, toys, and other packaging applications.

Over the past two decades, thermoforming has become an increasingly important method of plastic sheet processing. Sheet made of Bayer resins has the dimensional stability and the impact strength required for today's demanding applications.

THE ADVANTAGES OF THERMOFORMING

As a method of molding plastics, thermoforming offers important commercial advantages. For many large applications involving limited production runs, injection molding is not feasible due to prohibitive tooling costs or equipment limitations, making thermoforming the only method that is economical or practical. Suitable thermoforming equipment is usually available at moderate cost, and thermoforming molds are usually much less expensive than injection molds. In addition, very-thin-walled items that are often difficult or impossible to produce by injection molding can be easily produced by thermoforming.

Figure 1 **Early Application of Plastic Thermoforming**

The use of thermoformed containers by the dairy industry marked the emergence of thermoforming as a major thermoplastic fabrication process.

Thermoforming is not without its limitations, however. It usually cannot achieve extremely accurate wall or part dimensions. Thus, injection molding is the preferred method when close tolerances are required. If material cost is critical, thermoforming may not be practical because extruded sheet is somewhat more expensive than raw resin. Also, there is usually a considerable amount of trim scrap from the thermoformed part that must be reprocessed or discarded.

Table 1 provides and overview of the advantages and limitations of thermoforming.

THE ADVANTAGES OF THERMOFORMING WITH BAYER THERMOPLASTICS

Product Choice

A number of Bayer engineering thermoplastic resins can be converted to sheet for thermoforming. The selection ranges from polycarbonate — which offers the thermoformer the advantages of glass-like transparency combined with remarkable thermal resistance, high impact strength, and low-temperature toughness — to polycarbonate/polyester and polycarbonate/ABS blends. Bayer ABS resins offer an optimum cost-performance balance, while ABS/SMA terpolymers are available which extend ABS performance to meet higher heat resistance requirements. Weatherable polymers are available for outdoor use. Thermoplastic polyurethanes bridge the gap between plastics and rubber, and ABS/polyamide blends offer processing characteristics similar to ABS with finished parts having a nylon-rich surface for improved chemical and abrasion resistance.

A list of Bayer thermoplastics available for thermoforming and their basic characteristics is provided in Table 2.

Bayer Expertise

Bayer Polymers is a world leader in polymer chemistry, production, and process experience. We are ready to help thermoformers determine which Bayer thermoplastic is best-suited for your application, and assist you with production trials, physical testing, advice on forming and secondary operations, and on-the-spot technical assistance to help ensure product quality.

For more information, contact your Bayer representative or call Bayer Polymers at 1-800-662-2927.

Figure 2 **Thermoformed Plastic Sheet in a Modern High-Performance Application**

The automobile industry has taken advantage of the production efficiency, appearance, light weight, and performance of thermoformed engineering thermoplastics for many OEM and after-market products like this tonneau cover.

Table 1 **Advantages and Limitations of Thermoforming**

Advantages	• Production parts can be run on relatively inexpensive aluminum or epoxy molds. • The maximum mold pressure for vacuum forming is under 15 psi. Mold pressures for pressure forming can range from 30 to 300 psi and requires tooling accordingly. • Prototype parts can normally be run on wood molds, with as many as 50 pieces being formed before the wood shows serious deterioration. • Lead time from concept to production can be shorter. • Coextruded or laminated sheet, or both, with up to five different types of plastic in up to nine layers, can provide the thermoformer nearly any properties or characteristics desired in a sheet. • Properly molded parts exhibit no excessive molded-in stress. • With pressure forming, detail very close to injection molding and much faster cycle times can be achieved. • Very large, relatively simple parts can be molded. Sizes up to 4 by 8 ft (1 by 2.5 m) are common. • The cost of thermoforming equipment is low compared to other processes, though sophisticated in-line forming and trimming equipment does cost more than basic thermoforming equipment. • Packaging can be thermoformed to thinner gauges than is possible with other processes. • Parts can be molded, filled, decorated, and capped or sealed in one continuous operation. • Multi-cavity molds on high-speed machines can produce quantities approaching 100,000 pieces per hour. • Part design changes can be less costly due to less expensive tooling.
Limitations	• Details can be molded only on one side of the part without special matched tooling. • Precise wall thicknesses are difficult to achieve and cannot be effectively varied within the part. • Wall thickness and part dimensions can vary from part to part. • Labor costs are higher with thermoforming compared to other processes because of trimming and detailing. • Material costs are higher because thermoforming requires extruded sheet or film, where as injection molding or extrusion can be accomplished directly with raw resins. • As much as 70% to 80% of the material is trimmed from finished thermoformed parts, with 25% to 30% common, making trim reclamation crucial.

Table 2 **Bayer Thermoplastics Available for Thermoforming**

Product	Features	Markets and Applications
Makrolon® Polycarbonate	• Glass-like transparency. • Outstanding impact strength. • Good thermal resistance. • Excellent dimensional stability. • Good electrical properties.	• Automotive and transportation: lighting components, instrument panels, aircraft canopies. • Business machines: computer and printer housings. • Consumer: power tool housings, food storage containers, appliances, sporting goods. • Electrical/electronic: electric meter covers; lighting diffusers and lenses.
Bayblend® Polycarbonate/ABS Blend	• Good impact resistance at low and high temperatures. • Rigidity and dimensional stability. • Good color stability in indoor lighting. • Good thermal stability.	• Automotive: interior and exterior parts, wheel covers, instrument panels. • Business machines: computer, monitor, and printer housings; general office equipment. • Consumer: small appliance components and housings; smoke detectors; lawn and garden equipment.
Makroblend® Polycarbonate/ Polyester Blend	• Good chemical resistance. • Excellent low-temperature impact resistance. • Good abrasion resistance. • Good processibility and thermal stability. • Rigidity and dimensional stability.	• Automotive: body panels, bumpers, exterior mirror housings. • Consumer: appliances, food trays, household cleaning equipment, lawn and garden equipment. • Electrical/electronic: electrical housings, switch housings. • Industrial/mechanical: meter housings, pump housings, agricultural equipment.
Triax® Polyamide/ABS Blend	• High impact strength. • Excellent abrasion resistance. • Good chemical resistance and fatigue performance. • Heat resistance that exceeds standard ABS.	• Automotive: interior functional components, housings, and shrouds. • Consumer: appliances, lawn and garden equipment, power tools, and sporting goods.

Product	Features	Markets and Applications
Lustran® ABS	• Toughness, strength, and rigidity. • Heat and chemical resistance. • Dimensional stability and creep resistance. • Good surface appearance.	• Automotive: interior and exterior trim, consoles, scuff plates, and map pockets. • Business machines: computer housings and bezels. • Consumer: housewares, coolers, small appliance housings, floor care components, lawn and garden appliances, power tool housings, toys, telecommunications equipment, consumer electronics, shower surrounds, vanity parts. • Medical: diagnostic equipment housings, test kits. • Specialty transportation: interior parts for recreational vehicles and campers.
Cadon® SMA	• High heat resistance. • Impact strength. • Rigidity. • Good chemical resistance.	• Automotive: interior and exterior trim, instrument panels. • Consumer: appliances, power tools.
Centrex® ASA, AES, and ASA/AES Weatherable Polymers (Usually coextruded with ABS for outdoor protection.)	• Toughness and durability. • Resistance to fading and cracking from sunlight and temperature extremes. • Resistance to road chemicals. • Light weight.	• Automotive: interior trim; exterior and aftermarket parts. • Consumer: lawn and garden tractor components; boat and marine accessory parts; spa shells; swimming pool steps, covers, and filter housings. • Miscellaneous: outdoor signs. • Specialty transportation: recreational vehicle exterior parts; truck caps.
Texin® TPU (Usually coextruded or laminated onto ABS for abrasion resistance, soft feel, or weatherability.)	• Excellent abrasion resistance. • Excellent resistance to fuels and oils. • High tensile and tear strength. • High elasticity and resilience. • Good vibration dampening.	• Automotive: exterior applications, side body molding, interior panels, covers, dashboards.

In general, the thermoforming process involves forcing heated plastic sheet against a mold to produce the desired shape. The force is supplied by one of three methods: (1) pneumatically, with the application of a vacuum or compressed air; (2) mechanically, with tools, plugs, or matched molds; or (3) a combination of both. As the thermoplastic cools, it retains the detail of the mold which formed it.

THE FORMING CYCLE

The forming cycle in the thermoforming process begins by sealing the clamped, preheated sheet to the mold. If pre-stretching is required, it is accomplished with a partial vacuum, air pressure, or plug assist. Then, while the sheet is still within the proper forming temperature range, vacuum or air pressure is applied to form the sheet onto or into the mold, or matching male and female molds come together to form the sheet. The sheet is held fast to the mold while the part cools. After the part has sufficiently cooled, it is removed from the mold, either manually or with automatic ejection systems, for post-forming work. The process is then repeated for the next sheet.

Figure 3 **The Thermoforming Process**

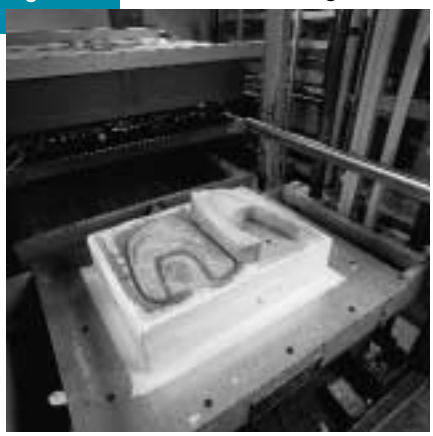

1. The plastic sheet to be thermoformed is first clamped into a frame and heated to a temperature at which it becomes malleable.

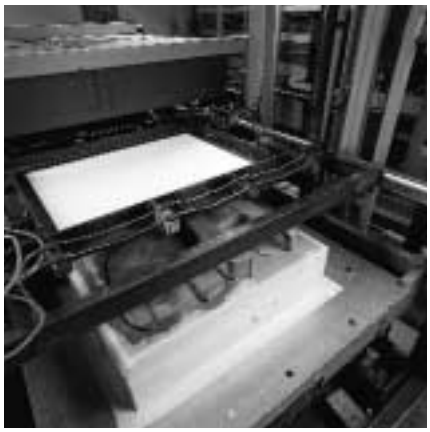

2. The clamped, preheated plastic sheet is sealed to the mold.

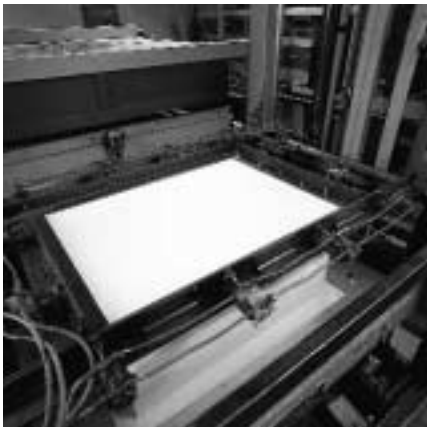

3. A vacuum is applied to draw the sheet down over the male mold.

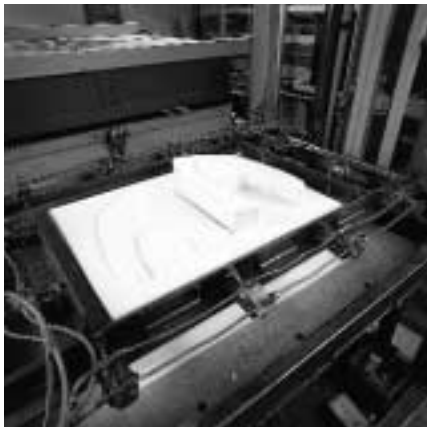

4. The sheet is held fast to the mold while the part cools.

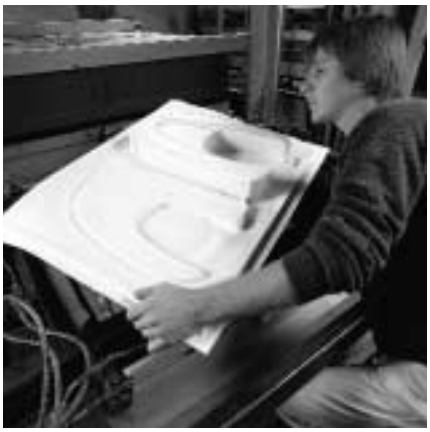

5. After the part has sufficiently cooled, it is removed from the mold either manually, as shown here, or with automatic ejection systems.

METHODS OF THERMOFORMING

The thermoforming process can use single-step or multiple-step methods. Single-step thermoforming forms the heated sheet in one operation. Multiple-step thermoforming involves pre-stretching the heated sheet to help ensure an even distribution of material in the finished part. Table 3 lists the single- and multiple-step thermoforming methods covered in this publication.

With one exception, these methods involve drawing the heated sheet over a male mold or drawing the heated sheet into a female mold. The one exception is "free-forming" or "free-blowing," whereby the heated sheet is blown into the desired shape without contacting a mold. Free-blowing is used with polycarbonate sheet for parts requiring high optical quality, such as skylights and aircraft windshields, which could be affected by mold contact.

Table 3 **Thermoforming Techniques**

Single-Step Thermoforming	• Drape forming (male mold vacuum forming). • Drape forming with a female mold (straight vacuum forming). • Pressure forming. • Free forming. • Matched-mold forming. • Trapped-sheet pressure forming. • Twin-sheet pressure forming.
Multiple-Step Thermoforming	• Plug-assisted vacuum forming. • Plug-assisted pressure forming. • Vacuum snap-back forming. • Slip-ring forming.

POST-FORMING

After the thermoformed sheet has been removed from the clamping frame, the part undergoes post-forming steps to bring the part into its final configuration. Waste or scrap around the edges is trimmed and holes are cut. Finishing often includes filing or sanding rough edges left behind by trimming and cutting tools, and polishing to remove scratches. Thin packaging lids and trays are easily trimmed using standard techniques.

Thermoformed parts may be joined in a variety of methods to create complex products. Printing and decorating can be accomplished using the techniques common to thermoplastics.

Molds are the single most important factor in the success of a thermoforming operation. Poorly designed molds made of the wrong materials can hinder the best equipment and operators. Therefore, it is very important to consider these factors before building a mold: the type of mold which will best produce the part, the material best-suited for the quantity and part to be produced, the design of the part, and possible use of plugs and ring assists.

MOLD TYPES

Male and Female Molds

A male mold has one or more protrusions over which the heated sheet is drawn to form a shape, whereas a female mold has one or more cavities into which the heated sheet is drawn to form a shape. The wall thickness of the thermoformed part is affected by whether it is formed on a male or female mold. The wall thickness of parts thermoformed on male molds is greater at the top of the part, while the wall thickness of parts thermoformed in female molds is greater around the flange.

Male molds are preferred to female molds where deep uniform draws are required and the sheet is not pre-stretched. The depth-to-diameter draw ratio can be up to 3:1. Female molds are usually limited to a depth-to-diameter draw ratio of 2:1 unless the sheet is pre-stretched in a multiple-step method. With pre-stretching and plug assists, female molds can achieve very uniform deep draws with draw ratios of 5:1 or higher.

Matched Molds

Matched molds consist of both a male and female die. Heated sheet is either clamped over the female die ("mold cavity") or draped over the male die ("mold face"), and the sheet is formed to shape as the two dies close together. Matched-mold forming can provide excellent reproduction of mold detail, including lettering and grained surfaces, while maintaining excellent dimensional accuracy.

Multiple-Mold Layout

Some molds can form several parts in one cycle. This multiple-mold layout greatly increases output while decreasing trim scrap. (See Figure 4.) The spacing between multiple male molds should be equal to 1.75 times the mold height. Webbing (bridging between the high points of molds) can occur if the spacing is insufficient. In some cases, rod or ring assists can permit closer mold spacing (see "Plug and Ring Assists," page 17). Female molds can be spaced together as close as the part design will permit. If plug assists are used, however, the spacing for the cavities should be the same as with multiple male molds.

Figure 4 **Multiple-Mold Layout**

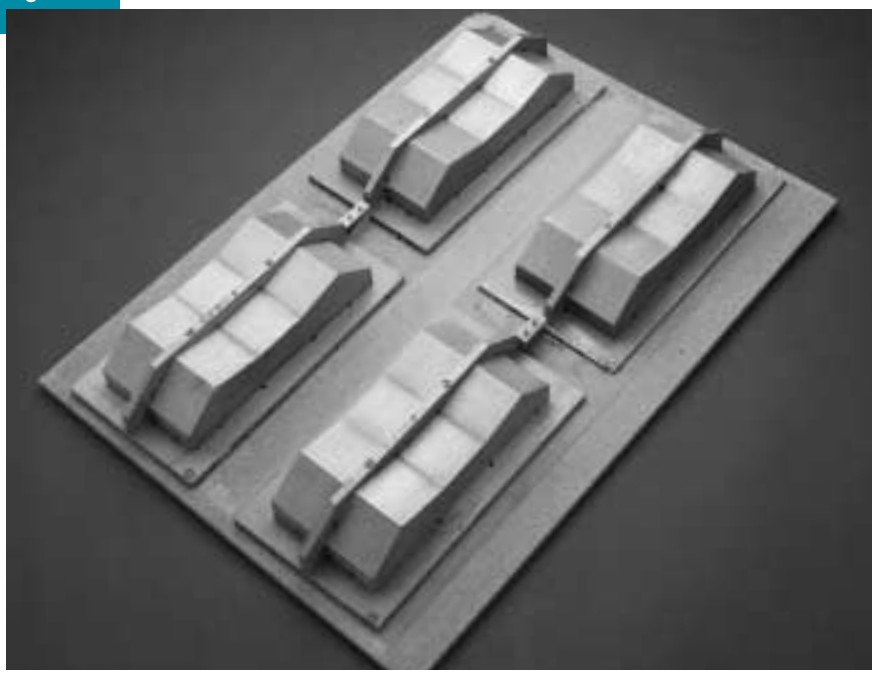

MOLD MATERIALS

Various kinds of materials have been used successfully in making molds for vacuum forming. For prototyping, experimental thermoforming, or short runs, wood and plaster are the most commonly used materials. Cast phenolic and epoxy resin molds can work satisfactorily for short and medium runs. Long production runs, however, usually require a metal mold.

Following is a brief description of the properties and characteristics of various thermoforming mold materials.

Plaster

Plaster molds are cast directly from the model and used for prototyping or very limited production. They are not desirable for large-volume production because of their many drawbacks — poor durability, poor heat conductivity, and the inability to control temperature. The primary advantages of plaster as a mold material are (1) it is low in cost, (2) it is easily shaped, and (3) it sets at room temperature and does not require extensive heating apparatus to set up as with thermoset resins. A high-temperature varnish improves the surface finish and wear resistance of plaster molds.

Wood

Wood molds are somewhat more durable than plaster but have many of the same limitations. They are best fabricated from kiln-dried, close-grain hardwood, glued with a thermosetting glue, and sealed with a paste filler. The grain of joined sections should run parallel, since wood has different shrinkage rates across the grain versus with the grain. For an improved surface finish and wear resistance, wood molds can be coated with an epoxy resin, then sanded, buffed, and polished. Coating the entire mold with epoxy will improve stability by preventing the absorption of moisture by the wood. An example of a wood mold is shown in Figure 5.

Figure 5 **Wood and Aluminum Molds**

Plastic

Molds made from cast phenolic, cast filled epoxy, and furan resins exhibit excellent dimensional stability, good abrasion resistance, and a smooth, nonporous surface. Metal-filled epoxy molds in particular tend to be durable and can be moderately heated for better surface reproduction. Plastic molds can be patched and repaired when necessary at very little expense. For added strength, the bottom of a cast

plastic mold may be reinforced with resin-impregnated fiberglass. Plastic molds are not good heat conductors and, therefore, cannot be used where the sheet must be rapidly cooled for fast cycles.

Aluminum

Aluminum molds can be made in two basic ways. They can be fabricated from aluminum plate stock and machined to proper dimensions and finishes. They can also be made by casting the aluminum, then machining and finishing. The surface can be textured or finished to a high polish. Aluminum is an excellent heat conductor and permits rapid heating and cooling for fast cycles. An example of an aluminum mold is shown in Figure 5, page 15.

Sprayed Metal

The mold itself consists of a sprayed metal shell reinforced with resin-impregnated backing for rigidity. For all practical purposes, sprayed metal molds are permanent. Sprayed metal molds of aluminum, copper, nickel, low-carbon steel, tin, or zinc can make as many as 500,000 pieces with no evidence of mold deterioration. Detail such as the texture of cloth or fiber can be accurately reproduced with sprayed-metal molds.

Electroformed Metal

These permanent molds are produced by building up layers of copper, nickel, and chromium into a shell. Precise mold detail and an exceptional surface finish can be achieved with this controlled plating technique. The shell is usually backed with zinc or other similar, low-temperature, non-ferrous alloys for rigidity and durability.

Steel

For simple shapes, molds can be machined from standard steel stock. Steel molds are both durable and easy to plate, but are generally more expensive to fabricate.

MOLD DESIGN CONSIDERATIONS

Mold design involves several key factors, including radii, drafts, undercuts, and vacuum holes. Proper mold design is an important aspect in thermoforming. The design of the mold is often dictated by the thermoforming machine, the thermoforming method, and the formed part. For example, the size of the thermoformer platen can affect the spacing of multiple molds and mold orientation.

CAUTION: Molds of inadequate design may explode when subjected to the force of pressure molding. Therefore, when designing a mold for pressure forming, give careful consideration to the magnitude of force the mold must withstand. Because the mold itself becomes a pressure vessel, it must be of stiff, rigid construction and fabricated of appropriate materials.

Radii, Drafts, and Undercuts

In order to form sheet properly, all radii should be at least equal to the wall thickness. The larger the radius, the more rapidly the forming can take place at lower sheet temperatures. Larger radii also prevent excessive thinning of the sheet in part corners. Molds should have drafts of at least 3˚ to 4˚ and a surface finish of less than

Table 4 **Recommended Vacuum Hole Diameters for Lustran ABS Sheet**

Sheet Thickness in. (mm)	Vacuum Hole Diameter in. (mm)
<0.060 (<1.524)	0.010 (0.254)
0.060 to 0.225 (1.524 to 5.715)	0.030 to 0.045 (0.762 to 1.43)
>0.225 (>5.715)	Up to 0.060 (Up to 1.524)

SPE-SPI #2 (8 µin.) for easy part removal. Avoid undercuts in excess of 0.020 in. (0.51 mm). If undercuts are necessary, design the mold with a collapsible core or a split body.

Vacuum Holes

The location and number of vacuum holes is determined by the geometry of the part and, in turn, strongly influence cycle times. The size of vacuum holes is dependent on the material being thermoformed. For Makrolon® polycarbonate sheet, for example, the vacuum hole diameter should be 0.025 in. (0.65 mm) or less in order to avoid a dimpling effect on the part. For Lustran® ABS sheet, the vacuum hole diameter depends on the gauge of the sheet (see Table 4). Back-drill vacuum holes to a larger diameter to permit faster removal of air. Vacuum slits can also be used. In general, they have less tendency to dimple the plastic surface than do holes of comparable diameter. In fabricating plastic molds, vacuum holes can be cast-in using waxed pins or piano wires that are removed after the material has set.

PLUG AND RING ASSISTS

Plug assists — sometimes called mold assists — are used to pre-stretch the plasticized sheet and to assist in sheet forming. The plug design resembles the shape of the cavity, but is smaller in scale. Plugs should be 10% to 20% smaller in length and width where these dimensions are 5 in. (127 mm) or more. Smaller plugs should allow at least a 0.25-in. (6-mm) clearance between the stretched sheet and the mold. This clearance prevents the sheet from prematurely touching the mold and causing unequal thinning of the material. In addition, the plug should be free of sharp corners which could tear or mark the sheet during forming.

The surface of the plug should be low in thermal conductivity and friction in order for the sheet to stretch evenly. A cotton felt covering is often used to accomplish this. A polyurethane coating works well on wood surfaces, while a Teflon* coating works well on metal. Another method is to blow a thin layer of air between the plug and the sheet.

When the shape of the mold is complicated with narrow grooves, the plug can be designed with ridges corresponding to the mold grooves. These ridges carry more material into the grooves, thereby increasing the thickness of the particular area. For pockets in the mold there can be corresponding projections in the plug. In the case of deep recesses in the mold sidewalls, it may be advantageous to incorporate auxiliary, cam-actuated plugs to carry more material into these areas. All edges should have generous radii.

Figure 6 **Typical Temperature-Controlled Mold Construction**

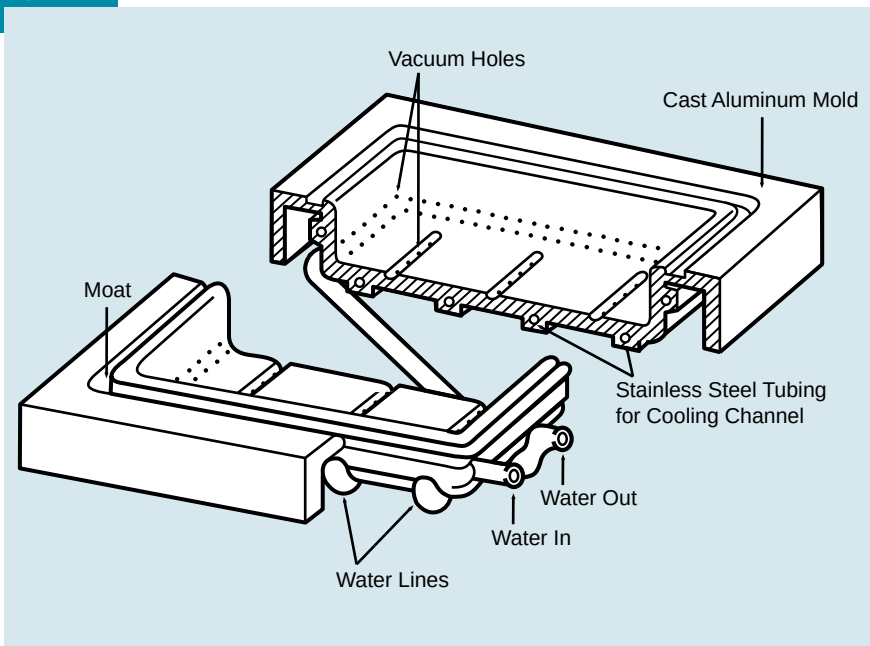

*Teflon is the registered trademark of E.I. DuPont de Nemours.

For best results, make the plug assist with a material that does not significantly cool the hot sheet and can withstand long periods of high temperatures. Aluminum, one of the best materials, and aluminum-filled epoxy work well with cartridge heaters. Temperature control of the plug assist is often necessary to prevent uneven sheet pre-stretching or premature sheet cooling. For most thermoplastics, plug temperatures are usually maintained just below the sheet temperature. For ABS, however, the typical plug temperature is 250˚ to 275˚F (120˚ to 135˚C), while the forming temperature of the sheet may be as high as 475˚F (245˚C). Consult the Process Temperature Guide in Appendix B for plug temperatures recommended for Bayer thermoplastics.

For experimental and short runs, a hardwood plug can be used. The temperature of wood plugs cannot be accurately controlled, however, so performance may be erratic. To help protect the wood from heat-induced drying or splitting, frequent surface lubrication is necessary. Hand-held, felt-covered wood plug assists can sometimes be used to pre-stretch the sheet in areas that have a tendency to thin excessively or not fill out.

Ring assists are used primarily to prevent webbing between multi-cavity male molds. Design them as narrow as possible but without sharp edges. Ring assists require no temperature control because of their limited area of contact.

Figure 7 **Heated Plug Assist**

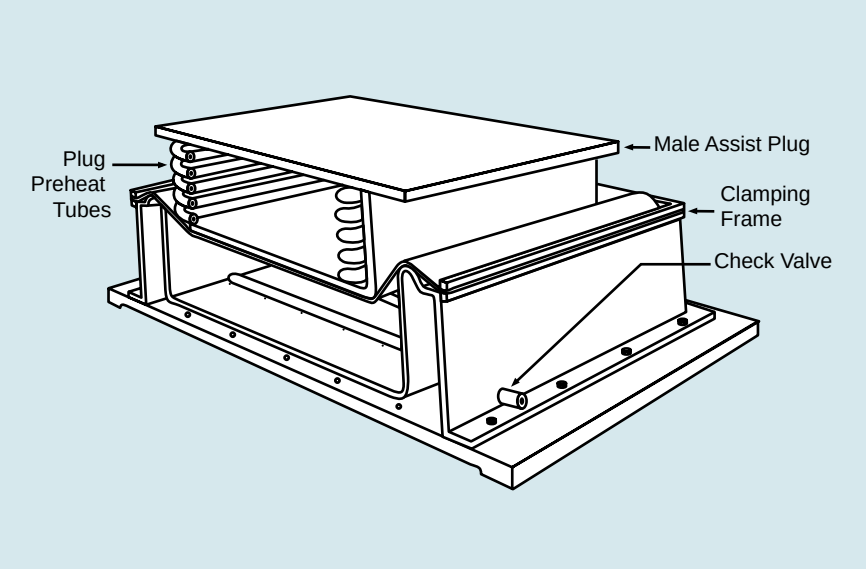

PART DESIGN

Part design is dependent on a variety of parameters which include finished part requirements, equipment capabilities, and material characteristics. The key parameters are listed in Table 5 on page 22.

The design of a part will often determine which thermoforming technique should be used. Some of the more significant part design factors which influence the choice of thermoforming technique follow.

DEPTH OF DRAW

The depth of draw is the ratio of average sheet thickness divided by average part thickness. The depth a thermoplastic material is drawn is important to determining the best thermoforming technique because it is a prime factor controlling the final average thickness of the formed part. For moderately deep draws or depth-to-width ratios of less than 2:1, male drape forming gives a more uniform wall thickness than straight vacuum female forming. For very deep draws or depth-to-width ratios exceeding 2:1, billow pre-draw and plug-assisted female forming is suggested to obtain the most uniform material distribution.

REPRODUCING DETAIL

For reproducing detail in a thermoformed part, equal results can be achieved with both the straight female vacuum and male drape methods. Since the surface of the sheet which is in intimate contact with the mold receives the most detailed impression, the design of the part determines the technique to use, everything else being equal. As a rule of thumb, use the male drape method for “inside” detail, straight female vacuum method for “outside” detail.

It is important to remember that the degree of gloss produced on a smooth surface is dependent on the properties of the plastic material used. It is not usually imparted by the mold surface, though a poor mold surface can mar or detract from the finished surface of the plastic part being formed.

RIBBING

Another important design consideration is ribbing in the formed parts. Ribs can be placed to add rigidity to the part as well as to enhance the looks of the design itself. With proper ribbing, parts can be successfully thermoformed from thin-gauge sheet for a broad range of applications requiring rigidity. This can mean a reduction in material cost as well as heating cycle time. The part shown in Figure 8 is an example of proper ribbing technique.

Figure 8 **Thermoformed Part Designed with Ribbing**

FILLETS

Adequate fillet (or outside corner) radii are essential for maximum strength and serviceability. The radius should be at least equal to the wall thickness of the sheet and never less than 0.031 in. (0.80 mm). An ideal fillet radius would be more than ten times the wall thickness.

Lack of adequate fillets will result in an excessive concentration of mechanical stress. The service life and structural strength of a part may only be 30% of design when the stress concentration factor is high.

STRESS CONCENTRATION

In a structural part having any sort of notch or groove or any abrupt change in cross section, the maximum stress in that region will occur immediately at the notch, groove, or change in section (see Figure 9). It will be higher than the stress calculated on simple assumptions of stress distribution. The ratio of this maximum stress to the nominal stress based on simple stress distribution is the stress concentration factor, *K*, for the particular shape. It is a constant, independent of the material, except for non-isotropic materials such as wood:

$$K = \frac{\text{Stress (Maximum)}}{\text{Stress (Normal)}}$$

Thus it can be shown that the maximum (or actual) stress in a given part under load is greater than the nominal (or calculated) stress by a factor of K. For many simple parts of a flat section without fillets, the value of K may be as high as 3.0 under bending loads.

SHRINKAGE

Shrinkage is a significant factor in thermoforming large precision parts and allowances must be made for it in the design of the part. Shrinkage takes place in three basic forms: mold shrinkage, after-mold shrinkage, and in-service shrinkage and expansion.

Figure 9 Location of Maximum Stress in Notched or Grooved Parts

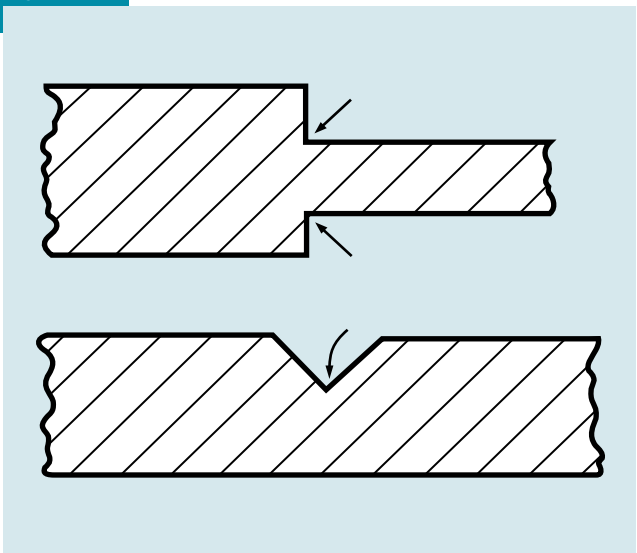

Figure 10 Stress Concentration as a Function of Fillet Radius

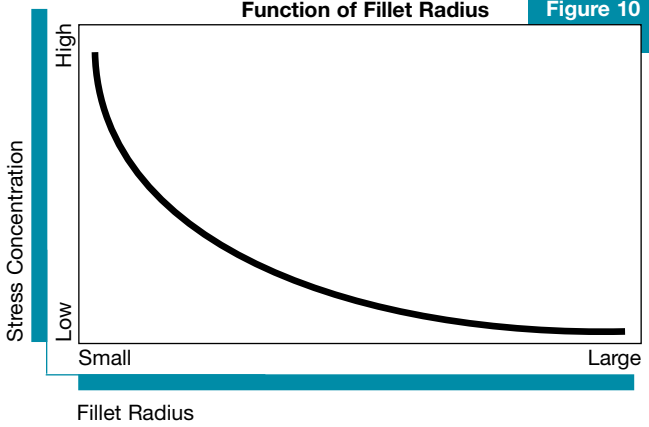

Mold Shrinkage

When a thermoplastic material is heated and formed to a mold, shrinkage of the material occurs during the cooling cycle. The dimensions of the formed part after its surface reaches a temperature at which it can be demolded are slightly less than the dimensions when the part was first formed. This difference is referred to as mold shrinkage. It is usually expressed in terms of inches per inch per ˚F (millimeters per millimeter per ˚C). It varies with processing and design factors as well as with different materials.

Shrinkage is less critical with male drape forming than straight vacuum forming. With male drape forming, the material shrinks onto the rigid mold as it cools, retarding the shrinkage. Conversely, with straight female vacuum forming, the material shrinks away from the mold against the negligible resistance of the outer air with nothing to retard the shrinkage. Although this phenomenon improves final part dimensions, it requires molds with proper draft angles in order to extract the part from the mold.

After-Mold Shrinkage

After demolding, the part will shrink due to heat loss from the part as it cools to room temperature. The part continues to shrink as the hot center or core of the plastic cools. This shrinkage ceases when temperature "equilibrium" is reached in the cooled material.

In-Service Shrinkage and Expansion

This is the normal contraction or expansion of an object caused by changes in temperature and humidity. It is considered a significant factor only where tolerances are extremely critical, or where the formed plastic is rigidly fastened to a material with a markedly different coefficient of expansion. Each type of thermoplastic material has a different coefficient of thermal contraction or expansion. More information on this subject can be found in any of the standard engineering reference books or plastics handbooks, by consulting your local Bayer representative, or by calling Bayer Polymers at 1-800-662-2927. For applications involving precise specifications, you must conduct actual end-use testing.

UNDERCUTS

Undercut sections can be formed using hinged mold sections, cammed sections, and loose pieces in the mold, such as removable split rings. An example of producing an undercut with a removable split ring is shown in Figure 11.

Figure 11 **Removable Split Ring for Thermoforming Undercuts**

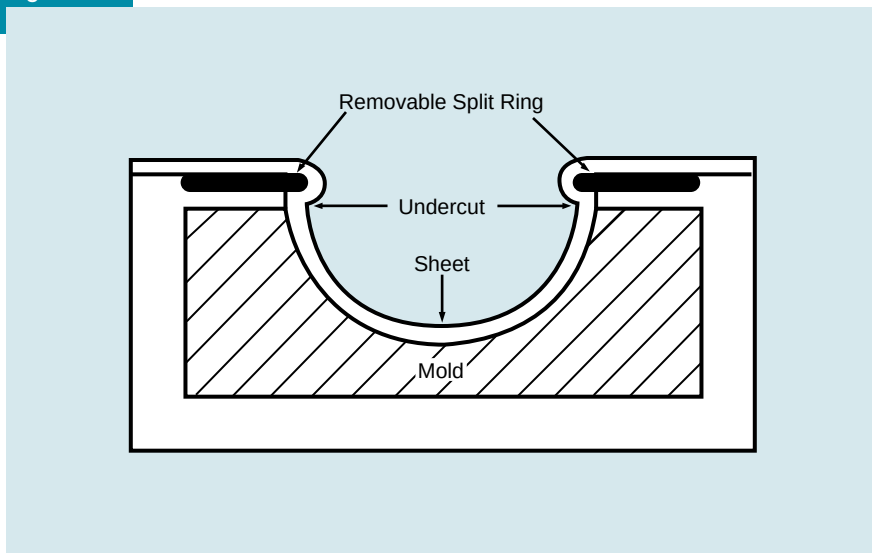

INSERTS

In some designs it is desirable to form an undercut and/or to reinforce the formed unit in a certain section. In such a case, an insert, generally a metal strip or bar, is placed around it. The metal section thus becomes an integral part of the molding. This must be done with great care, however, because the residual stress may cause crazing, cracking, and eventual part failure. Plastic, having a much higher coefficient of thermal expansion than metal, shrinks around the insert and becomes stressed at the interface due to the restriction imposed by the insert.

PART LAYOUT

When forming multiple parts on one mold, the spacing of parts must be sufficient to prevent over-stretching or webbing the sheet among the parts and between the parts and the clamp.

Table 5 **Design Parameters for Thermoforming Parts from Bayer Thermoplastics**

Finished Part Requirements	• Size (length, width, and depth). • Weight. • Thickness or gauge uniformity, overall material distribution, changes in gauge from heavy to thin or vice-versa. • Openings, depth of draw. • Shapes, curves, corner ribs, bosses. • Matching fits, such as paired parts. • Undercuts. • Draft angles. • Surface detail, texture, glossy or matte finish, designs, lettering. • Preprinting. • Optical properties — clarity, translucency, opacity.
Equipment or Process Capabilities	• Size of clamp frames. • Clearance for formed part removal. • Vacuum and/or pressure available. • Heating capacity and pattern control. • Plug force and speed. • Part handling capability.
Resin Characteristics (Thermoforming processibility, not price or end-use applicability.)	• Rheological properties (hot melt strength, extensibility). • Modulus of elasticity and tensile elongation (part handling). • Warping tendencies, coefficient of linear expansion. • Set-up time, deflection temperature under load, chill mark tendencies. • Specific heat and heat transfer coefficient. • Uniformity of material; scrap regrind ratio and quality. • Heat sensitivity. • Dryability of sheet.

THERMOFORMING EQUIPMENT

Equipment employed in the thermoforming process includes:

- Ovens for properly drying the sheet.
- Thermoformer ovens for bringing the sheet quickly, evenly, and consistently to processing temperature, preferably both sides simultaneously.
- A clamping unit, including a means of raising and lowering the mold.
- A vacuum or air pressure system.
- Heating controls for mold and plug assist.
- Timing controls for heating, mold and plug travel, and cooling.
- Trimming and finishing equipment.

Equipment arrangements may be fairly simple, with the oven, the heater, the molding machine itself, and trimming equipment all separate components. Or they may be more elaborate, with roll or sheet stock fed in one end and finished, trimmed parts coming out the other.

SHEET DRYING EQUIPMENT

Properly dried sheet is essential for best results when thermoforming with Bayer thermoplastics. Improperly dried sheet can result in bubbles in the thermoformed part and a reduction in physical properties.

Any circulating air oven able to maintain 250˚F (120˚C) within ±10˚F (±5˚C) should be adequate for drying polycarbonate sheet. The size and capacity of the oven will be determined by the thickness of the sheet and the rate at which it is being used. Forced hot air circulation and baffling to maintain air flow at about 200 ft/min (60 m/min) is desirable to help achieve temperature uniformity.

For ABS and PC/ABS blend sheet, a circulating air oven capable of maintaining a temperature of 180˚ to 200˚F (80˚ to 95˚C) for 2 to 4 hours or 160˚ to 180˚F (70˚ to 80˚C) overnight is required.

It is advisable to hang the sheet vertically or to provide drying racks which allow the heated air to pass between each sheet. (See Figure 12.) Stacking the sheet without racks can result in inadequate drying of the center pieces. Properly designed racks can prevent excessive sheet warpage if the oven overheats.

When thermoforming roll-fed film or thin sheet, the sheet-drying equipment is slightly different. The film web is fed into a drying station, then continues on to the heating and forming stations. This is possible because the thinness of the film permits relatively rapid pre-drying.

Figure 12 **Sheet Drying Oven**

THERMOFORMER OVENS

Thermoformer ovens are used to bring the sheet to the proper forming temperature. Convection ovens using radiant heaters capable of producing a uniform temperature between 1,000˚F (540˚C) and 1,200˚F (650˚C) are preferred. Thermoplastic sheet may be transported through the oven suspended vertically on trolley tracks or supported horizontally in trays lined to protect the surface of the plastic. The oven walls should be insulated, with the entrances and exits shielded from drafts.

There are several radiant heat sources available for heating plastic sheet and film to thermoforming temperature. Low-cost, gas-fired infrared heaters are surface combustion burners in which the gas-air mixture is burned at the surface of either a stainless steel or porous ceramic structure. Electrically powered infrared heaters are available in a wide range of designs, efficiencies, and lifespans. These heater designs include tungsten wire filaments in quartz tubes, tubular rods, small-diameter coiled nichrome wire, and "black body" ceramic or quartz panels. The heating element used depends on the equipment requirements and the thickness of the film or sheet. An example of an electrically powered heating element of a thermoformer oven is shown in Figure 13.

Sandwich-type heater banks are preferred because they help ensure uniform heat throughout the sheet, thus improving the physical properties of the thermoformed part. The distance between the top heater and the thermoplastic sheet should be 3 to 12 in. (75 to 305 mm), while the distance between the thermoplastic sheet and the bottom heater should be 12 to 18 in. (305 to 455 mm). The exact distance is determined by the optimum heating cycle time. Heaters with excessive capacity or which are placed too near the sheet can result in excessive sagging and even ignition. Large sheet can sag 6 in. (150 mm) or more, so the sheet must be kept at least 6 in. (150 mm) away from the heaters to avoid ignition. The sag distance is dependent on the temperature of the sheet, the sag distance at any given temperature is different for each material.

Each bank of heaters should have separate power controllers rather than simple on-off time ratio controllers. Automatic temperature regulators are recommended to minimize temperature fluctuations, and temperature recorders can provide improved supervision. Thermocouple-type limit controls should be present to avoid fires or melting the thermoplastic due to heater control malfunctions. Photoelectric sensors can be used to trigger the thermoforming cycle and prevent the sheet from sagging onto the heating elements.

Figure 13 **Electrically Powered Heating Element of a Thermoformer Oven**

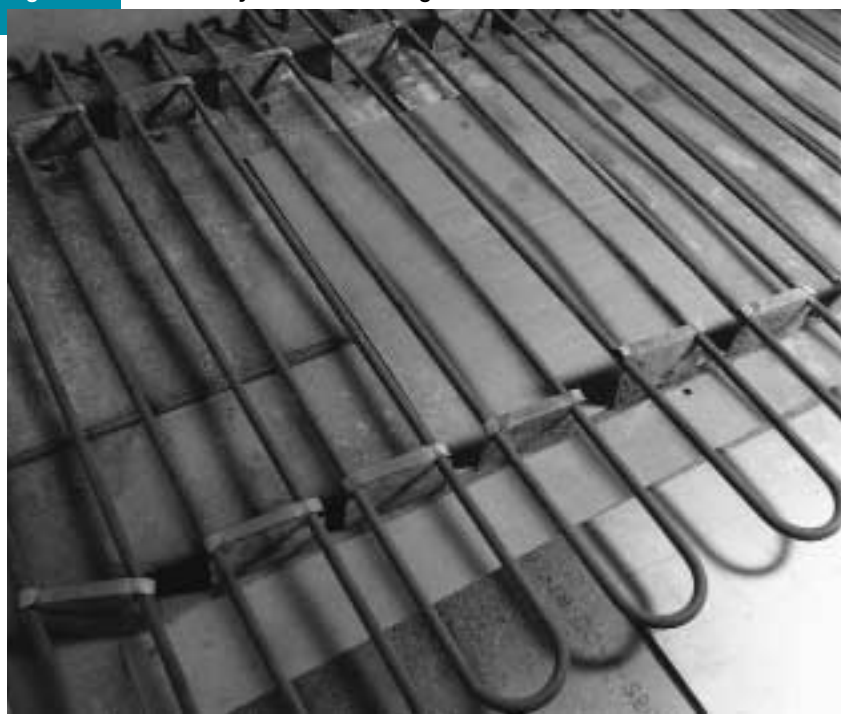

Air currents and drafts in the vicinity of the oven area can cause uneven heating. This can result in uneven wall thickness and poor-quality parts. A guillotine-type, movable shield at the entrance of the oven and a fixed shield at the exit will help control premature convection cooling of the sheet.

MOLD TEMPERATURE CONTROL

Mold temperature fluctuations can result in variations in the size and physical properties of the finished part. For example, the hotter the mold, the greater the final shrinkage of the part. Conversely, the colder the mold, the more molded-in stress in the part.

Figure 14 **Localized Mold Heating**

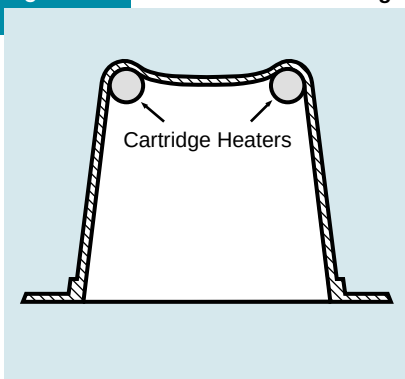

Therefore, mold temperatures must be controlled for high-quality thermoformed parts. How this is accomplished depends on the type of mold.

Prototype and short-run tooling (such as wood molds and mineral or powdered-metal-filled epoxy and polyurethane molds) generally requires radiant preheating. The mold then remains hot during the forming run due to its low thermal conductivity. Production tooling (such as aluminum molds) usually has cast-in tubes or machined channels for the circulation of a temperature-controlled liquid which preheats the mold at the start and then cools the mold as forming rates increase.

Uniform mold temperature — to within 10˚ to 15˚F (5˚ to 10˚C) over its entire surface — is important to prevent variation in part wall thickness. For polycarbonate, for example, mold temperatures can be between 180˚ and 260˚F (80˚ and 125˚C), depending on the surface reproduction and optical clarity required. For ABS, mold temperatures can be between 120˚ and 200˚F (50˚ and 95˚C). Normally, the mold temperature should be just below the demold temperature of the sheet. Consult the Process Temperature Guide in Appendix B for mold and demold temperatures recommended for Bayer thermoplastics.

Localized mold heating is a technique using cartridge-type electrical heaters to achieve more control over material distribution in the part. The higher temperature of the section of the mold where the cartridge heater has been inserted allows the thermoplastic sheet to continue to stretch without cooling or setting up. A typical position for localized heating would be in the half-round radius on the top of the rectangular pan mold in Figure 14. This technique is more effective with metallic than with non-metallic molds because of better thermal conductivity.

For most thermoplastics, maintain plug temperature just below that of the sheet being formed. When thermoforming ABS sheet, maintain the temperature at between 250˚ and 300˚F (120˚ and 150˚C). Lower plug temperatures will work; but the frequency of mark-off, chill marks, and improperly formed parts may increase as the temperature decreases. While not as critical as mold temperature control, plug temperature uniformity should be kept within 10˚F (5˚C).

VACUUM AND PRESSURE REQUIREMENTS

For vacuum forming, consider the volume of air to be removed and the force still available when the part's last dimple is formed. Large parts require evacuation of a large volume of air, and a high, continuous vacuum after the part has been formed to help ensure faster cooling. This cooling provides better dimensional tolerances, and sharper detail. Therefore, the vacuum capabilities of the vacuum thermoforming equipment should comfortably exceed the vacuum required for the largest part to be formed.

Reciprocating piston, diaphragm, sliding vane rotary, and eccentric rotor pumps — all establish a good vacuum but lack the capacity to remove large volumes of air quickly. Therefore, use an air accumulator (surge tank) as a vacuum accumulator. The volume of the surge tank must be 2.5 times the volume of the space around the mold, the vacuum box, and the vacuum lines.

The desirable working vacuum is 12.3 psig (about 25 in. Hg).

For swift delivery of vacuum, locate surge tanks close to the molds. Minimize friction losses in connecting lines by using vacuum hoses having ample ID and by eliminating right-angle lines and diameter changes or restrictions. Where a slow draw is desirable, consider using an in-line, full-flow ball valve.

For pressure forming, use a compressed air supply tank of comparable size to one used for vacuum forming. Pipe connections are not as critical because their effect on pressure drop is less. Install the pressure reducing valve and pressure gauge close to the mold. Locate baffles at the entrance to the mold so that cold air does not blow directly onto the heated sheet. When blowing large billows that must stay hot until the formed part sets, preheat the air.

NOTE: A mold-and-pressure-box used for pressure forming is a potentially dangerous device. This is a pressure vessel and must be designed, constructed, and handled accordingly.

SHEET CLAMPING AND TRANSFER EQUIPMENT

The sheet must be restrained firmly between two frames for the heating, forming, and stripping process. These frames usually consist of angle irons with non-slip gripping surfaces of coarse abrasive cloth, rough rubber pads, or weld spatter. The frames are pressed together by C-clamps, toggle clamps, air-cylinder-operated jaws, or cam- or spring-held devices. The clamping force must be sufficient to prevent the sheet from loosening in the heating oven or when draped over deep molds.

On automatic thermoformers the sheet is securely gripped along the side edges with spring-loaded pin chains in chain rails or gripping discs mounted on the transport chain.

SHEET-FED THERMOFORMERS

Cut-sheet or sheet-fed thermoformers are typically used for material that is 0.030 to 0.500 in. (0.760 to 12.70 mm) thick.

Single-Station Thermoformers

With single-station thermoformers, the clamping, heating, forming, cooling, and unloading steps are done with the sheet in a single, stationary location. Once the sheet is clamped, it remains stationary. The heaters are slid under and/or over the sheet to heat it to forming temperature. After the heaters are removed, the mold and/or plug is mechanically moved into contact with the hot sheet. Then a vacuum and/or pressure are applied to form the part. The part is cooled in place. The mold is retracted and the part is unloaded. (See Figures 15 and 16.)

Figure 15 **Operation of a Single-Station Thermoformer**

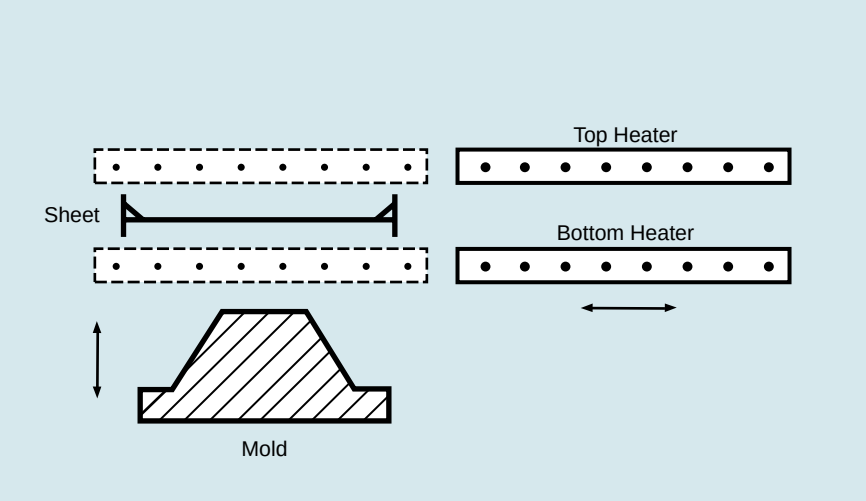

Figure 16 **Single-Station Thermoformer**

Shuttle Thermoformer

With a shuttle thermoformer, the sheet is clamped in a movable frame located to the side of the stationary heaters. The frame containing the clamped sheet is mechanically shuttled (moved) into the heater or heaters. When the sheet reaches forming temperature, it is shuttled (moved) back to the loading station. There the mold is mechanically moved into contact with the hot sheet, and the sheet is formed and cooled. After the mold is retracted the part is unloaded.

There may be two molds, one on either side of the heaters, so that one sheet is heated while the other is formed, cooled, and unloaded. This increases the output over a single-mold thermoformer without the expense of a second set of heaters. (See Figures 17 and 18.)

Figure 17 **Operation of a Shuttle Thermoformer**

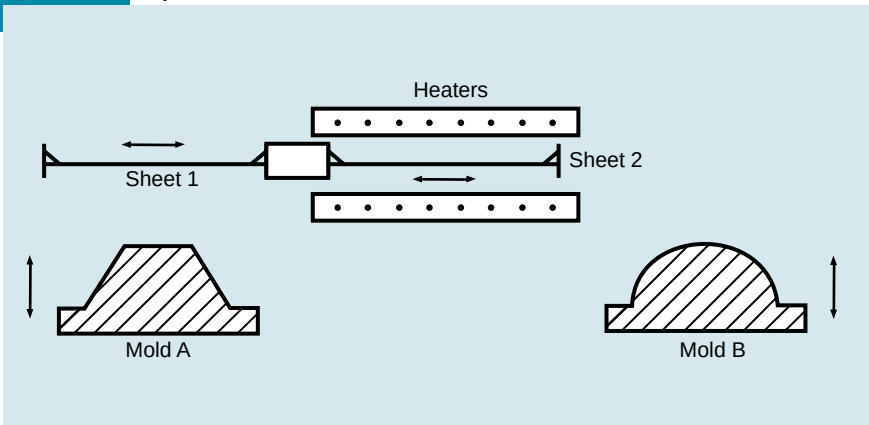

Figure 18 **Shuttle Thermoformer**

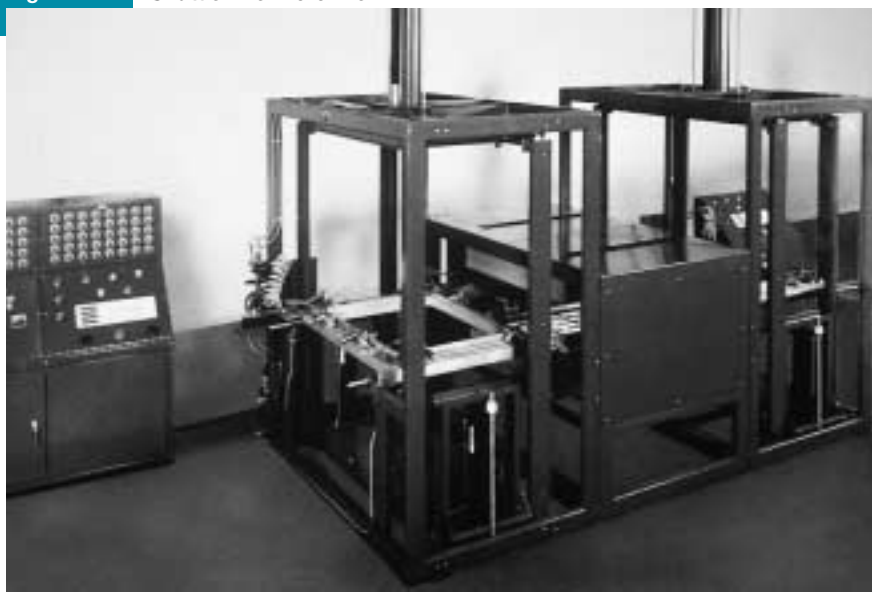

Rotary Thermoformer

Rotary thermoforming is used for applications requiring high production rates. The most commonly used machines are three- and four-station thermoformers. Five-station thermoformers are less common. The more stations a rotary thermoformer has, the higher the production rate and/or the more complicated the part design can be achieved.

Production rates are increased because there are two, three, or four sheets in the forming process at the same time. A three-station rotary thermoformer will have approximately the same output as a shuttle thermoformer with two molds. A rotary thermoformer with two heat stations (a four- or five-station rotary thermoformer) will operate at significantly higher production rates. Generally, the production rate of shuttle thermoformers and three-station rotary thermoformers is limited by the time necessary to heat the sheet to forming temperature. Rotary thermoformers with two heating stations are designed so the sheet is uniformly preheated in the first heating station and subsequently heated to forming temperature in the second heat station. This divides the heating load between two separate sets of heaters. With this process design, two-heat-station thermoformers are usually limited by cooling time rather than heating time. Therefore, the production rate is limited by how long it takes the part to cool after forming and before unloading.

While not commonly used, five-station rotary thermoformers are used for the production of large parts. The fifth station is used for unloading, providing more cooling time.

Trimming is not considered part of the thermoforming equipment. However, there are rotary thermoformers which have integral trimmers to cut off the flange either in the forming station or the unloading station if it is a five-station thermoformer. For three- or four-station machines, it is done in the forming station. The advantages of trimming at the thermoformer are (1) the part is still very warm and easily trimmed, and (2) the parts, especially large ones, are easier to handle with the edge trim removed. (See Figures 19 and 20.)

Figure 19 **Operation of a Rotary Thermoformer**

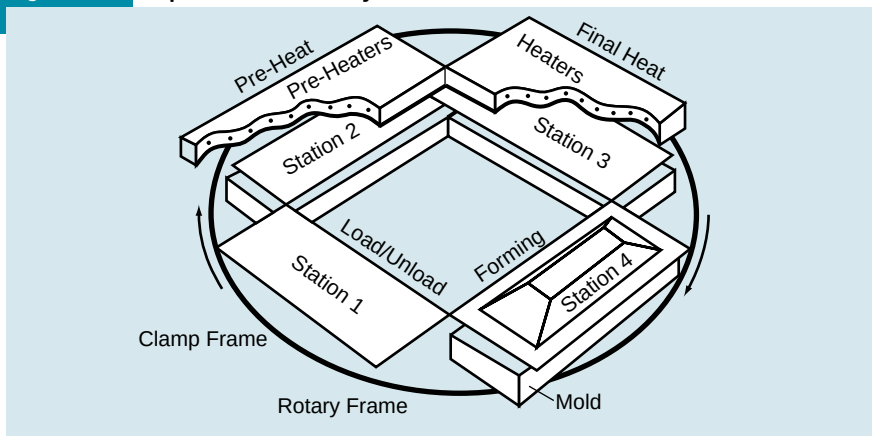

Figure 20 **Rotary Thermoformer**

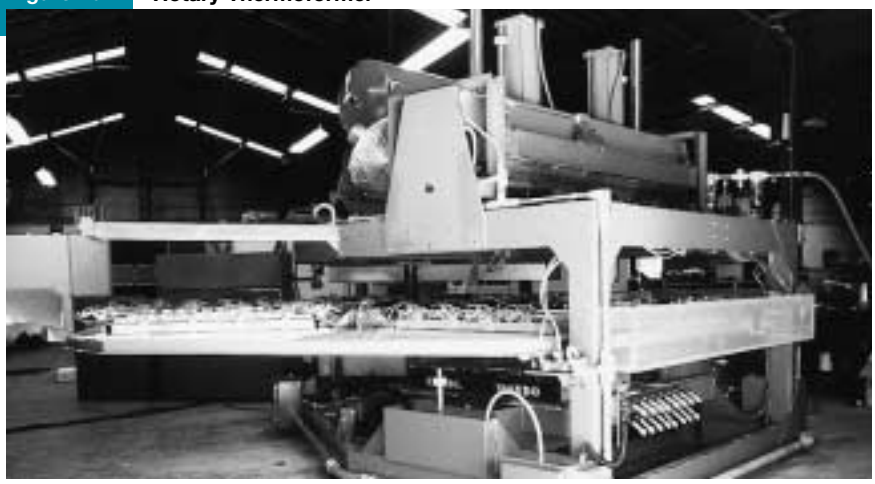

CONTINUOUS THERMOFORMERS

Continuous-type thermoformers are used for sheet usually less than 0.35 in. (8.90 mm) thick. Depending on the type of continuous thermoformer, they may be fed by a web from a roll or directly from an extruder. Continuous thermoformers are ideal for high production runs.

Straight-Line, Roll-Fed Thermoformer

In straight-line roll-fed thermoforming, a continuous web of stock is fed from a roll and clamped into a chain conveyor. The web moves through a heater bank which is usually longer than the subsequent forming station to allow sufficient heating time. The hot sheet continues into the forming station, and then out. Trimming is usually part of the operation and done during cooling. The web is continuously removed from the parts and reground for subsequent extrusion. (See Figure 21.)

Drum or Ferris Wheel Thermoformer

This is similar to straight-line, roll-fed thermoformer, but the web moves onto a wheel which rotates rather than traveling in a straight line. The wheel rotates through the heating, forming, and cooling stations. This type of thermoformer takes up much less floor space than a straight-line thermoformer. (See Figure 22.)

Figure 21 **Operation of a Straight-Line, Roll-Fed Thermoformer**

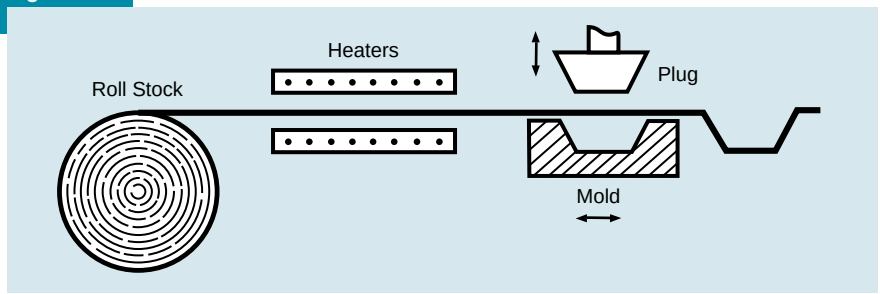

Figure 22 **Operation of a Drum or Ferris Wheel Thermoformer**

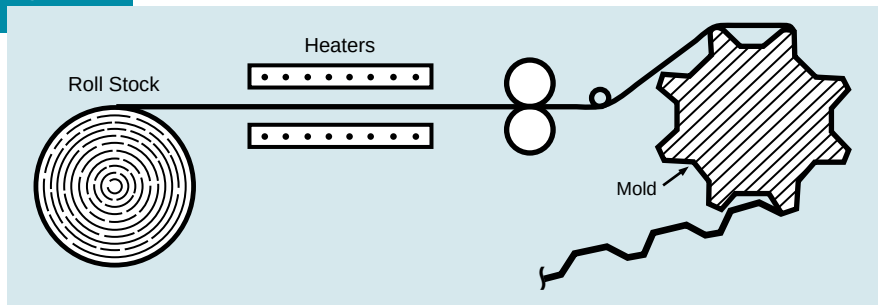

Figure 23 **Roll-Fed Continuous Thermoformers**

In-Line Thermoformer

The in-line thermoforming process is designed to take advantage of the hot sheet coming off of the extruder, so the sheet stock does not have to be reheated. The sheet is mechanically conveyed directly from the extruder take-off to the forming station. There is usually an extended distance between the extruder and the thermoformer allowing the sheet to cool to forming temperature. This type of thermoforming is usually limited to sheet 0.125 in. (3.20 mm) thick and applications that do not require optimum material distribution and close tolerances. This process is more difficult to control than other thermoforming processes. The major disadvantage of an in-line thermoformer is that, with the extruder and former being tied directly together, an upset in one causes a shutdown in both.

Figure 24 **In-Line Thermoformer**

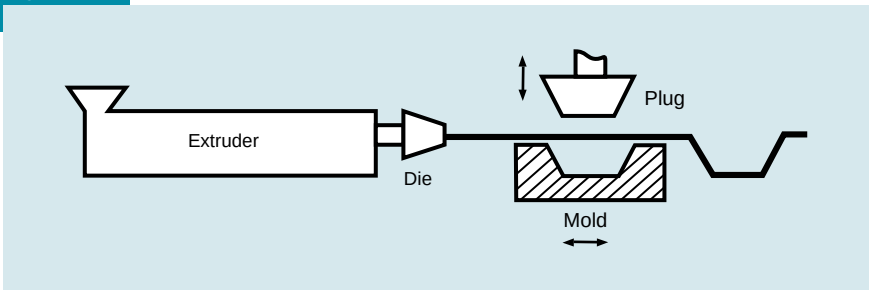

Figure 25 **In-Line Extruder-Fed Drum Thermoformer**

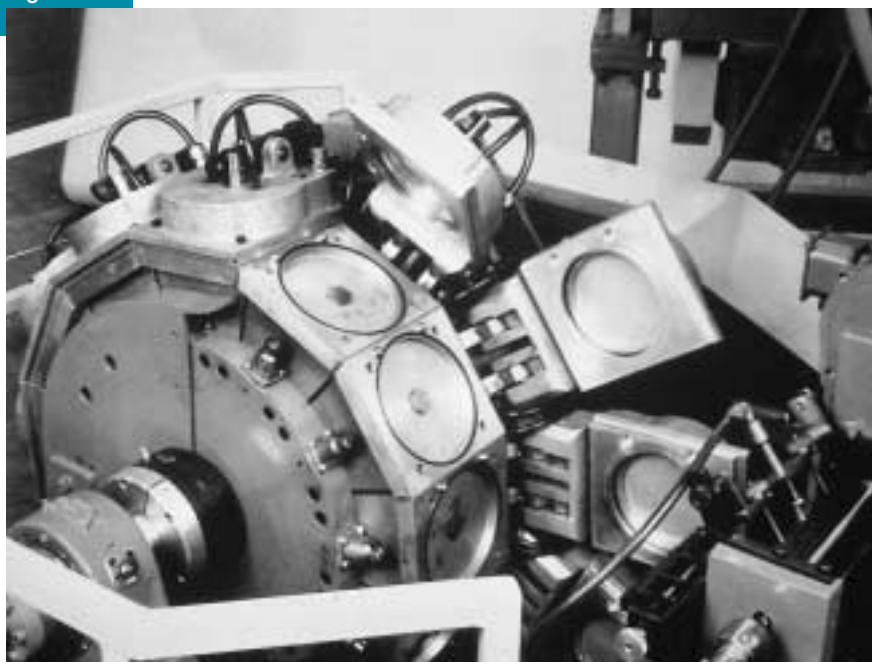

FEEDSTOCK

The thermoformer may be fed sheet continuously with cut sheet, rolled sheet, or directly from the extruder. Generally, cut-sheet stock is cut to the desired dimensions in-line at the extruder for a particular forming machine. Thicknesses of cut-sheet stock range from 0.030 to 0.500 in. (0.760 to 12.70 mm), depending upon finished part design requirements. Roll-fed or direct extrusion thermoforming is limited to sheet under 0.100 in. (2.54 mm) thick.

Sheet stock also includes coextruded sheet, laminated sheet, and foam-core sheet. For example, sheet coextruded of Lustran ABS with a cap of Centrex® weatherable polymer is used for outdoor applications requiring protection from UV exposure. Decorative and protective laminated films are used for such applications as luggage, office furniture, and for applications needing abrasion resistance. Foam-core sheet offers material cost savings and higher rigidity over solid sheet. However, foam-core sheet is more difficult to thermoform and usually has a limited depth-of-draw capability.

The following sheet properties have a significant influence on thermoformability and quality of the formed part:

- Dimensions (length, width, thickness, and flatness)
- Surface type and color
- Orientation
- Toughness
- Moisture content
- Contamination

SHEET GAUGE UNIFORMITY

Recommended sheet gauge uniformity for most thermoforming is ±1.0% or less both across the sheet and down the sheet in the extruded direction. For more critical commercial thermoforming applications, gauge uniformity of ±0.5% is required. This is often necessary when sheet gauge is less than 0.100 in. (2.54 mm). It is difficult to obtain tolerances as close as these during extrusion but the benefits are significant, including higher part output rates, less part-to-part thickness variations, and less scrap.

ORIENTATION (INTERNAL STRAIN)

During extrusion, a thermoplastic resin can be stretched to cause the polymer molecules to line up more in the direction of the stretch than in other directions. This is usually in the direction of extrusion and is called uniaxial orientation. The amount of orientation can be determined by placing samples of the sheet in an oven at 325˚F (163˚C) for 30 minutes between two thin sheets of aluminum dusted with talc. The amount of shrinkage represents the amount of orientation. Shrinkage of 10% to 15% in the direction of the extrusion is normal for sheet under 0.10 in. (2.50 mm) thick. Shrinkage of 5% to 10% is normal for heavy-gauge sheet (over 0.100 in./2.50 mm). Shrinkage in the “cross machine direction” is usually lower — normally 5% or less. As a rule, the less the shrinkage in either direction, the better. A large amount of orientation will cause differential drawing during forming. Resistance to draw is greater in the oriented direction than in unoriented direction. For sheet thicker than 0.175 in. (4.45 mm), high orientation (more than 15%) can cause sheet to pull free of the clamps during the heating step. For sheet less than 0.175 in. (4.45 mm) thick, high orientation (more than 25%) can cause the same thing to happen.

TOUGHNESS

The toughness (impact resistance) of a sheet is its ability to resist cracking when struck with an object. Toughness can influence the performance of the thermoformed part during assembly, shipment, or end-use. Impact resistance is most commonly determined using a falling dart impact test. The toughness of a sheet of thermoplastic material is a function of the inherent properties of the virgin resin as well as the combined influence of the resin, extrusion conditions, surface quality of the sheet, and regrind content.

Other properties, such as tensile stress at yield and fail, elongation at fail, and modulus of elasticity (stress divided by strain or distance) can be tested on extruded sheet specimens or on molded parts, per ASTM procedures.

For more information on the typical properties of sheet extruded from Bayer thermoplastic resins, contact your Bayer representative or call Bayer Polymers at 1-800-662-2927.

MOISTURE CONTENT AND CONTAMINATION

Moisture in and on the sheet and surface contamination are frequent causes for thermoforming problems (see "Troubleshooting Guide," page 48).

The hygroscopic nature of thermoplastics causes the absorption of moisture into the sheet as well as on its surface. High moisture content can cause surface defects during forming. It can also cause localized thinning in deep draw parts. To minimize moisture absorption, wrap the sheet stock in polyethylene film after it has been extruded. A 6-mil film is recommended, especially for prolonged storage during periods of high humidity.

Extruded sheet sometimes develops a static electrical charge. This causes the sheet to attract dust and foreign particles from the surrounding environment. Thermoformed parts made from dusty or dirty sheet will exhibit surface defects (see "Troubleshooting Guide," page 51). To help prevent the accumulation of dust or dirt on the extruded sheet, cover or wrap it with polyethylene film during any prolonged shutdown periods such as holidays and weekends.

In many cases, moisture or contamination problems affect only the top and/or bottom sheets of a stack of sheet. Often these sheets can still be used with good results by simply turning them over and using the unexposed side. Moisture can also be driven off these sheets by placing them around the thermoformer for several hours or by heating them very slowly in the thermoformer.

For the best-quality thermoformed parts, the sheet must be pre-dried and properly pre-heated. These two steps, while often taken for granted, are very important to the quality of the final part.

MATERIAL PRE-DRYING

Thermoplastics are hygroscopic materials. During normal shipping and handling, they will absorb atmospheric moisture which may result in bubble formation in the sheet or molecular weight degradation of the polymer and/or additives. This can adversely affect the color and decrease the physical properties of the final product, as well as contribute to poor control of thermoforming parameters.

Any circulating air oven able to maintain 250˚F (120˚C) for polycarbonate and 180˚ to 200˚F (80˚ to 95˚C) for ABS and PC ABS blends, within ±10˚F (±5˚C), should be adequate for sheet drying. Drying racks in the oven will allow the heated air to pass between the sheet. Stacking the sheet can result in inadequate drying of the pieces in the center. When properly designed, the racks can also prevent excessive sheet warpage if the oven overheats. The size and capacity of the oven will be determined by the thickness of the sheet and the rate at which it is being used. Table 6 lists recommended drying times for various thicknesses of polycarbonate and ABS sheet. Consult your Bayer representative or call Bayer Polymers at 1-800-662-2927 for recommended drying times for other Bayer thermoplastics.

Pre-dried sheet should not be exposed to normal room humidity for more than 10 to 15 minutes. Longer exposure may result in the sheet absorbing enough moisture to cause bubbles to form during thermoforming.

Table 6 **Recommended Drying Times for Various Sheet Thicknesses of Polycarbonate and ABS**

Polycarbonate			ABS		
Sheet Thickness		Drying Times	Sheet Thickness		Drying Times
in	(mm)		in	(mm)	
0.020	(0.51)	20 min	0.05	(1.25)	20 sec
0.030	(0.76)	30 min	0.10	(2.55)	40 sec
0.040	(1.02)	40 min	0.15	(3.80)	60 sec
0.060	(1.52)	2 hr	0.20	(5.00)	1 min, 15 sec
0.080	(2.03)	3.5 hr	0.25	(6.35)	1 min, 55 sec
0.090	(2.29)	4 hr	0.30	(7.60)	3 min
0.125	(3.18)	8 hr	0.35	(8.90)	4 min, 35
0.125	(3.18)	14 hr	0.40	(10.15)	6 min, 40 sec
0.250	(6.35)	24 hr	0.45	(11.45)	9 min, 40 sec
			0.50	(12.70)	13 min, 5 sec

MATERIAL PRE-HEATING

Makrolon® polycarbonate and Lustran® ABS sheet exhibit good hot tear strength and hot elongation properties that allow them to be used effectively in forming intricate shapes. Their softening point is gradual, permitting a wide latitude of operating temperatures and relative ease of process control. Although Makrolon polycarbonate sheet requires a relatively high forming temperature, production cycles are often shorter than those of other thermoplastics since the formed sheet sets quickly.

Before thermoforming, the sheet must be thoroughly heated to its proper forming temperature from the surface to the core and from the center to the edge of the sheet. The recommended sheet temperatures for forming Bayer thermoplastics are listed in the Process Temperature Guide in Appendix B.

Thermoplastic sheet will visually indicate when it is ready to be formed. As heat is applied, the sheet will first distort, then dimple, and begin to smooth out before finally sagging. Thicker sheet does not sag significantly more than thinner sheet because sag is more dependent on sheet temperature and total surface than thickness. Excessive sag in a sheet of large area can often be controlled by using a metal screen to shade the center of the sheet, as shown in Figure 26.

For prototype and single-piece forming, the oven temperature can be set just above the forming temperature of the thermoplastic. For Makrolon polycarbonate sheet, this temperature is about 400˚F (205˚C). For Lustran ABS sheet, this is about 350˚F (175˚C). This way, even sheets of differing thicknesses can be safely left in the oven for irregular intervals. This method will accommodate the variable rate of production in the thermoformer.

Figure 26 **Screening to Shade Hot Spots and Control Excessive Sag**

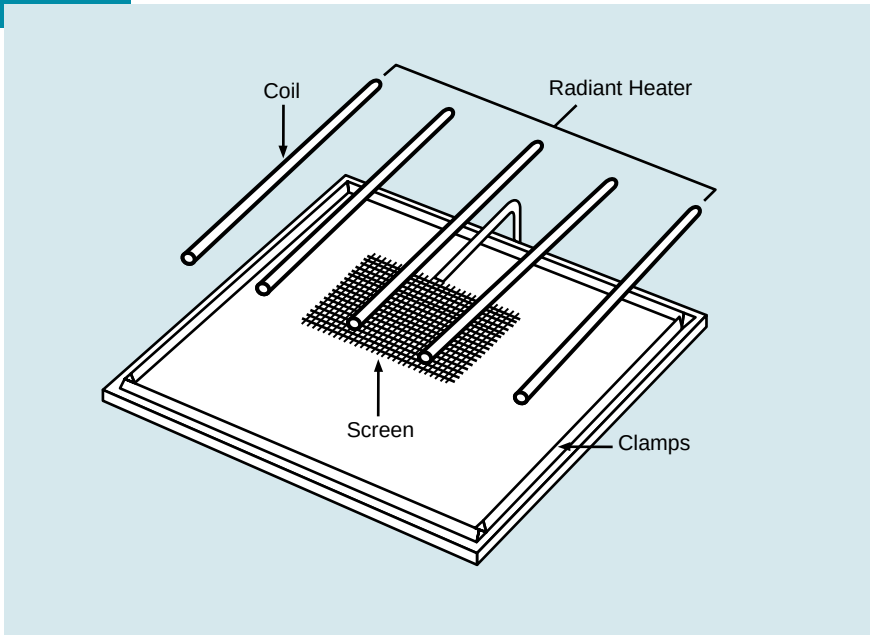

At more consistent forming rates, the oven temperature may be set higher for faster production, but the sheet must be taken from the oven according to an established schedule. If not, the sheet may sag or thermally degrade.

Typical heating times for Makrolon polycarbonate and Lustran ABS sheet to reach forming temperatures using typical commercial heating equipment are shown in Figure 27 and Figure 28. The maximum heating rate of thermoplastic sheet is approximately 0.5 seconds per mil using sandwich-type heaters and 0.75 seconds per mil using single-side heaters. Thermal degradation of Makrolon polycarbonate sheet can occur at surface temperatures over 450˚F (230˚C) and over 400˚F (205˚C) for Lustran ABS sheet.

Both thin film and heavy sheet should be heated 20˚ to 50˚F (11˚ to 28˚C) higher at the surface than is required for the forming process. Thin film loses heat in fractions of a second, faster than it can be moved from the preheat oven to the forming station. Heavy sheet can be held in transit or in the forming station for a short time to transfer some of its surface heat to the inside and equilibrate the heat. This minimizes imperfections due to surface roughness in the mold, dirt particles, or glove marks from hand forming.

Profile or area heating — varying the temperature across the sheet — can help control part thickness or wall thickness distribution when the part is formed. This is done by screening or using multiple heaters and controlling the temperature of each independently.

Typical Heating Times for Makrolon Polycarbonate Sheet*

Figure 27

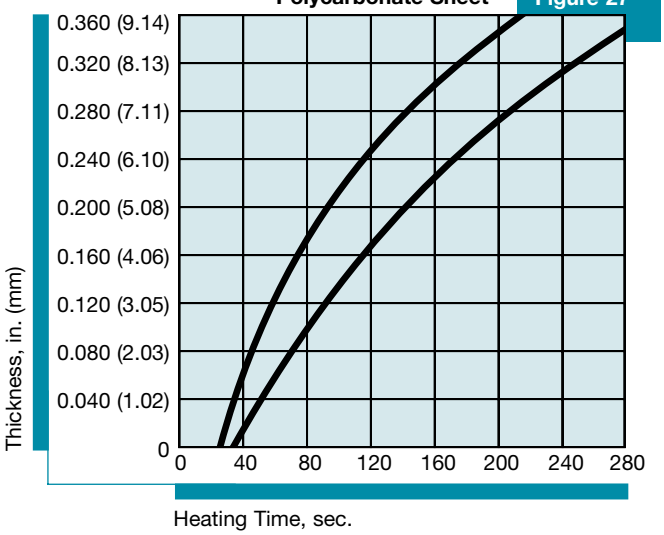

*Using a commercial sandwich-type heater.

Typical Heating Times for Lustran Sheet*

Figure 28

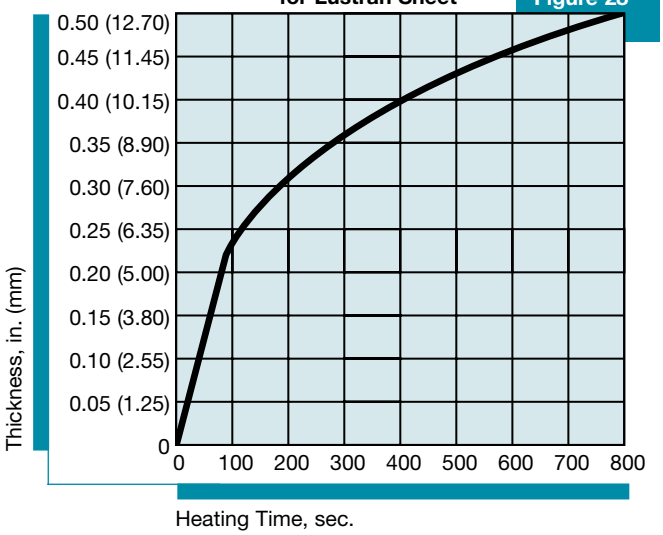

*Using a commercial sandwich-type heater.

In single-step thermoforming the preheated material is formed to its final shape in one operation. There is no pre-stretching of the material during the forming process. Several methods are classified as single-step forming techniques. They include:

- Drape forming with a male mold
- Drape forming with a female mold (straight vacuum forming)
- Pressure forming
- Free forming
- Matched-mold forming
- Trapped-sheet pressure forming
- Twin-sheet pressure forming

DRAPE FORMING WITH A MALE MOLD

Drape forming, also known as vacuum forming with a male mold, is generally considered to be the simplest method of thermoforming. Drape forming is ideal for deep-draw parts where the depth-to-diameter draw ratios can be up to 2:1. Internal mold detail may also be produced in the drape-forming process.

Drape forming is accomplished by pulling the clamped, heated sheet over the mold, creating a seal, then applying a vacuum to snug the sheet against the mold surface. Some thinning will occur as the vacuum quickly brings the sheet into contact with all mold surfaces. The sheet contacting the highest part of the mold will solidify at nearly original thickness, while the last areas to be formed will be the thinnest and weakest of the part. Drape forming with a male mold is shown in Figure 29.

DRAPE FORMING WITH A FEMALE MOLD (STRAIGHT VACUUM FORMING)

One of the more popular methods of thermoforming is drape forming with a female mold, also referred to as straight vacuum forming. Drape forming permits more cavities with smaller spacing and faster cycles. Drape forming can also produce parts with a sturdy frame since the wall thickness at the edge of the sheet will be nearly the same as the original sheet.

Figure 29 **Drape Forming with a Male Mold**

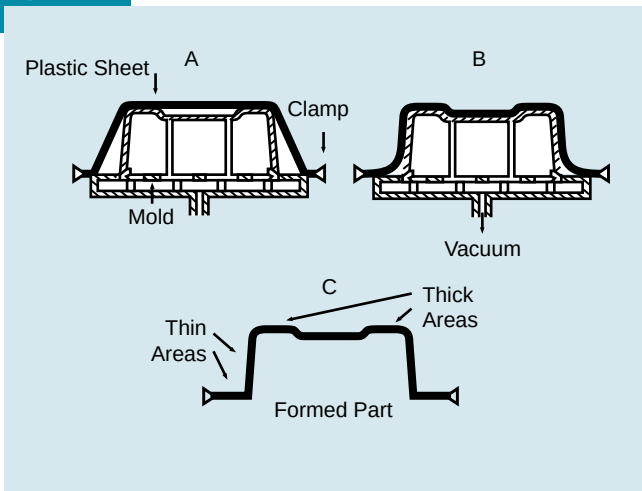

The clamped, heated sheet is pulled over the male mold (A). A vacuum is applied, snugging the sheet against the mold (B). The sheet contacting the highest part of the mold will be thickest (C).

Figure 30 **Drape Forming with a Female Mold**

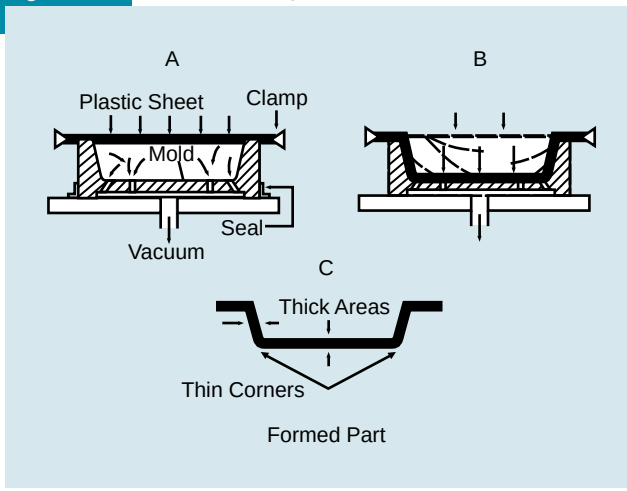

In drape forming with a female mold, the heated sheet is held to the mold to create a seal (A). A vacuum is then drawn pulling the sheet down into the cavities of the mold (B). After cooling, the areas reaching the mold last are the thinnest (C).

The sealed sheet is drawn into a female mold by applying a vacuum below the sheet to pull it into the mold's corners and cavities. The process is shown in Figure 30.

This simple process is most suitable for low-profile parts where deep draw is not required since the sheet tends to thin out proportionately to the depth of the cavity. The thinning of contoured parts is particularly noticeable when sharp inside corners must be formed.

PRESSURE FORMING

Pressure forming uses positive air pressure (compressed air at pressures up to 100 psi) to force the sheet into the mold. Since the force is exerted equally in all directions, pressure forming leaves no marks on the surface of the molded item. Compared to vacuum forming, the production cycle is faster with pressure forming because the sheet can be formed at lower temperatures with higher part definition and greater dimensional control. Because higher pressure forces the sheet into the mold, finished parts exhibit much more mold surface detail, such as lettering or surface texture.

With pressure forming, the clamped, heated sheet is brought into contact with the edge of the mold, creating a seal. Then positive air pressure is applied opposite the mold side of the sheet to force it against the mold. A vacuum is often applied underneath the sheet as an assist. Pressure forming with a female mold is shown in Figure 31.

FREE FORMING

Free forming, also known as billow or bubble forming, is a method which produces thermoformed shapes without using a mold. Because the sheet does not come in contact with a mold, free-formed parts exhibit minimal optical distortion as well as maximum transparency. This is important for applications such as skylights, window bubbles, domes, aircraft canopies, and visors.

In this process, the clamped, heated sheet is either blown into a bubble with air pressure or drawn into a cavity, without contact, with a vacuum. When the bubble reaches a specified height or depth, the positive or negative pressure holds the sheet until it cools.

Figure 31 **The Pressure Forming Process**

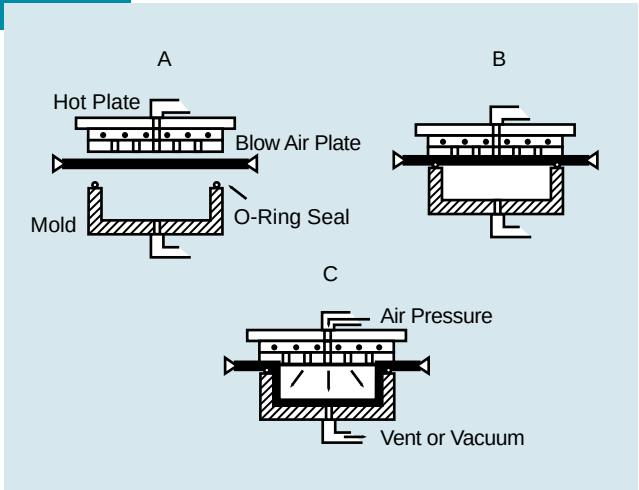

Pressure forming involves heating the sheet (A), then sealing the heated sheet against a mold on one side with a pressure box on the other (B). Pressure is applied through the box while the mold is vented or a vacuum is applied (C).

Figure 32 **Free Forming**

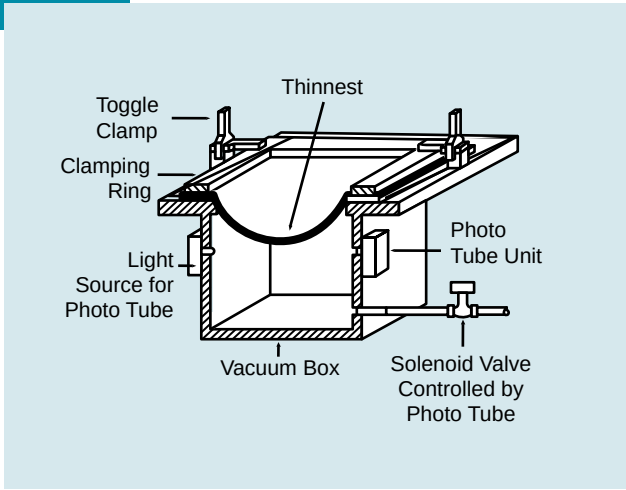

Free forming involves sealing the heated sheet to a pressure box, applying a vacuum to draw the sheet in a bubble to a specified depth, and holding it until the sheet cools. The formed part exhibits excellent clarity and uniform wall thicknesses.

The bubble is usually monitored by a photoelectric device for consistency. (See Figure 32.)

Makrolon® polycarbonate is one of the few thermoplastics that can be successfully molded using free-forming techniques. Due to the material's thermoelastic behavior at elevated temperatures, polycarbonate sheet fully retains its impact resistance even at the apex of the formed bubble. This is the result of an even wall thickness as the sheet billows. The practical limit of this process is a 2:1 diameter-to-height ratio.

MATCHED-MOLD FORMING

This method of thermoforming can provide excellent reproduction of mold detail, including lettering and grained surfaces, while maintaining the dimensional accuracy of the mold. The process uses matched molds to shape the parts. Vacuum is not used. Rather, the pressure to form the parts is mechanically induced from the matched mold halves pressing together. The sheet is heated to a temperature significantly lower than that for conventional thermoforming. Matched-mold forming costs more due to the tooling cost of two matched molds.

The heated sheet is either clamped over the female die or draped over the male die. As the two die sections close together, the sheet is formed into shape. Mold vents allow trapped air to escape. For polycarbonate, the vents are often connected to a vacuum to assist in pulling the sheet into the form. Mold clearance depends upon the tolerances required of the part. (See Figure 33.)

TRAPPED-SHEET PRESSURE FORMING

Plastic sheet is inserted between the mold cavity and a hot blow plate – a heated steel platen with minute holes to allow air to be blown through its face. The mold cavity seals the sheet against the hot plate. Air pressure applied from the female mold beneath the sheet forces the sheet into complete contact with the heated platen. A vacuum can also be drawn through the holes in the platen. After the plastic sheet is softened, air pressure injected through the blow plate forms the plastic sheet into the mold. (See Figure 34.)

Figure 33 **Matched-Mold Forming**

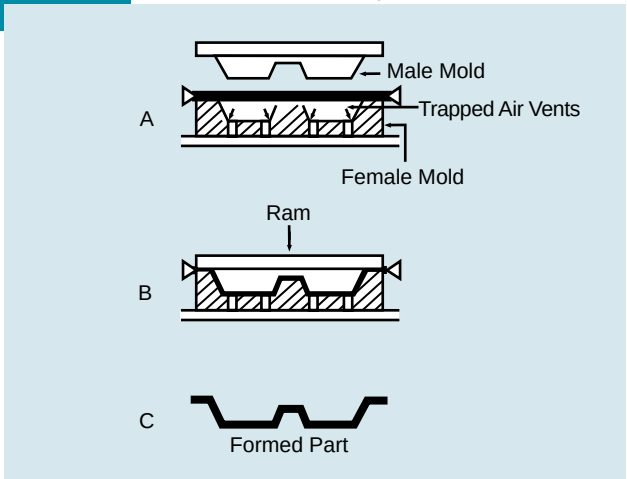

Matched-mold forming utilizes both male and female molds. The heated sheet is sealed to the female mold (A) and the molds are brought together, with vacuum applied as needed (B). Parts formed by the matched-mold process exhibit excellent definition and retain much of the dimensional accuracy of the mold (C).

Figure 34 **Trapped-Sheet Pressure Forming**

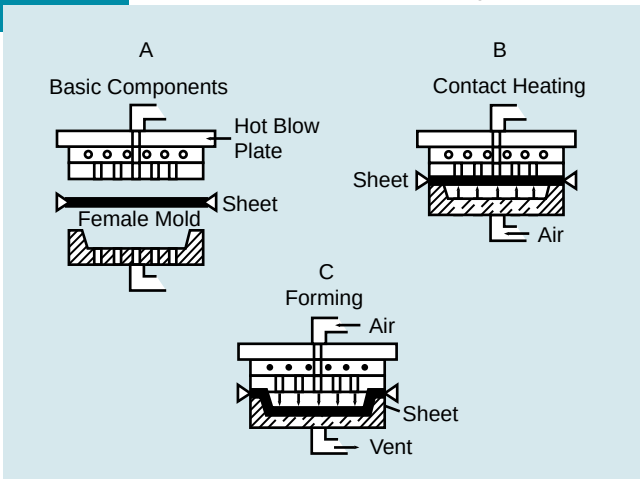

The plastic sheet is placed between the mold cavity and hot blow plate (A). The mold cavity seals the sheet against the hot blow plate while air pressure applied through the female mold blows the sheet completely against the hot plate (B). The softened sheet is then formed into the female mold with air pressure applied through the blow plate (C).

TWIN-SHEET FORMING

Twin-sheet forming uses two sheets of plastic and two female molds. The two sheets are usually heated to forming temperature in separate clamping frames. Then the heated sheets are placed one over the other between halves of the open mold. A blow pin is inserted between the heated sheets and the mold closes and seals the edges of the sheet. A vacuum is applied from the mold side of the sheet while air pressure is injected between the sheets, forming the plastic to the mold walls. (See Figure 35.)

Figure 35 **The Twin-Sheet Forming Process**

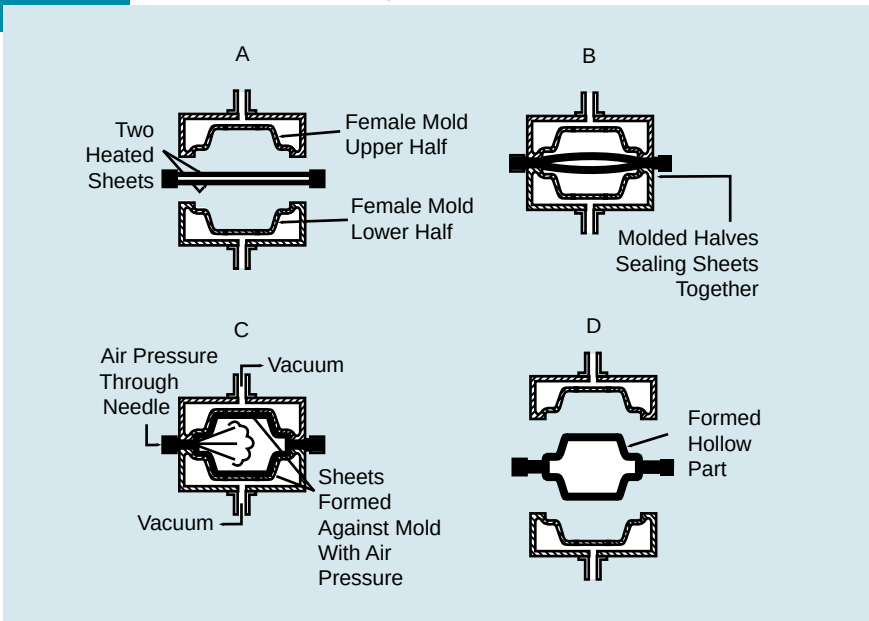

Twin sheet forming begins by placing two heated sheets between two female mold halves (A). The two female mold halves close into the hot sheets, sealing the sheets together (B), and a vacuum is drawn through the back of the molds while air pressure is injected in between the two sheets, forming the sheets against the mold (C). The result is a formed hollow part with sealed edges (D).

Multiple-step forming involves a pre-stretching step prior to the forming operation. Depending on the method, pre-stretching is accomplished with a plug assist, a plug assist and vacuum/air pressure, or vacuum/air pressure alone. Compared to single-step methods, pre-stretching promotes more even material distribution and wall thickness in the formed part. Multi-step techniques also allow for greater draw ratios.

Among the multiple-step forming techniques for Makrolon® polycarbonate and Lustran® ABS sheet are:

- Plug-assisted vacuum forming
- Plug-assisted pressure forming
- Slip-ring forming
- Vacuum snap-back forming
- Billow snap-back forming

PLUG-ASSISTED VACUUM FORMING

This technique combines vacuum forming with a plug-assisted pre-stretching step. The pre-stretching step provides for a more uniform wall thickness and prevents the severe thinning which can occur at the corners or edges in straight vacuum-formed parts.

The heated sheet is sealed to a female mold. Then the plug plunges the pre-heated sheet into the mold, close to but not touching the bottom. Since the plug does not touch the sides of the mold, the sheet is stretched uniformly. Finally, a vacuum pulls the material into direct contact with the mold's surface, forming the finished part. (See Figure 36.)

Figure 36 **Plug-Assisted Vacuum Forming**

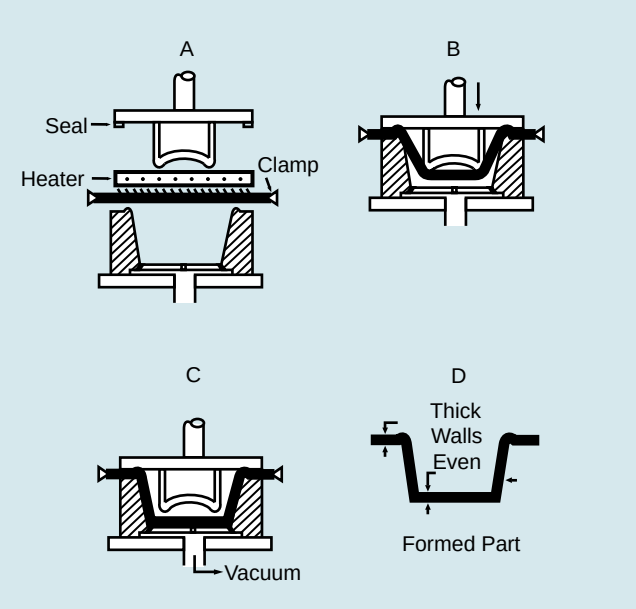

The heated sheet is sealed to the mold A). The plug plunges the sheet into the female mold, uniformly stretching the sheet (B). A vacuum is then drawn to pull the sheet against the walls of the female mold (C). The resulting formed part has walls of more even thickness than can be accomplished by single-step vacuum forming (D).

Figure 37 **Plug-Assisted Pressure Forming**

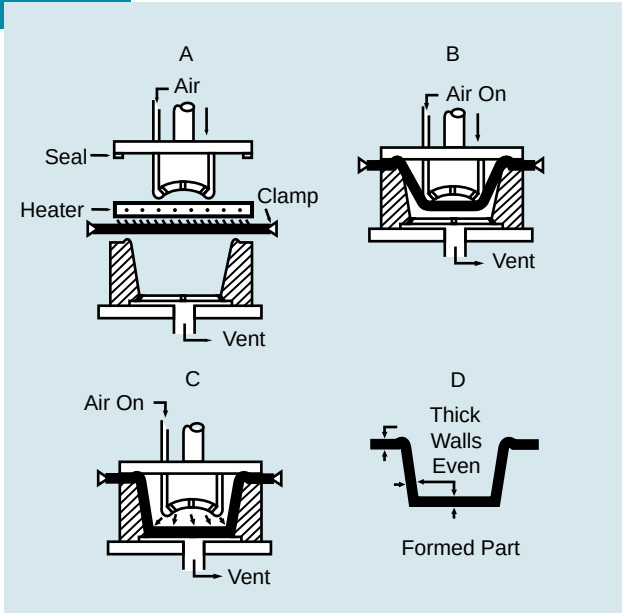

Plug-assisted pressure forming starts with heated sheet sealed to the mold (A). The plug assist moves into the sheet, pre-stretching it (B). Pressure is applied through the plug along with a vacuum assist through the mold (C). The formed part exhibits uniform wall thickness and the detail and definition of pressure-formed parts (D).

PLUG-ASSISTED PRESSURE FORMING

Plug-assisted pressure forming produces parts having uniform wall thicknesses together with the detail and definition of pressure forming. The heated sheet is sealed to the mold. The plug then forces the preheated sheet into the mold and air pressure is applied from the plug side. This pressure forces the sheet against the mold surface, forming the finished part. The mold is vented or a vacuum is applied under the sheet as an assist. (See Figure 37 on page 41.)

SLIP-RING FORMING

Slip-ring forming is similar to snap-back forming but utilizes a different method of pre-stretching the sheet. With this method, the billow is pushed upward by the rising mold which compresses the air ahead of it. Upon completion of the mold stroke, a vacuum pulls the air from between the mold and the sheet, tightly contouring the sheet to the mold. (See Figure 38.)

Slip-ring forming produces parts with uniform wall thicknesses, although final quality is dependent upon control of the billow formation and the specific geometry of the part's design.

VACUUM SNAP-BACK FORMING

The snap-back of the heated sheet onto the male mold during the forming operation gives this method its name. Vacuum snap-back forming can reduce starting sheet size, aids in material distribution, and minimizes chill marks. This method of thermoforming produces very high quality parts having relatively uniform wall thicknesses. All phases of this procedure can be controlled with timers and limit switches to help ensure consistent replication, part after part.

Figure 38 **Slip-Ring Forming**

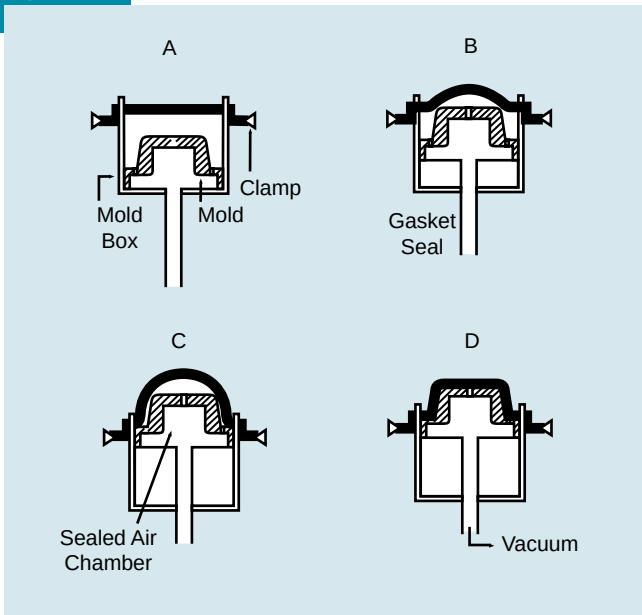

The heated sheet is clamped over the mold box (A). As the male mold rises, it forces the air ahead of it to billow the sheet (B and C). A vacuum is drawn through the male mold, causing the sheet to conform to the mold's shape (D).

Figure 39 **Vacuum Snap-Back Forming**

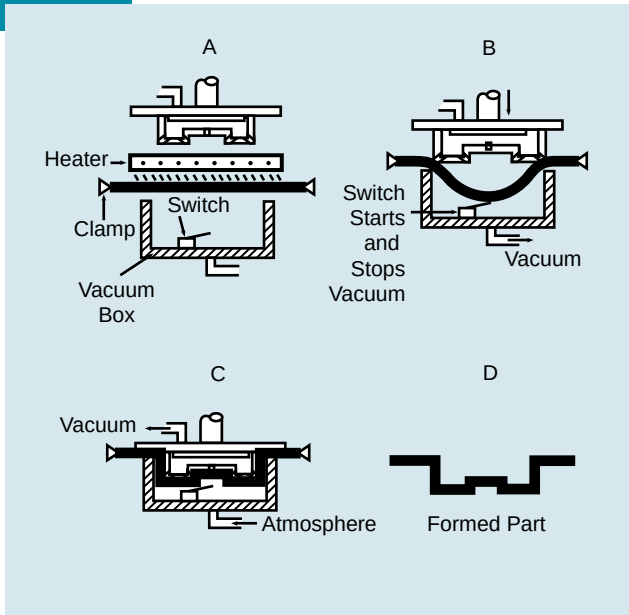

The heated sheet seals to the vacuum box (A). A vacuum is applied through the box to pre-stretch the sheet as the male mold seals against the box (B). The vacuum in the box is stopped and a vacuum is applied though the male mold, causing the pre-stretched sheet to snap back aginst the mold (C). The formed parts exhibit uniform wall thickness and good reproductivity (D).

In vacuum snap-back forming, the vacuum box contacts the clamped sheet and a vacuum is applied through the box to pull the sheet into it, forming a bowl-shaped bubble just ahead of the male mold. The bubble's concave shape can be controlled by the amount of vacuum employed. The bubble does not contact the walls of the vacuum box. The male mold reaches its final position and seals to the sheet. The vacuum is released and the hot sheet snaps back around the male mold through which a vacuum is applied in order to assist the snap-back effect. (See Figure 39.)

BILLOW SNAP-BACK FORMING

The billow snap-back process is recommended for any parts requiring a uniform, controllable wall thickness. Once the heated plastic sheet is clamped and sealed across the pressure box, controlled air pressure applied under the sheet causes a large bubble to form. The sheet pre-stretches about 35% to 40%. Then a plug is forced into the bubble while air pressure beneath the sheet remains constant. As the male plug closes into the pressure box, vacuum applied from behind the plug creates a uniform draw. (See Figure 40.)

Figure 40 **Billow Snap-Back Forming**

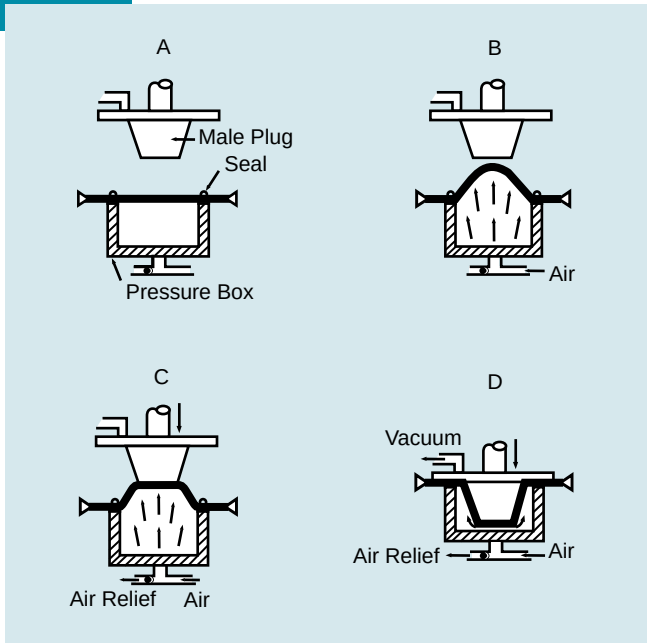

The heated plastic sheet is clamped and sealed across the pressure box (A). The sheet is first blown upward in a billow for a good, uniform stretch (B). Then, the plug is dropped down to begin forming the inside contour of the shape (C). When the plug closes on the pressure box, a vacuum from behind the plug pulls the plastic to complete the draw (D).

Much of the heat absorbed during the heating cycle must be removed from the thermoplastic part before it can be demolded. Otherwise, distortions or warpage in the part may occur. If the part is formed over a male mold, it must be removed from the mold before thermal shrinkage makes removal too difficult. It may be necessary to retard the natural cooling rate of heavy-gauge parts, which are more likely to form internal stresses.

PART COOLING

Cooling is accomplished by conductive heat loss to the mold or convective heat loss to the surrounding air. It is important to select the appropriate method.

Conductive cooling while the part is in contact with the mold is very efficient if metal molds having water cooling channels are used. It is important to maintain a uniform mold temperature.

By keeping the cooling water temperature at an elevated level, the formation of chill marks can be minimized or prevented altogether. Mineral- or metal-powder-filled thermoset plastic molds generally remove heat more slowly, increasing cycle times. Wood molds, due to their heat build-up, are not suitable for fast production runs.

Parts with thick walls require long cooling times. Cooling can be accelerated by using fans to blow air on the exposed side of the part while it is still in the mold. The use of fans has the added advantage of cooling the sheet clamping frame at the same time as the part. With Lustran® ABS, a water mist is sometimes used with fans to increase the cooling capacity of the air. However, fans can create drafts which could possibly interfere with subsequent heating cycles. Therefore, use draft shields when cooling parts and heating sheet in the same vicinity at the same time.

Figure 41 **Part Cooling with a Water Mist**

A water mist is sometimes used to accelerate the cooling of thermoformed Lustran ABS sheet.

Makrolon® polycarbonate must be cooled below 290˚F (145˚C) and Lustran ABS must be cooled below 200˚F (95˚C) for the part to be dimensionally stable enough to prevent damage during removal. (See the Process Temperature Guide in Appendix B for the recommended demold temperatures for Bayer thermoplastics.) Once the contact between the mold and the part is broken, heat transfer is markedly reduced, though the part will continue to cool. Therefore, keep the time lapse between removal and trimming constant from part to part to avoid trim dimensional error.

PART REMOVAL

Generally, if cooling is accomplished in a careful, suitable manner that is compatible with the thermoplastic material, part removal is simply a matter of opening the forming station and ejecting the part by hand. Air ejection systems and stripping mechanisms are also often used to assist in part removal. In addition, spray silicones and fluorocarbons may be used as mold release agents.

As previously mentioned, mold design and surface finish greatly influence the ease of part removal (see “Mold Design,” page 14). If there is an insufficient number of air holes in molds that have air ejection systems, increasing the air pressure can sometimes improve part removal. If not, it might be necessary to increase the number of air ejection holes.

After the thermoplastic sheet is formed, any of several post-forming steps may be required to finish the parts. Post-forming may include trimming the edge of the sheet, cutting out the part, adding holes or vents, or joining or fastening to other parts. Finally, the part may be painted, decorated, or otherwise covered.

TRIMMING, CUTTING, AND FINISHING

Thermoplastics require heavy-duty cutting and handling equipment. They can be cut with a shear, saw, hot knife, or water jets. A saber saw, band saw, router, or table saw can be very effective for trimming. When high-speed cutting fixtures are used for production trimming, carbide tips are recommended. Steel rule dies work best for punching and stamping.

Cutting oils and other lubricants are not recommended since they may not be compatible with the thermoplastic material. Water can be used as a coolant.

Trim and scrap can be ground and reused for extrusion processing, providing the material is kept free of contamination and is properly dried. Use no more than 20% regrind in the production of extruded polycarbonate sheet, and no more than 40% in the production of ABS sheet. (See "Regrind Usage," page 61. Also consult your Bayer representative or call Bayer Polymers at 1-800-662-2927 for more information on the use of regrind of Bayer thermoplastics in the extrusion of sheet.) Discard any degraded, discolored, or contaminated material.

JOINING

A complete description of joining techniques for parts thermoformed of Bayer thermoplastics can be found in the Bayer publications, *A Guide for Joining Techniques* and *Snap-Fit Joints in Plastics*, which are available from your Bayer representative or by calling Bayer Polymers at 1-800-662-2927. The following is a brief overview of the methods commonly employed.

Figure 42 **Steel-Rule Die-Cutting**

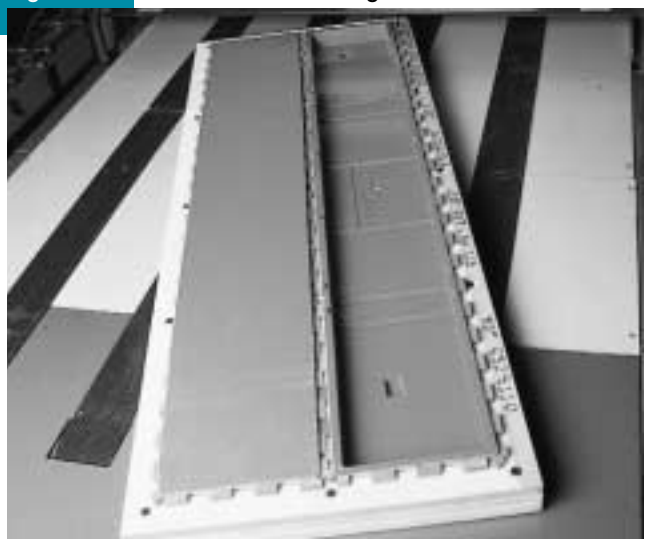

Steel-rule die-cutting can swiftly and cleanly punch or stamp parts from a sheet.

Figure 43 **Hand Trimming**

Cutting openings in contour parts is often done with hand-held power tools. Carbide tips are recommended.

Mechanical Fastening

Of the various methods used to join thermoformed parts, mechanical fasteners are the most satisfactory for several reasons:

- Mechanical fastening results in high joint strength
- The extreme care in surface preparation necessary with other techniques is avoided
- The ultimate strength of the joint is immediate and remains stronger for a longer period of time than with other methods
- There is no danger from hazardous chemicals or of chemicals attacking the thermoplastic material

Thermoformed parts can be joined with machine screws; bolts, nuts, and washers; rivets; and spring steel fasteners. Self-threading screws — which may be either thread-cutting or thread-forming — are an economical means of securing separable joints. Thread-*cutting* screws are preferable to thread-*forming* screws because thread-cutting screws actually remove material during installation, avoiding high-stress build-up, Thread-forming screws displace material during installation in the receiving hole, which can cause high stress levels in the part.

Press and Snap Fits

Press and snap fits are a simple, economical, and rapid way of joining thermoformed components because of their toughness and flexibility.

Figure 44 **Mechanically Fastened Thermoformed Parts**

Thread-cutting phillips-head screws were used to fasten the metal "piano" hinge on the electronic cabinet, which is constructed of thermoformed components.

Solvent Bonding

Parts thermoformed from thermoplastic sheet can be solvent-bonded to themselves or many other plastics. Methylene chloride* is a good solvent if maximum impact strengths are not required. In order to properly solvent-bond parts, a good mating surface is needed along with some method of applying clamp pressure for approximately five minutes. The solvent bond should be dried at least 24 to 48 hours before being tested.

NOTE: Before working with these materials, consult the MSDS, product labels, and other safe handling information — including the use of personal protective equipment — provided by the manufacturer.

Adhesive Bonding

Adhesive bonding is also a practical method of joining parts thermoformed from thermoplastic sheet, but with the same limitations as solvent bonding. Several different adhesive bonding systems, such as urethanes, epoxies, acrylics, and silicones, have been used.

CAUTION: Always test an adhesive system for compatibility with polycarbonate or ABS before production.

*Results of a recent National Toxicology Program inhalation bioassay on methylene chloride demonstrated that it is an animal carcinogen.

NOTE: Before working with these materials, consult the MSDS, product labels, and other safe handling information — including the use of personal protective equipment — provided by the manufacturer.

Ultrasonic Bonding

Basically, ultrasonic bonding involves the conversion of electrical energy into mechanical vibratory energy which causes the thermoplastic to melt and fuse, thereby creating a bond. Makrolon® polycarbonate can be joined to itself by this method, and it may be joined to parts molded of some grades of Lustran® ABS and Bayblend® polycarbonate/ABS blends.

PRINTING AND DECORATING

Parts thermoformed from Bayer thermoplastic sheet can be decorated by the wide variety of methods typically used for thermoplastics. These techniques include lacquering, painting, vacuum metallizing, hot stamping, and silk screening.

Test all ink and decorative coatings for compatibility with the thermoplastic before use. It is possible for a part to lose impact strength as a result of the coating. Conduct all testing on finished parts. For more information, consult your Bayer representative or call Bayer Polymers at 1-800-662-2927.

Printing

Bayer thermoplastics can be printed by many techniques including silk screen, rotogravure, and offset printing. Generally, no surface preparation other than cleaning is necessary. Laser printing has also been used successfully for very fine, high-precision work.

Labeling

Simple, rapid labeling methods are commonly used. These include hot stamping, heat transfers, decals, and gummed or self-adhesive labels. Again, test the adhesive system for compatibility with the thermoplastic.

Painting

Some Bayer thermoplastics often require no painting because of their availability in a variety of integral colors and superior surface appearance. Nevertheless, many paint and primer systems are readily available for general use on thermoplastics. Among the specialty coatings used are those such as conductive coatings which provide EMI (electromagnetic interference) shielding for sensitive electronics.

Metallizing

Metallizing offers the combined advantages of plastic and metal. The plastic provides economy, design freedom, and corrosion resistance while metallizing gives the parts a bright, metallic appearance, conductivity, and reflectivity.

Vacuum metallizing is the most common method of metallizing thermoplastics. This method is best-suited for highly volatile metals such as aluminum. To promote adhesion, a base coat is usually applied to the cleaned part. Mold design is critical for parts to be metallized because metallizing has a tendency to accentuate imperfections and to cause large, flat surfaces to appear convex.

Sputtering is a recently developed method of metallizing that does not depend upon a metal's volatility. Essentially any metal or alloy can be sputtered onto a thermoplastic after a compatible base coat has been applied. The flame-and-arc-spray method involves spraying molten, atomized metal onto the part surface. The result is a textured rather than a highly polished surface. This technique is widely used for applying EMI coatings. No adhesive is required.

Description of Problem	Possible Causes	Possible Corrective Action
Voids or bubbles in formed parts	• Excessive moisture.	• Pre-dry sheet as recommended in Table 6, page 34. • Preheat sheet. • Heat sheet on both sides. • Protect sheet from moisture until ready to use.
	• Heating sheet too rapidly.	• Lower heater temperature. • Increase distance between heater(s) and sheet. • Blow air across the sheet's surface during heating.
	• Uneven sheet heating.	• Check heater output and/or power consumption. • Use pattern heating. • Screen by attaching baffles, masks, or screening.
Crazed or brittle parts	• Mold cooling.	• Increase mold temperature.
	• Overheated part.	• Remove part from mold as soon as it is stable.
	• Incompatible mold lubricant.	• Change mold lubricant.

Description of Problem	Possible Causes	Possible Corrective Action
Warped parts	• Mold too cold.	• Preheat mold.
	• Clamp frames too cold.	• Preheat clamp frames.
	• Overheated part.	• Increase cooling cycle time. • Use fans to help cool part. • Decrease mold temperature.
	• Uneven part cooling.	• Add more coolant channels or tubing to mold. • Check for plugged water flow.
	• Poor material distribution.	• For deep drawing, use pre-stretching or plug assist. • Check for uneven sheet heating. • Check sheet gauge.
	• Poor mold design.	• Add vacuum holes. • Add moat to mold at trim line. • Check for plugged vacuum holes.
	• Poor part design.	• Break up large flat surfaces with ribs where practical. • Re-design with tapers or fillets.
Texture washout and excess gloss	• Forming temperature too high.	• Reduce heater temperature. • Decrease heater cycle time.
	• Improper heating technique.	• Heat sheets from smooth side; keep texture side cool. • Pre-coat texture with strippable mask such as Spraylat Corp. TR4997.

Description of Problem	Possible Causes	Possible Corrective Action
Non-uniform drape	• Uneven sheet heating.	• Check heater output and adjust. • Use selective screening or shading to control heating. • Check for cold air drafts in heating station.
Incomplete forming of part, poor detail	• Sheet too cold.	• Increase heating time. • Increase heater temperature. • Increase watt density. • Check for heating uniformity.
	• Cold clamping frame.	• Preheat clamping frame.
	• Insufficient vacuum.	• Check for clogged vacuum holes. • Check for proper location of vacuum holes. • Increase number of vacuum holes. • Increase size of vacuum holes.
	• Vacuum not drawn fast enough.	• Use vacuum slots instead of holes where possible. • Increase size of vacuum holes. • Increase vacuum surge and/or pump capacity. • Increase size of vacuum line and valves; avoid bends and tee-elbow connections.
	• Part draw ratio too large.	• Check for vacuum system for leaks.
	• Insufficient pressure.	• Add plug, pressure, or frame assist. • Increase air pressure on side of part opposite mold surface, if mold can withstand this force. • Use frame assist. • Use plug, silicone, slab rubber, or other pressure assist.
	• Poor mold design.	• Add vacuum holes. • Check for good seal between clamp frame and vacuum box.

Description of Problem	Possible Causes	Possible Corrective Action
Scorched sheet	• Top or bottom surface too hot.	• Decrease heating cycle time. • Decrease heater temperature.
Poor surface finish	• Mold surface too rough.	• Draw-polish mold or use mold material better suited to mold service requirements.
	• Mold mark-off.	• Use silicone or powdered mold lubricant sparingly.
	• Draft angle too shallow.	• Increase draft angle.
	• Air entrapment over smooth mold surface.	• Grit-blast mold surface. • Add vacuum holes in affected area.
	• Insufficient vacuum.	• Add vacuum holes. • Check for proper location of vacuum holes. • Check vacuum system for leaks. • Check for plugged vacuum holes.
	• Mold too hot.	• Decrease mold temperature.
	• Mold too cold.	• Increase mold temperature.
	• Dirty sheet.	• Clean sheet with deionizing airgun.
	• Dirty mold.	• Clean mold with deionizing airgun.
	• Dust in atmosphere.	• Clean thermoforming area. • Isolate thermoforming area and filter air. • Check quality and type of regrind.
	• Contaminated sheet.	• Separate sheet with paper while in storage.
	• Scratched sheet.	• Polish sheet.

Description of Problem	Possible Causes	Possible Corrective Action
Blushing or loss of color	• Insufficient sheet heating.	• Lengthen heating cycle. • Raise temperature of heaters.
	• Overheated sheet.	• Reduce heater temperature. • Decrease heating cycle time. • Check for runaway heaters, if overheating is localized.
	• Mold too cold.	• Increase mold temperature.
	• Assist plug too cold.	• Increase plug temperature.
	• Overdrawn sheet. (Part too thin.)	• Increase sheet gauge. • Increase sheet temperature. • Use pre-draw. • Use plug assist for deep-draw parts. • Increase stretch rate.
	• Sheet cools before completely formed.	• Move mold into sheet faster. • Increase vacuum draw rate. • Be sure molds and plugs are hot.
	• Poor mold design.	• Reduce depth of draw. • Increase mold draft (taper). • Enlarge radii.
	• Uncontrolled use of regrind.	• Check quality of regrind. • Decrease quality of regrind. (See “Regrind Usage”, page 61.)

Description of Problem	Possible Causes	Possible Corrective Action
Chill marks or mark-off	• Mold temperature too low; stretching stops when sheet meets cold mold or plug.	• Increase mold temperature.
	• Insufficient draft angle and radii.	• Increase draft angles and mold radii.
	• Plug temperature too low.	• Increase plug temperature. • Use wood plug assist. • Cover plug with cotton flannel or felt.
	• Sheet too hot.	• Reduce heater temperature. • Heat more slowly. • Use fans to reduce the surface of hot sheet slightly before forming.
Nipples on mold side of formed part	• Vacuum holes too large.	• Decrease hole size.
	• Dust on mold or sheet.	• Clean mold and sheet with deionizing air gun.
	• Mold too cold.	• Increase mold temperature.
	• Mold surface too smooth.	• Draw-sand mold surface with medium-grit paper.
	• Vacuum rate too high.	• Place small orifice over main vacuum hole.
	• Sheet too hot.	• Decrease heating cycle time. • Decrease heater temperature.

Description of Problem	Possible Causes	Possible Corrective Action
Webbing, bridging, or wrinkling	• Sheet too hot in center.	• Screen center of sheet, allowing edges to heat first; use taller vacuum box to provide more pull in area. • Decrease heating cycle time. • Decrease heater temperature.
	• Melt strength of resin too low (sheet sag too great).	• Change to resin with lower melt index. • Use minimum sheet temperature.
	• Sheet too cold in webbing area.	• Use pattern heating. • Increase billow height.
	• Mold too cold.	• Increase mold temperature to near DTUL of resin.
	• Vacuum rate too fast.	• Slow down vacuum rate. • Use smaller vacuum holes. • Restrict main vacuum line.
	• Insufficient vacuum.	• Check vacuum system for leaks. • Increase number of vacuum holes or slots. • Check for clogged vacuum holes. • Check for proper location of vacuum holes. • Increase size of vacuum holes.
	• Draw ratio too great in area of mold, or poor mold design or layout.	• Redesign mold. • Use plug or ring mechanical assist. • Use female mold instead of male mold. • Add take-up blocks to pull out wrinkles. • Increase draft and radii where possible. • Increase space between multiple articles. • Speed up assist and/or mold travel. • Redesign grid, plug, or ring assists.
	• Blanks too large for mold.	• Leave minimum of material around mold.
	• Uneven cooling due to slow drape speed.	• Drape at higher speed.

Description of Problem	Possible Causes	Possible Corrective Action
Insufficient draw-down	• Improper sheet heating.	• Increase heating time and temperature.
	• Insufficient vacuum.	• Check vacuum system for leaks.
Poor wall thickness distribution and excessive thinning in some areas	• Excessive thickness variation in sheet gauge.	• Check sheet gauge.
	• Uneven heating.	• Check uniformity of heater output. • Use screening or shading to control heating. • Check for drafts or air current in heating station.
	• Improper forming technique.	• Use billow or snap-back forming method. • Reduce time delay between pre-stretch and mold drawing. • Control height.
	• Excessive sag.	• Reduce sheet temperature. • Use pattern heating.
	• Cold mold.	• Increase mold temperature. • Check for uniform mold heating. • Check temperature control system for scale or plugging.
	• Sheet pulls from rails.	• Air-cool rails prior to heating. • Move rails in to grasp more sheet. • Use drag bands at rail edge. • Increase rail tooth bite.
	• Sheet slips from frame.	• Adjust frame alignment. • Increase frame clamp pressure. • If retainer springs are used, change to high-temper springs. • Pre-heat frames prior to inserting sheet. • Check heaters around clamp area for proper operation. • Screen or shade center of sheet to allow more heat at perimeter.

Description of Problem	Possible Causes	Possible Corrective Action
Shrink marks	• Inadequate vacuum.	• Check vacuum system for leaks. • Increase vacuum surge tank and pump capacity. • Check for plugged vacuum holes. • Add vacuum holes. • Increase size of vacuum holes.
	• Mold surface too smooth.	• Roughen mold surface. • Change to lower-conductivity mold material.
	• Part shrinkage during forming.	• Increase forming pressure. • Increase mold temperature. • Reduce free surface cooling.
	• Inadequate air pressure, if pressure-forming.	• Increase airflow rate. • Increase air pressure. • Increase cycle time under pressure.
Shiny streaks on part	• Sheet too hot in spots.	• Lower heater temperature in overheated area. • Use screening or shading to control heating. • Decrease heating cycle time. • Increase distance between heater and sheet.
Excessive shrinkage or distortion of part after removing from mold	• Part not adequately cooled.	• Increase cooling cycle time. • Use cooling fixtures. • Increase capacity of cooling system. • Use fan or vapor spray mist to cool part faster on mold.
	• Mold too hot.	• Reduce mold temperature. • Increase mold coolant flow rate.

Description of Problem	Possible Causes	Possible Corrective Action
Corners too thin in deep draw	• Uncontrolled material distribution.	• Consider other techniques such as billow-up, plug assist, etc.
	• Sheet too thin.	• Use heavier-gauge sheet.
	• Sheet temperature too high at corners.	• Use screening or shading to control heating pattern.
	• Mold temperature not uniform.	• Adjust temperature control system for uniformity. • Check operation of mold heating system.
	• Drape speed too fast.	• Reduce drape speed.
Difficult part removal	• Part or female mold temperature too hot.	• Increase cooling cycle time. • Decrease mold temperature.
	• Male mold too cold, part sticking.	• Increase mold temperature.
	• Male mold too hot, causing part distortion.	• Decrease mold temperature.
	• Insufficient mold draft.	• Increase taper/draft. • Use female mold. • Remove part from mold as soon as possible.
	• Ejection pressure too low.	• Add air holes. • Increase injection pressure. • Use powdered mold release.
	• Mold undercuts.	• Use stripping frame. • Increase air-eject air pressure. • Remove part from mold as soon as possible.
	• Wood mold.	• Apply light coating of petroleum jelly to mold surface. • Spray mold surface with Teflon* coating.
	• Rough mold surface.	• Polish corners or entire mold surface. • Use mold-release agent. • Use Teflon* spray.

*Teflon is the registered trademark of E.I. DuPont de Nemours.

Description of Problem	Possible Causes	Possible Corrective Action
Loss of vacuum seal	• Cold clamp frames.	• Preheat clamp frames.
	• Improper spacing between clamp frames and vacuum box.	• Adjust space between clamps and vacuum box to between 0.50 and 0.750 in. (13 and 19 mm).
Sheet sticking to plug	• Plug temperature too hot.	• Decrease plug temperature. • Use mold release agent on plug. • Apply a Teflon* coating. • Cover plug with felt cloth or cotton flannel.
	• Wood plug assist.	• Cover plug with felt cloth or cotton flannel. • Apply a light coating of petroleum jelly on plug. • Use mold-release agent on plug. • Apply a permanent Teflon* coating to surface of plug.
Tearing of sheet during forming	• Mold design.	• Increase corner radius.
	• Sheet too hot.	• Decrease heating cycle time. • Decrease heater temperature. • Check sheet for uniform heating. • Preheat sheet.
	• Sheet too cold (usually thinner gauges).	• Increase heating cycle time. • Increase heater temperature. • Check sheet for uniform heating. • Preheat sheet.
	• Poor material distribution.	• Check sheet for variations in gauge. • Check sheet for uneven heating.
	• Pre-stretch too large.	• Reduce billow blowing time. • Reduce billow temperature.

*Teflon is the registered trademark of E.I. DuPont de Nemours.

Description of Problem	Possible Causes	Possible Corrective Action
Cracking of part during service	• Stress concentration.	• Increase fillets. • Increase sheet temperature. • Be sure part is completely formed before removing from mold. • Use proper forming temperature and cooling rate for deep-draw parts. • Increase mold temperature.
	• Poor part or mold design.	• Re-evaluate design.
	• Sheet gauge too thin for draw.	• Increase sheet gauge.
	• Uneven sheet temperature.	• Use screening or shading to control heating pattern.
Whitening of sheet	• Sheet too cold.	• Increase heating cycle time. • Increase heater temperature.
	• Sheet drawn beyond yield point of material.	• Increase speed of drape.
Poor embossing detail	• Embossing depth too shallow for draw ratio.	• Increase depth of embossing pattern. • Decrease draw ratio.
	• Drawing not uniform.	• Use screening or shading to control heating pattern. • Use plug assist and/or billow to pre-stretch sheet.
Excessive sheet sag	• Sheet too hot.	• Decrease heating cycle time. • Decrease heater temperature.
	• Sheet area too large.	• Use screening or shading to control heating, particularly in the center of the sheet.
Varying sag levels among sheets	• Sheet-to-sheet temperature variation.	• Check for cold air drafts in heating station. • Be sure all sheet is sufficiently cooled after extrusion.
	• Uncontrolled use of regrind in sheet. (See “Regrind Usage”, page 61.)	• Control quality of regrind. • Decrease or control percentage of regrind.
Non-uniform billow	• Uncontrolled sheet heating.	• Check heaters for proper operation. • Use screening or shading to control heating. • Check for cold air drafts in heating station.
	• Non-uniform die pressure within billow.	• Check air pressure system for leaks. • Check seal between sheet and billow box. • Redirect incoming air to billow box.

SAFETY CONSIDERATIONS

GENERAL

Wear safety glasses and/or face shields when thermoforming any Bayer thermoplastic sheet and use proper gloves and other appropriate garments when handling hot tools and auxiliary equipment.

HEALTH AND SAFETY PRECAUTIONS

Appropriate literature has been assembled which provides information concerning health and safety precautions that must be observed when handling Bayer Polymers products mentioned in this publication. Before working with any of these products, you must read and become familiar with the available information on their hazards, proper use, and handling. This cannot be overemphasized. Information is available in several forms, e.g., material safety data sheets (MSDS) and product labels. Consult your local Bayer Polymers representative or contact the Bayer Product Safety and Regulatory Affairs Department in Pittsburgh, Pennsylvania at 1-800-662-2927.

For materials that are not Bayer Polymers products, appropriate industrial hygiene and other safety precautions recommended by their manufacturer(s) must be followed.

GENERAL INFORMATION

REGULATORY COMPLIANCE

Some of the end-uses of the products described in this brochure must comply with the applicable regulations, such as the FDA, NSF, USDA, and CPSC. If you have questions on the regulatory status of any Bayer thermoplastic sheet, please contact your local Bayer Polymers representative or the Bayer Regulatory Affairs Manager in Pittsburgh, Pennsylvania.

REGRIND USAGE

Where end-use requirements permit, regrind may be used with virgin material in quantities specified in individual product information bulletins, provided that the material is kept free of contamination and is properly dried (see drying conditions in product information bulletins). Any regrind used must be generated from properly molded/extruded parts, sprues, runners, trimmings, and/or film. All regrind used must be clean, uncontaminated, and thoroughly blended with virgin resin prior to drying and processing. Under no circumstances should degraded, discolored, or contaminated material be used for regrind. Materials of this type should be discarded.

MEDICAL GRADE INFORMATION

It is the responsibility of the medical device, biological product, or pharmaceutical manufacturer to determine the suitability of all component parts and raw materials, including Bayer resins, used in its final product in order to ensure the safety and compliance with FDA requirements. This determination must include, as applicable, testing for suitability as an implant device and suitability as to contact with and/or storage of human tissue and liquids including, without limitation, medication, blood, or other bodily fluids. Under no circumstances may any Bayer resin be used in any cosmetic, reconstructive, or reproductive implant applications. Nor may any Bayer resin be used in any other bodily implant applications, or any applications involving contact with or storage of human tissue, blood, or other bodily fluids, for greater than 30 days, based on FDA-Modified ISO 10993, Part 1 “Biological Evaluation of Medical Devices” tests.

The suitability of a Bayer product in any given end-use environment is dependent upon various conditions including, without limitation, chemical compatibility, temperature, part design, sterilization method, residual stresses, and external loads. It is the responsibility of the manufacturer to evaluate its final product under actual end-use requirements and to adequately advise and warn purchasers and users thereof.

STERILIZATION INFORMATION

The sterilization method and the number of sterilization cycles a part made from Makrolon polycarbonate and Lustran ABS can withstand will vary depending upon the type and grade of resin, part design, and processing parameters. Therefore, the manufacturer must evaluate each application to determine the sterilization method and the number of cycles for exact end-use requirements. Parts thermoformed from Makrolon polycarbonate and Lustran ABS sheet are sterilizable using ethylene oxide, radiation, or dry heat. Steam sterilization methods must not be used with aromatic grades of Makrolon polycarbonate and Lustran ABS because possible hydrolysis of solid urethane may produce aromatic amines, such as methylene dianiline (MDA).

TECHNICAL SUPPORT

To get material selection and/or design assistance, just write or call and let us know who you are and what your needs are. So that we can respond efficiently to your inquiry, here are some of the points of information we would like to know: physical description of your part(s) and engineering drawings, if possible; material currently being used; service requirements, such as mechanical stress and/or strain, peak and continual service temperature, types of chemicals to which the part(s) may be exposed, stiffness required to support the part itself or another item, impact resistance and assembly techniques; applicable government or regulatory agency test standards; tolerances that must be held in the functioning environment of the part(s); and any other restrictive factors or pertinent information of which we should be aware.

In addition, we can provide processing assistance nationwide through a network of regional Field Technical Service Representatives. We can help customers optimize the quality and performance of their parts by offering the following types of assistance: on-site processing, equipment, and productivity audits; start-up and troubleshooting support; and tool design.

Upon request, Bayer Polymers will furnish such technical advice or assistance it deems to be appropriate in reference to your use of our products. It is expressly understood and agreed that, since all such technical advice or assistance is rendered without compensation and is based upon information believed to be reliable, the customer assumes and hereby expressly releases Bayer Polymers from all liability and obligation for any advice or assistance given or results obtained. Moreover, it is your responsibility to conduct end-use testing and to otherwise determine to your own satisfaction whether Bayer Polymers products and information are suitable for your intended uses and applications.

For assistance, call 1-800-662-2927 or visit www.BayerPolymers.com.

APPENDIX A: GLOSSARY

ABS: Acrylonitrile-butadiene-styrene terpolymer.

Absorptance: That fraction of radiant energy that is retained by the sheet.

Amorphous polymers: Polymers that exhibit a broad melting range rather than sharp melting points.

Asperities: Microscopic surface roughness.

Assists: Components of a thermoforming mold which are used to aid in forming the sheet but do not act as molds.

Bent section: A ridge designed into a formed part which unfolds somewhat to absorb most of the stress when the part is placed under tension

Biaxial orientation: Stretching of sheet in two directions.

Billow: Pre-stretching heated sheet by inflation with air pressure.

Billow chamber: A chamber over which heated plastic sheet is sealed and pre-stretched by an increase in air pressure in the chamber.

Black body: A body that emits the maximum amount of radiant energy at a given wavelength.

Bosses: Shoulders often designed into plastic parts for the purpose of allowing parts to be stacked inside each other without jamming together.

Bursting time: The time required to burst a membrane which is biaxially inflated under a known differential pressure.

Cavity mold: A cavity inside which the part is formed; often referred to as a female mold.

Chill line or chill mark: A wave-shaped surface imperfection on a formed part due to the sheet being cooled prematurely.

Combination mold: A mold which has both positive portions or ridges and cavity portions.

Computer-aided design (CAD): Computer design of part wall thickness using geometry or the Finite Element Method (FEM).

Computer-aided engineering (CAE): Computer control of the thermoforming process.

Conduction: Energy transfer by direct solid contact.

Convection: Energy transfer by moving, flowing fluids or gases.

Core mold: A core over which the part is formed; also known as a male mold.

Constrained deformation: Sheet stretching while a portion of the sheet is in contact with the mold.

Crystalline polymers: Polymers that exhibit sharp melting points.

Deformation: Stretching.

Depth of draw: The distance which the plastic sheet is pulled from its clamped position into a mold:

Draft: The taper or slope of a core or mold that facilitates removal of the part.

Drawing: The process of stretching a thermoplastic sheet to reduce its cross-sectional area.

Draw ratio: The ratio of the height of a formed part to its diameter: The method of calculating draw ratio can vary with the geometry of the part.

Enthalpy: A thermodynamic measure of the intrinsic heat content of a material.

Epoxy resin: Thermosetting plastic used for the construction of molds and other tooling.

Equilibration: Allowing a sheet to reach uniform temperature after the heating source is removed.

Female mold: A cavity-type mold.

Fillet: The curved junction formed where two surfaces meet.

Finite Element Method (FEM): A computer technique for predicting how a sheet of plastic performs under load.

Forming (temperature) range: The sheet temperature range in which any particular thermoplastic can be formed. In this range, the sheet is stretchable but not molten.

Free-blown forming: Forming which is done by air pressure without the use of a mold.

Free surface: The sheet surface not in contact with the mold surface.

Gels: Hard resinous particles in the sheet.

Glass transition temperature: The temperature range above which a brittle or tough polymer becomes rubbery.

Grey body: A body emitting a fixed fraction of the maximum amount of energy, regardless of the wavelength.

Grid or ring assists: Assists that are used for core-type molds to prevent webbing.

Heat distortion temperature: The temperature at which a plastic will just start to distort: This may be measured on test bars by standard ASTM methods under specified loads, or on formed parts under no load condition.

Heat flux: The energy incident on a surface per unit time [(Btu/ft^2)/hr].

Heat transfer: A measure of the coefficient effectiveness of energy transport between a flowing fluid and the solid surface; also known as convection heat transfer coefficient.

Hot elongation: The elongation or extensibility of a heated thermoplastic sheet. This extensibility varies widely with the material and is also greatly affected by sheet temperature, speed of stretching, and method of stretching (by differential air pressure or mechanical means).

Hot strength: The resistance of a heated thermoplastic material to being stretched or formed to the shape of the mold.

Hot tear strength: Strength of the molten sheet.

Index: To move a sheet forward a fixed distance.

In-situ trimming: In roll-fed technology, trimming that takes place while the formed sheet is still on the mold surface.

Male mold: A core-type mold.

Mechanical drawing: The stretching of a plastic sheet by mechanical devices such as molds and plugs (as opposed to stretching of the sheet by differential air pressure).

Melt temperature: The temperature range above which a polymer changes from a solid to a viscous liquid.

Mold: To shape plastic parts or finished articles by heat and pressure; the cavity or matrix into which the plastic composition is placed and from which it takes its shape.

Orientation (alignment of polymer chains): The amount of residual or frozen-in stress in a plastic sheet (usually in a given direction).

Orientation or internal strain: With a thermoplastic material, this consists of the stretching of the plastic to cause the polymer molecules to be lined up more in the direction of stretch than in other directions

Pattern heating: The practice of selectively applying gauze or screening to a sheet (usually heavy gauge) to achieve uniform heating rates.

Pin chains: Chains used to accurately feed roll-fed sheet.

Plasticized sheet: Sheet in the molten state.

Plasticizers: Materials which may be added to thermoplastics to increase toughness and flexibility or to increase the ease of processing. These materials are usually more volatile than the plastics to which they are added.

Plastic memory: The tendency of a thermoplastic material which has been stretched while hot to return to its unstretched shape when reheated.

Platens: The mounting plates of a press to which the mold assembly is bolted.

Plug assist: A mechanical device used to aid in sheet stretching prior to contact with the mold.

Polycarbonate: An amorphous thermoplastic of bisphenol A and carbonic acid.

Pressure forming: The process by which air pressure is applied to the sheet to force it against a mold.

Radiant heater: Electrical heater that heats the sheet without contacting it.

Radiation: Electromagnetic energy transfer or exchange.

Reflectance: The fraction of radiant energy that is reflected at the surface of a sheet.

Regrind: Pellets formed by grinding molded parts, sprues, runners, webbing, and/or trim as scrap for mixing with virgin resin pellets, remelting, and subsequent extrusion or injection molding.

Replication: Accurate imaging of the mold surface by the hot-formed sheet.

Roll-fed: Thin-gauge sheet, fed continuously into the thermoformer.

Sag: Deflection of molten sheet.

Sag bands: Metal support bands in continuous-sheet thermoformers that run the length of the oven to help minimize sheet sag.

Sandwich-type heaters: Heaters placed above and below the sheet.

Set temperature: The temperature below which a part can be removed from the mold without appreciable distortion.

Sonic velocity: The speed of sound for air exiting a mold cavity through vent holes.

Strain: Polymer static response to applied stress.

Stress: Externally applied load per projected area of material.

Surge tank: The tank between the vacuum pump and the mold allowing near-uniform vacuum to be applied during forming.

Syntactic foam: A mixture of sintered inorganic foam spheres and plastic foam matrix; used in plugs.

Tensile strength: The pulling stress, in psi, required to break a given specimen.

Thermal conductivity: The amount of heat in BTUs which can be conducted through one square foot of any material one inch in thickness, in one hour, with a one degree Fahrenheit temperature differential across the thickness (Btu/hr/ft^2/°F/in.).

Thermal diffusivity: A material property that indicates the rate of heat transmission.

Thermal stability: Resistance to degrading during heating and plastication.

Thermoforming: The forming of heated plastic materials into some definite shape by pneumatic and/or mechanical means.

Thermoplastics: Materials that will repeatedly soften when heated and harden when cooled.

Thermosets: Plastics that solidify when first heated under pressure and which cannot be remelted or remolded without destroying their original characteristics.

Thin-gauge: Commonly, sheet thickness less than 0.010 in (0.25 mm).

Transmittance: The amount of radiant energy transmitted by a body.

Trim: That portion of sheet that is not part of the final product.

Unidirectional orientation: Alignment of the polymer molecules in one direction much more than in any other direction.

Vacuum forming: Method of forming which uses a vacuum to pull the sheet against a mold.

Vacuum holes: The holes in the mold through which the air passes as the plastic sheet is forced against the mold.

Virgin material: Material that has not been reprocessed.

Watt density: A method of rating heater output; the watts per unit area emitted from radiant heaters.

Wavelength: A measure of the nature of incident electromagnetic radiation.

Wave number: Reciprocal (in cm) of the wavelength of infrared radiation; also known as reciprocal wavelength.

Web: A continuous sheet of plastic which is fed to a forming machine and from which formed parts may be trimmed.

Webbing: An excess fold of plastic which sometimes occurs during forming — particularly drape forming — when a fold of plastic sheet that cannot be pulled flat against a mold surface.

Yield point: The polymer stress/strain level below which plastic recovers elasticity.

APPENDIX B:
PROCESS TEMPERATURE GUIDE FOR THERMOFORMING BAYER THERMOPLASTICS

	Makrolon Polycarbonate	Lustran ABS	Centrex ASA, AES, ASA/AES	Bayblend PC/ABS Blend	Texin TPU	Cadon SMA	Triax PA/ABS Blend	Makroblend PC Blend
Target Sheet Thermoforming Temperature Limit, ˚F (˚C)	375 (190)	325 (165)	325 (165)	350-375 (180-190)	300 (150)	350-375 (180-190)	325 (165)	300 (150)
Lower Thermoforming Temperature Limit, ˚F (˚C)	350 (180)	260 (125)	260 (165)	300 (150)	250 (120)	300 (150)	325 (150)	300 (145)
Upper Thermoforming Temperature Limit, ˚F (˚C)	400 (205)	380 (195)	380 (165)	410 (210)	360 (180)	400 (205)	400 (205)	310 (155)
Maximum Sheet Temperature for Demolding, ˚F (˚C)	290 (145)	200 (95)	200 (95)	200 (95)	175 (80)	200 (95)	200 (95)	200 (95)
Mold Temperature, ˚F (˚C)	180-260 (80-125)	120-200 (50-95)	120-200 (50-95)	120-200 (50-95)	100-175 (40-80)	120-200 (50-95)	120-200 (50-95)	120-200 (50-95)
Plug Temperature ˚F (˚C)	10˚ (5˚) Lower than Sheet	250-300 (120-150)	250-300 (120-150)	250-300 (120-150)	200-225 (95-110)	250-325 (120-165)	250-300 (120-150)	225-235 (110-115)

Target Sheet Thermoforming Temperature: This is the temperature at which the sheet should be formed under normal operation. This temperature should be reached throughout the sheet and measured just before the mold and sheet come together. Shallow-draw projects with fast vacuum and/or pressure forming will allow somewhat lower sheet temperature and thus a faster cycle. Higher temperatures are required for deep draws, pre-stretching operations, and detailed molds.

Lower Thermoforming Temperature Limit: This represents the lowest temperature at which material can be formed without creating undue stresses. This means that the sheet material should touch every corner of the mold before it reaches this lower limit. Material processed below the lower limit will have greatly increased stresses and strains that later could cause warpage, lower impact strength, and/or other physical changes in the finished item.

Upper Thermoforming Temperature Limit: This is the temperature at which the thermoplastic sheet begins to degrade or at which the sheet becomes too fluid and pliable to thermoform. These temperatures normally can be exceeded only with an impairment of the material's physical properties.

Mold Temperature: High mold temperatures provide high-quality parts: better impact strength and other physical properties; minimum internal stresses; and better detail, material distribution, and optics. On the other hand, thin-gauge parts can frequently be thermoformed on molds of 35˚ to 90˚F (17˚ to 32˚C), lowering cycles greatly. The additional stresses produced are not as pronounced in the thin gauges and can usually be tolerated.

Demold Temperature: This is the temperature at which the part may be removed from the mold without warpage. Sometimes parts can be removed at higher temperatures if cooling fixtures are used. The set temperature is usually the heat distortion temperature at 66 psi (455 kPa).

APPENDIX C: LIST OF TABLES

Page No.	Description	Table No.
9	Advantages and Limitations of Thermoforming	Table 1
10	Bayer Thermoplastics Available for Thermoforming	Table 2
13	Thermoforming Techniques	Table 3
16	Recommended Vacuum Hole Diameters for Lustran ABS Sheet	Table 4
22	Design Parameters for Thermoforming Parts from Bayer Thermoplastics	Table 5
34	Recommended Drying Times for Various Sheet Thicknesses of Polycarbonate and ABS	Table 6

APPENDIX D: LIST OF FIGURES

Page No.	Description	Figure No.
7	Early Application of Plastic Thermoforming	Figure 1
8	Thermoformed Plastic Sheet in a Modern High-Performance Application	Figure 2
12	The Thermoforming Process	Figure 3
14	Multiple-Mold Layout	Figure 4
15	Wood and Aluminum Molds	Figure 5
17	Typical Temperature-Controlled Mold Construction	Figure 6
18	Heated Plug Assist	Figure 7
19	Thermoformed Part Designed with Ribbing	Figure 8
20	Location of Maximum Stress in Notched or Grooved Parts	Figure 9
20	Stress Concentration as a Function of Fillet Radius	Figure 10
21	Removable Split Ring for Thermoforming Undercuts	Figure 11
23	Sheet Drying Oven	Figure 12
24	Electrically Powered Heating Element of a Thermoformer Oven	Figure 13
25	Localized Mold Heating	Figure 14
27	Operation of a Single-Station Thermoformer	Figure 15
27	Single-Station Thermoformer	Figure 16
28	Operation of a Shuttle Thermoformer	Figure 17
28	Shuttle Thermoformer	Figure 18
29	Operation of a Rotary Thermoformer	Figure 19
29	Rotary Thermoformer	Figure 20
30	Operation of a Straight-Line, Roll-Fed Thermoformer	Figure 21
30	Operation of a Drum or Ferris Wheel Thermoformer	Figure 22
30	Roll-Fed Continuous Termoformers	Figure 23
31	In-Line Thermoformer	Figure 24
31	In-Line Extruder-Fed Drum Thermoformer	Figure 25
35	Screening to Shade Hot Spots and Control Excessive Sag	Figure 26
36	Typical Heating Times for Makrolon Polycarbonate Sheet	Figure 27
36	Typical Heating Times for Lustran Sheet	Figure 28
37	Drape Forming with a Male Mold	Figure 29
37	Drape Forming with a Female Mold	Figure 30
38	The Pressure Forming Process	Figure 31
38	Free Forming	Figure 32
39	Matched-Mold Forming	Figure 33
39	Trapped-Sheet Pressure Forming	Figure 34
40	The Twin-Sheet Forming Process	Figure 35
41	Plug-Assisted Vacuum Forming	Figure 36
41	Plug-Assisted Pressure Forming	Figure 37
42	Slip-Ring Forming	Figure 38
42	Vacuum Snap-Back Forming	Figure 39
43	Billow Snap-Back Forming	Figure 40
44	Part Cooling with a Water Mist	Figure 41
45	Steel-Rule Die-Cutting	Figure 42
45	Hand Trimming	Figure 43
46	Mechanically Fastened Thermoformed Parts	Figure 44

INDEX

A

ABS, ABS sheet, 8, 16, 17, 18, 23, 25, 32, 34, 35, 36, 41, 44, 45, 46, 47, 61, 63, 67
- adhesive systems, 46
- cooling, 44
- drying times, 34
- forming temperature, 35
- joining, 47
- mold temperatures, 25
- multiple-step forming techniques, 41
- plug temperature, 18, 25
- pre-heating, 35, 36
- regrind, 45
- sheet drying, 34
- sheet forming temperature, 18
- sterilization, 61
- thermal degradation, 36
- thermoforming temperature, 25

ABS/polyamide blends, 8
ABS/SMA terpolymers, 8
acrylic sheet materials, 7
adhesive bonding, 46
Advantages and Limitations of Thermoforming (Table 1), 9
advantages of thermoforming, 7, 9
aluminum molds, 9, 16, 25
applications, 10, 11
- automotive and transportation, 10, 11
- business machine, 11
- business machines, 10
- consumer, 10, 11
- electrical/electronic, 10
- industrial/mechanical, 10
- medical, 11
- specialty transportation, 11

area heating, 36
automatic thermoformers, 26
automotive and transportation applications, 10, 11

B

Bayblend polycarbonate/ABS Blend, 10, 47, 67
Bayer thermoplastic resins, 7, 8, 10, 33
Bayer thermoplastic sheet, 47, 60, 61
- regulatory status, 61

Bayer Thermoplastics Available for Thermoforming (Table 2), 10
biaxial orientation, 63
billow, 19, 26, 38, 39, 41, 42, 43, 54, 55, 57, 58, 59, 63. *See also* pre-stretching
- billow or bubble forming, 38
- pre-draw, 19
- pre-heating air, 26
- pre-stretch, 59
- slip-ring forming, 42
- snap-back forming, 41, 43, 55
- temperature, 58

billow snap-back forming, 41, 43, 55
Billow Snap-Back Forming (Figure 40), 43
blow pin, 40
blow plate, 39
blush, 52
bosses, 22, 63
bridging, 14, 54
brittle parts, 48
bubbles, bubble formation, 23, 34, 48
business machine applications, 10, 11

C

Cadon SMA, 11, 67
cam-actuated plugs, 17
cast phenolic molds, 15
cavity mold, 63
cellulosic sheet materials, 7
Centrex ASA, AES, ASA/AES, 11, 32, 67
chill marks, 22, 25, 42, 44, 53, 63
circulating air oven, 23, 34
clamp, clamping frame, 13, 22, 23, 40, 44, 50, 58
clamp, clamping pressure, 26, 55
coefficient of expansion
- linear expansion, 22
- thermal expansion, 21, 22

coextruded sheet, 9, 32
color, 10, 32, 34, 45, 47, 52
- stability, 10
- loss of, 52

combination mold, 63
consumer applications, 10, 11
Consumer Product Safety Commission (CPSC), 61
contamination, contaminated sheet, 33, 45, 51
continuous thermoformer, 30
cooling, 12, 18, 21, 23, 25, 26, 27, 29, 30, 44, 48, 49, 54, 56, 57, 59, 67
cooling and part removal, 44
cooling cycle, 21, 49, 56, 57
cooling rate, 59
cooling time, 29
core mold, 63
corner radii, 20
corner ribs, 22
cost
- equipment, 7, 9
- labor, 9
- material, 8, 9, 19, 32
- thermoforming, 9
- tooling, 15, 16, 39

CPSC (Consumer Product Safety Commission), 61
cracking, 11, 22, 33, 59
crazing, 22, 48
curves, 22
cut-sheet feedstock, 32
cut-sheet thermoformers, 27
cutting and handling equipment, 45
cycle time(s), 9, 17, 44, 56

D

decals, 47
decorating, 13
deflection temperature, 22
demold temperature, 25, 44, 67
demolding, See part removal
depth of draw, 19, 22, 52, 63
depth-to-diameter draw ratio, 14, 37
depth-to-width ratios, 19
design assistance, 62
Design Parameters for Thermoforming Parts from Bayer Thermoplastics (Table 5), 22
detail, 9, 12, 14, 16, 19, 22, 26, 37, 38, 39, 42, 59, 67
die pressure (matched mold forming), 59
differential drawing, 32
dimensional accuracy, 14, 39
dimensional control, 38
dimensional stability, 7, 10, 11, 15
dimensional tolerances, 26
dimpling, 17
dirt, 33, 36
dirty mold, 53
dirty sheet, 53
distortion, 44, 57
draft, 54, 63
draft angle, 21, 22, 51
draft, mold, 16
drape forming
  with a female mold, 13, 37
  with a male mold, 13, 19, 21, 37
Drape Forming with a Female Mold (Figure 30), 37
Drape Forming with a Male Mold (Figure 29), 37
drape speed, 54, 57, 59
draw, 19, 22, 26, 32, 43, 52, 55, 57, 59
draw ratio, 14, 37, 41, 50, 54, 59, 63
drum or ferris wheel thermoformer, 30, 69
dryability, sheet, 22
drying sheet, 23, 33
drying station, 23
drying times
  ABS sheet, 34
  polycarbonate sheet, 34
Drying Times for Various Sheet Thicknesses of Polycarbonate and ABS, Recommended (Table 6), 34

E

Early Application of Plastic Thermoforming (Figure 1), 7
ejection pressure, 57
ejection systems, 12, 44
electrical heaters, 25
electrical/electronic applications, 10
Electrically Powered Heating Element of a Thermoformer Oven (Figure 13), 24
electroformed metal molds, 16
elongation, 22, 33, 35
embossing depth, 59
embossing detail, 59
EMI (electromagnetic interference) shielding, 47
epoxy molds, 9, 15
equipment, 9, 14, 23, 24, 26, 29, 36, 45, 46
  cutting and handling, 45
  finishing, 23
  sheet clamping and transfer, 26
  sheet drying, 23
  sheet heating (pre-heating), 24
  thermoforming, 23
  trimming and cutting, 9, 13, 23
equipment capabilities, 19, 22
  clamp frame size, 22
  clearance for part removal, 22
  heating capacity and pattern control, 22
  part handling, 22
  plug force and speed, 22
  vacuum or pressure available, 22
extruded sheet, 9, 32, 33
extruded sheet properties
  elongation, 33
  modulus of elasticity, 33
  tensile strength, 33
  tensile stress, 33
extruder-fed feedstock, 32

F

fastening, 45, 46
fatigue performance, 10
FDA (Food and Drug Administration), 61
feedstock
  cut sheet, 32
  extruder-fed, 32
  film, 32
  foam-core sheet, 32
  rolled sheet, 32
female mold, 12, 13, 14, 37, 38, 39, 40, 41, 54, 57, 63, 64
Figures, List of (Appendix D), 69
fillet(s), 20, 59, 64
finished part requirements, 19, 22
finishing, 13, 23
finishing equipment, 23
foam-core sheet, 32
Food and Drug Administration (FDA), 61
forming cycle, 12, 24
forming equipment, 9, 26, 29
forming pressure, 56
forming station, 23
forming techniques
  multiple-step, 41
  single-step, 37
forming temperature, 12, 18, 24, 27, 28, 29, 31, 35, 36, 40, 49, 59
  ABS sheet, 35
  polycarbonate sheet, 35
frame assist, 50
free forming, 13, 37, 38, 39
Free Forming (Figure 32), 38

G

gauge uniformity, 22, 32
gels, 64
gloss, excess, 49
Glossary (Appendix A), 63
grained surface, 14, 39

H

Hand Trimming (Figure 43), 45
hardwood plug, 18
health and safety precautions, 60
heat transfers, 47
Heated Plug Assist (Figure 7), 18
heater temperature, 48, 49, 50, 51, 52, 53, 54, 56, 58, 59
heating cycle, 19, 24, 44, 49, 51, 52, 53, 54, 56, 58, 59
heating equipment, 22, 24, 36
heating pattern control, 22
heating time, 29, 36, 50, 55
  ABS sheet, 36
  polycarbonate sheet, 36
  Typical Heating Times for Lustran ABS Sheet (Figure 28), 36
  Typical Heating Times for Makrolon Polycarbonate Sheet (Figure 27), 36
heating uniformity, 50
history of thermoforming, 7
hot elongation, 35
hot melt strength, 22
hot stamping, 47
hot tear strength, 35

I

ignition, 24
impact resistance, 10, 33, 39
impact strength, 7, 8, 10, 11, 46, 47, 67
improperly dried sheet
  bubbles, 23
  reduction in physical properties, 23
incomplete forming of part, 50
industrial hygiene, 60
industrial/mechanical applications, 10
infrared heaters, 24
In-Line Extruder-Fed Drum Thermoformer (Figure 25), 31
in-line forming, 9
in-line thermoformer, 31, 69
In-Line Thermoformer (Figure 24), 31
inserts, 22
inside detail, 19

J

joining, 13, 45-47
joining techniques
  adhesive bonding, 46
  mechanical fastening, 46
  press and snap fits, 46
  solvent bonding, 46
  ultrasonic bonding, 47
Joining Techniques and Snap-Fit Joints in Plastics, A Guide for, 45
joint strength, 46

L

labeling, 47
  decals, 47
  heat transfers, 47
  hot stamping, 47
  gummed or self-adhesive, labels, 47
labor costs, 9
lacquering, 47
laminated sheet, 9, 32
laser printing, 47
layout, 22
lettering, 14, 22, 38, 39
linear expansion, 22
localized mold heating, 25
Localized Mold Heating (Figure 14), 25
localized thinning, 33
Location of Maximum Stress in Notched or Grooved Parts (Figure 9), 20
low-profile parts, 38
Lustran ABS, 11, 16, 32, 35, 36, 44, 47, 61, 67, 68
Lustran ABS sheet
  forming temperature, 35
  mold design, 16
  multiple-step forming, 41
  thermal degradation, 36
  vacuum hole diameters, 16, 17

M

Makroblend PC blends, 10, 67
Makrolon polycarbonate, 10, 17, 35, 36, 39, 41, 44, 47, 67, 69
Makrolon polycarbonate sheet
  multiple-step forming, 41
  thermal degradation, 36
  vacuum hole diameter, 17
male drape forming, 19, 21
male mold, 12, 13, 14, 18, 37, 38, 39, 40, 42, 43, 44, 63, 64
mark-off, mold, 25, 51, 53
marks, 36, 38, 53, 56
matched-mold forming, 12, 13, 14, 39
Matched-Mold Forming (Figure 33), 39
matched-mold tooling, 9
material cost, 9, 19, 32
material distribution, 19, 22, 25, 31, 41, 42, 49, 57, 58, 67
material heating (pre-heating), 34, 35-36, 48
material pre-drying, 23, 34, 48
Material Safety Data Sheet (MSDS), 46, 47, 60
material selection assistance, 62
mechanical fastening, 46
mechanical stress, 20
Mechanically Fastened Thermoformed Parts (Figure 44), 46

medical applications, 11
medical grade information, 61
melt strength, 54
metallizing, 47
methods of thermoforming
  multiple-step, 13
  single-step, 13
modulus of elasticity, 22, 33
moisture, 32, 33, 34, 48
  affect on color, 34
  affect on control of thermoforming parameters, 34
  affect on physical properties, 34
  bubble formation, 34
  drying sheet, 33
  localized thinning, 33
  surface defects, 33
mold, 9, 12, 13, 14-18, 19, 20, 21, 22, 23, 25, 26, 27, 28, 29, 36, 37, 38, 39, 40, 41, 42, 43, 44, 48, 49, 51, 52, 53, 54, 55, 56, 57, 63, 67
  assists, 17
  cavity, 14, 39
  contamination, 53
  coolant, 56
  cooling, 16, 48
  cost, 16
  cycle, 16, 67
  dimensional stability, 15
  draft, 16, 52, 53, 54, 57
  durability, 16
  female, 13
  heating controls, 23
  layout, 14, 54
  lubricant, 48, 51
  male, 13
  mark-off, 51
  thermal conductivity, 25
Mold Construction, Typical Temperature-Controlled, (Figure 6), 17
mold design, 14-18
  collapsible core, 17
  draft, 16
  factors to consider, 14
  Lustran ABS sheet, 16
  mold materials, 14
  part geometry, 17, 42
  part removal, 17, 44
  pressure forming, 16
  radii, 16
  split body, 17
  thermoforming method, 16
  undercuts, 16, 17
  vacuum holes, 16, 17
mold detail, 14, 16, 37, 39
  grained surfaces, 39
  lettering, 39
mold heating, 16, 25, 55
  cartridge-type electrical heaters, 25
  localized, 25
mold mark-off, 25, 51, 53
mold materials, 14, 15-16, 56
  aluminum molds, 9, 15, 16, 25
  cast phenolic, 15
  cost, 15
  durability, 15, 16
  electroformed metal, 16
  for experimental thermoforming, 15
  for large-volume production, 15
  for long production runs, 15
  for medium runs, 15
  for prototyping, 15
  for short runs, 15
  heat conductivity, 15, 16
  metal, 15
  plaster molds, 15,
  plastic molds, 16, 25
  properties and characteristics, 15
  sprayed metal molds, 16
  steel molds, 16
  surface finish, 15
  temperature control, 15
  wear resistance, 15
  wood molds, 15
mold orientation, 16
mold preheating, 25
mold pressure, 9
mold radii, 53, 54
mold release, 57, 58
mold shrinkage, 20, 21
mold spacing, multiple mold layout, 14
mold strength, 15
mold surface, 16, 19, 37, 38, 42, 51, 53, 56, 57
mold temperature, 25, 44, 48, 49, 51, 52, 53, 54, 55, 56, 57, 59, 67
  for ABS, 25
  for polycarbonate, 25
  for thin-gauge parts, 67
mold temperature control, 25
mold types
  female molds, 14
  male molds, 14
  matched molds, 14
mold undercuts, 21, 57
molded-in stress, 9, 25
MSDS (Material Safety Data Sheet), 46, 47, 60
multi-cavity molds, 9
multiple parts, 22
multiple-mold layout, 14
Multiple-Mold Layout (Figure 4), 14
multiple-step forming techniques, 13, 41
  billow snap-back forming, 41, 43
  plug-assisted pressure forming, 13, 41, 42
  plug-assisted vacuum forming, 13, 41
  slip-ring forming, 13, 41, 42
  vacuum snap-back forming, 13, 41, 42

N

National Science Foundation (NSF), 61
nipples, 53
non-uniform drape, 50
NSF (National Science Foundation), 61

O

offset printing, 47
openings, 22
Operation of a Drum or Ferris Wheel Thermoformer (Figure 22), 30
Operation of a Rotary Thermoformer (Figure 19), 29
Operation of a Shuttle Thermoformer (Figure 17), 28
Operation of a Single-Station Thermoformer (Figure 15), 27
Operation of a Straight-Line Roll-Fed Thermoformer (Figure 21), 30
optical distortion, 38
optical properties, 22
orientation (internal strain), 32
output rate, 32
outside detail, 19
oven, 23
  circulating air, 23
  convection, 24
  sheet drying, 23
  size and capacity, 23
  temperature, 35, 36
  thermoformer (pre-heating), 23, 24
overheated part, 48, 49
over-stretching, 22

P

packaging, 9
painting, 47
part cooling, 12, 44, 49
  Lustran ABS, 44
  Makrolon polycarbonate, 44
  plastic molds, 44
  thick walls, 44
  wood molds, 44
Part Cooling with a Water Mist (Figure 41), 44
part cracking, 59
part definition, 38
part design, 9, 14, 19, 20, 21, 22, 29, 32, 49, 59, 63
  bosses, 22, 63
  changes, cost of, 9
  costs, 9
  dimensions, 9, 21, 32
  elasticity, 22
  equipment capabilities, 19
  fillets, 20
  finished part requirements, 19
  material characteristics, 19
  reproducing detail, 19
  ribbing, 19
  shrinkage, 20, 21
  stress concentration, 20
  thermoforming technique, 19
part distortion, 56, 57
part ejection
  automatic, 12
  manual, 12
part failure, 22
part geometry, 17, 42
part handling, 22
part layout, 22
part removal, 12, 17, 22, 44, 57
part service life, 20
part shrinkage, 25, 56
part strength, 20
part temperature, 57
part thickness, 19, 32, 36
part tolerances, 21
pattern heating, 48, 54, 55, 57, 59, 65
personal protective equipment, 46, 47
physical properties, 23, 24, 25, 34, 67
physical testing, 8
plaster molds, 15
plastic molds, 16, 17, 44
plug, plug assists, 12, 14, 17-18, 19, 23, 25, 27, 41, 42, 43, 49, 50, 51, 52, 53, 54, 57, 58, 59, 65
  cam-actuated, 17
  for experimental or short runs, 18
  heating controls, 23
  thermal conductivity, 17
plug design
  friction, 17
  material, 18
  mold shape, 17
  surface, 17
plug force, 22
plug speed, 22
plug surface, 17
plug temperature, 18, 25, 52, 53, 58, 67
plug travel, 23
plug-assisted pressure forming, 13, 41, 42
Plug-Assisted Pressure Forming (Figure 37), 41
plug-assisted pre-stretching, 41
plug-assisted vacuum forming, 13, 41
Plug-Assisted Vacuum Forming (Figure 36), 41
polishing, 13
polycarbonate, polycarbonate sheet, 8, 13, 17, 23, 25, 34, 35, 36, 39, 41, 44, 45, 46, 47
  drying, 23
  drying times, 34
  forming temperature, 35
  free-blowing, 13
  regrind, 45
polycarbonate/ABS blend, polycarbonate/ABS blend sheet, 8, 10, 23, 47, 67
polycarbonate/polyester blends, 8
poor detail, 50
poor embossing detail, 59

post-forming, 12, 13, 45
adding holes or vents, 45
cutting out the part, 45
joining or fastening, 13, 45
polishing, 13
printing and decorating, 13
sanding, 13
trimming, 13, 45
pre-drying, 23, 34, 48
pre-heating, 34, 35, 36, 48
heavy sheet, 36
thin film, 36
press and snap fits, 46
pressure assist, 50
pressure box, 43
pressure forming, 9, 13, 16, 26, 37, 38, 41, 42, 56, 65
cycle times, 9
detail, 9
mold design, 16
mold pressure, 9
Pressure Forming Process, The (Figure 31), 38
pre-stretching, 12, 13, 14, 17, 18, 37, 41, 42, 49, 58, 59, 63, 67
printing and decorating, 13, 47
Process Temperature Guide for Thermoforming Bayer Thermoplastics (Appendix B), 67
product information bulletins, 61
product labels, 46, 47, 60
production cycle, 35, 38
production molds/tooling, 9, 25
production trials, 8
profile heating, 36
properties, 10, 19, 22, 23, 24, 25, 32, 33, 34, 35
electrical, 10
elongation, 35
sheet, 32
tear strength, 35
prototype forming, 35
prototype mold materials, 15
prototype parts, 9
prototype tooling, 25
punching and stamping, 45

R

radiant heaters, 24
radii, 16, 52, 54
regrind, 22, 30, 33, 45, 46, 51, 52, 59, 61, 65
ABS sheet, 45
polycarbonate sheet, 45
regulatory compliance, 61
Removable Split Ring for Thermoforming Undercuts (Figure 11), 21
removable split rings, 21
removal, part, 12
reproducing detail
inside detail, 19
outside detail, 19
residual stress, 22
ribbing, 19
rigidity, 10, 11, 16, 19, 32
ring assists, 14, 17, 18, 54
rod assists, 14
roll feedstock, 23, 32
Roll-Fed Continuous Thermoformers (Figure 23), 30
roll-fed continuous thermoformer, 30
rotary thermoformer, 29
Rotary Thermoformer (Figure 20), 29
rotogravure printing, 47

S

safety, 46, 47, 60
sag, 24, 35, 36, 55, 59, 65
scorching, scorched sheet, 51
scrap, 13, 14, 22, 32, 45
scratches, 13, 51
Screening to Shade Hot Spots and Control Excessive Sag (Figure 26), 35
secondary operations, 8
set temperature, 67
set-up time, 22
shapes, 22
sheet
coextruded, 32
contamination, 53
foam-core, 32
laminated, 32
materials, 7
sag, 35, 36, 59
sticking, 58
surface temperature, 36
temperature, 16, 18, 35, 52, 53, 54, 55, 56, 57, 58, 59
thermal degradation, 36
sheet clamping and transfer equipment, 26
sheet drying equipment, 23, 34
Sheet Drying Oven (Figure 12), 23
sheet gauge, 17, 32, 49, 52, 55, 57, 58, 59
sheet gauge uniformity, 32
sheet heating, 48, 49, 50, 52, 55, 59
sheet pre-drying and pre-heating, 34
sheet properties, 32, 33, 35
elongation, 35
impact resistance, 33
modulus of elasticity, 33
tear strength, 35
tensile stress, 33
toughness, 33
sheet thermoforming temperature, 67
sheet thickness, 19, 23, 24
sheet-fed stock, 23
sheet-fed thermoformers, 27
short-run tooling, 25
shrink marks, 56
shrinkage, 20-21, 25, 32, 44, 56
after-mold shrinkage, 20, 21
in-service shrinkage and expansion, 20
mold shrinkage, 20

shuttle thermoformer, 28, 29
Shuttle Thermoformer (Figure 18), 28
silk screening, 47
single-mold thermoformer, 28
Single-Station Thermoformer (Figure 16), 27
single-station thermoformers, 27
single-step thermoforming, 13, 37
  drape forming with a female mold, 13, 37
  drape forming with a male mold, 13, 37
  free forming, 13, 37
  matched-mold forming, 13, 37
  pressure forming, 13, 37
  trapped-sheet pressure forming, 13, 37
  twin-sheet pressure forming, 13, 37
slip-ring forming, 13, 41, 42
Slip-Ring Forming (Figure 38), 42
snap-back forming, 55
solvent bonding, 46
specialty coatings, 47
specialty transportation applications, 11
sprayed metal molds, 16
static electrical charge, 33
steel molds, 16
Steel-Rule Cutting Die (Figure 42), 45
sterilization, 61
  Lustran ABS, 61
  Makrolon polycarbonate, 61
sticking, 57
straight vacuum female forming, 19
straight vacuum forming, 13, 21, 37
straight-line, roll-fed thermoformer, 30
streaks, 56
strength, 11, 20, 46, 47
stress, 9, 20, 22, 25, 44, 46, 63
stress concentration, 20, 59
Stress Concentration as a Function of Fillet Radius (Figure 10), 20
stress distribution, 20
surface appearance, 11, 47
surface contamination, 33
surface defects, 33
surface detail, 22
surface finish, 15, 16, 38, 44, 51
surface roughness, 36, 63
surface temperature, 36
surface texture, 38
surge tank, 26

T

Tables, List of (Appendix C), 68
tear strength, 11, 35
tearing, 58
technical advice and assistance, 8, 62
temperature control, 15, 25, 55
tensile elongation, 22
tensile strength, 11, 66
tensile stress, 33
Texin TPU, 11, 67
texture, 22, 38, 47, 49
texture washout, 49
thermal conductivity, 17, 25, 66
  mold, 25
  plug, 17
thermal degradation, 36, 67
  Lustran ABS sheet, 36
  Makrolon polycarbonate sheet, 36
thermal expansion, 21, 22
thermal resistance, 8, 10
thermal shrinkage, 44
thermal stability, 10
Thermoformed Part Design with Ribbing (Figure 8), 19
Thermoformed Plastic Sheet in a Modern High-Performance Application (Figure 2), 8
thermoformers
  automatic, 26
  continuous, 30
  cut-sheet, 27
  drum or ferris wheel, 30
  in-line, 31
  rotary, 29
  sheet-fed, 27
  shuttle, 28
  single-mold, 28
  single-station, 27
  straight-line, roll-fed, 30
  web- or roll-fed, 30
thermoformer oven, 23, 24
thermoformer platen, 16
thermoforming equipment, 9, 23, 26, 27, 28, 29
thermoforming method, 13, 16
thermoforming process, 12, 13, 23, 31
  forming cycle, 12
  methods of thermoforming, 13
Thermoforming Process, The, (Figure 3), 12
thermoforming technique, 19
  depth of draw, 19
  part design, 19
  part shrinkage, 20
  reproducing detail, 19
  ribbing, 19
Thermoforming Techniques (Table 3), 13
thermoforming temperature, 67
thermoforming, history of, 7
thermoplastic polyurethanes, 8
thickness, 22, 32, 68
thin sheet, 23, 32
thin-gauge parts, 67
  mold temperature, 67
thin-gauge sheet, 19
thinning, 33, 37, 38, 41, 55
timing controls, 23
  cooling, 23
  heating, 23
  plug travel, 23
tolerances, 31, 32, 39
tooling, 9, 12, 25, 39
  costs, 39
  matched tooling, 9
  production, 25

prototype, 25
short-run, 25
toughness, 11, 32, 33
transparency, 8, 10, 38
trapped-sheet pressure forming, 13, 37, 39
Trapped-Sheet Pressure Forming (Figure 34), 39
Triax alloys, 67
Triax Polyamide/ABS blend, 10
trim, 9, 14
reclamation, 9
trimming, 13, 23, 29, 30, 44, 45, 69
trimming and cutting tools, 9, 13, 23
twin-sheet pressure forming, 13, 37, 40
Twin-Sheet Forming Process, The, (Figure 35), 40

U

ultrasonic bonding, 47
undercuts, 16, 17, 21, 22, 57, 69
uneven heating, 25, 58
uneven part cooling, 49
uneven sheet heating, 48, 49, 50
uneven wall thickness, 25
uniaxial orientation, 32
uniform draw, 14, 43
uniform mold temperature, 44
United States Dairy Association (USDA), 61
USDA (United States Dairy Association), 61
UV exposure, 32

V

vacuum, 13, 19, 21, 22, 23, 26, 27, 37, 38, 39, 40, 41, 50, 51, 54, 56
vacuum box, 26, 43, 54, 58
vacuum draw rate, 52
vacuum forming, 9, 13, 15, 21, 26, 37, 38, 41, 66
vacuum hole diameter
Lustran ABS sheet, 16, 17
Makrolon polycarbonate sheet, 17
Vacuum Hole Diameters for Lustran ABS Sheet, Recommended (Table 4), 16
vacuum holes, 16, 17, 49, 50, 51, 53, 54, 56, 66
clogged, 50, 54, 56
location, 50
Lustran ABS sheet, 16
Makrolon polycarbonate sheet, 17
mold design, 17
number, 50
part geometry, 17
size, 17, 50, 54, 56
vacuum metallizing, 47
vacuum pumps, 26
vacuum rate, 53
vacuum slits/slots, 17, 50
vacuum snap-back forming, 13, 41, 42, 43
Vacuum Snap-Back Forming (Figure 39), 42
vacuum surge tank, 56
vibration dampening, 11
vinyl sheet materials, 7
voids, 48

W

wall thickness, 9, 14, 16, 19, 20, 25, 36, 37, 39, 41, 42, 43, 55
female mold, 14
male mold, 14
precision, 9
radii, 16
uneven, 25
variation, 25
warping, warped parts, 22, 23, 34, 44, 49, 67
waste, 13
weatherability, 11
weatherable polymers, 8
webbing, 14, 18, 22, 54, 66
web-fed thermoformer, 30
whitening, 59
wood mold, 9, 15, 25, 44, 57
Wood Molds (Figure 5), 15
wood plug/plug assist, 18, 58
wrinkling, 54

Bayer Polymers

Bayer Polymers LLC • 100 Bayer Road • Pittsburgh, PA 15205-9741 • 1-800-662-2927
www.BayerPolymers.com

The manner in which you use and the purpose to which you put and utilize our products, technical assistance, and information (whether verbal, written, or by way of production evaluations), including any suggested formulations and recommendations are beyond our control. Therefore, it is imperative that you test our products, technical assistance, and information to determine to your own satisfaction whether they are suitable for your intended uses and applications. This application-specific analysis must at least include testing to determine suitability from a technical as well as health, safety, and environmental standpoint. Such testing has not necessarily been done by us. Unless we otherwise agree in writing, all products are sold strictly pursuant to the terms of our standard conditions of sale. All information and technical assistance is given without warranty or guarantee and is subject to change without notice. It is expressly understood and agreed that you assume and hereby expressly release us from all liability, in tort, contract, or otherwise, incurred in connection with the use of our products, technical assistance, and information. Any statement or recommendation not contained herein is unauthorized and shall not bind us. Nothing herein shall be construed as a recommendation to use any product in conflict with patents covering any material or its use. No license is implied or in fact granted under the claims of any patent.

Printed on recycled paper KU-F7011 © 2003 Bayer Polymers LLC — Printed in U.S.A. 645 (1) 9/03