opportunity to seize high-value archaeological returns through well-managed partnership, setting ambitious but pragmatic and deliverable goals. The public has its prize!

David Strachan
Perth & Kinross Heritage Trust, York Place, Perth PH2 8EP (led the excavation and recovery)

Theo Skinner
National Museums Scotland, Edinburgh
(carried out the conservation work)

Mark A Hall
Perth Museum and Art Gallery, George Street, Perth PH1 5LB (co-ordinated the display of the vessel)

Acknowledgements

The authors would like to thank their colleagues at Perth & Kinross Heritage Trust, National Museums Scotland Conservation and Analytical Research Laboratory, Granton, Edinburgh, and Perth Museum and Art Gallery. Also the archaeological contractor CFA Archaeology, the marine salvage contractor, Mooring & Maritime Services, T. G. McDonald Engineering Ltd, for transport, and Scott McGuckin, whose act of reporting the logboat find set this whole project in motion.

References

Cowie, T. and Hall, M. A., 2010, A New Look At The Late Bronze Age Metalwork From The Tay, in D. Strachan, *Carpow in Context: A Late Bronze Age Logboat from the River* Tay, 151–60. Edinburgh.

Cowie, T., Hall, M. A., Northover, P., and O'Connor, B., 2011, A Middle Bronze Age dirk from the River Tay at Friarton, Perth, *Tayside and Fife Archaeological Journal* **17**, 10–18.

Strachan, D., 2010a, *Carpow in Context: A Late Bronze Age Logboat from the River Tay.* Society of Antiquaries of Scotland, Edinburgh.

Strachan, D., 2010b, *The Carpow Logboat: A Bronze Age vessel brought to life.* Perth and Kinross Heritage Trust, Perth.

The Anchor of the 3rd-Century-BC Ship from Kyrenia, Cyprus: a one-armed wooden anchor with a lead-filled stock

Since its excavation in the late 1960s, the Kyrenia ship has become a seminal component of the corpus of archaeological evidence related to late-Classical and early-Hellenistic Greek seafaring in the Eastern Mediterranean. The ship sank north-east of the town of Kyrenia, Cyprus, in the early-3rd century BC, *c*.295–285 (Katzev, 2005: 72). The remains of the ship itself, built some time between 315 and 305 BC, include *c*.75% of the structural members, along with elements of its rigging and sail, and fragments of a one-armed wooden anchor with a lead-filled stock.

The ship's four lead anchor-stock cores have been published previously as two sets of cores from two different anchors (Kapitän, 1973: 384; Haldane, 1984: 7). Recent study, however, has demonstrated that the cores are, in fact, from a single wooden anchor (Fig. 1) (the discovery that the four lead pieces make up a single core must be credited to Robin Piercy, a member of the original excavation team, who successfully reconstructed the anchor-stock core in 2005). The cores were connected and, therefore, can be assigned to Type IIb in Kapitän's typology for wooden anchors (1984: 37, fig. 4.2b). (Trethewey (2001: 1) and others typically refer to this typology as Haldane's (1984: 3–4; 1990: 21), but Haldane based his study, in particular his MA dissertation, on the seminal work of Gerhard

Figure 1. Kyrenia Type IIb lead anchor-stock core. Top left to bottom: Pb 19 and Pb 21, top right to bottom: Pb 20 and Pb 22. (Mustafa Erkan and Kadir Kaba)

© 2012 The Authors. International Journal of Nautical Archaeology © 2012 The Nautical Archaeology Society

Kapitän (1973; 1984: 37). This author, therefore, considers it more appropriate to credit the typology to Kapitän. This makes the Kyrenia anchor the only example of its kind associated with a shipwreck; all other remains of this particular type of anchor come from undated contexts. Anchors of this type have been found off the coast of Thracia Pontica at Sozopol (Dimitrov, 1979: 75) and in Sicily (Kapitän, 1969; 1980: 46–7). The Kyrenia ship's anchor demonstrates that Type IIb already existed *c*.300 BC, thereby advancing the date of its introduction by at least half a century from that proposed by Haldane (250–150 BC) (1984: 7).

The anchor-remains

Jeremy Green conducted a metal-detector and magnetometer survey of the site in 1967 and discovered the four lead cores and a single iron anchor-tooth just forward of the main wreckage, only *c*.1.4–2.9 m away from the ship's preserved bow-structure (Green *et al.*, 1967: 47–56) (Fig. 2). The anchor-tooth was located within 1.5 m of the cores, providing an indication of the original size of the anchor (Fig. 3). Its find-location suggests that the anchor was probably still stowed near or on the ship's bow at the time of sinking. It must have settled into the sediment near its original position, since the weight and shape of the anchor-stock cores are such as would preclude them from moving any distance over the sea-bed.

The Kyrenia anchor is unique among all known Type II examples in that it has a relatively high stock-core consisting of two fillings each side. Anchor-stock fillings Pb 19 and Pb 21 formed one side of the stock-core, while Pb 20 and Pb 22 formed the other side. The two mould- or core-sides were joined through the wooden shank by a 9-cm-long lead connection (Fig. 1). Samples extracted from the various parts of the Kyrenia anchor-stock core were sent to the Geochemistry Laboratory at the University of Melbourne for lead-isotope analyses. Comparison of the lead-isotope data with the Oxalid database reveals that they are consistent with the ores of the Kamareza or Plaka mines in Laurion, Attica (Table 1). At the time when the Kyrenia ship was sailing Aegean waters, the Laurion silver mines in Attica were the primary source for lead, a by-product of their silver production.

The four anchor-stock core-fillings have a maximum length of 720 mm, maximum height of 162 mm, and maximum width of 92 mm. The complete core weighs 67.4 kg, but the weight is distributed unevenly, 28.3 kg on one side of the anchor's shank and 39.1 kg on the other (Table 2). Core-filling Pb 19 [YB] is asymmetrical and has a rectangular and wedged shape. There is a small, rectangular notch at one end of its casting surface where originally the corresponding projection in filling Pb 20 [ZD] joined. Filling Pb 20 [ZD] is trapezoidal in section and slightly lopsided. It has a projection at one end 9 cm long, 39 mm wide, and 44 tapering to 23 mm high, which functioned as the bridge connecting the two sides of the anchor-stock core. Filling Pb 21 [YC] is rectangular and has a trapezoidal section. There is a cap preserved along its narrow long side, indicating that the molten lead spilled over the top of the anchor-stock, or mould, during the casting process.

The fourth filling, Pb 22 [ZE], is rectangular, with a trapezoidal section, and has a cap of lead preserved along its narrow long edge. It originally had four copper nails functioning as casting-bolts. The length of the copper nails indicates that the thickness of the anchor-stock's wooden casing ranged from 22 to 37 mm. Three of the nails are still present in the lead filling, while the fourth nail broke off as a result of post-depositional processes on the wreck-site (Figs 1, 4–5), and was found near the anchor-remains and recovered during excavation (XY) (Fig. 5). The embedded shaft-end of this nail is still visible at the lower long side of the mould surface.

The copper nails originally had domed, circular heads and their shafts were round in section, at least immediately beneath the heads. They are similar in shape to the spare nails found in the Kyrenia ship's after cabin, as well as to those used in its construction, such as the double-clenched nails which fastened the ship's frames to the hull-planking. A semi-quantitative chemical analysis of the four nails shows that their copper purity varies between 97.91% and 99.12% (Table 3). The concentrations of natural trace-elements found in the copper, such as arsenic, iron, lead, nickel, and zinc, were generally found to be less than 1%. Core-filling Pb 22 is the only one with copper nails; Pb 20, and Pb 19 and Pb 21, from the other side of the anchor-stock core, display no evidence of nails or casting-bolts. The mould surfaces of the Kyrenia anchor-stock cores are very rough. Cut-marks from a chisel, measuring between 25 and 31 mm wide, and wood-splinters from the stock casing, are still visible on the mould surfaces. The central sections of the long sides of the cores are slightly recessed, up to 3 mm deep (Fig. 1).

In addition to the lead-stock cores, archaeologists recovered the ferrous concretion of an anchor-tooth, or fluke-point (Figs 6–8, Fe 43). This concretion was sawn open with the intention of casting the iron object within. However, it still contained the wood of the anchor's tooth, and it was therefore left intact and a reconstruction drawing was made from it. The wooden tip of the fluke, now iron-permeated, was protected by a metal cone, delicately fashioned from sheet-iron (Fig. 8), which originally measured 264 mm long. The cone had a U-shaped flange 100 × 125 mm wide and 3–4 mm thick, which covered the tip of the anchor's tooth. A blunted, rectangular tip protruded *c*.62 mm from the flange and had a width of 30 mm and a thickness of 20 mm tapering to 5 mm at the blunt end. The custom-fitted iron cone was fastened to the tooth with a 32-mm-long copper tack. This had a square shaft with a maximum width of 9 mm, which tapered to a point, and a circular head 16 mm in diameter.

 © 2012 The Authors. International Journal of Nautical Archaeology © 2012 The Nautical Archaeology Society

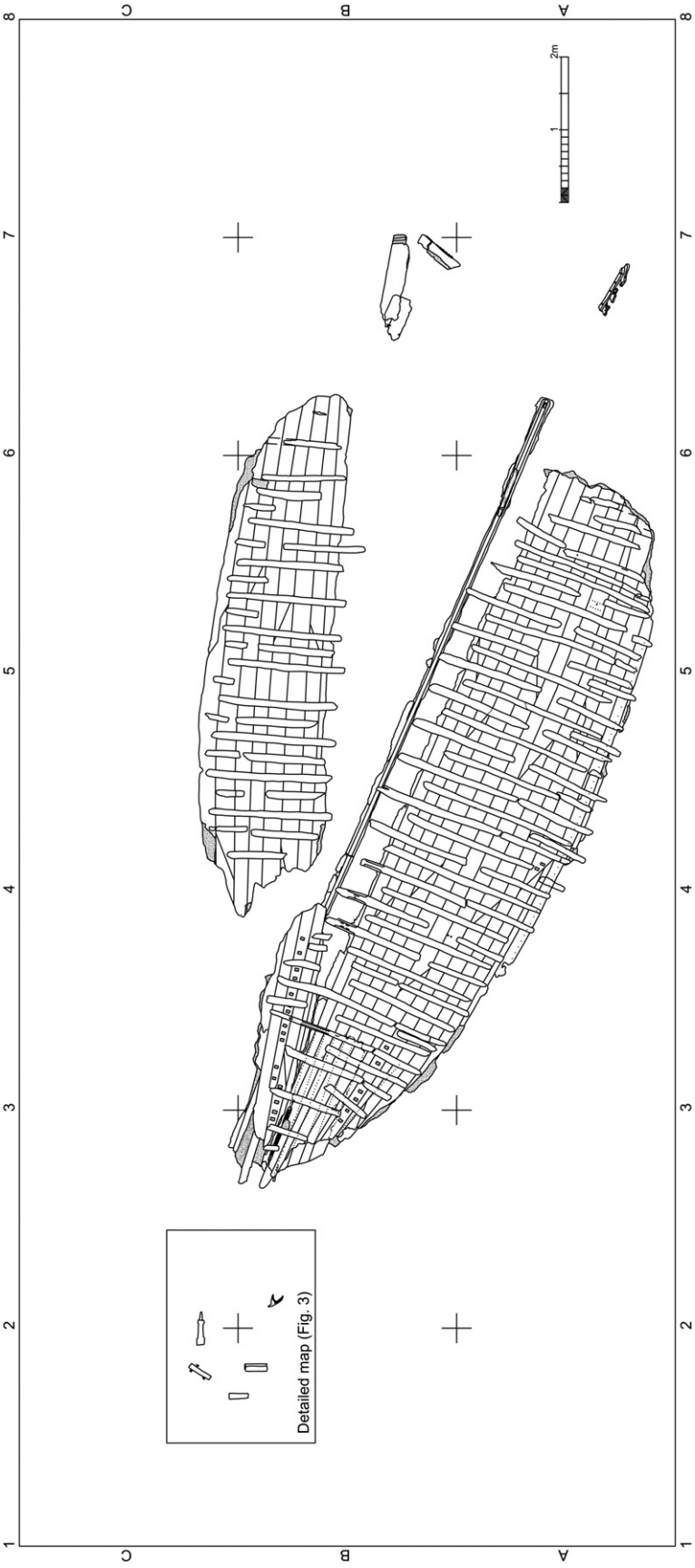

Figure 2. Plan of the Kyrenia shipwreck-site showing the ship's hull and anchor-remains. (Joachim Höhle and Helena Wylde Swiny)

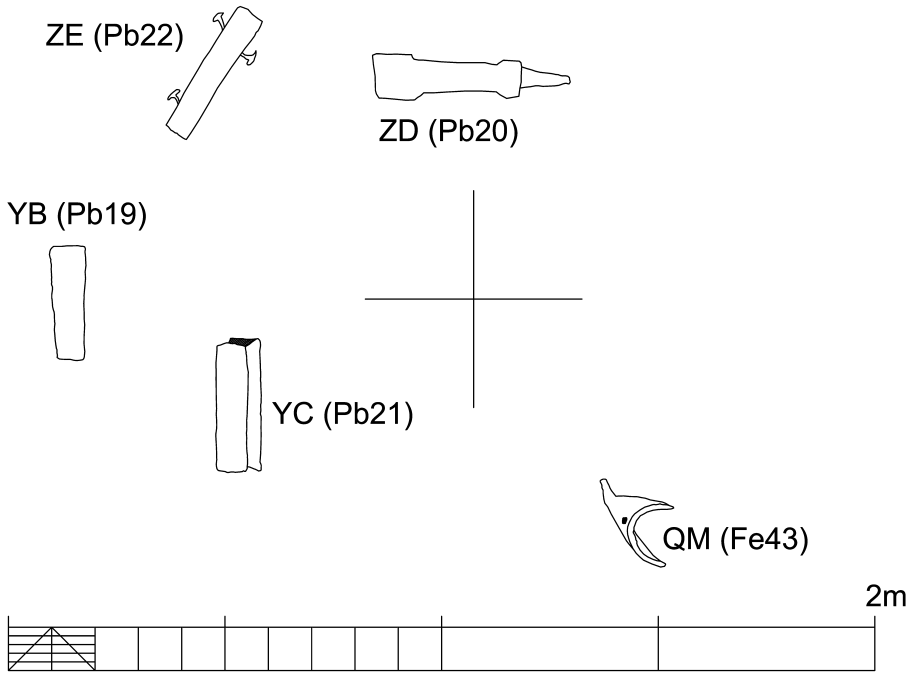

Figure 3. Detailed sketch-map of the anchor-remains on the Kyrenia shipwreck site. (Susan W. Katzev)

Table 1. *Lead-isotope data of Kyrenia lead anchor-stock core fillings*

Registration no.	206Pb/204Pb	207Pb/204Pb	208Pb/204Pb	207Pb/206Pb	208Pb/206Pb
Pb 19 [YB]	18.849	15.684	38.858	0.83174	2.06147
Pb 20 [ZD]	18.852	15.688	38.868	0.83181	2.06179
Pb 21 [YC]	18.853	15.686	38.864	0.83169	2.06144
Pb 22 [ZE]	18.840	15.677	38.837	0.83210	2.06144

Analyses by Jon Woodhead, Laboratory for Geochemistry, School of Earth Sciences, University of Melbourne. The analyses were performed using the methods described in Baker *et al.*, 2006: 45–56. The analytical uncertainty for all of these results is 0.1% (error 2s).

Table 2. *Weights and dimensions of the four pieces of core-filling*

Core-filling	Weight (kg)	Max. length (mm)	Max. width (mm)	Max. height (mm)
Pb 19 [YB]	7	272	92	45
Pb 20 [ZD]	19	445	112	62
Pb 21 [YC]	21.3	296	64–89	125
Pb 22 [ZE]	20.1	351	62–92	104

Tiny fragments of wood from the anchor were extracted from the tooth concretion and identified as Kermes oak (*Quercus coccifera*). Oak was the material of choice for wooden hook anchors (Haldane 1984: 17; Hadas *et al.*, 2005: 304–05); the well-preserved anchor of the Ma'agan Mikhael ship, for example, was made entirely of Kermes oak (Rosloff, 2003: 144, wrote that all anchor wood was identified as *Quercus calliprinos*; Liphschitz, 2004: 157, 161 corrected this misidentification).

Construction of the anchor

The overall construction of the Kyrenia ship's anchor is similar to that of the five Tektaş Burnu anchors (*c*.440–425 BC) and the Ma'agan Mikhael anchor (*c*.400 BC) (Trethewey, 2001; Rosloff, 2003), but some details are obviously different. Using an adze, the craftsman first hollowed out an oblong cavity from a single timber, forming the mould for filling the core of the wooden stock with molten lead. He then cut out a section from the side of the stock, enough to create a tight fit onto the shank. Before connecting the two anchor parts, he chiselled out a small opening (19 × 44 mm) through the thickness of the shank—where the shank would be fitted into the stock (Fig. 9). This woodwork eliminated the need for a cotter to join the stock and shank, as was used in the construction of the Ma'agan Mikhael ship's anchor. Adze-marks

 © 2012 The Authors. International Journal of Nautical Archaeology © 2012 The Nautical Archaeology Society

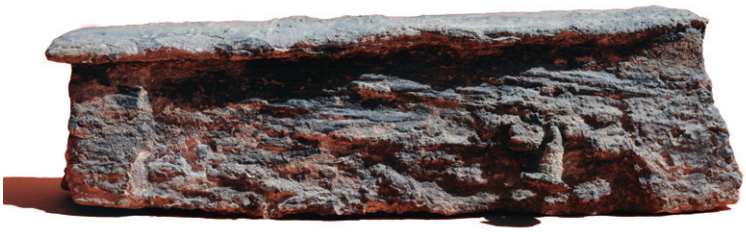

Figure 4. Kyrenia Type IIb lead anchor-stock core filling Pb 22 showing its long side with one copper nail (see opposite face Fig. 1). (Mustafa Erkan and Kadir Kaba)

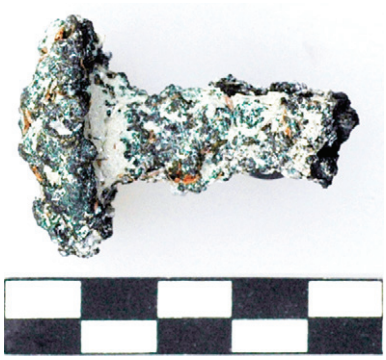

Figure 5. Copper nail from lead anchor-stock core-filling Pb 22 (broken off from face showing in Fig. 4). (Wendy van Duivenvoorde)

impressed on the lead cores, the asymmetrical and irregular shapes of the cores, and the inconsistent lengths of the copper nails driven into core-filling Pb 22 all evince the Kyrenia anchor's particular construction technique.

Next the craftsman melted lead and poured the molten metal into the mould, overfilling it so that some spilled over the top of the casing and solidified to form a cap. The stock cavities, and thus the cores, were trapezoidal in section, which is typical for Type II anchors. This shape secured the heavy lead cores in place and prevented them from breaking through the bottom of the wooden stock during use (Kapitän, 1969: 28; 1973: 389–90; 1984: 36). The cap also confirms that the anchor-stock core was cast with the stock upside down, so that the widest parts of the wooden moulds were at the bottom (Trethewey, 2001: 110). Striations visible on the mould surfaces of the Kyrenia lead core are a surface effect caused by the molten lead being poured at a temperature sufficiently close to its melting-point of 327°C that the lead solidified immediately upon contact with the sides of the wooden casing. When lead is poured at a temperature greater than 450°C, such striations do not form and the lead surface tends to emerge clean and smooth (Whittick, 1961: 105–06) (Michael Katzev noted this in his anchor workbook in the 1970s, the source used by Ken Trethewey (2001: 112)). These striations are typical for Type II anchors in general—see, for example, the Tektaş Burnu lead anchor-stock cores (Trethewey, 2001: 112).

The Kyrenia anchor-stock core-fillings were cast with four batches of molten lead poured into the carved mould openings of the wooden stock; one on either side of the anchor's shank. Pb 19 represents the first pour, which filled the cavity at the bottom of the mould. After the lead had cooled and set, the second batch of molten lead (Pb 20) was poured into the opposite side of the mould. The craftsman may temporarily have closed off the connecting channel on the other side to prevent the lead from seeping into the other cavity, although this was not necessary as molten lead sets rather quickly. Waiting for each successive batch to cool and set before pouring the next, he subsequently poured the third and fourth batches of molten lead, eventually filling the anchor-stock core completely with lead (Pb 21 and Pb 22) and completing the cast. At some point in the process, before pouring the last two batches of molten lead, the craftsman hammered four copper nails through pre-drilled holes into the mould-cavity on one end of the wooden stock—two from either side (Pb 22). These functioned as casting-bolts, assisted in stabilizing the lead core within the stock, and marked the heavier side of the anchor-stock.

One-armed anchors with lead-filled stock

The wooden anchor-stock from the Kyrenia ship demonstrates a weight imbalance of 10.8 kg between the two sides of the stock. This is not atypical of Type II lead cores (Frey *et al.*, 1978: 296; Kapitän, 1978: 272). This weight difference has led some to speculate that an imbalanced stock is indicative of single-armed anchors. Based on ethnographic and archaeological research of one-armed anchors, Kapitän (1973: 389–92) theorized that an imbalanced stock helped ensure that the anchor would fall with its arm down. The performance of one-armed wooden anchors was facilitated by attaching the stock to the shank on the same side as the arm, as demonstrated by the anchor of the Ma'agan Mikhael ship (Rosloff, 2003).

Craftsmen making Type-II wooden anchors probably created imbalanced stocks deliberately, and they simply may not have taken extreme care in casting the lead cores of equal weight. The nature of the construction method also made it difficult to cast two perfectly symmetrical cores of equal weight. Imbalanced

© 2012 The Authors. International Journal of Nautical Archaeology © 2012 The Nautical Archaeology Society

Table 3. *Results of semi-quantitative surface analysis of drill-shavings of Kyrenia anchor-stock core copper nails. Scanning electron microscope with EDAX detector, CSIRO, Perth*

Samples	Wt %										At %									
Anchor-stock core Pb 22	SiK	S K	SnL	SbL	FeK	NiK	CuK	AsK	PbL	Total	SiK	S K	SnL	SbL	FeK	NiK	CuK	AsK	PbL	Total
Nail no. 1	0.43	0.26	0.00	0.25	0.47	0.03	98.47	0.08	0.00	100	0.96	0.52	0.00	0.13	0.53	0.03	97.75	0.07	0.00	100
Nail no. 1	0.45	0.31	0.00	0.20	0.46	0.00	98.24	0.00	0.35	100	1.02	0.60	0.00	0.11	0.52	0.00	97.65	0.00	0.11	100
Nail no. 1	0.41	0.04	0.00	0.04	0.49	0.00	98.87	0.00	0.15	100	0.93	0.08	0.00	0.02	0.56	0.00	98.37	0.00	0.04	100
Nail no. 2	0.45	0.02	0.04	0.07	0.25	0.05	97.91	0.24	0.96	100	1.02	0.05	0.02	0.04	0.29	0.05	98.03	0.20	0.29	100
Nail no. 2	0.06	0.00	0.00	0.04	0.28	0.09	98.15	0.11	1.28	100	0.13	0.00	0.00	0.02	0.32	0.10	98.94	0.09	0.39	100
Nail no. 2	0.20	0.00	0.07	0.04	0.30	0.03	98.24	0.08	1.04	100	0.46	0.00	0.04	0.02	0.34	0.04	98.72	0.06	0.32	100
Nail no. 3	0.48	0.25	0.00	0.20	0.42	0.00	98.39	0.13	0.13	100	1.07	0.50	0.00	0.10	0.48	0.00	97.70	0.11	0.04	100
Nail no. 3	0.47	0.39	0.00	0.05	0.40	0.00	98.30	0.19	0.22	100	1.04	0.76	0.00	0.02	0.45	0.00	97.50	0.16	0.07	100
Nail no. 3	0.21	0.11	0.08	0.13	0.45	0.00	98.64	0.05	0.33	100	0.48	0.23	0.04	0.07	0.51	0.00	98.53	0.04	0.10	100
Nail no. 4	0.07	0.04	0.02	0.00	0.37	0.02	99.12	0.00	0.36	100	0.16	0.08	0.01	0.00	0.42	0.02	99.20	0.00	0.11	100
Nail no. 4	0.28	0.12	0.00	0.06	0.36	0.00	98.87	0.31	0.00	100	0.63	0.24	0.00	0.03	0.40	0.00	98.43	0.26	0.00	100
Nail no. 4	0.20	0.22	0.00	0.00	0.47	0.08	98.87	0.00	0.15	100	0.46	0.43	0.00	0.00	0.53	0.09	98.44	0.00	0.05	100

stocks, however, do not provide conclusive evidence for one-armed anchors; the iron anchors of the 7th-century-AD Byzantine shipwreck at Yassıada are typical examples from the archaeological record of two-armed anchors with imbalanced stocks (Van Doorninck, 1982: 130, 133, 139). So the weight difference between the two sides of the Kyrenia anchor-stock is, on its own, insufficient evidence to conclude that the Kyrenia anchor was one-armed. On the other hand, the recovery of only a single ferrous anchor-tooth concretion from the wreck-site after a determined search for metallic objects strongly suggests that the Kyrenia ship's anchor did indeed have only one arm.

Analysis and discussion

It has been generally accepted that ancient wooden hook anchors developed from having stone stocks (I) to lead-filled wooden stocks (II), to those with a complete lead stock (III) (Haldane, 1984: 35–6; Eiseman and Ridgway, 1987: 20–22; Trethewey, 2001: 112). Chronologically, however, wooden anchors with stone stocks and those with lead-cored wooden stocks co-existed for about three centuries from their apparently simultaneous introduction in the late-7th century BC. The earliest known examples of stone stocks come from Kition Bamboula (Larnaca) in Cyprus, Pabuç Burnu in Turkey, and Punta della Ristola and Metaponto in Southern Italy; all date between the late-7th and early-6th centuries BC (Gianfrotta, 1977: 286; Frost, 1982: 268; Greene *et al*., 2008: 687). Historical and archaeological evidence seems to agree with the earliest mention of this anchor-type by the Greek poet Alcaeus (620–580 BC) in the late-7th century BC, and the slightly-later representations on black-figured pottery dating to the late-6th and early-5th centuries (Alcaeus, *Apud Herac*., Alleg. 5; Walters, 1893: B156, B184, B285, B294; Lunsingh Scheurleer, 1995: 37, cat. no. 31, APM 2149).

Wooden hook anchors with stone stocks are thought to have been used until the mid-4th century BC, whereas those with lead-cored wooden stocks seem to have remained in use until the 2nd century BC, when they were replaced by anchors with lead-only stocks. The latest dated example of a stone anchor-stock currently known comes from the mid-4th century BC shipwreck at El Sec in Majorca (Gianfrotta, 1977: 289). As for lead-cored wooden stocks, the latest example reportedly was found at Isla Pedrosa in Spain (Ponce I Garrido, 1975: 102), dating concurrently with the earliest example of a completely lead cast anchor-stock from the Chrétienne C shipwreck (Joncheray, 1975: 101–02, 104–08) (2nd century BC).

Some consider the trapezoidal bar found on the Bon Porté shipwreck (*c*.540–510 BC) to be an ingot and not a lead anchor-stock core, due to the absence of casting-bolts, rock inclusions, and a central notch (Joncheray, 1976: 21–3). However, the Type II wooden hook

 © 2012 The Authors. International Journal of Nautical Archaeology © 2012 The Nautical Archaeology Society

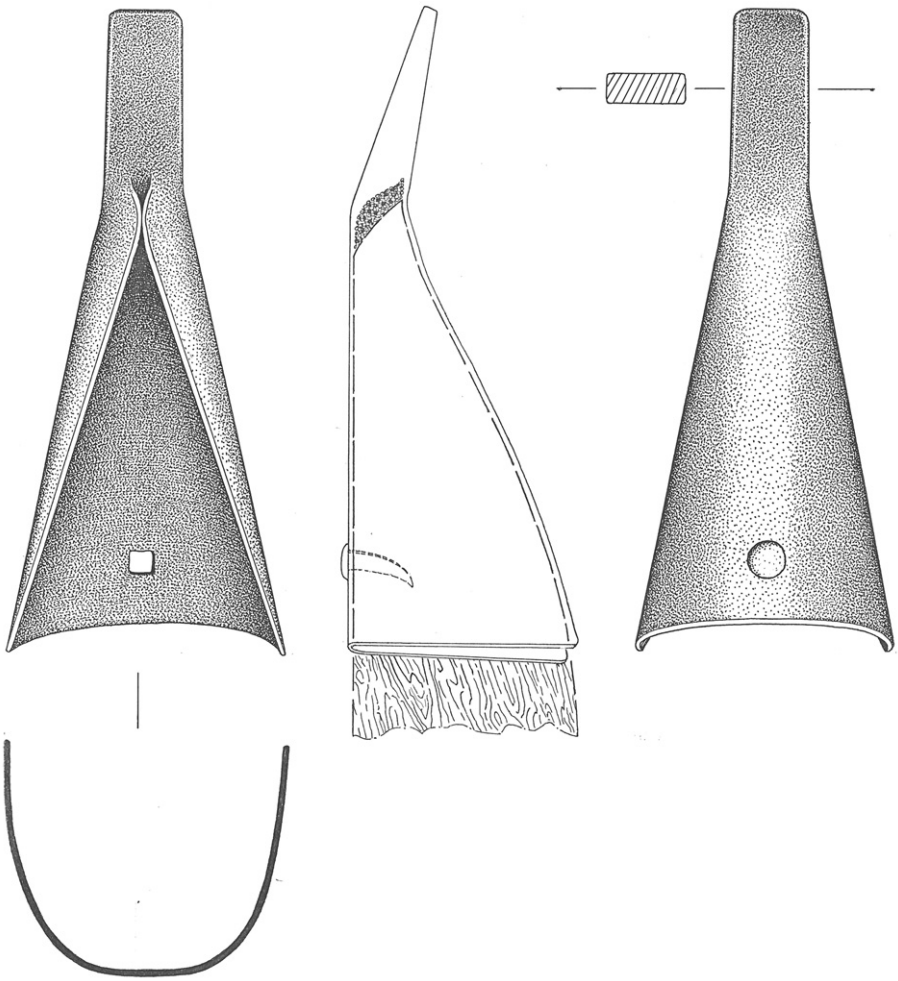

Figure 6. Reconstruction of the iron cone of the Kyrenia anchor-tooth. (Susan W. Katzev)

Figure 7. Detail of the ferrous anchor-tooth concretion. (Mustafa Erkan and Kadir Kaba)

Figure 8. Two halves of the Kyrenia shipwreck's ferrous anchor-tooth concretion. (Mustafa Erkan and Kadir Kaba)

anchor already existed at the time of the Bon Porté ship's sinking. The well-preserved wreck of a small boat (wreck 2) at Mazarrón in south-eastern Spain, dated to the 7th century BC, has yielded the earliest example of a two-armed wooden hook anchor (Negueruela *et al*., 2004: 478). Each arm of the anchor was made from a single compass-timber (a naturally curved or crooked piece of wood) which also turned to form half of the shank. The two parts were fastened together with mortise-and-tenon joints to form the complete anchor-shank. The better-preserved half of the Mazarrón 2 anchor is similar in shape to the one-armed anchor of the Ma'agan Mikhael ship. The other half, the arm of which did not survive, was probably identical.

The occurrence of lead-cored wooden anchor-stocks increased from the 5th century BC, when lead became cheaper and more available in the Mediterranean. Lead-cored stocks co-existed with, but undoubtedly also began replacing, stone stocks. Lead-filled wooden stocks were certainly more expensive than stone stocks, but they were less brittle and so did not break as easily, and would have been smaller and therefore more convenient. Shipwrecks from this period yielding Type IIa anchors include Ma'agan Mikhael and Tektaş Burnu. The recent Type IIa anchors found on the Mazotos shipwreck in Cyprus, currently dated to the 3rd quarter of the 4th century BC, seem to be similar to that from the Ma'agan Mikhael ship (pers. comm. Stella Demesticha). The lead cores of these Type IIa anchors were not connected to one another within the wooden stock (Kapitän, 1984: 37, fig. 4.2a).

The Kyrenia anchor is therefore the first example of a Type IIb anchor from a shipwreck site with a firm chronological context. The cores in Type IIb anchors no longer consisted of separate pieces, but were connected (Kapitän, 1984: 37, fig. 4.2b). The Kyrenia ship's anchor pushes the date of this type's appearance back by at least half a century from that proposed by Haldane (250–150 BC) (1984: 7). The anchors from the Ma'agan Mikhael and Mazarrón 2 ships demonstrate that, unlike their Type I predecessors, the shanks and arms of Type II hook anchors with lead-filled stocks were not simply naturally-grown or shaped crooks. Rather, craftsmen elegantly carved these anchors from compass timbers. It is noteworthy that the shank and arms of these Type II examples were carved together from one piece of wood and were not made from separate elements, in contrast to Type III wooden hook anchors with lead-only stocks. Examples of the latter, with arms made of separate wooden elements, were found on the Chrétienne C shipwreck (2nd century BC) and also include survey finds from Ein Gedi in the Dead Sea (2nd century BC–1st century AD), Elba (exact date unknown), Cefalù (Caldura, exact date unknown), and Laurons (Anchor A). Their craftsmen generally scarfed the arms to the shanks and secured them in place with pegged mortise-and-tenon joints. They also reinforced the arms-shank assembly with a lead collar (Joncheray, 1975: 101–02, 104–08; Maggiani, 1982: 63; Ximénès and Moerman, 1988: 79–82, 85; Purpura, 2003: no. 39; Hadas *et al*., 2005: 301–03, 305–06). The Type III wooden anchor of the Nemi barges (AD 41–65) is not included as an example of this, as it did not have a lead collar. Haldane explains that this anchor functioned as a mooring anchor, not a working anchor, and therefore did not require a collar (1984: 53; 1986).

Finally, the teeth of the anchor-arms, designed to dig into the sea-bed, terminated in protective sheathing or cones made of copper or iron. It was previously thought that tips of the anchor-arms or hooks were sheathed with copper (or bronze) in the Classical Greek period and with iron in the Roman period. This

 © 2012 The Authors. International Journal of Nautical Archaeology © 2012 The Nautical Archaeology Society

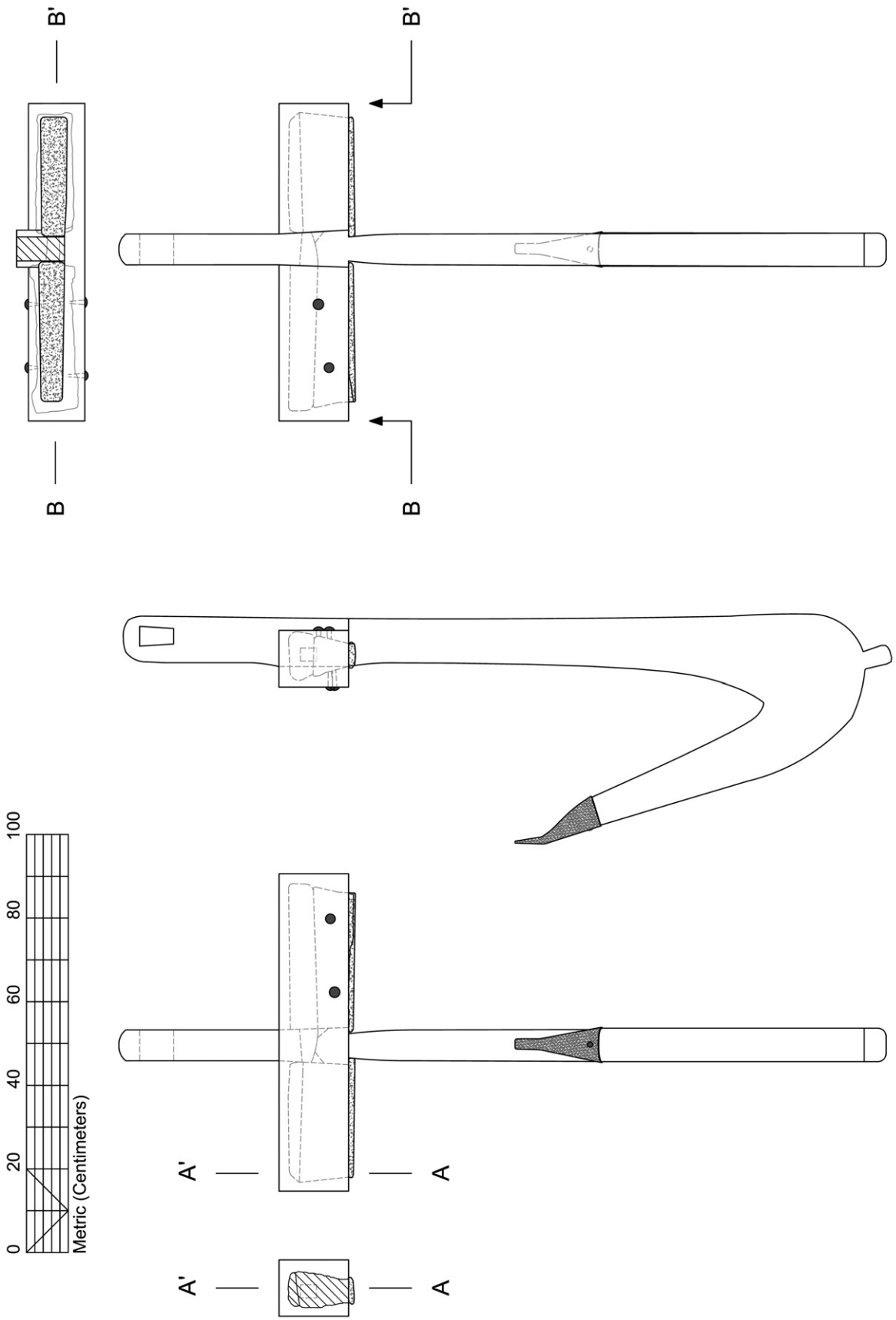

Figure 9. Reconstruction of the Kyrenia ship's anchor—based on its archaeological remains and those of the Ma'agan Mikhael anchor. Light grey lines are hidden or internal features. (Wendy van Duivenvoorde)

supposition was based on a combination of historical and archaeological evidence. Pindar, for example, writing in the 5th century BC, refers to 'the bronze-fluked anchor' (Phytian 4). His statement seemed to be supported by the archaeological anchor-remains from the Porticello shipwreck (Eiseman and Ridgway, 1987: 19–21) and the copper tooth of the Ma'agan Mikhael anchor (Rosloff, 2003: 144–5). The Porticello anchors have been published as being sheathed with sheets of bronze formed into cones, but elemental analysis has yet to confirm whether the metal is bronze or, in fact, copper (Eiseman and Ridgway, 1987: 19–21). It must also be noted that, according to Dorothy Kent Hill (1969: 61), the 'ancients did not distinguish verbally between copper, bronze, and brass, a single word having to serve all three in both Greek and Latin, and, truth to tell, archaeologists are not too careful about the distinction'.

On the other hand, Roman authors suggest the use of iron teeth for wooden anchors in their time. Livy, for example, refers to the tooth of an anchor 'falling like an iron hand' (*Ab Urbe Condita*, book 37, 30.9–10). More specifically, the wooden anchors of the Chrétienne C shipwreck (Joncheray, 1975: 101–02, 106–07) and Nemi ships (AD 41–60) (Speziale, 1931: 312, 315) have provided evidence for iron teeth. Iron teeth were, however, commonly used before the Roman era—from the Archaic to the Hellenistic periods—as shown by the anchor-arm with iron cone found in the harbour of Liman Tepe (7th–6th century BC) (Artzy, 2009: 12–13) and the ferrous concretions of anchor-teeth found on the Tektaş Burnu and Kyrenia shipwrecks (Van Duivenvoorde, forthcoming).

Lastly, the sinking circumstances of the Kyrenia ship, as construed from the wreck's location, condition, and remains, suggest that the ship was carrying only one anchor at the time. The Kyrenia ship does not stand alone in this regard, as other ships wrecked in the Mediterranean seem to have been fitted with but a single anchor; the Ma'agan Mikhael and Mazarrón 2 ships, for example. Other vessels, however, are known to have sunk with multiple anchors still on board. Excavation of the small coastal trader found off Tektaş Burnu, for example, yielded five anchors (Carlson, 2003: 595; Van Duivenvoorde, forthcoming). Ultimately, however, it remains uncertain whether any anchors of the Kyrenia ship (or other similar vessels) could have been lost during the vessel's last journey or were deployed overboard by the crew prior to the ship's sinking, or whether the ship was simply carrying just the one anchor. Either way, one cannot help but think of the wise words of the Greek stoic philosopher Epictetus (*Frag*s, book 0, ch. 89), who warned that 'one must not tie a ship to a single anchor, nor life to a single hope'.

Wendy van Duivenvoorde
Maritime Archaeology Program, Flinders University, Adelaide, Australia

Acknowledgements

I would like to thank Susan Katzev, current Co-ordinator of the Kyrenia Shipwreck Project, for the invitation to study and publish the anchor-remains from the excavation directed by her late husband Michael L. Katzev. I am indebted to Laina Swiny and Robin Piercy for their assistance and to Jeremy Green, head of Maritime Archaeology at the Western Australian Museum, for embracing my studies and granting me permission to work on this project. Much appreciation for support with scientific analyses and wood identification goes to Nili Liphschitz (Botanical Laboratories, Institute of Archaeology, Tel Aviv University), Sophie Stos (Oxalid database), Michael Verrall (CSIRO, Perth), and Jon Woodhead (School of Earth Sciences, University of Melbourne).

References

Artzy, M., 2009, Liman Tepe Underwater Excavations: a retrospective, *Recanti Institute for Maritime Studies* **35**, 11–15.

Baker, J., Stos, S. and Waight, T., 2006, Lead Isotope Analysis of Archaeological Metals by Multiple-Collector Inductively Coupled Plasma Mass Spectrometry, *Archaeometry* **48**.1, 45–56.

Carlson, D. N., 2003, The Classical Greek Shipwreck at Tektaş Burnu, *American Journal of Archaeology* **107**.4, 581–600.

Dimitrov, B., 1979, Note: Underwater Research along the South Bulgarian Black Sea Coast in 1976 and 1977, *IJNA* **8**.1, 70–79.

Eiseman, C. J. and Ridgway, B. S., 1987, *The Porticello Shipwreck: A Mediterranean Merchant Vessel of 415–385 BC*. Nautical Archaeology Series 2, College Station TX.

Frey, D. A., Hentschel, F. D., and Keith, D. H., 1978, Deepwater Archaeology: the Capistello Wreck Excavation, Lipari, Aeolian Islands, *IJNA* **7**.4, 279–300.

Frost, H., 1982, The Birth of the Stocked Anchor and the Maximum Size of Early Ships: thoughts prompted by discoveries at Kition Bamboula, Cyprus, *Mariner's Mirror* **68**.3, 263–73.

Gianfrotta, P. A., 1977, First Elements for the Dating Stone Anchor Stocks, *IJNA* **6**.4, 285–92.

Green, J. N., Hall, E. T. and Katzev, M. L., 1967, Survey of a Greek Shipwreck off Kyrenia, Cyprus, *Archaeometry* **10**, 47–56.

Greene, E. S., Lawall, M. L. and Polzer, M. E., 2008, Inconspicuous Consumption: The Sixth-Century BCE Shipwreck at Pabuç Burnu, Turkey, *American Journal of Archaeology* **112**.4, 685–711.

Hadas, G., Liphschitz, N. and Bonani, G., 2005, Two Ancient Wooden Anchors from Ein Gedi, on the Dead Sea, Israel, *IJNA* **34**.2, 299–307.

 © 2012 The Authors. International Journal of Nautical Archaeology © 2012 The Nautical Archaeology Society

Haldane, D. D., 1984, The Wooden Anchor. MA dissertation, Texas A&M University, College Station.
Haldane, D. D., 1986, Wooden Anchor Arm Construction, *IJNA* **15**.2, 163–6.
Haldane, D. D., 1990, Anchors of Antiquity, *The Biblical Archaeologist* **53**.1, 19–24.
Joncheray, J-P., 1975, *L'Épave 'C' de la Chrétienne*. Premier supplément aux Cahiers d'archéologie subaquatique. Paris.
Joncheray, J-P., 1976, L'Épave Grecque, ou Étrusque, de Bon Porté, *Cahiers d'archéologie subaquatique* **5**, 5–36.
Kapitän, G., 1969, Un hallazgo arqueológico importante en Siracusa: El relleno de plomo de un cepo romano de madera procendente del Puerto Grande, *CRIS* (revista de la mar) **120**, 26–31. Barcelona.
Kapitän, G., 1973, Greco-Roman Anchors and the Evidence for the One-Armed Wooden Anchor in Antiquity, in D. J. Blackman (ed.), *Marine Archaeology*, 383–95. London.
Kapitän, G., 1978, Exploration at Cape Graziano, Filicudi, Aeolian Islands, 1977: Results with Annotations on the Typology of Ancient Anchors, *IJNA* **7**.4, 269–77.
Kapitän, G., 1980, Meeresarchäologie in Bulgarien—Ankerfunde im Schwarzen Meer, *Das Logbuch* **16**, 45–8.
Kapitän, G., 1984, Ancient Anchors—Technology and Classification, *IJNA* **13**.1, 33–44.
Katzev, S., 2005, Resurrecting an Ancient Greek Ship: Kyrenia, Cyprus, in G. F. Bass (ed.), *Beneath the Seven Seas: Adventures with the Institute of Nautical Archaeology*, 72–9. London.
Kent Hill, D., 1969, Bronze Working: Sculpture and Other Objects, in C. Roebuck (ed.), *The Muses at Work: Arts, Crafts, and Professions in Ancient Greece and Rome*, 60–95. Cambridge MA.
Liphschitz, N., 2004, Dendroarchaeological Investigations, in E. Linder, Y. Kahanov and J. Tresman, *The Ma'agan Mikhael Ship: A Recovery of a 2400-Year-Old Merchantman*, Final Report, Vol. **2**, 156–63. Haifa.
Lunsingh Scheurleer, R. A., 1995, Schip in zicht, *Mededelingen blad Vereniging van vrienden Allard Pierson Museum* **63/64**, 29–44. Exhibition catalogue: Varen, vechten en verdienen: Scheepvaart in de Oudheid.
Maggiani, A., 1982, Isola d'Elba, in Archeologia Subaquea, *Bollettino d'Arte, Supplement* **4**, 62–4.
Negueruela, I., González, R., San Claudio, M., Mendéz, Á., Presa, M. and Marín, C., 2004, Mazarrón-2: el barco fenicio del siglo VII a.C. Campaña de noviembre 1999/marzo 2000, in A. González Blanco, G. Matilla Séiquer and A. Egea Vivancos (eds), *El mundo púnico: Religión, antropología y cultura material: Actas II Congreso Internacional del Mundo Púnico, Cartagena, 6–9 de abril de 2000*, 453–84. Murcia.
Ponce I Garrido, A. M., 1975, Descripción de algunas de las piezas halladas en el yacimiento de Isla Pedrosa, *Inmersión y ciencia* **14**, 95–111. Federación Española de Actividades Subacuáticas. Departamento de Actividades Científicas.
Purpura, G. (8 March 2003), Le ancore, Archaeogate: Il portale Italiano di archeologia: http://www.archaeogate.org/subacquea/article.php?id=127.
Rosloff, J. P., 2003, The Anchor, in E. Linder, Y. Kahanov and E. Black, *The Ma'agan Mikhael Ship: A Recovery of a 2400-Year-Old Merchantman*, Final Report, Vol. **1**, 140–46. Haifa.
Speziale, G. C., 1931, The Roman Anchors found at Nemi, *Mariner's Mirror* **17**.4, 309–20.
Trethewey, K., 2001, Lead Anchor-Stock Cores from Tektaş Burnu, Turkey, *IJNA* **30**.1, 109–14.
Van Doorninck, F. H. Jr, 1982, The Anchors, in G. F. Bass and F. H. Van Doorninck Jr, *Yassı Ada: A Seventh-Century Byzantine Shipwreck*, Vol. **1**, 121–42. College Station TX.
Van Duivenvoorde, W., forthcoming, The Ship: Hull Remains and Anchors, in D. N. Carlson (ed.), *Tektaş Burnu Shipwreck*. Monograph in the Ed Rachal Nautical Archaeology Series. College Station TX.
Walters, H. B., 1893, *Catalogue of Greek and Etruscan Vases in the British Museum*. Volume II: Black-Figured Vases. London.
Whittick, G. C., 1961, The Casting Technique of Romano-British Lead Ingots, *Journal of Roman Studies* **51**.1–2, 105–11.
Ximénès, S. and Moerman, M., 1988, Vestiges d'ancres antiques en bois dans le port romain de laurons (Commune de Martigues, Bouches-du-Rhône), *Cahiers d'Archéologie Subaquatique* **7**, 77–89.

A Stone Anchor from the Farasan Islands, Saudi Arabia

A recent rapid archaeological survey of the three main islands of the Farasan archipelago has identified a large, three-holed stone anchor, the first to be reported in an on-land context from Saudi Arabia. The Farasan archipelago lies off the Arabian shore of the southern Red Sea, some 50 km from Jizan, the Saudi port-town from which it is today reached (Fig. 1). Most of the more than 140 islands are in Saudi territory, while the southernmost extend into Yemen. Three of the larger islands—Greater Farasan, Segid and Qumah—are inhabited. The islands' geology comprises elevated fossil-coral plateaux which reach a maximum altitude of 70 m, giving rise to a largely flat, arid terrain cut through with occasional shallow wadis on the larger islands, and areas of coral-sand dunes and plains.

The climate is hot and arid, with mean annual rainfall at the nearest weather-station in Jizan measuring 129 mm/yr (Hall *et al.*, 2010: 191). Limited arable and date-palm cultivation occurs in some wadis. Wells, many probably in use since Antiquity, occur at several locations around Greater Farasan and Segid. The presence of accessible groundwater must have represented an attractive source of water for ships navigating the southern Red Sea in the past (Cooper and Zazzaro, forthcoming). Moreover, medieval and modern pilot

© 2012 The Authors. International Journal of Nautical Archaeology © 2012 The Nautical Archaeology Society