Swansea Metropolitan University
Prifysgol Fetropolitan Abertawe

# Geometric Weight Transfer and Wheel Load Distribution

# Further parts of the weight transfer

Having determined the most significant weight transfer the final, total weight transfer can be found by adding what are usually two less significant weight transfers to the total already found

2. **Geometric weight transfer due to sprung mass**
3. **Geometric weight transfer due to the unsprung mass**

**2. Geometric weight transfer due to sprung mass $WT_{src}$** taken as acting at the roll centre height and which is resisted by the tyres alone.

$$WTsrcf = \frac{Msf \times a_Y \times hf}{Tf}$$ Eqn 9f

$$WTsrcr = \frac{Msr \times a_Y \times hr}{Tr}$$ Eqn 9r

# Results for $WT_{srcf}$ and $WT_{srcr}$

$WT_{srcf}$ =

$WT_{srcr}$ =

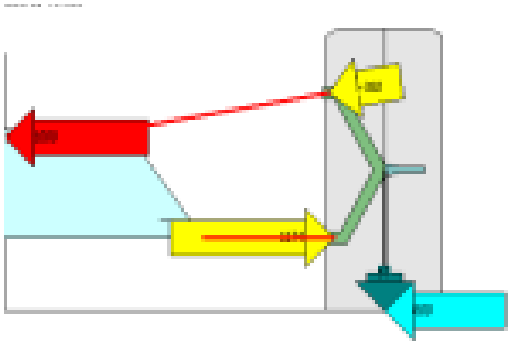

## 3. Weight transfer due to the unsprung mass - taken as acting at the height of the wheel centre and is resisted by the tyres alone

$$WTusf = \frac{Musf \times a_y \times r}{Tf}$$ Eqn 10f

$$WTusr = \frac{Musr \times a_y \times r}{Tr}$$ Eqn 10r

# Results for $WT_{usf}$ and $WT_{usr}$

$WT_{usf}$ =

$WT_{usr}$ =

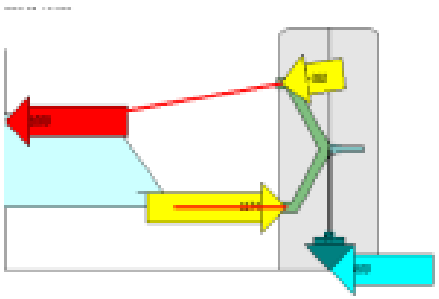

# Total weight transfer

The total weight transfer is then found from

Front = $WT_{sf} + WT_{srcf} + WT_{usf}$

*(Eqn 8f + Eqn 9f + Eqn 10f)*

Rear = $WT_{sr} + WT_{srcr} + WT_{usr}$

*(Eqn 8r + Eqn 9r + Eqn 10r)*

# Total weight transfers

Front

Rear

# Check value

If the calculations have been carried out accurately the total of the distributed weight transfer found by this method will equal the simple weight transfer found from

$$WT = \frac{M_t a_y H_t}{T}$$

But this will only work if the CG Height is for the combined sprung and unsprung masses

# Determination of individual wheel loads

The following suffixes are used to identify the wheel loads .

o = outer  i = inner  z = vertical  y = lateral

So, for example, $F_{zof}$ = Vertical load on the outer front tyre

The front and rear, outer wheel loads can now be determined by taking the static wheel loads and <u>adding</u> the load transfers to them.

Similarly the inner wheel loads can be determined by <u>subtracting</u> the load transfers from their static loads.

# Example - Front Outer Wheel Load

**Fzof = (Msof + Musof) x 9.81 + Total Front Weight Transfer**

# Final individual corner loads

Corner ⟵

Front ↑

| | |
|---|---|
| $F_{zif}$ | $F_{zof}$ |
| $F_{zir}$ | $F_{zor}$ |

# Front outer wheel load $F_{zof}$ for example data

The car is turning left so the weight transfer calculated will be added to the static load on the front right wheel due to Unsprung mass ($M_{sf}$) and the Sprung mass ($M_{usf}$)

Static load per wheel $= (M_{sf}/2 + M_{usf}/2) \times 9.81$

$= (312/2 + 60/2) \times 9.81$

$= (156 + 30) \times 9.81$

$= 1824.66$ N

# Front outer wheel load $F_{zof}$

Total front weight transfer =

Total wheel load

$F_{zof}$= Total front weight transfer + Static load

# Results for individual wheel loads

$F_{zif} =$

$F_{zof} =$

$F_{zir} =$

$F_{zor} =$

# Modifications to calculations needed for a live of deDion type axle

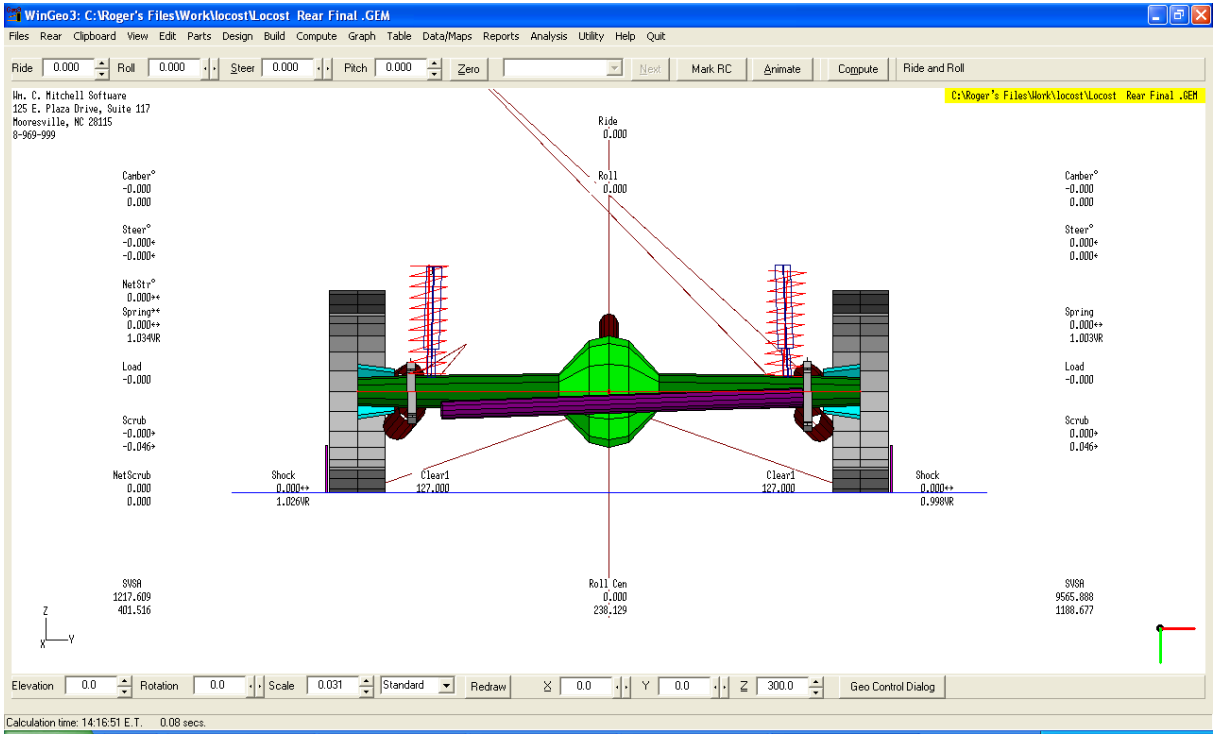

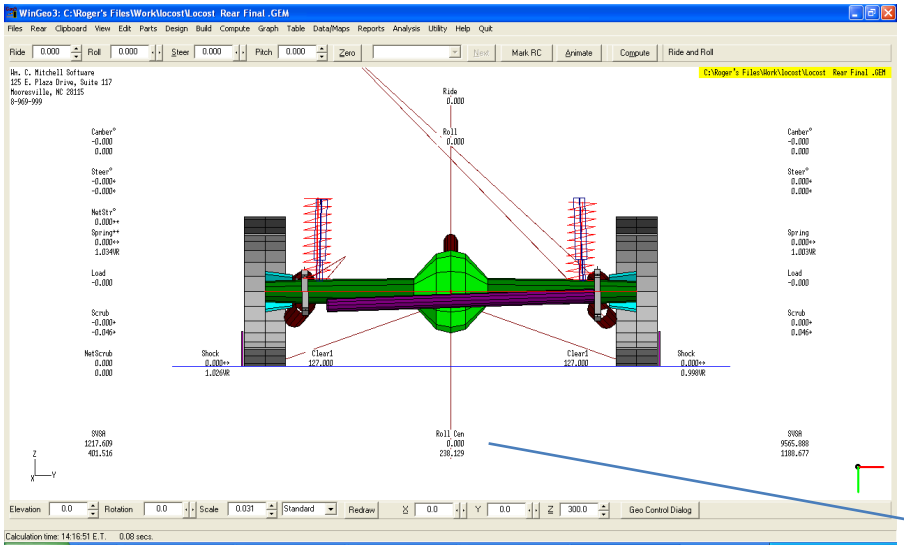
WinGeo3: C:\Roger's Files\Work\locost\Locost Rear Final .GEM
Files Rear Clipboard View Edit Parts Design Build Compute Graph Table Data/Maps Reports Analysis Utility Help Quit
Ride 0.000 Roll 0.000 Steer 0.000 Pitch 0.000 Zero Next Mark RC Animate Compute Ride and Roll
Wm. C. Mitchell Software
125 E. Plaza Drive, Suite 117
Mooresville, NC 28115
0-969-999
C:\Roger's Files\Work\locost\Locost Rear Final .GEM
Ride 0.000
Roll 0.000
Camber° -0.000 0.000
Steer° -0.000+ -0.000+
NetStr° 0.000++
Spring** 0.000++ 1.034NR
Load -0.000
Scrub -0.000+ -0.046+
NetScrub 0.000 0.000
Shock 0.000++ 1.826NR
Clear1 127.000
Clear1 127.000
Shock 0.000++ 0.998NR
SVSR 1217.609 401.516
Roll Cen 0.000 238.129
SVSR 9565.888 1188.677
Elevation 0.0 Rotation 0.0 Scale 0.031 Standard Redraw X 0.0 Y 0.0 Z 300.0 Geo Control Dialog
Calculation time: 14:16:51 E.T. 0.08 secs.

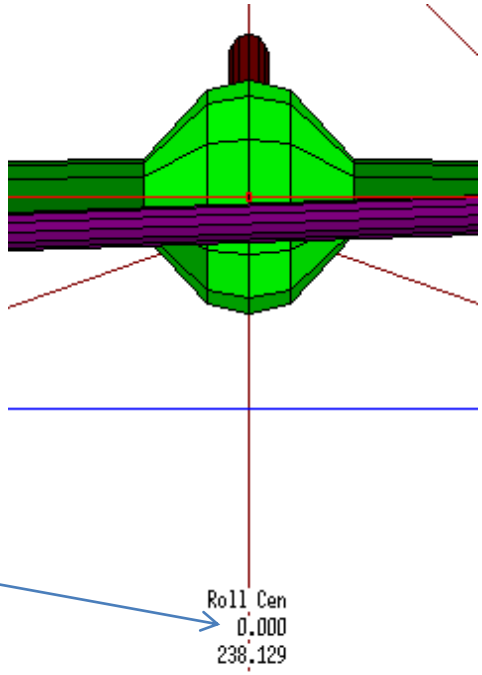
Roll Cen
0.000
238.129

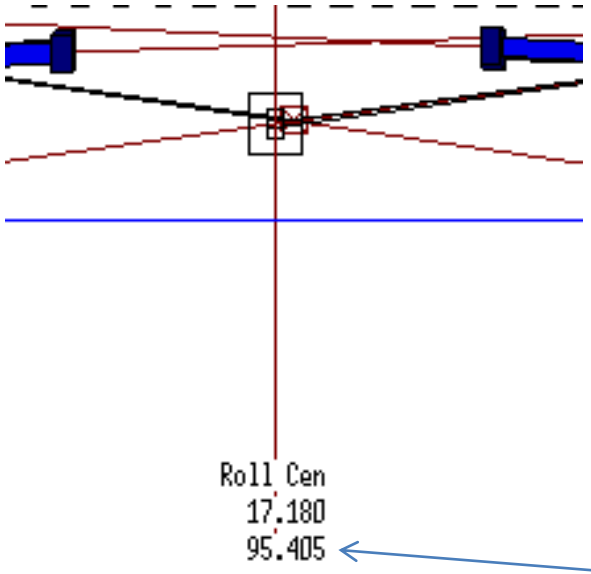
Roll Cen
17.180
95.405

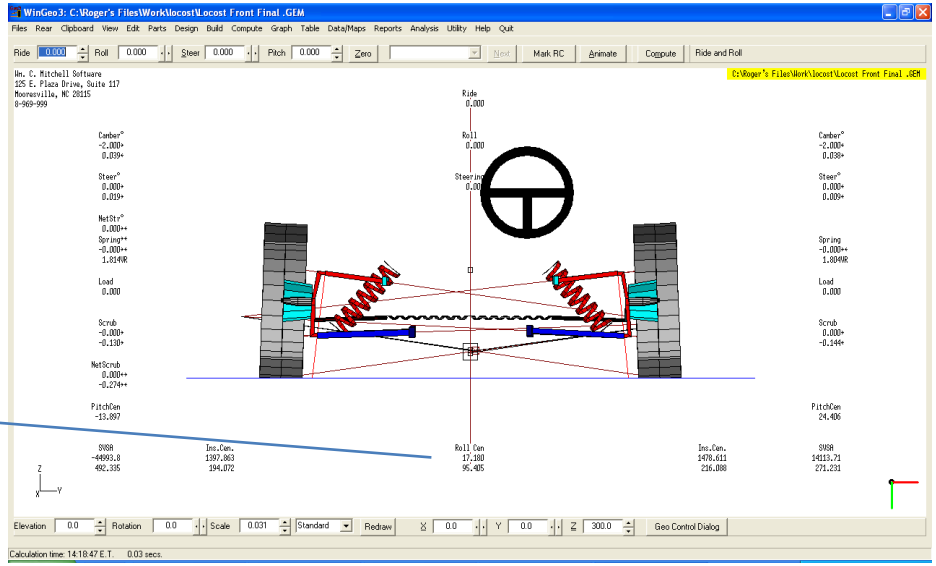
WinGeo3: C:\Roger's Files\Work\locost\Locost Front Final .GEM
Files Rear Clipboard View Edit Parts Design Build Compute Graph Table Data/Maps Reports Analysis Utility Help Quit
Ride 0.000 Roll 0.000 Steer 0.000 Pitch 0.000 Zero Next Mark RC Animate Compute Ride and Roll
Wm. C. Mitchell Software
125 E. Plaza Drive, Suite 117
Mooresville, NC 28115
0-969-999
C:\Roger's Files\Work\locost\Locost Front Final .GEM
Ride 0.000
Roll 0.000
Camber° -2.000+ 0.039+
Steer° 0.000+ 0.019+
NetStr° 0.000++
Spring** -0.000++ 1.814NR
Load 0.000
Scrub -0.000+ -0.130+
NetScrub 0.000++ -0.274++
PitchCen -13.897
Camber° -2.000+ 0.038+
Steer° 0.000+ 0.009+
Spring -0.000++ 1.804NR
Load 0.000
Scrub 0.000+ -0.144+
PitchCen 24.406
SVSR -44993.8 492.335
Ins.Cen. 1397.863 194.072
Roll Cen 17.180 95.405
Ins.Cen. 1478.611 216.088
SVSR 14113.71 271.231
Elevation 0.0 Rotation 0.0 Scale 0.031 Standard Redraw X 0.0 Y 0.0 Z 300.0 Geo Control Dialog
Calculation time: 14:18:47 E.T. 0.03 secs.

# Live axle calculation

Where the vehicle has a rear axle the spring track is used instead of the wheel track and spring rate is used instead of the combined wheel and tyre rate. The body now compresses the springs across the spring track Ts rather than the wheel track.

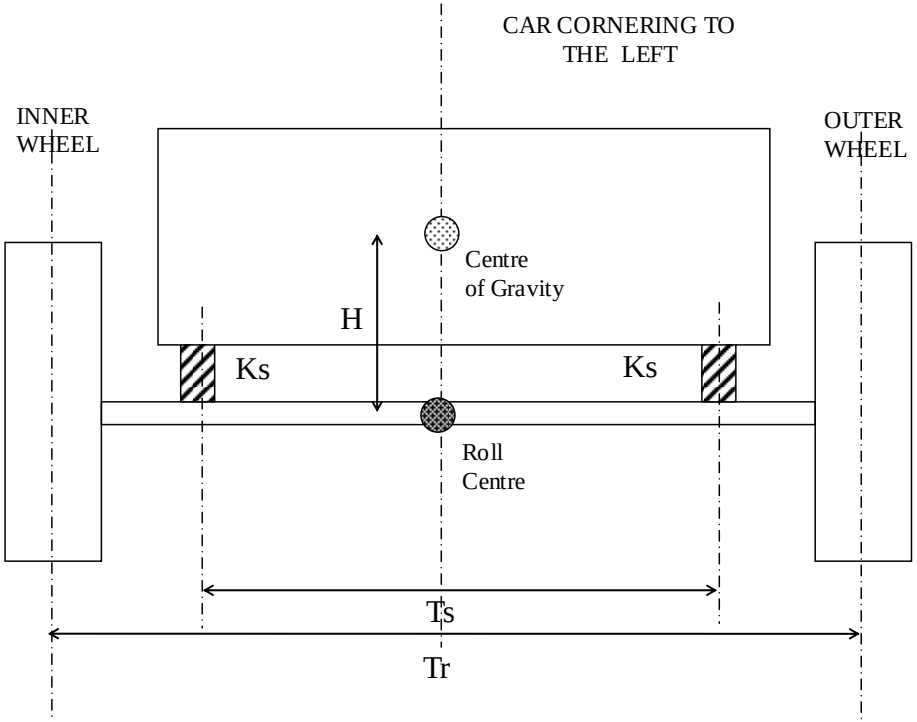

# Roll stiffness for a car with a live axle

The analysis is exactly the same but

Spring track, $T_s$ replaces $T_r$

$K_{wr}$ is equal to $K_{sr}$ (unless some suspension leverage exists due to the positioning of the Spring)

deflection δ of the wheel is now the direct deflection of the spring on the axle.

$K_{\varphi r}$ then becomes

$$K_{\varphi r} = \left(\frac{T_{sr}^2 \times K_{wr}}{2}\right) \quad \text{Nm/Rad} \qquad (\text{Eqn11})$$

# Roll angle

The roll angle is now found in the same way as before

$$\varphi = \frac{M_{ot}}{K_{\varphi t}}$$

# Weight transfer with live rear axle

With a live rear axle the load increase at the spring is not the weight transfer experienced at the wheel. As the body rolls relative to the axle the outer spring is compressed and the spring load increase is $F_{sr}$ then:

$$Fsr = \frac{\varphi \, Ts \;\; Ksr}{2}$$

The increased <u>wheel</u> load produced by this increased <u>spring</u> load is $WT_{srl}$

# To find the weight transfer reacted at the wheel,

Equate the moment produced by the increased wheel load $WT_{srl}$ with moment produced by increased spring load $F_{sr}$

$$WT_{srl} \times T_r = F_{sr} \times T_s$$

Substituting for $F_{sr}$ gives

$$WT_{srl} = \frac{T_s^2 \varphi K_{sr}}{2 \times T_r} \qquad \text{Eqn 12}$$

# Example 2 Data

| | | |
|---|---|---|
| $T_f$ | Front track | 1.270 m |
| $T_r$ | Rear track | 1.335 m |
| Ts | Spring track | 0.96m |
| L | Wheel base | 2.351 m |
| $H_s$ | Sprung mass CG height above ground | 0.374 m |
| $H_{sra}$ | Sprung mass CG height above Roll axis …… | m |
| $M_{sf}$ | Front sprung mass | 312 kg |
| $M_{sr}$ | Rear sprung mass | 328 kg |
| $M_{usf}$ | Front total unsprung mass | 76 kg |
| $M_{usr}$ | Rear total unsprung mass | 88 kg |
| r | Rolling radius of tyre | 0.275m |
| $h_f$ | Front RC height | 95 mm |
| $h_r$ | Rear RC Height | 238 mm |
| $K_{wr}$ | Rear wheel rate | 29,155 N/m |
| $K_{wf}$ | Front wheel rate | 60 025 N/m |
| SLf | Front suspension leverage | 1.83 |
| $a_y$ | Lateral acceleration | $6 m/s^2$ |

Front suspension - unequal length double wishbones

Rear suspension - live axle

# Finding the Height of CG above roll axis

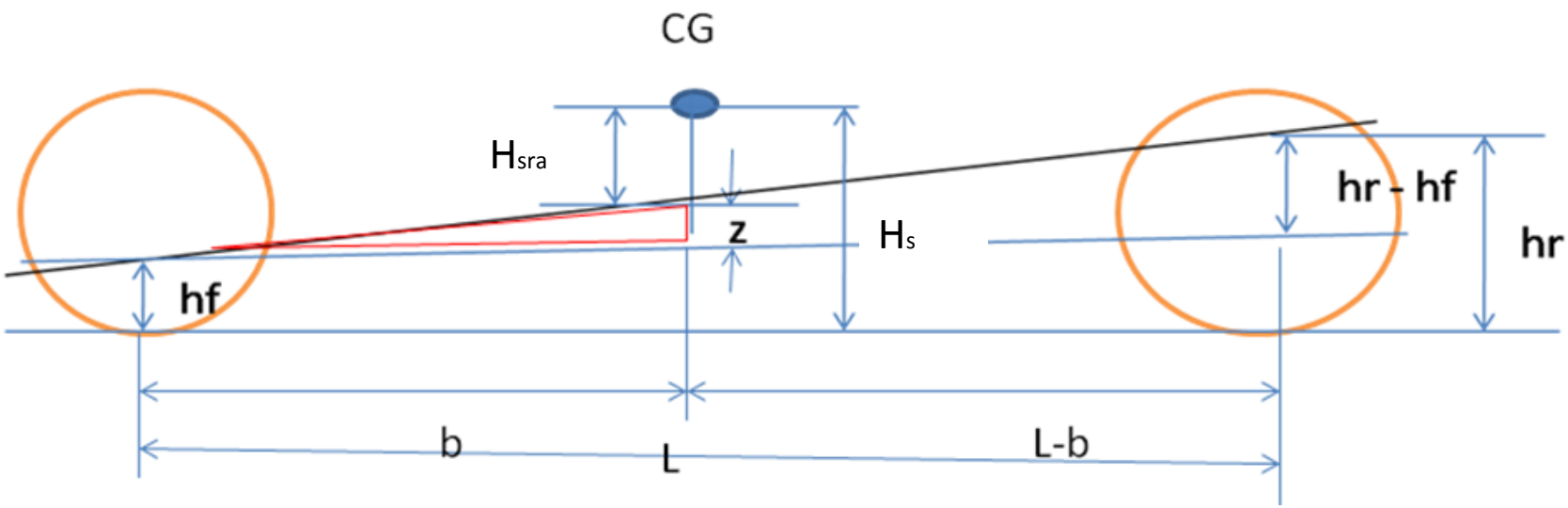

# Example to find CG height above roll axis

As an example assume:

Mf =300 kg Total rear scale reading

Mr = 342 kg Total front scale reading

L = 2351mm Wheelbase

$H_s$ = 340 mm Height of CG of sprung mass above ground

hf = 95mm Front rc height

hr = 238 mm Rear rc height

$$642 * b = 2351*342$$

Giving b= 1255mm from the front wheel ie the length of the red triangle

# CG height above roll axis

- By similar triangles therefore:

$$\frac{143}{2351} = \frac{Z}{1255}$$

- Giving Z = 76 mm Where Z is the height of the triangle at the position of the CG
- The height of the CG above the ground H' is 340mm
- This give a value of

$$H = 340 - (76+95) = 169\text{mm}$$