University of Wales Trinity Saint David

Wales Institute of Science and Art

Integrating Project ACHA4007

Project second assignment

Updated by Jake Davies

2205290

May 2023

Contents

1 Introduction 1
2 Final design 1
3 CAD model 1
4 Calculations 4
4.1 Weight 4
4.2 Forces 4
4.3 Energy 5
5 Summary 6
6 References 7

[Figure 2.1] 1
[Figure 3.1] Angled view from front. 1
[Figure 3.2] Angled view from back. 2
[Figure 3.4] Birds-eye view 2
[Figure 3.3] Side view 2
[Figures 3.5 & 3.6] Front and back view 3
[Figure 4.2] 4

1 Introduction

This report is an evaluation of our soapbox design and experimenting on Computer Aided Design (CAD) with the best way to model it before starting the manufacturing process. It includes images and calculations to back up the findings during the process.

2 Final design

We chose 3 main designs that were all inspired by old F1 cars. And our final design is closely based off the McLaren MP4/1b. This was our choice because it had the most aerodynamic front nose cone design. We did not need the downforce that the front wing produced so we removed that from our design, but we chose to keep the rear wing as it would help keep the car more stable at higher speeds.

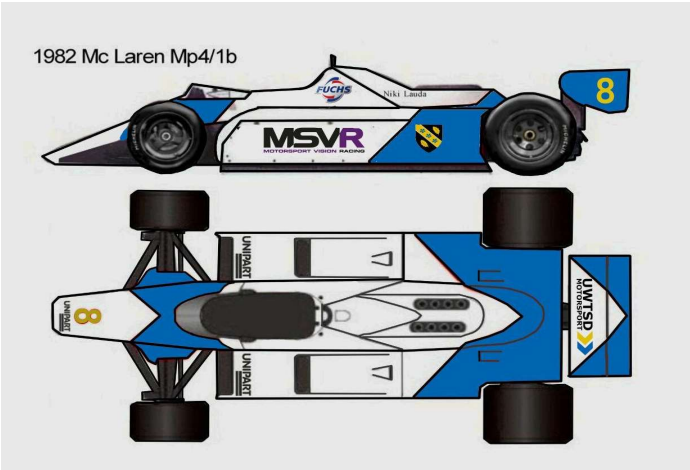

[Figure 2.1]

3 CAD model

The CAD model below (Figure 3.1-3.7) is based off our final design drawing (Figure 2.1).

This model was designed in 4 different parts: the spoiler, the “halo” roll bar, the wheels, and the body of the car itself. It was then assembled and aligned to produce the final design. The car we have chosen to design is quite complex and when thinking about manufacturing, we may consider making the bodywork with less edges and more of a smooth shape.

Below are 6 different views of the CAD model:

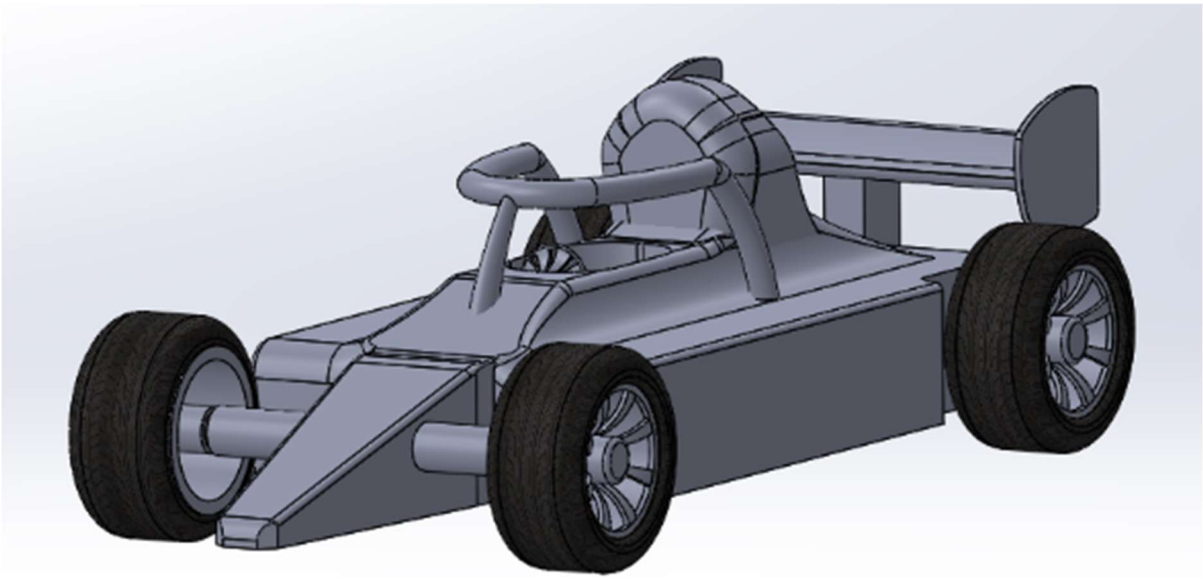

[Figure 3.1] Angled view from front.

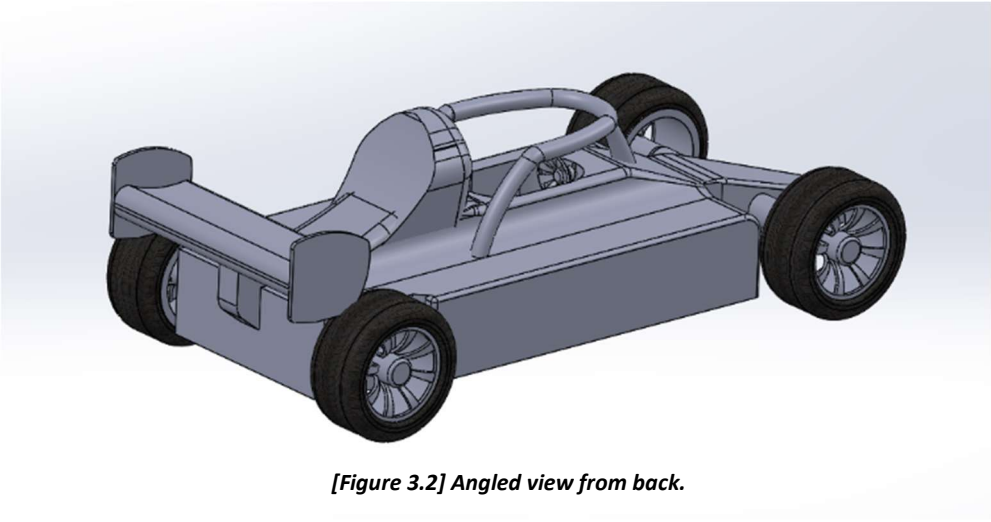

[Figure 3.2] Angled view from back.

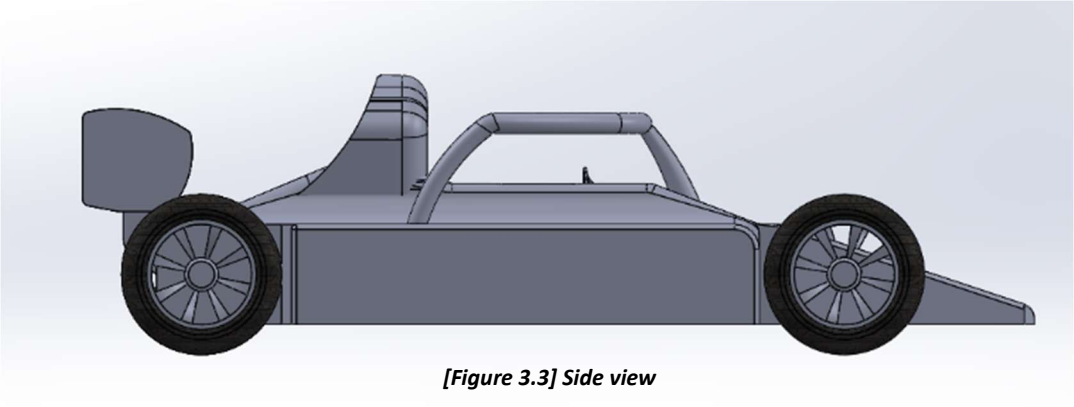

[Figure 3.3] Side view

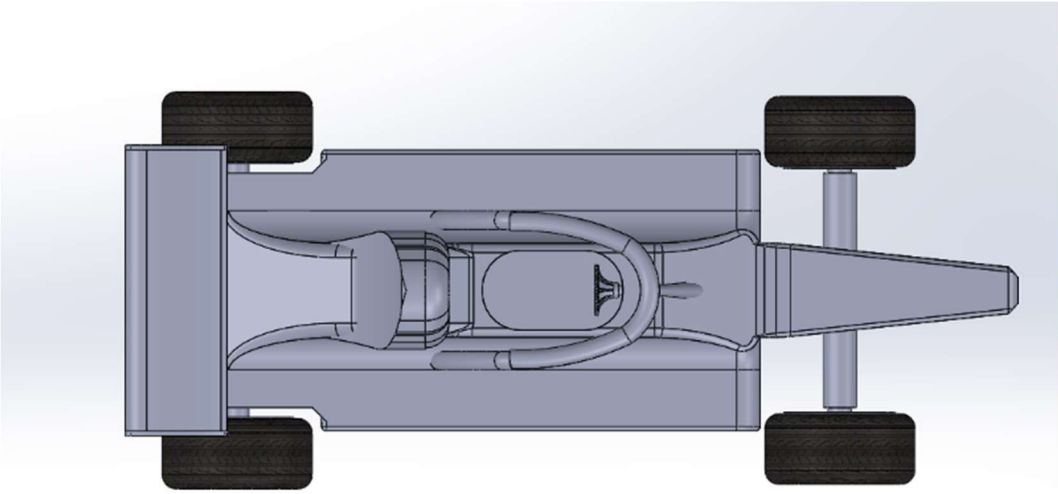

[Figure 3.4] Birds-eye view

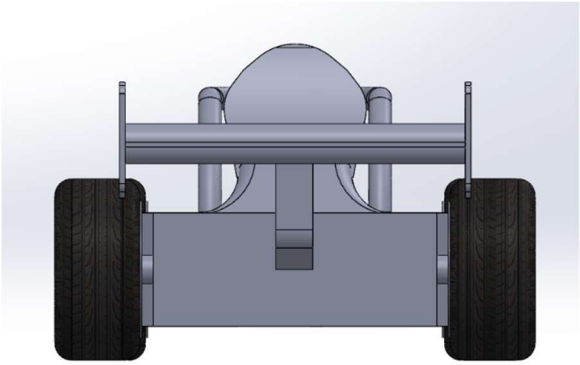

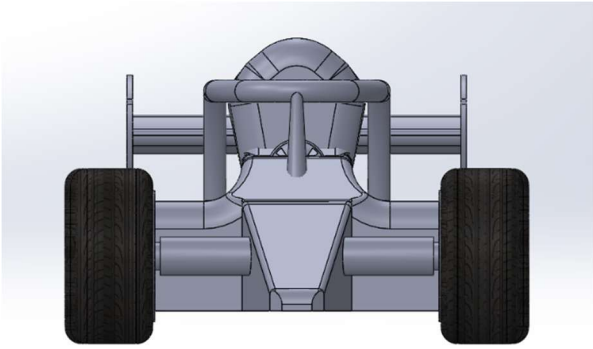

[Figures 3.5 & 3.6] Front and back view

While our design is good in some aspects, there are other parts that could be changed to make the car more suitable. Looking at the front and back view, the roll hoop is quite bulky. An improvement we could make would be adjusting the shape of the bodywork to more of a boat shape. This would be a simpler design and could actually be better from aerodynamic perspectives, as there would be less 'bulk' to create drag. The big "air intake" behind the seat is unnecessary and will also cause quite a lot of drag. In further design processes we should remove it and make the roll hoop a bit smaller, this would increase the cars maximum velocity.

4 Calculations

4.1 Weight

For our bodywork we are using fibreglass because it creates a strong shell that will protect the driver if the car hits anything. It will also make the car a bit more aerodynamic by producing a smooth surface for the air to slide over. It isn't super light like cardboard, but it has much more strength to it and we want to have some weight to make sure the car travels as far and fast as possible. Ideally it would weigh around 800-900kg. to further reduce the weight of the car we chose to go with smaller wheels and tyres as we don't need a high contact patch from the rubber to the road as there are not many corners on the track, this further suggests that we will achieve higher acceleration and top speed due to there being less friction force in action slowing the car down.

4.2 Forces

Thinking about forces included in this, we looked at how the angle of the slope that the car is released from would affect the acceleration. The larger the angle, the larger acceleration. This can be proven by:

$$F = mg \times \sin\theta \qquad F = ma$$

$$mg \times \sin\theta = ma$$

$$g \times \sin\theta = a$$

If θ=30, then sin θ= 0.5. And if θ=40, then sin θ= 0.64. Therefore, as g is constant, the larger θ, the larger a will be.

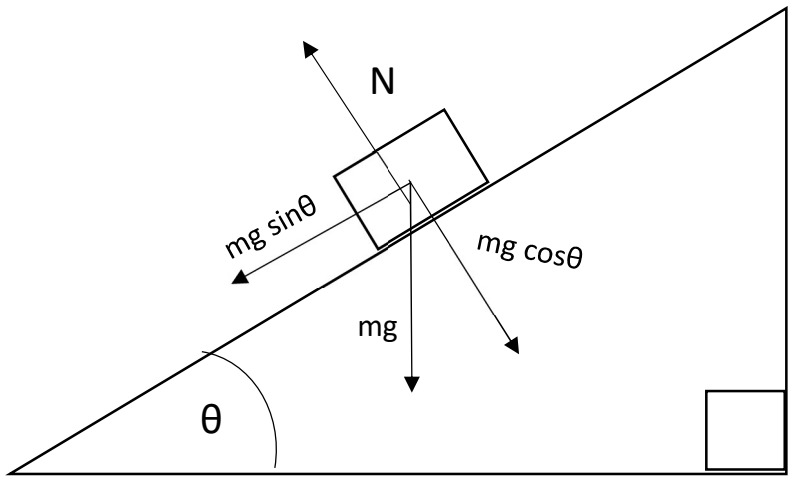

[Figure 4.2] Diagram to show the forces on the soapbox car

Calculate The total force acting down the plain.

F = Mg sin(x) N = Mg cos(x)

(x) = 30

Mg = Mass x Gravity = 850kg x 9.81

F = Mg sin(30) = 850 x 9.81 x sin30 = 4169.25N

N = Mg cos30 = 850 x 9.81 x cos30 = 7221.35N

Coefficient of friction = F/N = 0.58

Total force acting down the plain = (850 x 9.81 x sin30) + (0.58 x 850 x 9.81 x cos30) = 8357.64N

This is a hypothesis equation based of a rough estimate of what the weight of the car will be and what the angle of the starting ramp will be. Factors that could affect this equation would be the amount of downforce created by the car based on how smooth and even the airflow over the car is as a larger amount of downforce means the car is being pushed into the ground harder creating more friction between the tyres and road. Another factor could be the width of the tyres as a higher surface area would mean there is an increased level of friction as well.

4.3 Energy

When thinking about energy, Potential energy and kinetic energy are important, specially when an object released from rest is involved. At rest, the car will have maximum potential energy and no kinetic energy. But at maximum velocity, the car will have maximum kinetic energy but no potential energy.

<u>Potential energy:</u> PE=mgh (h being vertical height from centre of mass).
Multiply mass by acceleration of gravity by the vertical height from the centre of mass (of the car at start point). This will give us the potential energy and therefore the

<u>Kinetic energy:</u> KE=1/2 mv^2
Using this equation and the equation for potential energy, we can work out the maximum velocity the car will travel.

If: PE=KE

mgh= 1/2 mv^2

The masses cancel out of this equation so either the already calculated value of potential energy can be used, or the formula : $gh=v^2$ can be used instead.

(As we are assuming all potential energy is converted to kinetic energy, this calculation will only be an estimation as it won't account for any air resistance or drag that might occur.

Calculate the PE of the car.

M = 850kg

G = 9.81

H = 1.4m

PE = MGH = 850kg x 9.81 x 1.4 = 11673.9J

This is a hypothesis question based from theoretical values to create an idea and set expectations for the amount of energy produced from the vehicle.

5 Summary

When designing this soapbox car we focused on keeping the weight as low as possible. After looking at the calculations (forces involved), for future reference we may want to add more weight to the car. This would increase the acceleration of the soapbox (because F=ma). Also it is most likely that we will do another redesign before manufacturing that is a little simpler and will have less drag.

Some other calculations we could used are: Friction, centre of mass: to figure out where best to place the driver, and moment of inertia (reducing this will reduce energy loss (P. Gale, 2008).

6 References

- Soap Box Derby, Paul Gale (2008), *Physics Involved in Soap Box Derby,* Available at: www.midmosbd.org/sbd_physics.pdf