Struts

Structural members that carry compressive loads may be split up into to broad categories depending on their relative lengths and cross-sectional dimensions;

Columns – Short thick members that fail by crushing when the yield stress of the material is exceeded.

Struts – Long slender columns fail by *buckling* before the yield stress in compression is reached. This is caused by one or more of the following;

- The strut may not be perfectly straight initially
- The load may not be applied exactly along the axis of the strut
- One part of the material may yield in compression more readily that other due to some lack of uniformity in the material properties throughout the strut.

At values below the buckling load a strut will be in **stable equilibrium** where the displacement caused by and lateral disturbance will be totally recovered when that disturbance is removed. At the buckling load the strut is said to be in a state of **neutral equilibrium**, and it should be possible to gently deflect the strut into a sine wave provided the amplitude is kept small. This can be demonstrated with a ruler. In theory it is possible for struts to achieve a condition of **unstable equilibrium** with loads exceeding the buckling load, any slight lateral disturbance would then cause the strut to buckle. In reality buckling occurs as soon as the buckling load is reached due to the above points.

Note that struts can fail plastically as well as elastically, in this case the failure is irreversible. However, the following considers elastic buckling only.

Euler's theory

Struts with Pinned ends

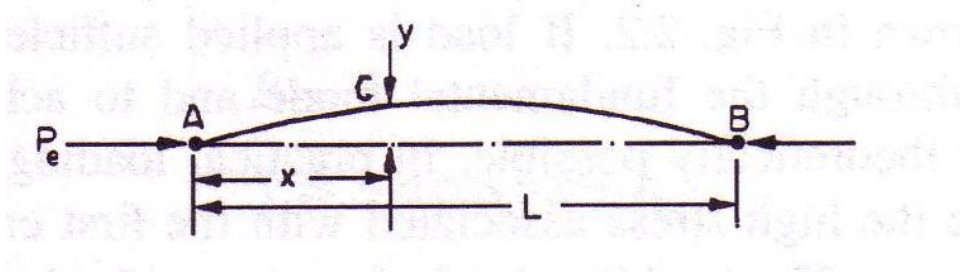

Consider the above strut subjected to a load P_e, causing a deflection y at a distance x from one end. As the strut is pin-jointed there can be no moment at either end.

The buckling force is given by;

$$P_e = \frac{\pi^2 EI}{L^2}$$

To get this we assumed that $L\sqrt{\frac{P_e}{L^2}} = \pi$. Mathematically, in the derivation this term could have been 2π, 3π, 4π…..etc. Theoretically there are an infinite number of solutions all of which satisfy $\sin L\sqrt{\frac{P_e}{EI}} = 0$, each of these will give the buckling load to cause a particular mode as shown below;

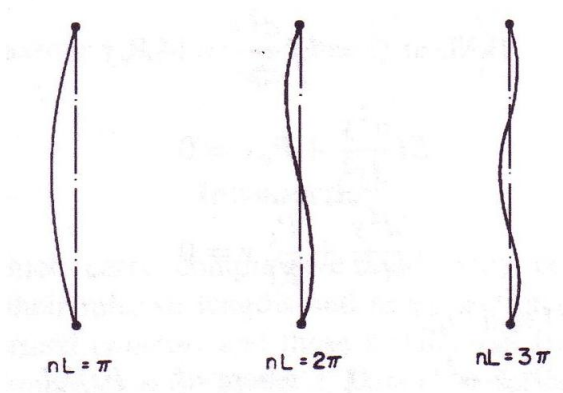

$P_e = \frac{\pi^2 EI}{L^2}$ gives the force for the first mode, or the **fundamental mode of bending.**

Struts with one end fixed and the other free

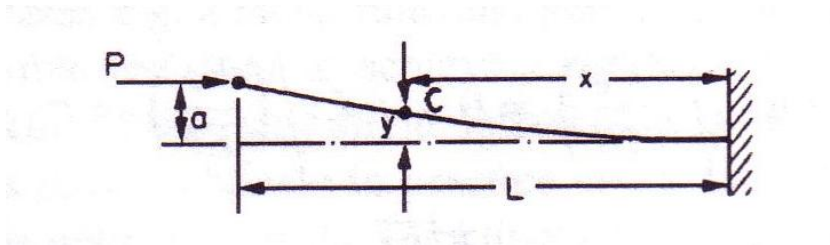

Consider the above strut subjected to a load P, causing a deflection y at a distance x from the origin at the fixed end.

The buckling force for the fundamental mode of bending is given by;

$$P_e = \frac{\pi^2 EI}{4L^2}$$

Struts with two fixed ends

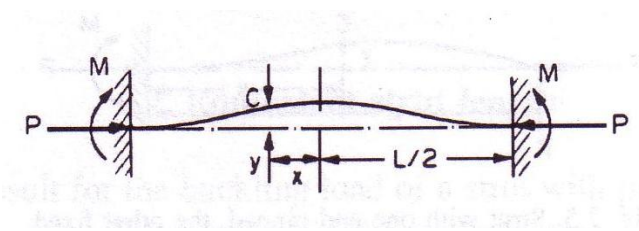

Consider the above strut subjected to a load P, causing a deflection y at a distance x from the origin at the centre.

The buckling force for the fundamental mode of bending is given by;

$$P_e = \frac{4\pi^2 EI}{L^2}$$

Struts with one fixed end and the other pinned.

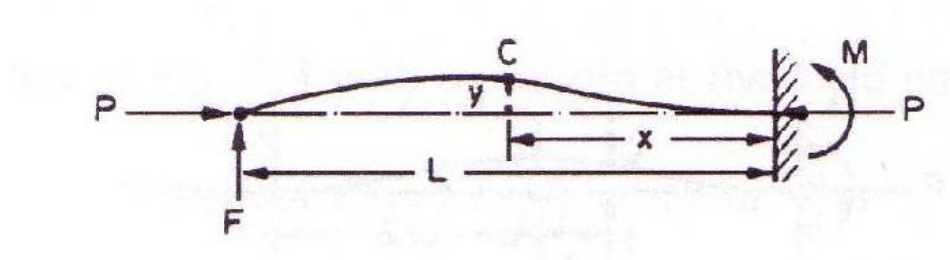

Consider the above strut subjected to a load P, causing a deflection y at a distance x from the origin at the built in end. Notice that since the end where P is being applied is constrained to the centreline of the unloaded strut, there must be a reaction force, F, at this point

The buckling force for the fundamental mode of bending is given by;

$$P_e = \frac{2\pi^2 EI}{L^2}$$

Equivalent strut length

The original equation for a strut with pinned ends was $P_e = \frac{\pi^2 EI}{L^2}$, this can be rewritten as;

$$P_e = \frac{\pi^2 EI}{l^2}$$

Where l is the equivalent length of the strut and can be related to the actual length of the strut depending on the end conditions. The equivalent length is the length of a simple bow (half sine-wave) in each of the strut deflections shown below. The above formula can thus be used in all cases with the equivalent length.

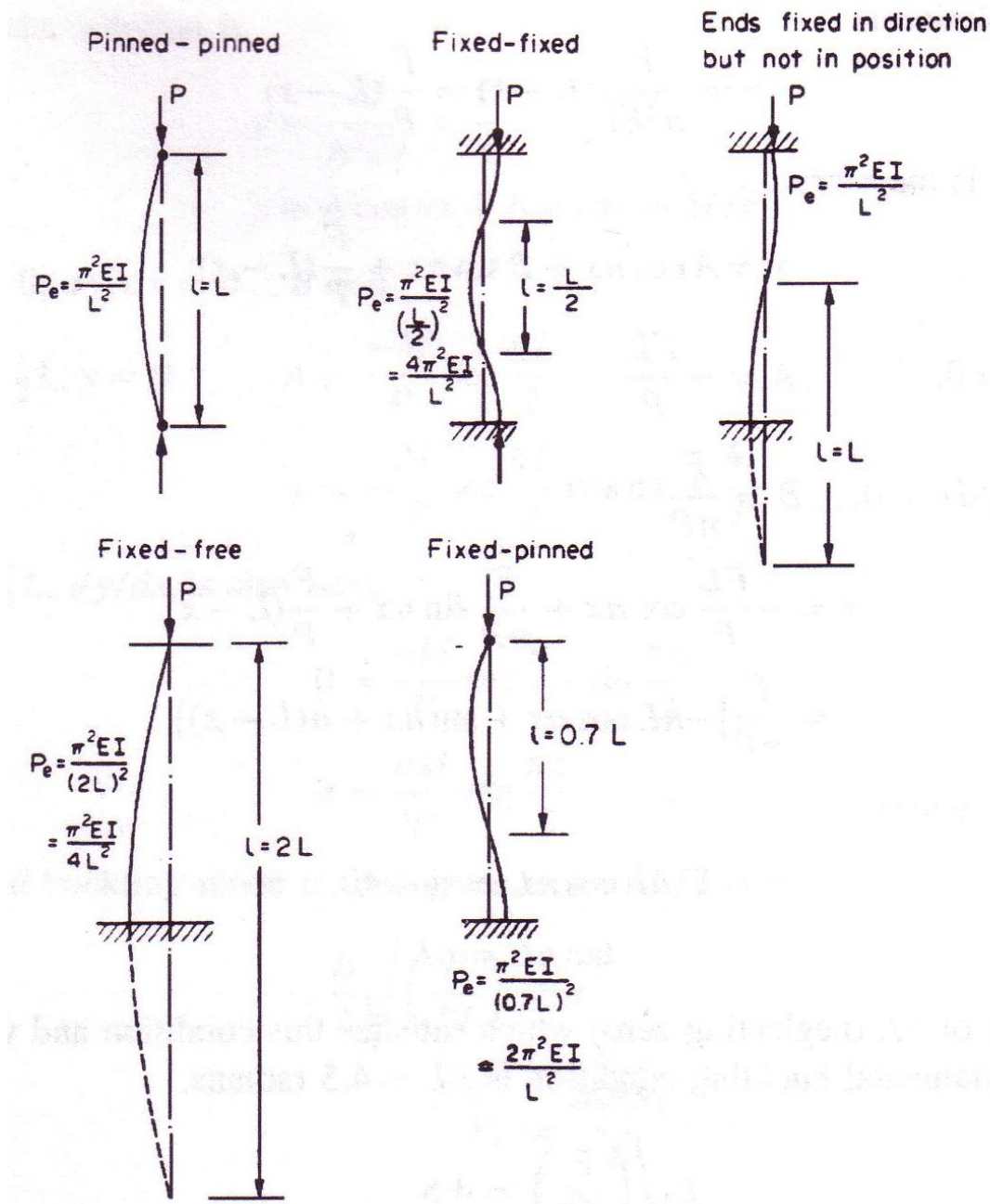

Examples

1. A steel column is to be a fabricated I-section shown below. It is 6m in height and is fixed at its lower end. It is to carry a design compressive load of 92kN at the central axis 0 of the section.
   a. Prove that with the upper end free $d^3+100d \approx 4.03x10^6$
   b. Prove that with the upper end pinned $d^3+100d \approx 0.5x10^6$
   c. Given the solution to the cubic equations in parts (a) and (b) are 159mm and 79mm respectively. Calculate the compressive stresses in each case.

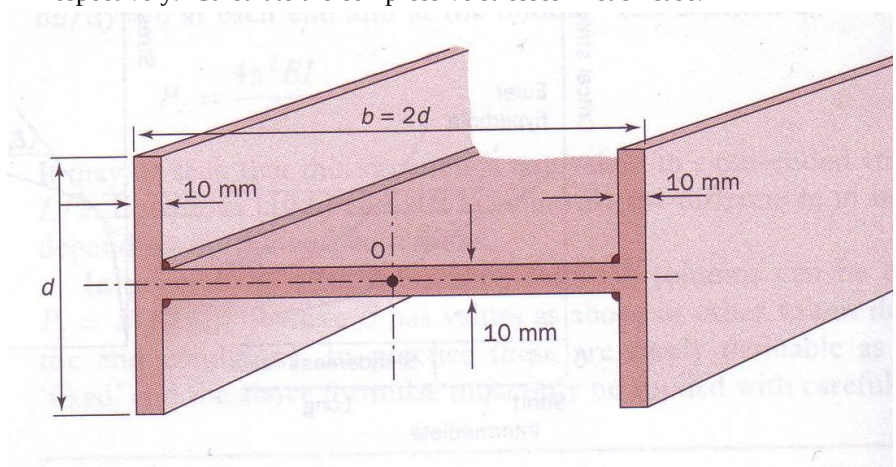

2.

A strut is 2 m long and has a rectangular cross section 30 mm x 20 mm. The bottom is built into a ground socket and the top is completely unrestrained. Given E = 200 GPa calculate the buckling load.

[2467N]

3.

Repeat the previous problem but with the strut is pinned at the top and bottom and not allowed to move sideways.

[9870N]

4.

A steel strut is 0.15 m diameter and 12 m long. It is built in rigidly at the bottom but completely unrestrained at the top.

Calculate the buckling load taking E = 205 GPa.

[87.3kN]

5. A shaft is made from alloy tubing 50 mm outer diameter and 30 mm inner diameter. The shaft is placed between bearings 3 m apart so that the ends are constrained to remain horizontal. The shaft also has to take a horizontal axial load. Taking E = 120 GPa determine the maximum axial load before buckling occurs.

Repeat this question using the equivalent strut length [140.5kN]

Slenderness Ratio

The **slenderness ratio** of a strut is defined as follows**;**

$$slenderness \cdot ratio = \frac{L}{k}$$

Where L is the length of the beam, and k is the radius of gyration , $\sqrt{\frac{I}{A}}$, which describes the distribution of the cross sectional area around the centroid.

Comparison of Euler theory with experimental results

So when looking at a loaded strut we need to consider the yield stress and the buckling load (amongst other things), however experimental data shows that when the slenderness ratio is between 40 and 100, neither predict failure. You can see from the below graph that for small values of slenderness ratio, using Euler theory to predict failure is unsafe, it is therefore useful to determine the limiting value of L/k below which Euler theory should not be used. This is termed the **validity limit**, and is taken to be the point where the Euler value equals the crushing strength. For low carbon steels with pinned ends this value is approximately 80. The validity limit is defined as follows, where C is a constant depending on the end conditions of the strut;

$$\frac{L}{k} = \sqrt{\left(\frac{C\pi^2 E}{\sigma_y}\right)}$$

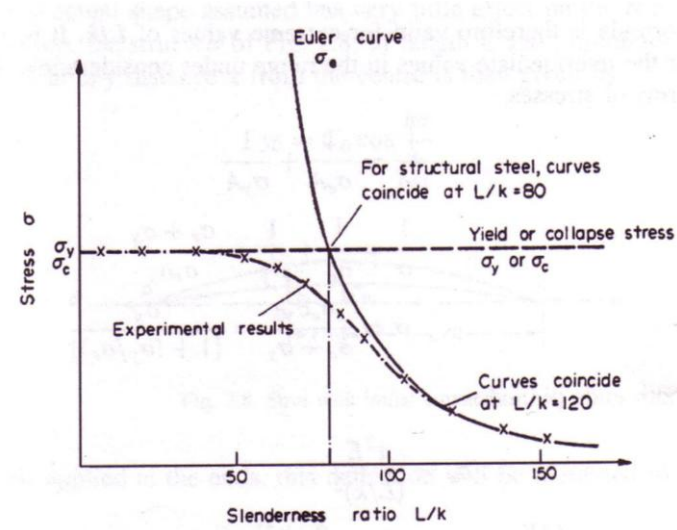

Other formula have therefore been derived to attempt to obtain closer agreement. The most widely used one being the **Rankin-Gordon formula**.

Rankin-Gordon Formula

The Rankin-Gordon formula combines the crushing load (P_c) and the Euler load (P_e) into the following formula;

$$\frac{1}{P_R} = \frac{1}{P_e} + \frac{1}{P_c}$$

For very short struts P_e is very large hence $P_R=P_c$ and for very long struts P_e is very small hence $P_R=P_e$. Thus Rankine is valid for the extreme values of L/k. It has also been found to be fairly accurate for the intermediate values considered above. If we rewrite the above formula in terms of stresses and re-arrange we can get the following;

Rankine Stress;

$$\sigma_R = \frac{\sigma_y}{1 + a(L/k)^2}$$

Rankine Load;

$$P_R = \frac{\sigma_y A}{1 + a(L/k)^2}$$

Where a, theoretically, is $\sigma_y/\pi^2 E$, but in reality is slightly different and is found experimentally depending on which material you are using and taking into account the end conditions. Some typical values are seen below;

Material	σ_y or σ_c (MN/m^2)	a	
		Pinned ends	Fixed ends
Low carbon steel	315	1/7500	1/30 000
Cast iron	540	1/1600	1/64 000
Timber	35	1/3000	1/12 000

N.B. a for pinned ends = 4 × (a for fixed ends)

Examples

1) Two 300 mm × 120 mm I-section joists are united by 12 mm thick plates as shown in Fig. 2.14 to form a 7 m long stanchion. Given a factor of safety of 3, a compressive yield stress of 300 MN/m^2 and a constant a of 1/7500, determine the allowable load which can be carried by the stanchion according to the Rankine–Gordon formulae.

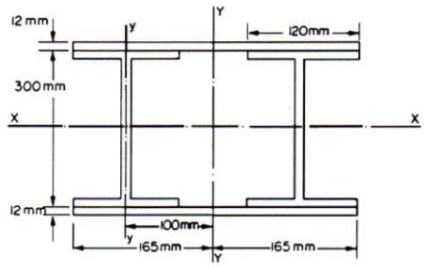

Fig. 2.14.

The relevant properties of each joist are;

$I_{XX} = 96 \times 10^{-6}$ m^4, $I_{YY} = 4.2 \times 10^{-6}$ m^4, $A = 6 \times 10^{-3}$ m^2.

[1.205MN]

2) Find the Rankine critical load for a strut with an I section as shown given σ_u = 325 MPa, E = 205 MPa and L = 16 m. The strut is built in rigidly at each end.

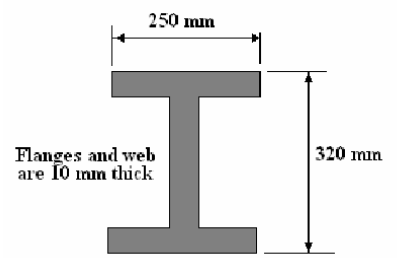

a=1/64000

[1.17MN]

Notes adapted from/further reading: Mechanics of Materials 2, E. J. Hearn