Prifysgol Cymru
Y Drindod Dewi Sant
University of Wales
Trinity Saint David

Upgrading a control system to improve efficiency and functionality

by

Tomos Hall

Supervisor: Dr Stephen Mosey

Project submitted as part of the requirements for the award of BEng (Hons) Electrical and Electronics Engineering

April 2025

Declaration

I, Tomos Hall, declare that I am the sole author of this Project; that all references cited have been consulted; that I have conducted all work of which this is a record, and that the finished work lies within the prescribed word limits.

This work has not previously been accepted as part of any other degree submission.

Date: 29/04/2025

FORM OF CONSENT

I Tomos Hall hereby consent that my Project, submitted in candidature for the *B.Eng.(Hons) Electrical and electronic engineering* degree, if successful, may be made available for inter-library loan or photocopying (subject to the law of copyright), and that the title and abstract may be made available to outside organisations.

Date: 29/04/2025

Acknowledgments

I would like to thank all the people who have supported me during my studies. My managers, Lee Williams, Chris Jenkins, and Greg May for allowing me day release each week to complete my degree. I would also like to thank my supervisors; Stephen Mosey and Gary Jones for their assistance throughout the project's duration. A special thanks to Simon Swallow for the free consultation regarding the design of burn-off ovens, an extremely beneficial starting point for my project. Finally, I would like to thank my fiancé, for her continuous support through my most stressful evenings.

Abstract

Research was carried out to determine the cause of efficiency loss in rewound motors. Poor control of the stripping process was determined responsible, leading to excessive heating of the motor core. The aim was to limit these efficiency losses, achieved by researching control systems to determine a more effective solution. By analysing the current system and comparing to more modern technological advances, a PLC controlled system was designed.

The designed system utilised an on/off control methodology to limit overheating of the motor. The PLC design incorporated a human machine interface (HMI) to allow operators to select a pre-programmed cycle. Authorised engineers were able to customize system parameters, improving control capabilities. A data logging function allowed for the constant improvement of cycle efficiency, creating a more environmentally friendly and sustainable oven. System faults were displayed on warnings and alarms screens, allowing for quick and effective fault finding.

A prototype was built to showcase the programs capabilities, utilising potentiometers for pressure and temperature control testing. The final prototype was function tested ensuring every operating scenario was carried. The final design met the aim and objectives of the project.

Recommendations were given to improve the temperature control methods to further improve accuracy and efficiency.

Table of Contents

Declaration 2
FORM OF CONSENT 2
Acknowledgments 3
Abstract 4
Table of figures 8
Chapter 1 - Introduction 10
1.1 Aim and objectives 12
Chapter 2 - Research and review of literature 13
2.1 Motor efficiency losses due to motor repair 13
2.2 Burn-off oven construction 16
2.3 Burn-off oven control systems 18
2.4 Upgrading the control system 21
2.5 PLCs background 22
2.6 Temperature control methods 23
2.6.1 Proportional-Integral-Derivative (PID) control 23
2.6.2 Fuzzy logic control 24
2.6.3 On/Off control 26
2.7 Research summary 27
Chapter 3 - Methodology 28
3.1 Project timescale 29
3.2 Project budget 29
3.3 PLC selection 29
3.4 Component selection 32
3.4.1 Temperature sensor 32
3.4.2 Relief panels 38
3.4.3 Door interlock 42
3.4.4 Water pressure sensor 43
3.4.5 Gas pressure sensor 44
3.4.6 Flow meter 45
3.4.7 Further components 45
3.4.8 Expansion module requirements 46
3.4.9 HMI screen 47
3.5 – Project costs 48
3.6 Prototype components 49
3.6.1 Thermocouple replacement 49
3.6.2 Pressure sensor replacement 49

3.6.3 Cold junction compensation module replacement 49
3.6.4 Program output indicators 50
3.6.5 Cycle control 50
3.6.6 Interlock and pressure relief panel replacement 50
3.6.7 Total prototype cost 51
3.7 software selection 52
3.8 Simulation method 52
3.9 Testing and evaluation methods 52
Chapter 4 – System design 53
4.1 Design requirements 53
4.2 Wiring diagram 54
4.3 Design considerations 56
4.3.1 Control choice 56
4.3.2 Warnings and alarms 56
4.4 Program Flowchart 58
4.5 Program fundamentals 60
4.5.1 Analogue input conversion 60
4.5.2 Temperature control 64
4.5.3 cycle time control 67
4.5.4 gas pressure monitoring 69
4.5.5 water pressure monitoring 70
4.5.6 Alarms and warnings bytes 71
4.5.7 Engineer input check 73
4.5.8 Afterburner ignition and reignition sequence 75
4.5.9 Main burner ignition sequence 77
4.5.10 Main burner and workpiece temperature control 79
4.5.11 System tags 80
4.6 HMI design 82
4.6.1 root screen 82
4.6.2 Engineer’s screen 86
4.6.3 Warning screen 87
4.6.4 Alarm screen 88
4.6.5 HMI tags 89
4.7 – Data logging 90
Chapter 5 – Implementation 92
5.1 Simulation 92
5.1.1 simulation testing 96
5.2 Prototyping 97

5.2.1 Final test 99
Chapter 6 – Operator's comments 100
6.1 Operator 1 100
6.2 Operator 2 100
6.3 Feedback analysis 100
Chapter 7 – Evaluation 101
Chapter 8 – Conclusion 103
Chapter 9 – Recommendations for future work 104
Chapter 10 – Reflection 105
References 106
Appendix 1 – Gantt chart 116
Appendix 2 – Full ladder program 118
Appendix 3 – Program Tags 133
Appendix 4 – Factory design 136
Appendix 5 – Prototype build 142
Appendix 6 – Logbook 149

List of figures

List of Tables

Chapter 1 - Introduction

Eriks is an industrial repair company specialising in rotating equipment such as motors, generators and gear boxes [1] [2]. This report focuses on a procedure used to repair AC stators. Three-phase induction motors are made up of two main parts, the stator, and the rotor [3]. The rotor is the spinning shaft of the motor, and the stator is the outer casing which holds the windings [3]. This is shown in Figure 1 [4] [5].

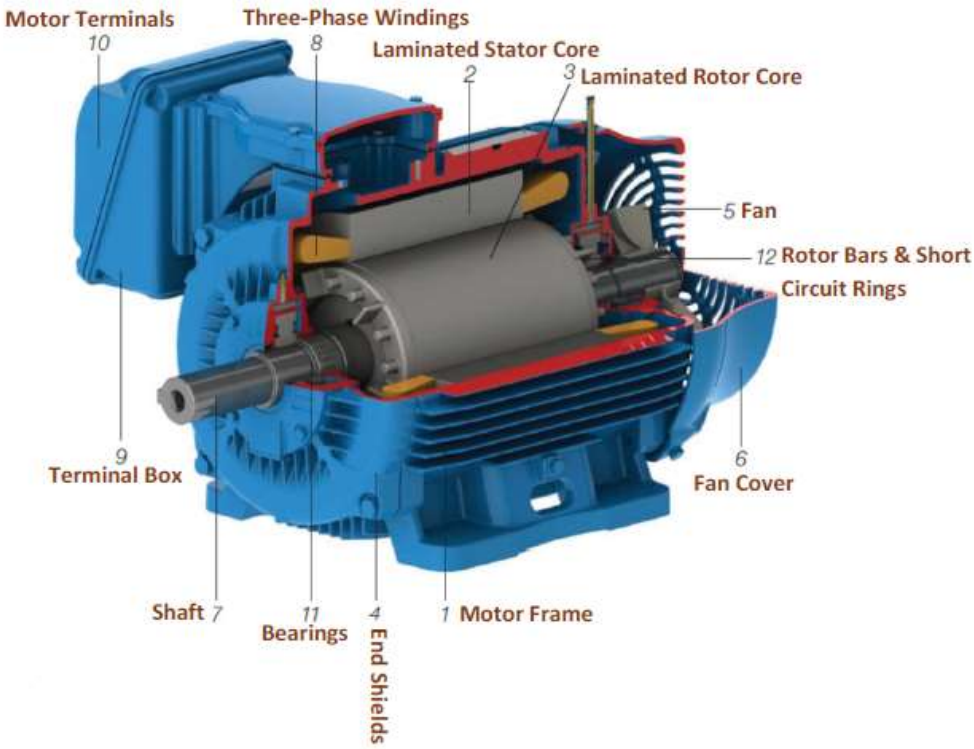

Figure 1 - Construction of a 3-phase Electric motor [4] [5]

The laminated stator core, labelled 2, encases the copper windings. The core is made up of thin iron sheets called laminations [3] [4] [5]. The laminations are individually insulated to prevent Eddy currents and hysteresis losses [6]. Eddy currents produce magnetic fields which could lead to hot spots in the core causing an insulation breakdown [3]. Protecting the integrity of the laminations is imperative to maintaining the motor's efficiency by limiting core loss [7].

When the windings fail, rather than replace the motor, customers often opt to rewind the motor [2]. This can be time consuming, the old stator windings must be detailed and removed to allow engineers to re-insulate and insert new copper [2]. Due to the varnish used in the manufacturing process, the original windings must be heated to breakdown the varnish and insulation [3, p. 97]. This is often achieved by use of a burn-off oven [2].

When rewound, motors often lose efficiency which can result in increased power losses by heat, decreasing the lifespan of the motor [8]. These efficiency losses are attributed to overheating during the stripping process [7]. This report analyses why efficiency losses occur during the rewind process and determines how they can be prevented. An effective solution was designed and built to improve the current workplace procedure. The new system allows for increased control over burn-off cycles, limiting efficiency losses and cutting down on energy costs and downtimes by delivering the most efficient burn-off cycle.

1.1 Aim and objectives

Aim:

- To limit efficiency losses in rewound motors.

Objectives

- To research why efficiency losses occur in rewound motors
- Analyse current workplace procedures to highlight shortcomings
- To analyse the functionality of a burn-off oven in the rewind procedure
- To design a new control system to limit efficiency losses
- To build a prototype to showcase the designed control system
- To implement proposed upgrade into the workplace

The following sections research into the objectives of the project, providing a clear direction for achieving the project's aim. The operation of burn-off ovens was analysed to determine the operating requirements, and where improvements could be made. Once design parameters were determined, an improved control system was designed. All hardware and software requirements were researched and explained. Once designed, a prototype was constructed to showcase the functioning solution. The overall project was then evaluated, expressing how the solution satisfies the aim and objectives.

Chapter 2 - Research and review of literature

This section details the research carried out to determine the project requirements, reviewing journals, reports, books, and manufacturers databases.

2.1 Motor efficiency losses due to motor repair

When motors fail due to insulation breakdown in the windings, they must be re-wound [2] [3]. Rewinding large stators is often the most economical option for a customer [9]. Cost and lead times make the purchase of a new replacement motor unattractive, resulting in motors being rewound [8, p. 62]. After rewinding, motors may exhibit a decrease in efficiency [8]. This can lead to increased energy loses to heat, which can in-turn cause insulation to breakdown faster, shortening the lifespan of the motor [8].

In 1995, the US department of energy [7] launched an investigation into why repaired motors were losing efficiency. It was discovered that there were four main causes for efficiency loss:

- High temperature burn-out of cores [7, p. v].
- Improper bearing replacement [7, p. v].
- Using smaller conductors for winding [7, p. v].
- Altering winding configurations [7, p. v].

Focussing on the primary finding, high temperature damage, they determined that 39% of workshop's ovens did not utilise water suppression systems [7, p. v]. Only 10% of workshops had temperature sensors placed at the motor cores [7]. 20% of control systems were never calibrated [7, p. 34]. These findings seem to illustrate that the main cause of efficiency loss was the inadequate control of the burn-off process. It was also determined that most workshops had the ovens set too high, some at 750°F (399°C), Figure 2 shows the temperatures settings in Fahrenheit and their percentages [7, p. 35].

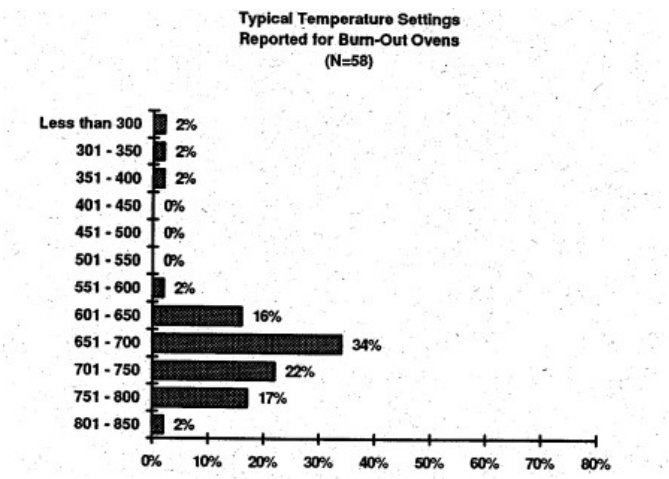

Figure 2 - Typical temperature settings of burn-off ovens [7, p. 35]

It has been recorded that a motor loses efficiency each time it is rewound due to the requirement of heat to strip the windings [8, p. 65]. Figure 3 shows the drastic effect higher temperature has on the efficiency [8, p. 65].

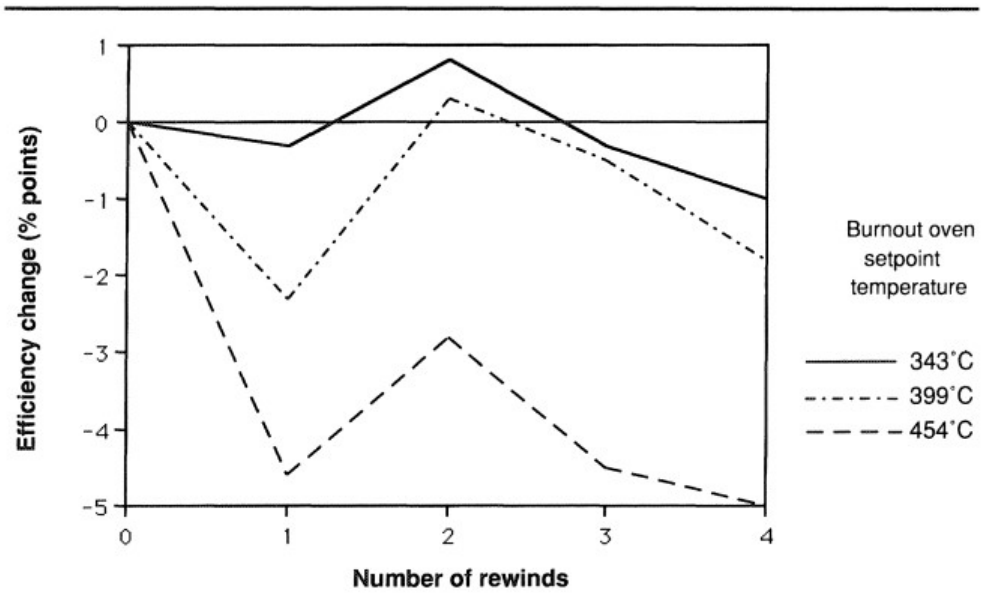

Figure 3 - Effect of different burnout temperatures on motor efficiency [8, p. 65]

This illustrates the requirement for a more reliable control system, capable of preventing temperatures exceeding the recommended limits [8, p. 65]. At 454°C, after four rewinds, the efficiency of the motor decreased 5%, compared to only 1% at 343°C [8, p. 65].

A 2003 study conducted by the Association of electrical and mechanical trades (AEMT) [10] determined that 350°C was too low a temperature to effectively break down the old winding insulation. 360-370°C was evaluated to be the best temperature to breakdown the old insulation, whilst limiting heat damage to the stator core [10]. This was repeated in their 2019 experiment, resulting in negligible core losses, shown in Figure 4 [10].

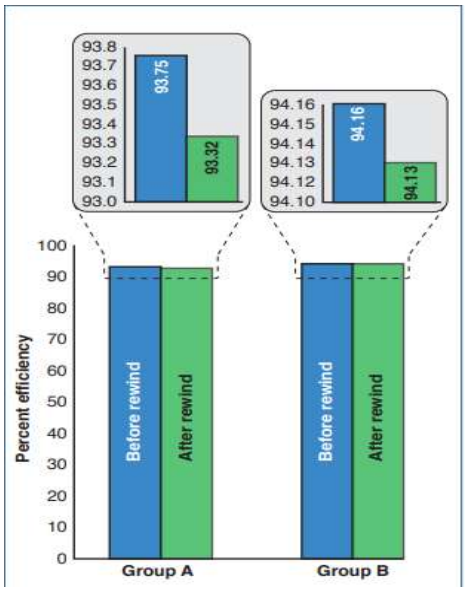

Figure 4 - Before and after efficiency measurements of stators burnt out at 370°C [10, p. 12]

The 'Good practice guide to maintain motor efficiency' from the AEMT recommends that a temperature probe be attached to the stator core to better monitor the cycle temperature [11]. It also states that temperatures over 400°C will damage the interlaminar insulation [11]. 370°C is given as the recommended temperature [11]. These figures are reiterated in the IEEE standards, meaning 370°C must be the temperature setpoint for the proposed control system [12, p. 31].

A consultation with the managing director of Rotary engineering, a burn-off oven manufacturer, revealed that their recommended set points are 800°C for the after burner and 370°C for the main burner [13]. This reiterates the industry standard for oven set points [12, p. 31].

2.2 Burn-off oven construction

As discussed, the burn-off oven is a vital piece of equipment in the rewind process. The oven regulates a specific environment to burn-off the varnish and insulation without melting the copper coils or damaging the stator [14]. Using an after burner and a water suppression system, all pollutants are burned off through a process called pyrolysis [14] [15].

'Utilising two enclosed combustion chambers, fuelled by natural gas, the burn off oven allows the motor to be heated without contact of direct flame [14]. Waste materials such as varnish and insulation are broken down and the vapours produced are burnt off in the second combustion chamber by the afterburner [13] [14]. To control the rate of combustion, allowing time for pollutants to be burnt off, water jets are utilised to prevent the motor overheating [13] [14]. Once the cycle is finished, the varnish and insulation are reduced to ash and all pollutants are exhausted as carbon dioxide and water vapour [13] [14]. The coils can then be easily removed from the stator to continue the rewind process [13] [14]. Diagrams illustrating the Burn-off oven function are shown in Figure 5 and Figure 6 [15] [16].' [17].

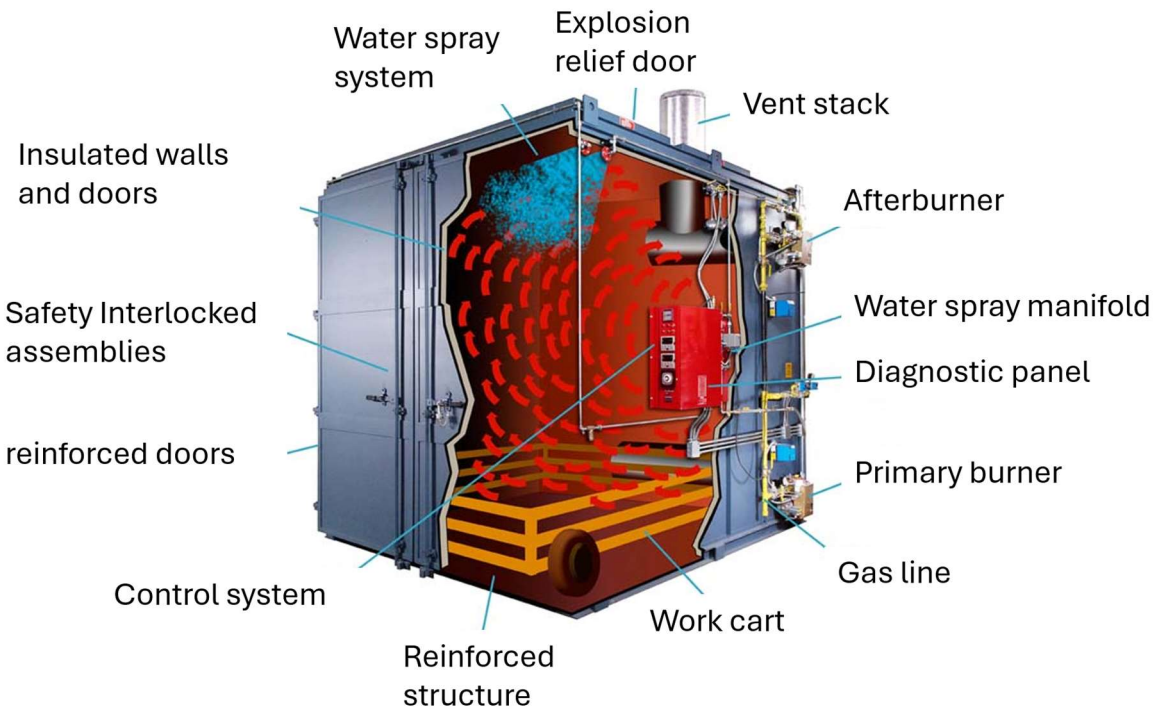

Figure 5 - Burn- off oven construction [15]

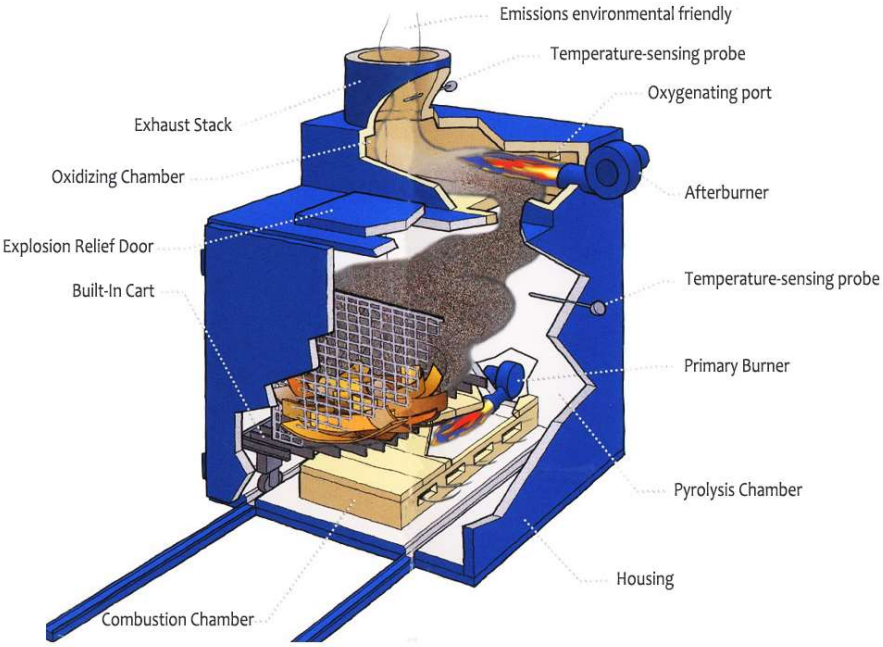

Figure 6 - Burn off oven construction [16]

2.3 Burn-off oven control systems

It has been determined that proper control of burn-off ovens is paramount in limiting core loss. The oven used at Eriks is controlled by a relay system, shown in Figure 7 [2]. This system uses an array or relays, manual timers, and temperature controllers to regulate the oven's environment.

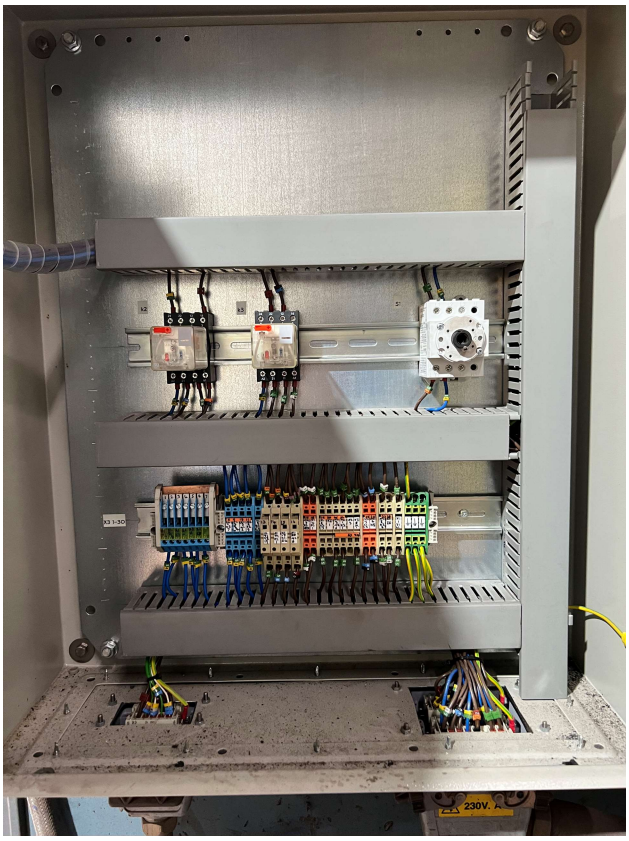

Figure 7 - Current oven control system [2]

Manufactured in 1999, this system has provided a moderate level of control over the temperatures and timings of the oven. The system requires regular maintenance as the aging relays approach the end of their useful life. Figure 8 illustrates the useful life cycle of relays [18].

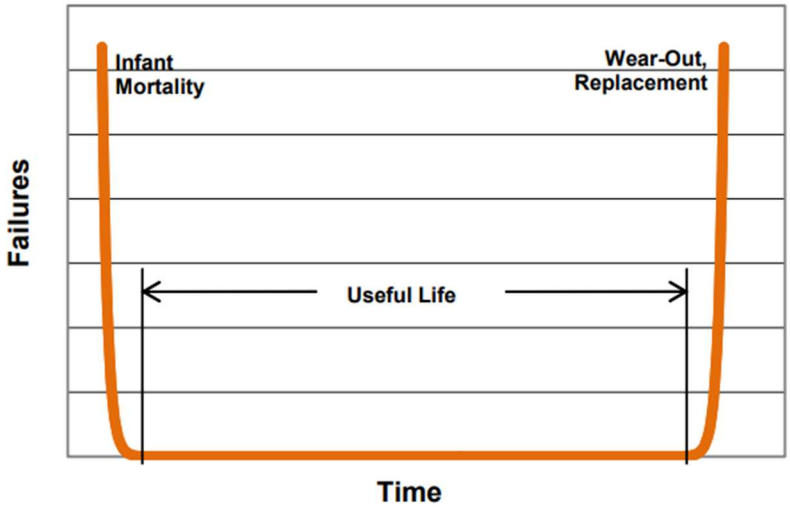

Figure 8 - Lifecycle of relays [18]

This type of system can be difficult to fault find, relying on complex wiring digrams similar to the diagram in Figure 9 and Figure 10 [19]. This diagram is for a similar model to the oven used at Swansea and showcases the difficulties presented for maintainence on a relay controlled system [19].

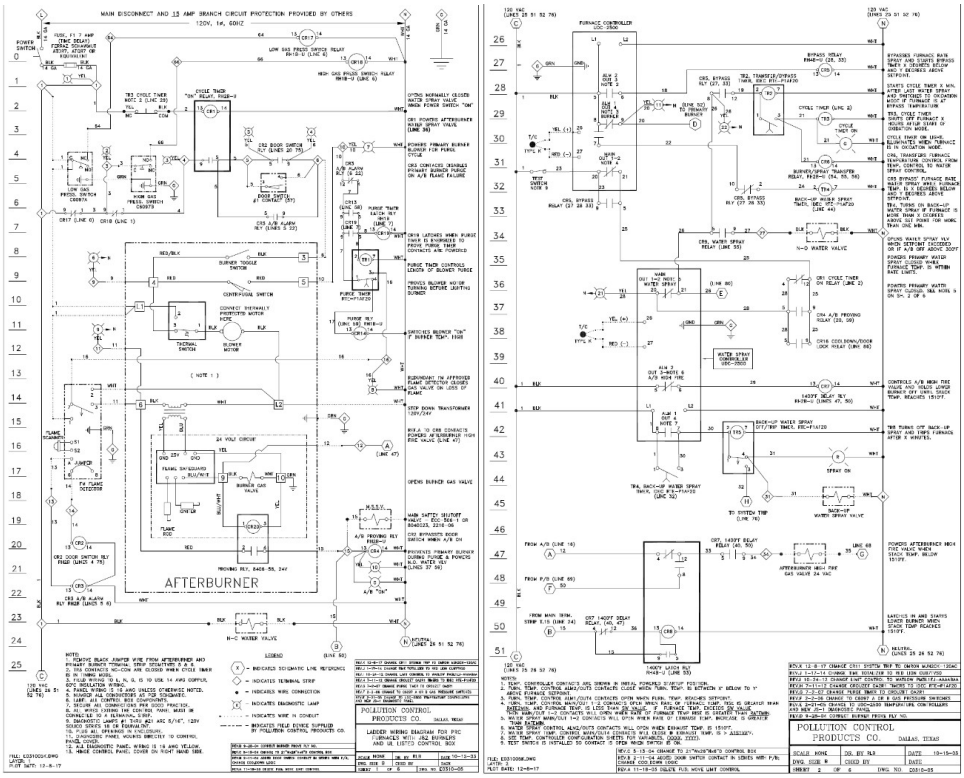

Figure 9 - Relay wiring diagram for PCP burn-off oven [19]

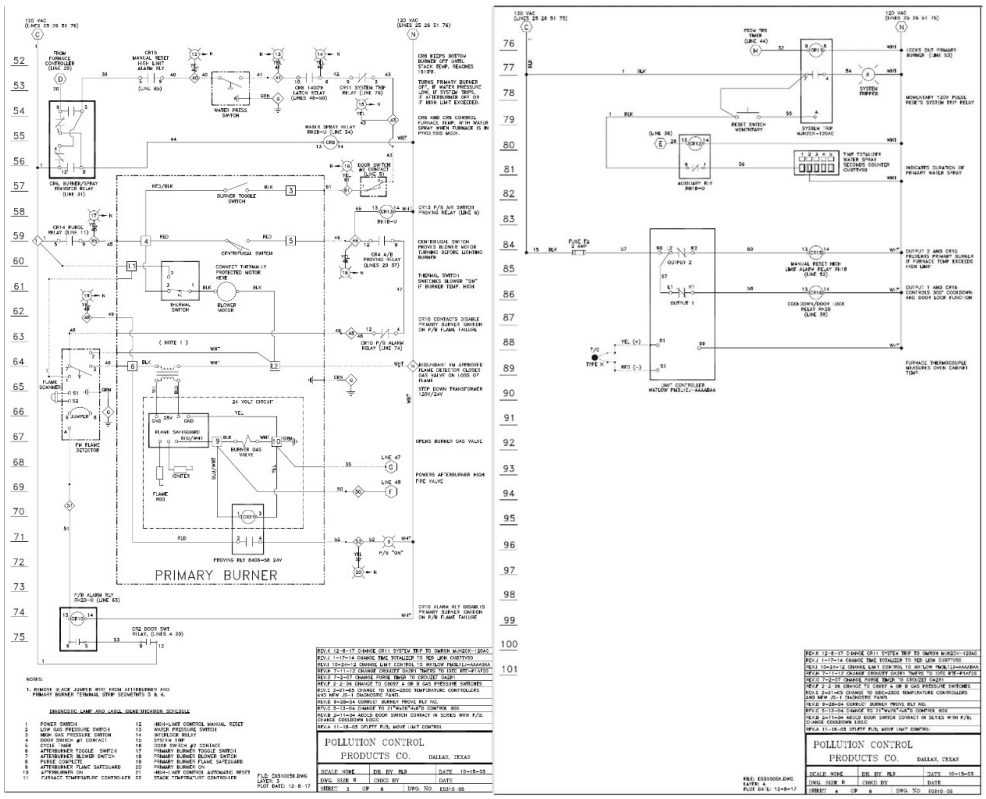

Figure 10 - Wiring diagram continued [19]

Manufacturers like Whitelegg, Rotary and Longworth, prefer programmable logic controllers (PLC) systems for better control and interface [20] [21] [22]. PLCs allow the operator to run pre-programmed cycles and to create new cycles for any application [20]. They also fasilitate data-collection, allowing the engineer to determine the most efficient and cost-effective process to run for each individual application [20]. The PLC can be used to log faults and errors, allowing Whitelegg and other companies to offer full on-line support [20].

Whitelegg's PLC oven offers comprehensive control, displaying temperature/time graphs, heating ramps and cycle [20]. This gives the operator the ability to review and compare different oven cycles to perfect the pyrolysis [20]. The PLC also allows for the monitoring of fuel consumption, meaning the most fuel-efficient burn cycle can be calculated [20].

Another benefit of Longworth's PLC oven is its online connectivity [22]. This allows maintenance engineers to fault find remotely, saving the customer downtime and call out charges [22]. Data reports can also be transmitted back to the manufacturer, allowing constant improvements to be made [22].

2.4 Upgrading the control system

'As the best method for limiting efficiency methods is temperature control, upgrading the relay system to PLC would be beneficial. Retrofitting a modern control system would increase efficiency and capabilities of the oven, whilst providing a cost-effective alternative to purchasing new equipment [23]. Upgrading machinery delivers the same efficiency and flexibility at a much lower cost. Producing a more sustainable workplace by avoiding obsolescence of machinery and extending equipment lifespans [24].

PLCs are one of the leading control methods in industry [25]. Additional control components required in a relay system, like counters, timers and controllers, are included within the PLC, producing a much simpler wiring system [26] [27]. PLC programs are designed to mimic the original relay ladder logic, making the upgrade straightforward [28, p. 1192] [29]. Providing higher reliability and decreased downtime, PLCs allow faults to be detected and flagged more effectively, allowing for faster repairs [25] [30].' [17]

2.5 PLCs background

'PLCs are used throughout industry, often utilised in manufacturing, automation, and process control [31, p. 7]. Controlled by a microprocessor, storing instruction in non-volatile memory, PLCs can control operations using timers, counters, arithmetic, and logic [31, p. 5]. PLCs use sensors and switches as inputs to prompt programmed outputs. Memory coils are used to store inputs and activate further instructions in the programmed code [31, pp. 5,6] [32] [28]. To execute the code, the controller performs a scanning cycle which stores programmed inputs and outputs into an input image tape. Once the program has been scanned, the CPU links the inputs and outputs to the instruction set in the program. If an input from the table is detected the required instruction set is completed [32] [33]. This cycle repeats continuously yielding a reliable and efficient automated process [28].

PLCs were designed to replace relay circuits [34, pp. 329-333]. Relay control required a complex wiring diagram known as ladder [34, pp. 329-333]. PLC programming was designed to follow the same format, producing a language known as ladder logic. Figure 11 is a ladder example; rung one illustrates a normally open (NO) input connected to an output coil. Rung two illustrates an AND logic function [35]. The output of rung two can only be energised when both NO inputs are energised. The third rung illustrates an OR logic function, where either of the inputs can energise the output [31, pp. 121,122].' [36] .

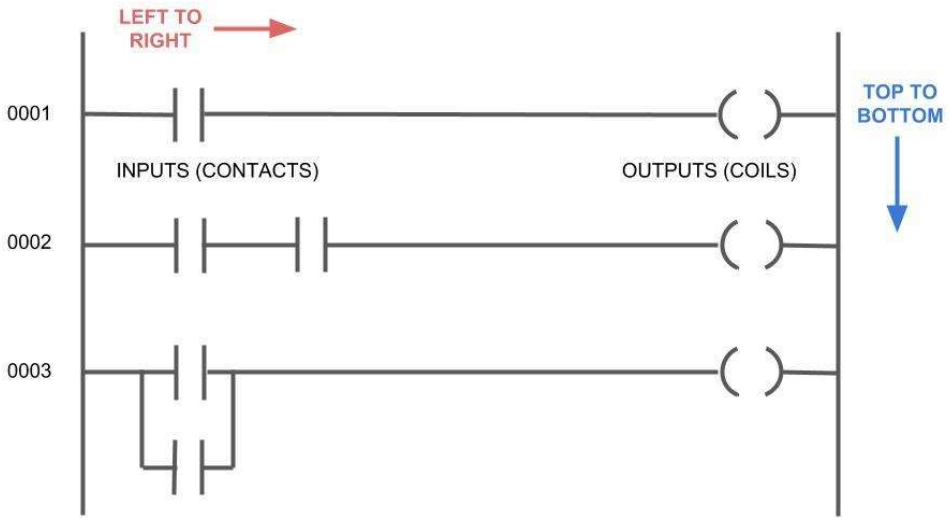

Figure 11 - Ladder program example [35]

2.6 Temperature control methods

There are many control methods used throughout industry. To manage the temperature of the burn-off oven, the most suited method was selected providing accurate and reliable control of the system.

2.6.1 Proportional-Integral-Derivative (PID) control

Proportional-Integral-Derivative (PID) is a commonly utilised control technique used in around 90% of electric furnace temperature control systems [37]. PID regulates a variable using a combination of three separate control methods [38] [39]. Each of the three units can be individually tuned to meet systems requirements [40]. Figure 12 illustrates the function of a PID controller [39]. Figure 13 illustrates the characteristics of a PID controller in graphical form [41].

The proportional output is produced using the difference between the set point and the measured temperature [40]. This is known as the proportional error signal [39]. The proportional error signal can be tuned by altering the gain constant, K_P, the equation is shown in Figure 12 [39] [40].
The integral output follows a similar formula, calculating the integral of the proportional error signal, guaranteeing zero steady state errors [40]. This section is tuned using the time constant T_I, shown in the integral section of Figure 12 [39] [40]. The derivative output calculates the derivative of the proportional error signal [40]. This section is tuned using the gain parameter K_D, shown in the derivative portion of Figure 12 [39] [40]. The derivative section adds stability to the system [38]. PID controllers produce accurate variable monitoring but require difficult tuning [42].

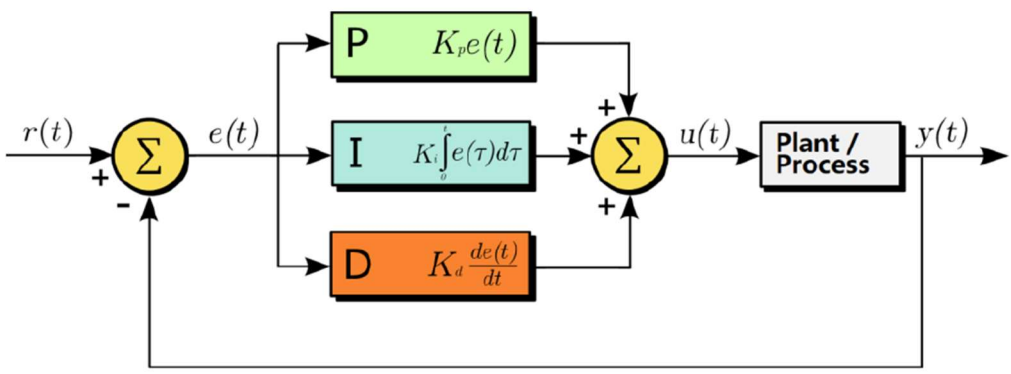

Figure 12 – PID control [39]

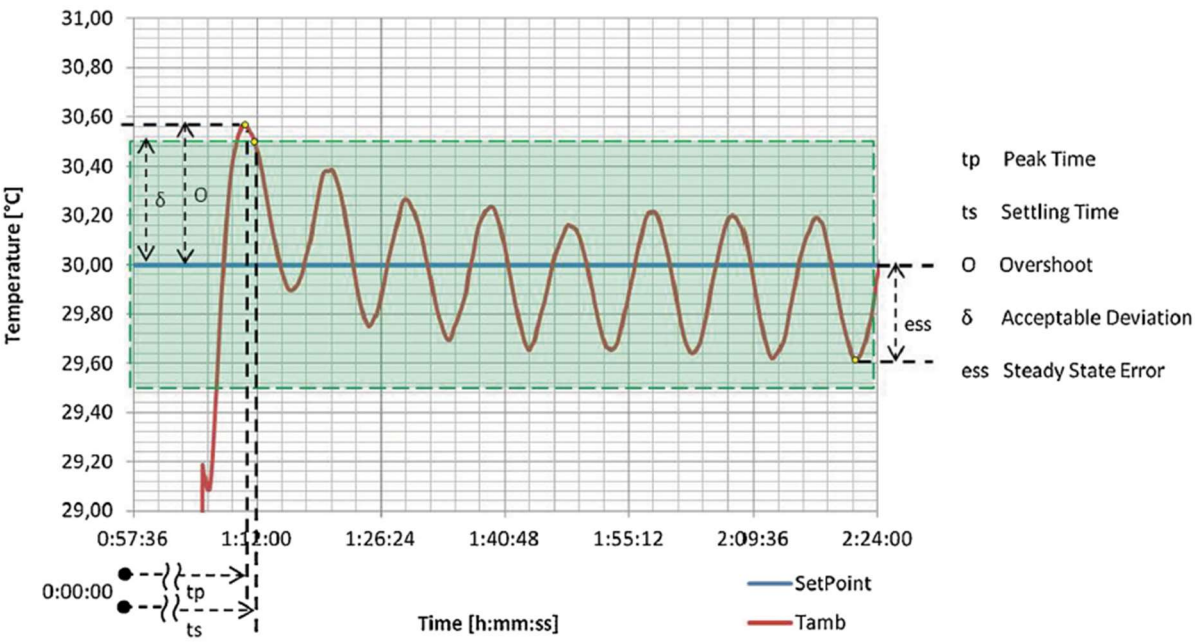

Figure 13 - PID controller characteristic curve [41]

2.6.2 Fuzzy logic control

Fuzzy logic is a type of artificial intelligence control system often used in temperature control [43]. Rather than using traditional logic, on or off, fuzzy logic follows a set of rules designed in a more verbal fashion [44]. An example of fuzzy logic parameters is shown in Figure 14, fuzzy logic parameters are set to provide a range of functions [45]. Rules are then defined to govern the fuzzified parameters, using the defined rules and set parameters the controller acts based on a control matrix as shown in table 1 [45].

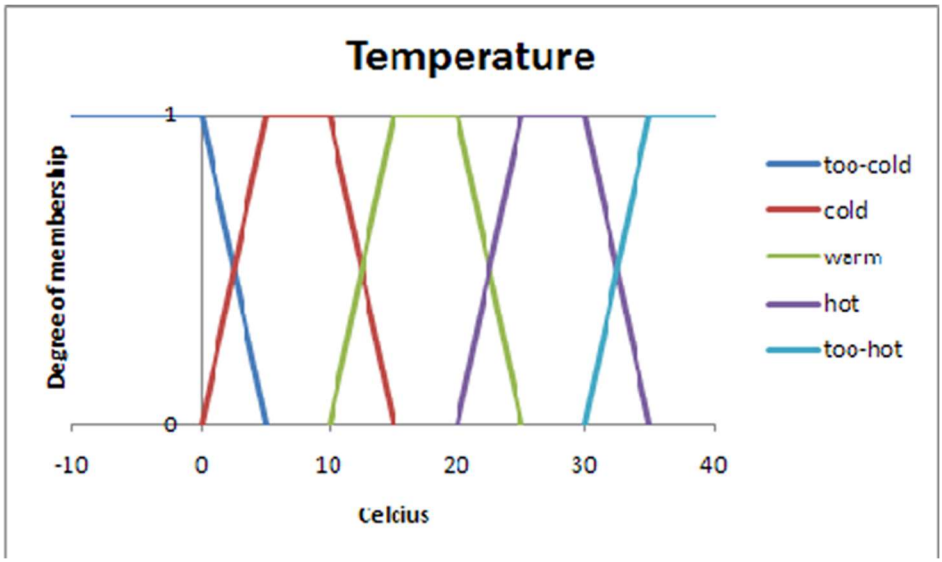

Figure 14 - Fuzzification of numerical values into verbal parameters [45]

If the target temperature was warm and the measured temperature was hot the controller would select cool and perform the corresponding action [45].

Table 1 - Fuzzy rules action matrix [45]

Temperature/target	Too-cold	Cold	Warm	Hot	Too-hot
Too-cold	No-change	Heat	Heat	Heat	Heat
Cold	Cool	No-change	Heat	Heat	Heat
Warm	Cool	Cool	No-change	Heat	Heat
Hot	Cool	Cool	Cool	No-change	Heat
Too-hot	Cool	Cool	Cool	Cool	No-change

This type of control can be used in addition to PID control to produce a self-adjusted PID controller. Rather than tuning the PID manually, all scenarios are implemented into fuzzy rule matrixes creating an automatically tuned PID [46]. This results in a more accurate controller as illustrated in Figure 15 [46].

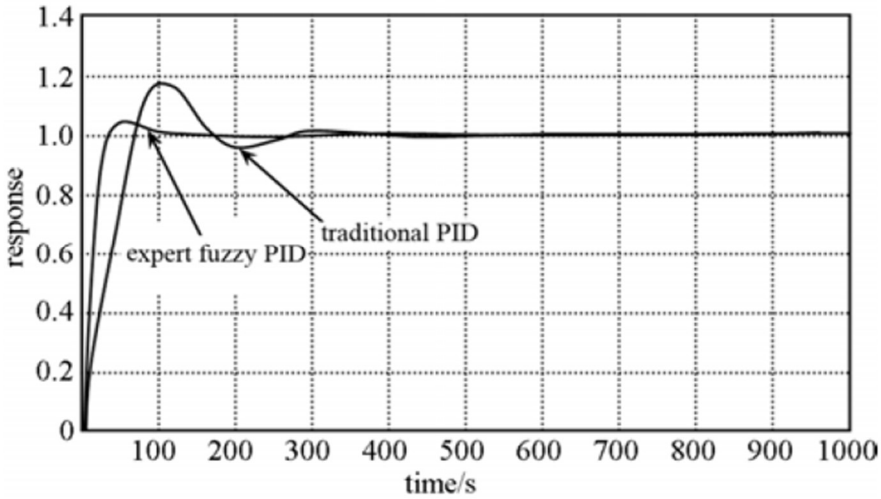

Figure 15 Fuzzy PID vs PID [46]

2.6.3 On/Off control

On/off control is the simplest control method, abiding the laws of basic logic [47]. When the variable hits the set high point the controller turns off [47]. When the set low point is hit the controller turns back on [47]. The buffer zone created between the high and low points is called hysteresis [47]. The midpoint of the hysteresis is the desired set point of the variable [47]. The characteristic of this type of control is shown in Figure 16 where Δy is the hysteresis and the red line is the desired set point [48].

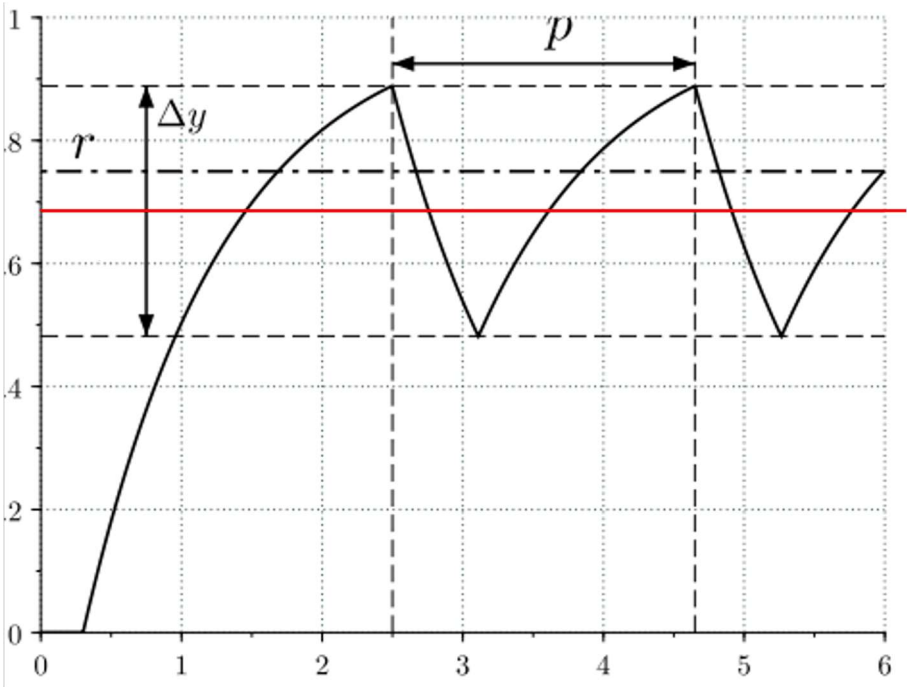

Figure 16 - Characteristics of an on/Off controller [48]

2.7 Research summary

To limit efficiency losses after rewind, the temperature of burn-out must be correctly controlled. The temperature of the main chamber mustn't exceed 370°C and the afterburner must be kept at 800°C to burn off pollutants [12, p. 31]. To control this accurately, a PLC system should be implemented providing better control, fault finding and data logging capabilities [20]. Retrofitting a new control system would prolong the life of the existing equipment without excessive investment [24].

To control the temperature a control method must be selected. PID control is an effective method combining proportional, integral, and derivative units to produce an accurate and reliable variable controller [38] [39]. Fuzzy logic control using a programmed artificial intelligence can be combined with PID to limit deviation from the set point [46]. On/Off control is the simplest and easiest to implement, when the temperature hits a low point, the controller turns on until the high point is met and it turns off [47].

The project must produce an effective prototype to showcase how a PLC system would be beneficial. The budget must be kept to a minimum as the project should serve only as a proof of concept. The program must be written in ladder and an HMI screen, fault screen and engineer's screen must be produced.

Chapter 3 - Methodology

This chapter details the justification of the project methodology as well as planning and preparation. The project followed a mixed methodology between prototyping, Figure 17, and waterfall, Figure 18 [49].

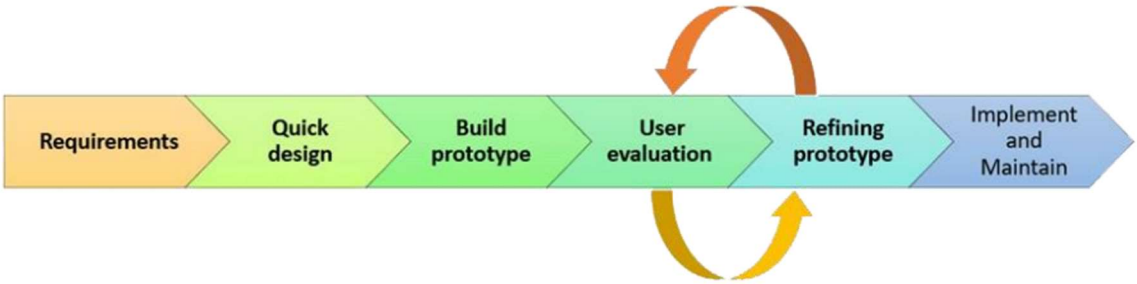

Figure 17 - Prototyping development methodology [49]

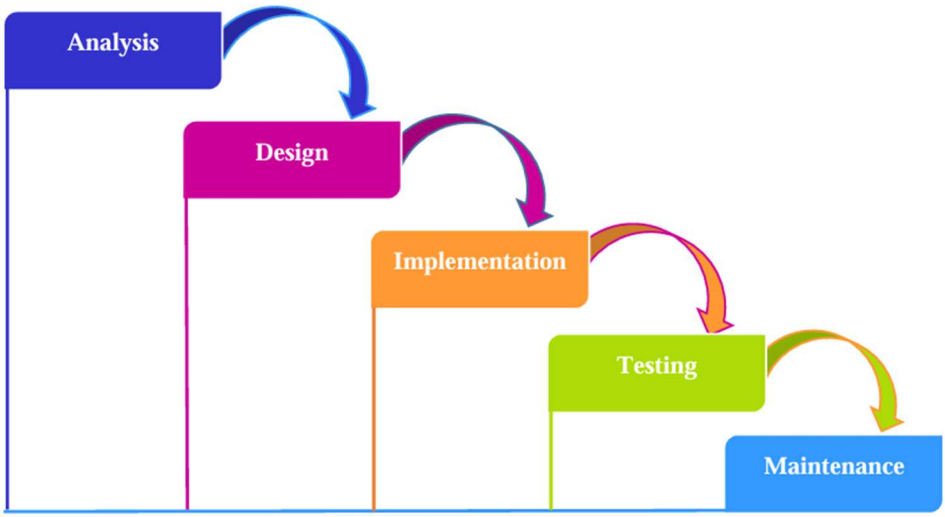

Figure 18 - Waterfall development methodology [49]

The project specifications were analysed, allowing for the design requirements to be considered. From here, the components and equipment were chosen and the design configured. The simulation was then to be constructed and evaluated allowing for refinement, falling into the prototyping method [49]. Once refined, the simulation was then used to build the practical prototype which led to implementation and testing, following the waterfall method [49]. This was the most effective methodology for the chosen project.

3.1 Project timescale

The project was to be completed in the timescale as shown in the Gantt charts in Appendix 1. The Gantt chart was updated throughout the project, reflecting problems and changes that occurred throughout the duration. All design choices made had to account for these set deadlines. To help keep track of tasks, a logbook was kept shown in Appendix 6.

3.2 Project budget

The project had to be completed within the budget. As the project was completed outside of workplace funding, the budget was set to £250. This was the bursary amount available from the university for course costs. All design choices had to consider the project budget.

3.3 PLC selection

The aim of the project was to present an affordable prototype solution to the aging relay control system utilising a PLC. Choosing the right PLC was important to ensuring the project met the required specifications. Table 2 compares several popular PLC options [50] [51] [52] [53] [36].

Table 2 – Comparison table of PLC options [50] [51] [52] [53] [36]

Manufacturer	Model	Price	Supply	Inputs	Outputs	Program capacity	Communication port	Picture
Siemens	S7-1200	£512.40	24V	14	10	75kB	1	
Omron	CP1L	£724.20	24V	18	12	10K steps	1	
Allen-Bradley	Micro870	£1,133.28	24V	14	10	128kB	3	
Mitsubishi	iQ-F	£925.20	100-240V	16	16	120kB	2	

The siemens S7-1200 is a favourite for its ease of use and straight forward software [50]. The TIA portal allows for efficient programming [50]. The S7-1200 is a more affordable option, making it more accessible for prototyping projects. Table 3 provides pros and cons [50] [36].

Table 3 – Pros and cons of Siemens S7-1200 [50] [36]

Siemens S7-1200	
Pros	**Cons**
Affordable	No wireless communication
Easy to program	Smaller program capacity
Compact	Single communication port
Low Voltage	Lower outputs
Expandable	

The Omron CP1L is a competing PLC, offering many of the same features [51]. It is used throughout industry for many automation applications. Its competitive price makes it an appealing controller for smaller projects. Table 4 displays some pros and cons of the Omron CP1L [51] [36].

Table 4 - Pros and Cons of Omron CP1L [51] [36]

Omron CP1L	
Pros	**Cons**
AC or DC supply	Lower program capacity
Higher No. inputs	Single communication port
Competitively priced	

The Allen-Bradley Micro 870 is popular in industry automation. It is more expensive, aimed for mid-size automation projects. The software required to program the micro 870 is Rockwell automation workbench. This software is renowned throughout the programming community as difficult to use [54] [52] [36] . Pros and cons for the Allen-Bradley micro 870 are shown the Table 5.

Table 5 - Pros and cons of Allen-Bradley Micro 870 [52] [36]

Allen-Bradley Micro 870	
Pros	**Cons**
Low voltage	Expensive
Multiple communication options	Lower No. of outputs
Multiple programming languages	

Mitsubishi PLCs are utilised throughout industry for a range of automation applications. The IQ-F is designed for fast manufacturing processes, providing high processing speeds. The Mitsubishi software is praised for its efficiency and ease of use allowing for a smoother programming process. The pros and cons are shown in the Table 6 [53] [36].

Table 6- pros and cons of Mitsubishi iQ-F [53] [36]

Mitsubishi iQ-F	
Pros	**Cons**
Built in Ethernet	Older technology
Built in SD card	Higher voltage
Large No. I/O	

The project required an affordable controller to demonstrate a prototyped version of the proposed control system. From the comparison table the Siemens S7-1200 is the most affordable controller. This PLC is also user friendly for programmers with less experience, making it more suited for creating a prototype. Although the other controllers offered features that would benefit the project, the higher price was out of the project budget. The engineer's familiarity with the S7-1200 is advantageous to keeping the project on track. Learning new technologies and software could delay the project's progress.

For these reasons, the Siemens S7-1200 was selected as the controller for the proposed project. The university has siemens S7-1200 PLCs available, keeping costs down. The PLC technical specifications can be found in table 7 [55].

Table 7 - PLC technical data [55]

Technical data	
Model	1214 C DC/DC/DC
Supply voltage	24V DC
Digital inputs	14
Digital Outputs	10
Analog inputs	2
Analog outputs	0

3.4 Component selection

3.4.1 Temperature sensor

The oven supplier offers replacement parts for their ovens. One of the parts offered is their recommended thermocouple as shown in Figure 19 [56].

Figure 19 - Replacement thermocouple [56]

The thermocouples offered are types: J and K [56]. The type of thermocouple refers to the temperature range which is determined by the two metals the sensor is constructed with. In a bimetallic sensor, the metals react differently to temperature change and generate a voltage output through their junction [57, p. 1070]. The voltage is induced by a change in EMF induced at the junction [58]. Type J uses iron and copper-nickel, recommended to be used for a maximum of 800°C [59]. Extended periods over the max temperature will cause degrading of the sensor. Type K uses a nickel-chromium and nickel-aluminium alloy construction [59]. This allows for a maximum continuous temperature of 1100°C [59]. Type J would be suitable for the main chamber as the set point is only 370°C [11]. Type K would be required for the afterburner where the temperature reaches 800°C [11].

Another suitable sensor was a resistance temperature detector (RTD) [57, p. 1070]. An RTD is constructed using a thin coil of wire usually made of platinum [60]. The sensor produces a resistance correlating with a change in temperature [57, p. 1070] [58] [60]. Figure 20 shows the correlation between temperature and resistance for different materials [61].

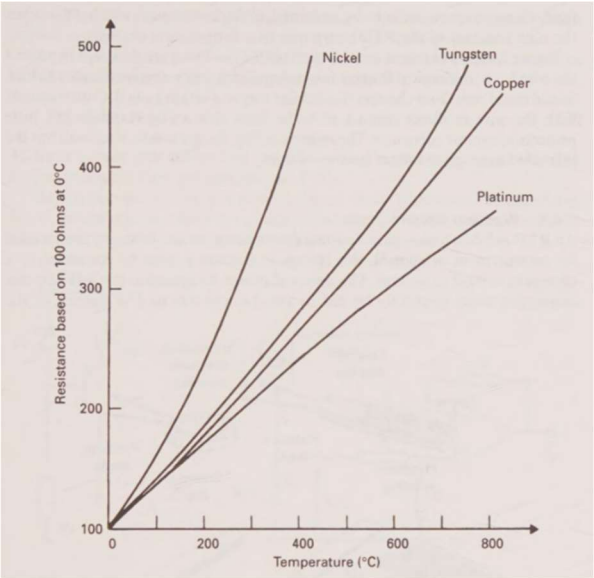

Figure 20 - Change of resistance with temperature for various materials [61]

Table 8 compares the temperature sensors [62] [63]. The sensors selected meet the requirements provided by the manufacturers recommended replacement thermocouple, the afterburner sensor must measure 14”, the main chamber sensor must be at least 12” [56]. These measurements ensure the sensor reaches the desired vicinity for measurement.

Table 8 - Comparison between Thermocouple and RTD [62] [63]

Sensor	Length	Diameter	Temperature	Cost	Picture
Type K thermocouple	300mm	6mm	1100°C	£85.45	
Class B RTD	4mm	2mm	850°C	£43.45	

The RTD sensors available for the required temperature range do not meet the length requirements for measuring the afterburner or main chamber [56] [63]. The thermocouple is more suitable for this project although less accurate [64]. Another advantage of the thermocouple is the sensing range and resolution [65]. Utilising a thermocouple rather than experimenting with another form of sensor allows the prototype to take advantage of existing infrastructure within the oven [56]. This would allow for retrofitting, utilising existing components.

From the thermocouple, cabling would be required to transfer data to the PLC. RS recommends the cabling shown in Figure 21, as it provides the best performance when used in conjunction with the selected thermocouple [66].

Figure 21 - Recommended thermocouple cable [66]

A type J thermocouple could be used for the main burner, as shown in Figure 22 [67].

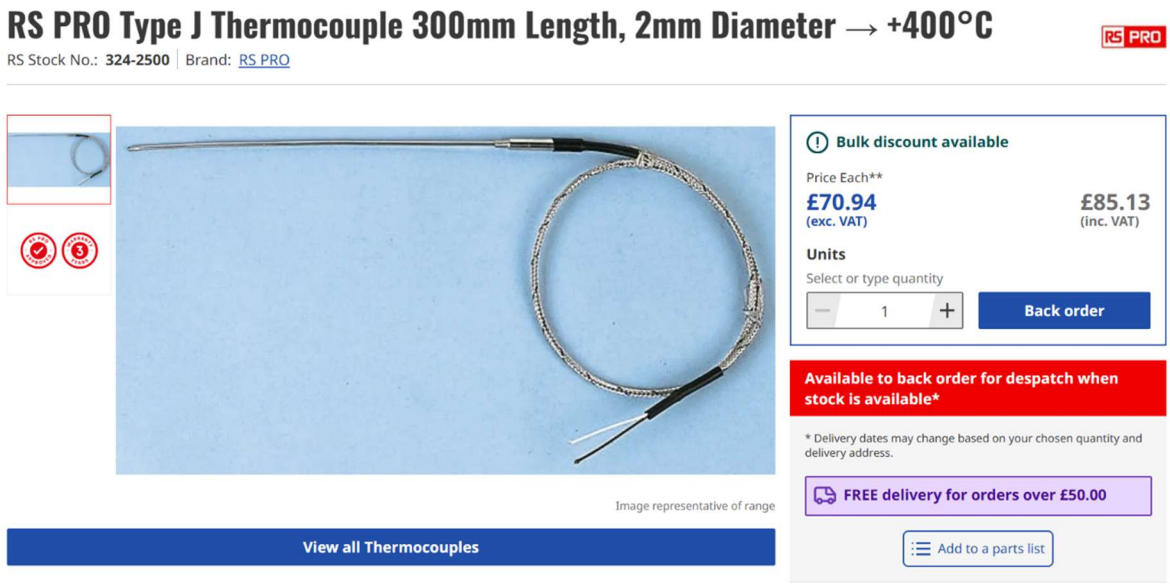

Figure 22 - Main burner thermocouple [67]

For the workpiece thermocouple, heavy duty cabling with glass insulation will be required to withstand the high temperatures of the oven. This probe can be placed inside the stator to monitor the temperature of the casing, preventing damage to the laminations and casting. Figure 23 shows the chosen thermocouple [68].

Figure 23 - Work piece thermocouple [68]

For the afterburner, which is set to a higher temperature, a type K thermocouple was required as shown in Figure 24 [62]. This thermocouple has the length required to reach the target area without modifying the current oven's set up [62].

Figure 24 - Afterburner thermocouple [62]

3.4.2 Relief panels

Relief panels are used to allow for pressure to be released in an emergency, preventing explosion [13]. The program must check the panels are in position before allowing the cycle to start [13]. Several types of sensors were compared in table 9 to determine the most suited option [69, pp. 964-972] [70, pp. 318-344].

Table 9 - Sensor comparison table [69] [70] [58]

Sensor	Advantages	Disadvantages
Mech limit switch	Reliable, Rugged, inexpensive	Moving parts, less precise, slower response time
Hall Effect sensor	Fast response, highly accurate, low power consumption	Expensive, Magnetic target required
Optical sensor	Fast response, high sensitivity	Unsuited for dirty environments, Expensive, require calibration
Magnetic sensor	Reliable, suited for dirty environement,	Requires magnetic target, expensive
Inductive sensor	Reliable, suited for dirty environement, Fast response	Metallic objects only, susceptible to interference

An efficient solution would be to install a mechanical limit switch [58]. If the relief panels are in place, they will close the lever of the switch, producing an output for the PLC. As no measurement is required from the sensor, there is no need for fast response or high accuracy [13]. Mechanical limit switches are an affordable option and would work well in the dusty environment where other sensors may fail [58]. There are several types of limit switches available for different applications, these are shown in Figure 25 [71]. For the application required, a plunger switch would be sufficient in detected the presence of the panel.

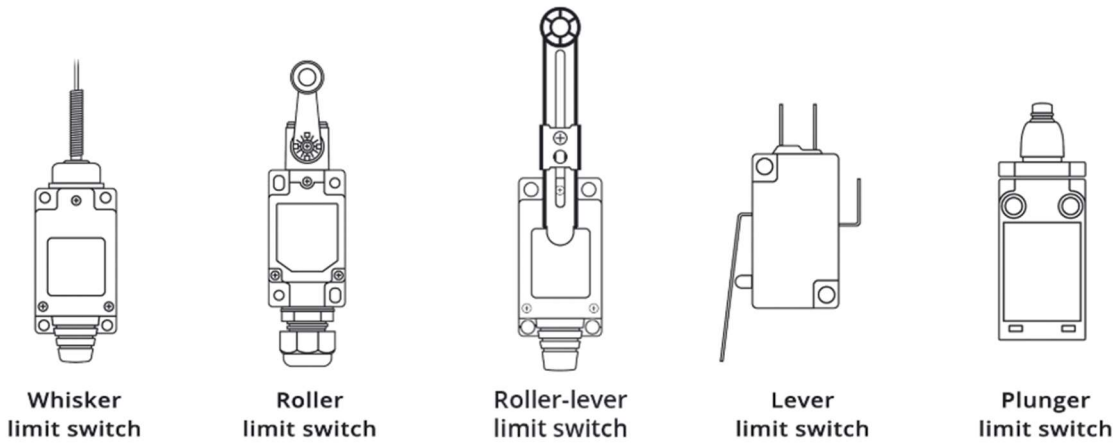

Figure 25 - Types of limit switch [71]

Limit switches offer several configurations, the main being normally open, normally closed and normally open/closed [71]. The mechanics of these switches are shown in Figure 26 [71]. For the application required in the project, detecting the pressence of the relief panel, a normally open switch would suffice. When the panel is present, it will depress the switch closing the contact. If the panel is not present the contact will remain open. Once included into the PLC program, the open switch will stop the program running.

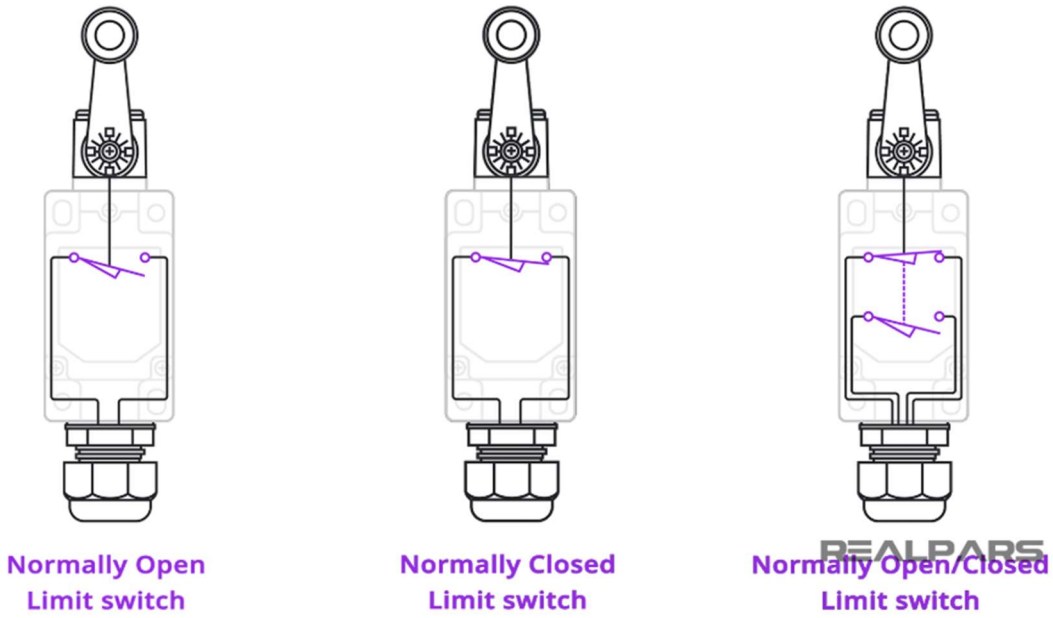

Figure 26 - Limit switches configurations [71]

Limit switches are manufactured with different pole and throw configurations [72]. These configurations are shown in Figure 27 and refer to how the switch operates [72]. As the required switch only needs to detect the presence of the relief panel, a single-pole single-throw (SPST) single-break would be required [72].

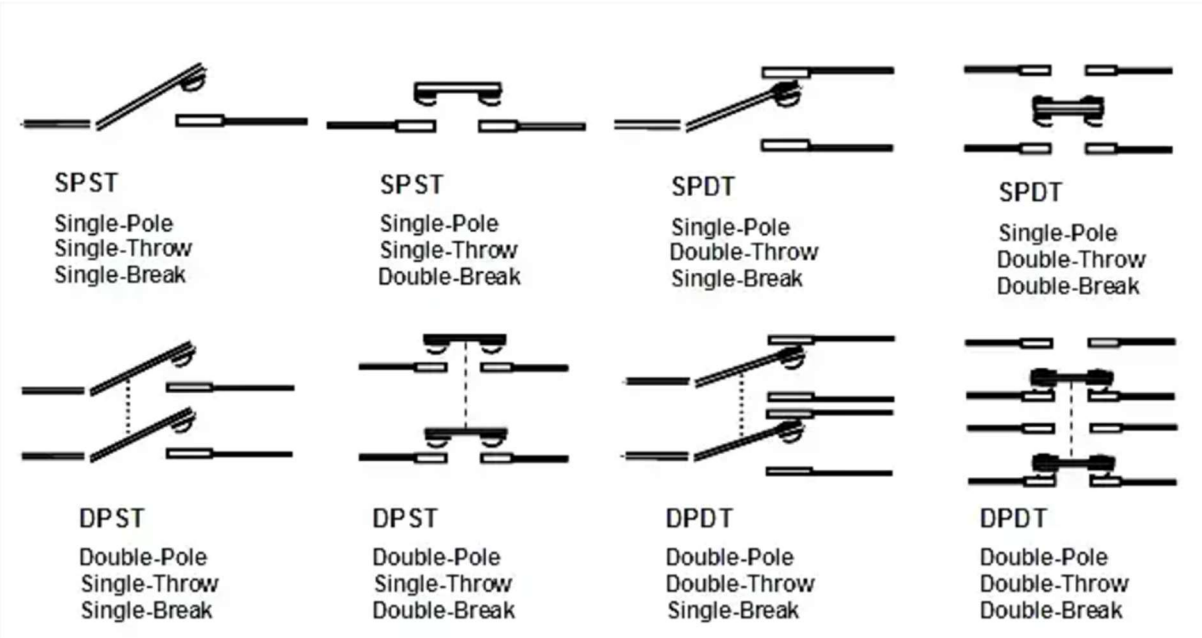

Figure 27 - Switch types [72]

Figure 28 illustrates how the limit switch can be used to detect the relief panel opening [71].

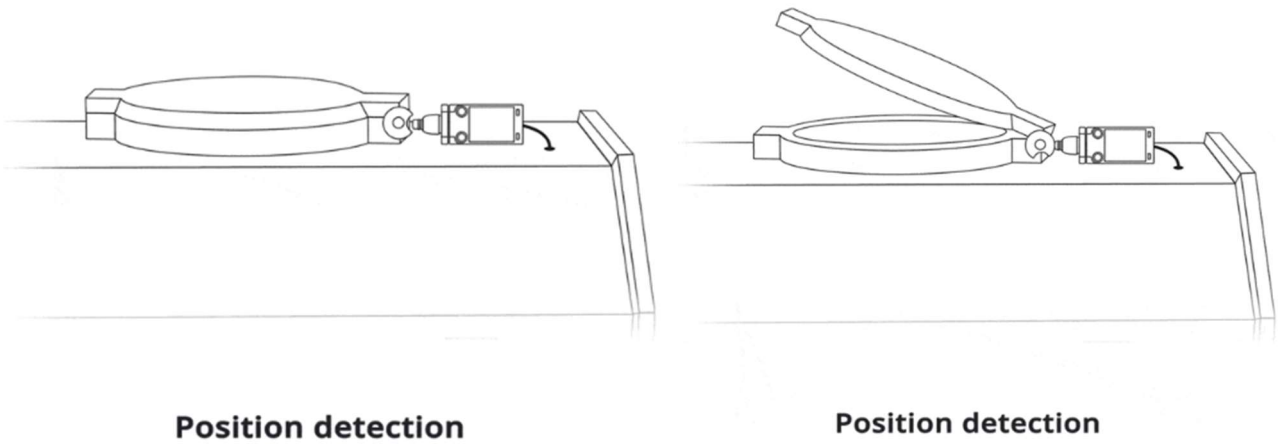

Figure 28 - Limit switch for relief panel example [71]

From the requirements, it was determined a NO SPST roller plunger limit switch would be an adequate solution. The switch in Figure 29 was selected as it met all specifications at an affordable price [73]. From the datasheet, the switch is functions at 24V DC which is the operating voltage of the PLC [74] [55].

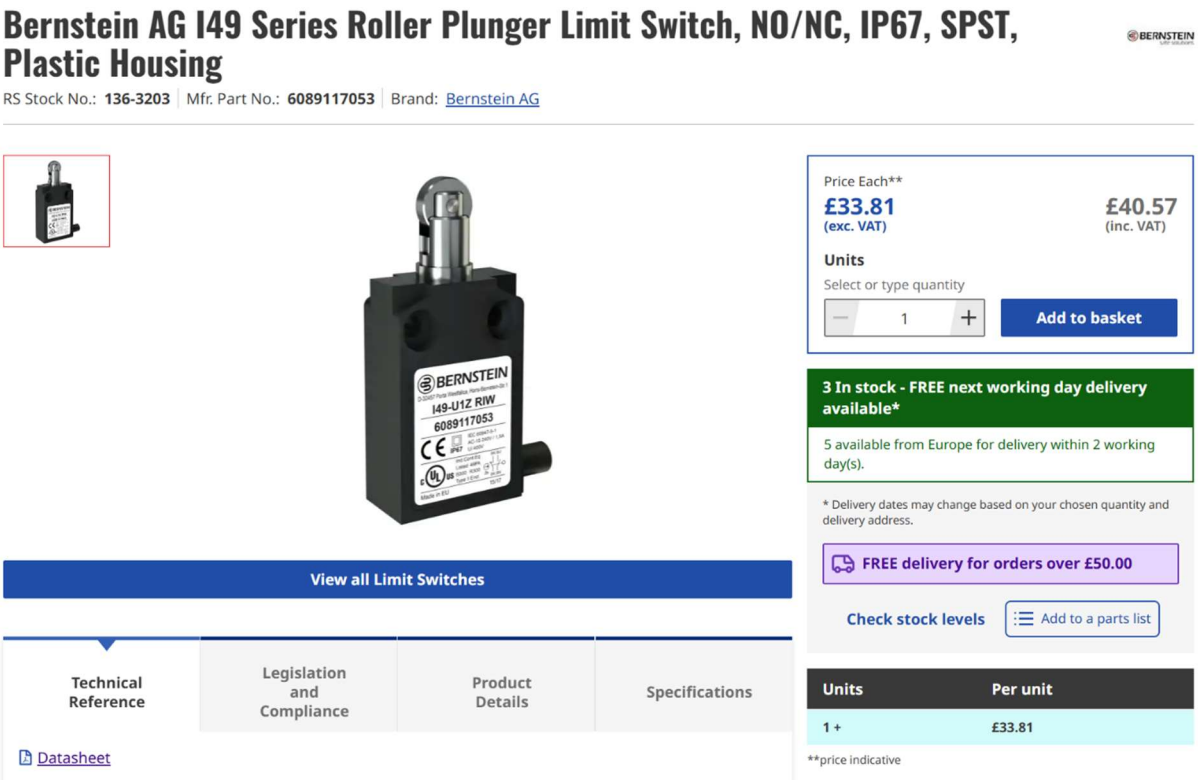

Figure 29 - Relief panel limit switch [73]

3.4.3 Door interlock

To prevent the cycle running with the door open, an interlock was required. Fitted to the locking mechanism of the door, a NO switch would only allow the program to continue when closed. A simple interlock switch was selected as an inexpensive solution shown in Figure 30 [75].

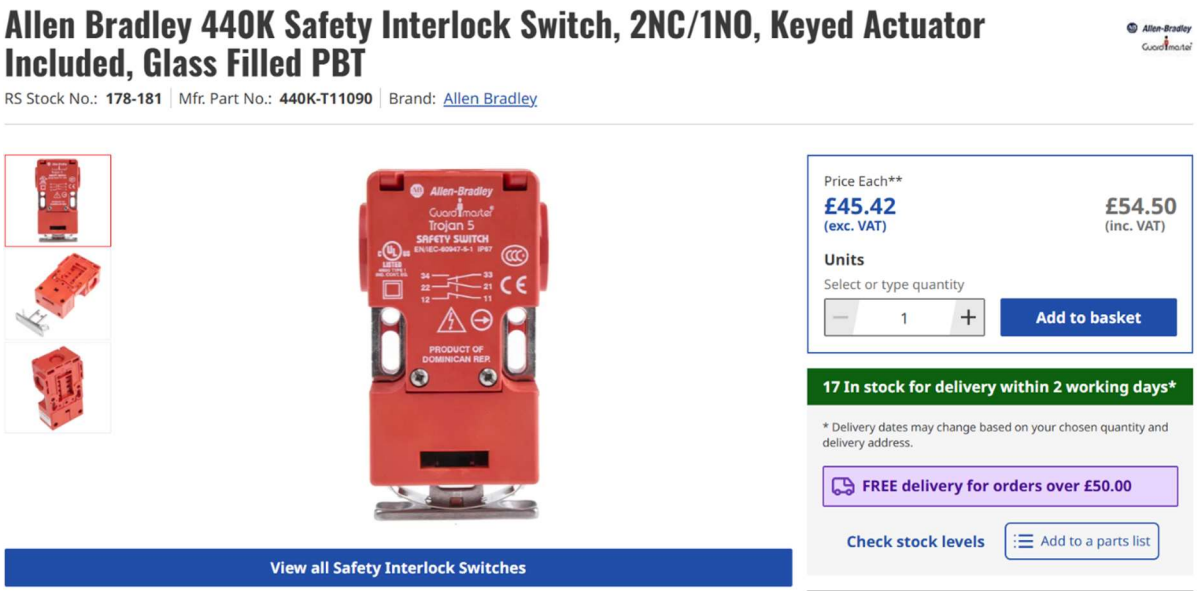

Figure 30 - Door interlock [75]

3.4.4 Water pressure sensor

There are three different types of pressure sensor. Absolute pressure sensors require a vacuum to measure pressure [76]. Differential pressure sensors measure the difference in pressure between two points, requiring two sensors [76]. Gauge pressure sensors measure pressure compared to atmospheric pressure [76]. To measure the pressure of the water supply, a gauge pressure sensor was required. Uk regulations state that water pressure must be a minimum of 0.7 bar [77]. The oven manufacturere states water pressure must range between 2.76 and 6.9 bar [78]. The sensor must also be compatible with the chosen PLC, capable of operating at 24V. Using these parameters, two sensors were compared [79] [80].

Table 10 - Water pressure sensor comparison [79] [80]

Sensor	Max reading	Accuracy	Output type	Min reading	Supply voltage	Media measured	Price	Picture
Gems Sensors 3100 Series	10 bar	0.25%	Analogue	0 Bar	8 - 30V DC	Air Fluid, Hydraulic Fluid, Hydraulic Oil, Oil	£175	
Wika A-10	10 bar	0.50%	Analogue	0 Bar	8 - 30V DC	Gas, liquid	£147.88	

From Table 10, the Gems sensor can measure more media types but offers lower accuracy [79]. For the project, water is the only media measured. For this reason, and the more attractive price point, the Wika sensor was selected [80].

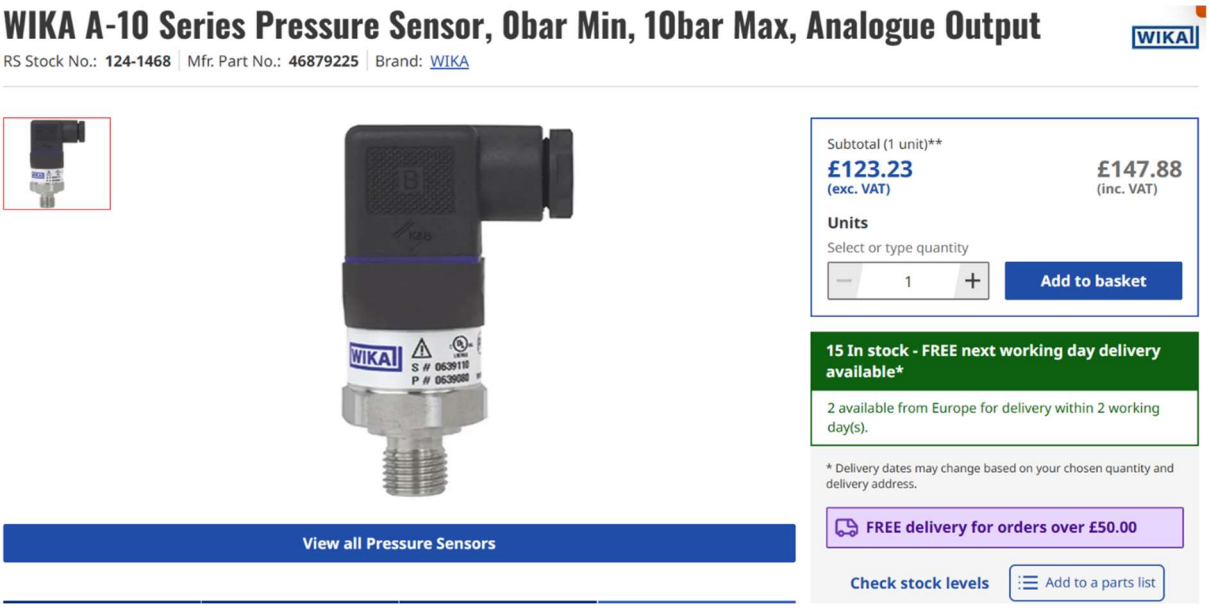

Figure 31 – Selected water pressure sensor [80]

3.4.5 Gas pressure sensor

From the oven manufacturer, required gas pressure is 0.0149 - 0.027 bar [78] [81]. A similar sensor as the water pressure can be utilised to measure the gas. Selecting a sensor from the same manufacturing series simplifies the design of the project allowing for efficient progression and prototyping. A sensor was selected capable of measuring up to 1 bar satisfying the manufacturers requirements [82].

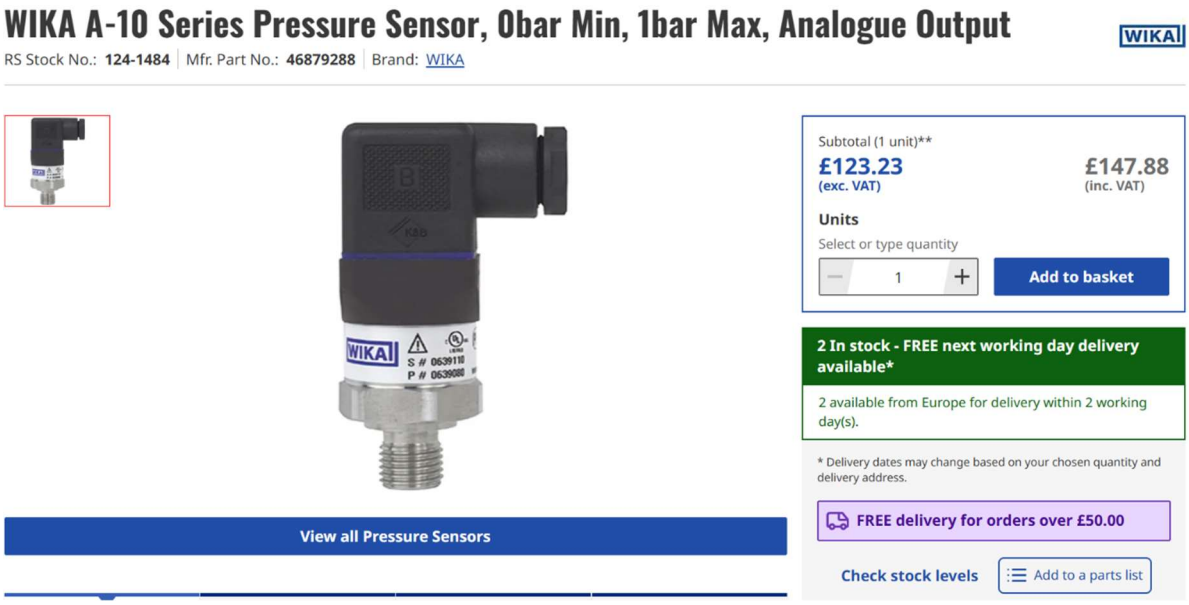

Figure 32 – Selected gas pressure sensor [82]

3.4.6 Flow meter

The oven uses water jets to maintain the required environment for pyrolysis [13] [14]. If the oven gets too hot, the jets are used to slow the process allowing the afterburner enough time to eliminate the waste material [13] [14]. The program must check water flow to the jets, for this a flow meter was required [13]. There are several different types of flow meter available, used for different applications.

Differential pressure flow meters require two measuring elements separated by a set range. The flow is obstructed between the sensors, the difference in pressure is used to calculate the flow rate [83] [84] [85].

Turbine flowmeters use a turbine within the pipe. The revolutions per minute of the turbine is used to calculate the flow of the liquid [85] [83].

Ultrasonic flow meters utilise two ultrasonic transducers [83] [84] [85] [86]. The flow rate is measured based on the change in time it takes the receiver to detect the ultrasonic signal [83] [84] [85] [86]. A base line is recorded at no flow, allowing flow rate to be calculated proportionally to the signal delay [83] [84] [85] [86]. This is a non-intrusive measurement method, meaning no components are required inside the pipe [83] [84] [85] [86].

Magnetic flow meters are also non-intrusive, relying on the conductivity of the fluid in the pipe [83] [84] [85] [86] [69, pp. 208-224]. They utilise faraday's law of electromagnetic induction to calculate the rate of flow [83] [84] [85] [86] [69, pp. 208-224]. Inducing a magnetic field around the pipe, the fluid acts as a moving conductor [83] [84] [85] [86] [69, pp. 208-224]. Voltage is produced by the conductors flow which is proportionate to the velocity of the fluid [83] [84] [85] [86] [69, pp. 208-224].

To keep costs down, the water pressure sensor can be utilized as a flow detector. As the purpose of the flow meter is only to confirm the presence of water in the pipe, speed of flow is not required. For this reason, the water pressure sensor can be used to check flow of water.

3.4.7 Further components

The upgraded control system would be able to utilise the existing ignition system using a standard digital output from the PLC to spark the electrode [56]. The PLC would control the blower motors using the contactors already in place [56]. The PLC would be able to control the solenoid valves already in place to control the water and gas [56].

3.4.8 Expansion module requirements

The PLC required a power module to convert the 230V AC input available in the workplace [87]. The PM1207 converts 230V AC into the required 24V DC [87] [88]. It is the recommended unit for the chosen PLC, shown in Figure 33 [89].

Figure 33 - Siemens PM1207 power supply module [89]

The thermocouples require a cold junction compensation module to prevent interference in the readings [90]. The SM1231 TC model, Figure 34, is the recommended module for use with the chosen PLC [87] [91].

Figure 34 - Thermocouple cold junction compensation module [91]

3.4.9 HMI screen

Table 11 compares several HMI options [92] [93] [94] [95] [96] [97]. Schneider offers the best interfacing option and the most on-board memory, but screen size is limited [97]. Allen Bradley offers the biggest display and large memory but is more expensive [95]. Siemens offers a midsize display, reasonably priced [93]. Although Siemens has the lowest on-board memory, it is the most compatible with the chosen PLC and so was selected for the project. The university has a stock of Siemens HMI screens, so it does not affect the project budget.

Table 11 - HMI screen comparison [92] [93] [94] [95] [96] [97].

Model	KTP700 Basic 7 in	2711P Series	GTO series harmony
Manufacturer	Siemens	Allen Bradley	Schneider
Port type	Ethernet	Ethernet	2 x COM2, 2 x Ethernet (RJ45), 2 x USB 2.0, COM1
Display size	7"	12.1"	4.7"
Interface	PROFINET	Ethernet/IP	RS232, RS485, Ethernet, USB
Supply voltage	24V	24V	24V
On board memory	10MB	80MB	96MB
Display type	TFT	LCD	TFT
Cost	£944.40	£3,997.40	£1,421.11
Picture			

3.5 – Project costs

The proposed real upgrade cost of the control system was totalled in Table 12 [88] [66] [62] [68] [67] [73] [75] [50] [91] [82] [80] [92] .

Table 12 - Real life project costs [88] [66] [62] [68] [67] [73] [75] [50] [91] [82]

Product	Price	Picture
SIMATIC S7-1200 Power Module PM1207	£102	
Thermocouple cable	£57.26	
Thermocouple K	£85.45	
Thermocouple J	£20.44	
Thermocouple J	£85.13	
Limit switch	£40.57	
Interlock	£54.50	
Siemens S7 1214C PLC	£512.40	
Siemens SM 1231 TC	£613.20	
Gas pressure sensor x 2	£296	
Water pressure sensor	£147.88	
Simatic touch HMI	£944.40	
Total	**£2,959**	

3.6 Prototype components

To showcase the function of the designed program, a prototype was built. Keeping within the project budget, low-cost components were selected to provide a method of testing and demonstrating.

3.6.1 Thermocouple replacement

To showcase changes in temperatures over hundreds of degrees would be extremely difficult in a prototyping environment. To keep the budget low and the prototype controllable, potentiometers were chosen as a substitute for the thermocouples. 10kΩ potentiometers were selected as recommended for use with the chosen PLC [87].

3.6.2 Pressure sensor replacement

It would be nonsensical to accurately depict changes in pressure whilst demonstrating the project. 10kΩ potentiometers were again selected as a substitute, for their low cost and ease of interactivity for prototyping.

3.6.3 Cold junction compensation module replacement

Without the need of thermocouples, the cold junction compensation module was no longer required for the project. As the chosen replacement was potentiometers, an analogue input module was required. A compatible module was selected as shown in Figure 35, recommended by the manufacturer [87] [98].

Figure 35 Analogue input module [98]

3.6.4 Program output indicators

To represent the gas and water valves, blower motors and ignition system, the prototype will utilise indicator bulbs, shown in Figure 36 [99]. These are a cost-effective representation of the outputs.

Figure 36 - Indicator lights for program outputs [99]

3.6.5 Cycle control

For the start, stop and Emergency stop, panel mount buttons were incorporated, shown in Figure 37 [100] [101].

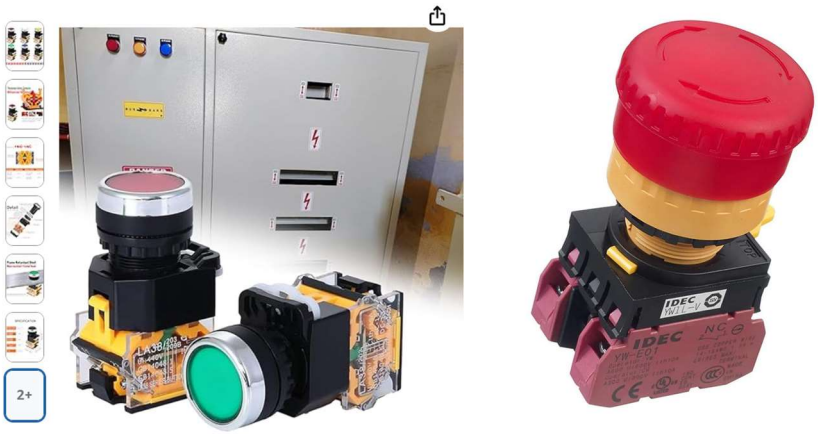

Figure 37 - Panel mount buttons for prototype [100] [101]

3.6.6 Interlock and pressure relief panel replacement

To test the function of the door interlock and the pressure relief panel in the prototype build, rocker switches were substituted to toggle the outputs and test the system.

3.6.7 Total prototype cost

Table 13 shows the total prototype costs [102] [103] [104] [99] [100] [105] [101] [106]. The PLC, HMI and all passive components were supplied by the university. This total cost was within the budget of £250.

Table 13 - Total prototype costs [102] [103] [104] [99] [100] [105] [101] [106]

Product	Price	Picture
Enclosure	£13.36	
Rocker switches	£4.99	
10K potentiometers	£9.99	
LED indicator lamps	£9.36	
Push button switch x 2	£6.29	
Din rail	£5.29	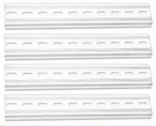
E-stop	£17.75	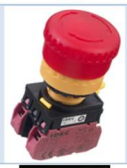
SM 1231 Analog input	£153.42	
S7 1231C PLC	£0.00	
Simatic touch HMI	£0.00	
Passive components	£0.00	
Total	£220.45	

3.7 software selection

In accordance with the manufacturer's recommendations for the chosen PLC, Siemens TIA was chosen to design the ladder program [87]. The HMI, engineers and warning screens were designed and programmed in TIA. The engineer's familiarity with the software aided in its selection as it allowed for smoother programming.

3.8 Simulation method

Factory I/O is a simulation software by Real Game, utilised for PLC training [107]. It allows users to build an automation set up controlled by a PLC. Linked with Siemens TIA, it can be utilised to test programs, making troubleshooting and fault finding more achievable. Factory I/O allowed for each stage of the program to be tested as it was written. This helped avoid having to fault find large lengths of code. This served as an effective tester before committing to the components required for the real prototype. The only disadvantage of using Factory I/O is that it is limited to the automation components it offers. To simulate the ovens functions substitutions had to be made to represent parts of the oven.

To demonstrate the gas and water, conveyors were used in the simulation as a visual aid. To demonstrate the ignition and fans, stack lights were substituted. For the interlock and pressure relief panel, safety doors were utilised. For thermocouples and pressure gauges, potentiometers were used.

3.9 Testing and evaluation methods

To test the prototype, all possible scenarios of operation were run to ensure the design functioned as required. This involved altering the pressure and temperature readings to ensure the program reacted as designed. This also involved toggling the rocker switches to test the programmed safety features. The produced outputs were observed using the HMI screen and the indicator lamps. The prototype was evaluated based on how well it reacted to the testing and if it conducted the required functions.

Chapter 4 – System design

4.1 Design requirements

Table 14 - Design requirements [11] [78] [81].

System parameters	Set point	Minimum	Maximum
Afterburner temperature	800°C	850°C	750°C
Main burner **temperature**	370°C	320°C	420°C
Workpiece temperature	400°C	N/A	450°C
Afterburner gas pressure	N/A	0.0149 bar	0.027 bar
Main burner **gas pressure**	N/A	0.0149 bar	0.027 bar
Water pressure	N/A	2.76 bar	6.9 bar
Cycle time	18 Hrs	N/A	N/A

From industrial standards and manufacturers recommendations, Table 14 lists the system parameters the proposed system must produce [11] [78] [81]. The system had to be designed and built within the set time scale as shown in the Gantt chart in Appendix 1. The system prototype had to be built within the set budget of £250. These requirements were taken into consideration when designing the project solution.

From the requirements, the inputs and outputs were constructed as shown in Table 15 and Table 16.

Table 15 - Prototype inputs

Inputs	Input type
On	Digital
Off	Digital
E-stop	Digital
Afterburner thermocouple	Analogue
Main burner thermocouple	Analogue
Work piece thermocouple	Analogue
Door interlock	Digital
Pressure relief panel	Digital
Water pressure sensor	Analogue
Afterburner Gas pressure sensor	Analogue
Main burner Gas pressure sensor	Analogue

Table 16 - Prototype outputs

Outputs	Output type
Cycle running indicator	Digital
Afterburner Gas	Digital
Afterburner Ignition	Digital
Afterburner Blower	Digital
Main burner Gas	Digital
Main burner Ignition	Digital
Main burner blower	Digital
Water Valve	Digital

4.2 Wiring diagram

Having specified the inputs and selected the required components, a wiring diagram was constructed for both the proposed implemented system and the prototype. The wiring diagram for the proposed implemented system is shown in Figure 38. The components were wired based on the specifications given in the system manual for the PLC and analogue input module [87]. All red lines were connected to the common 24V DC supply, black lines were connected to the negative of the supply [87]. All common and earth terminals of the system were connected to this negative as specified in the manual [87].

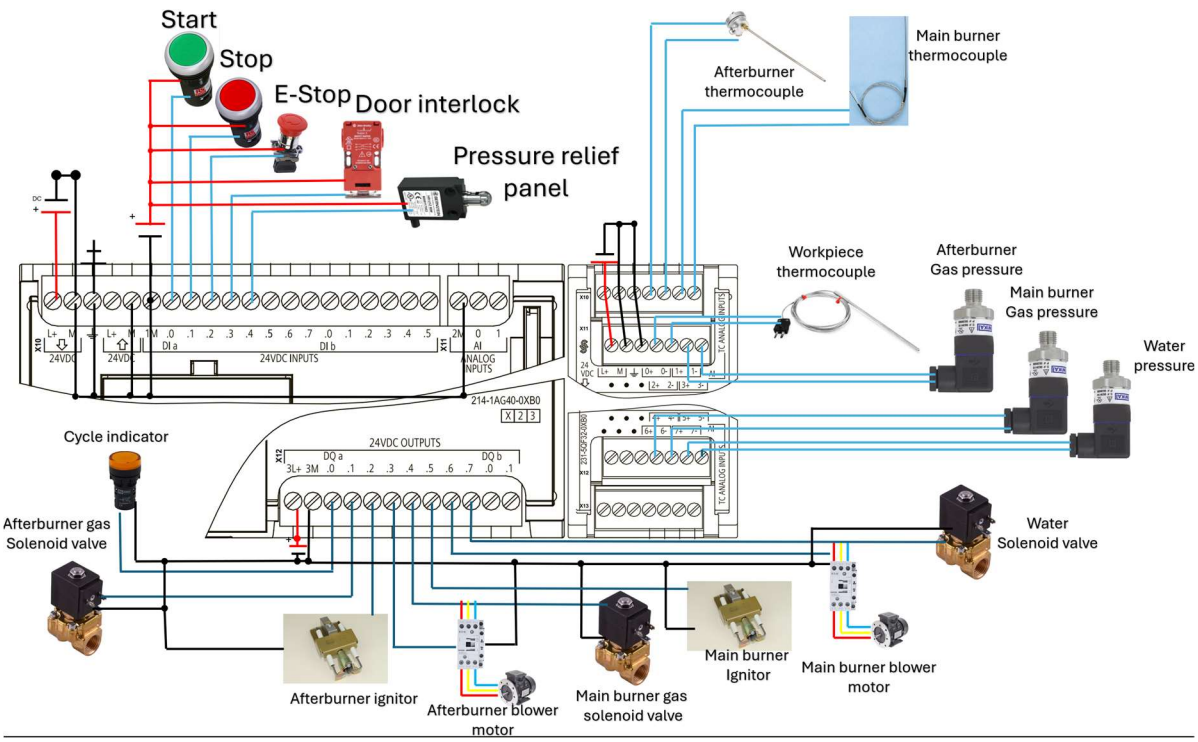

Figure 38 - Implemented wiring diagram [87]

Figure 39 shows the wiring diagram for the actual prototype build. Components were wired based on the recommendations from the system manual [87]. Sourcing outputs like the start,stop, E-stop and switches are wired from the power supply, with the PLC providing the negative terminal [87]. The potentiometers are wired to the four terminals of the analogue input module, as specidied in the manual [87]. The remaining two are connected to the anaolgue inputs of the PLC [87]. The indicator lamps are connected to the eight digital outputs of the PLC [87]. Each battery symbol in the diagram represents a connection to the common DC power supply providing 24V [87].

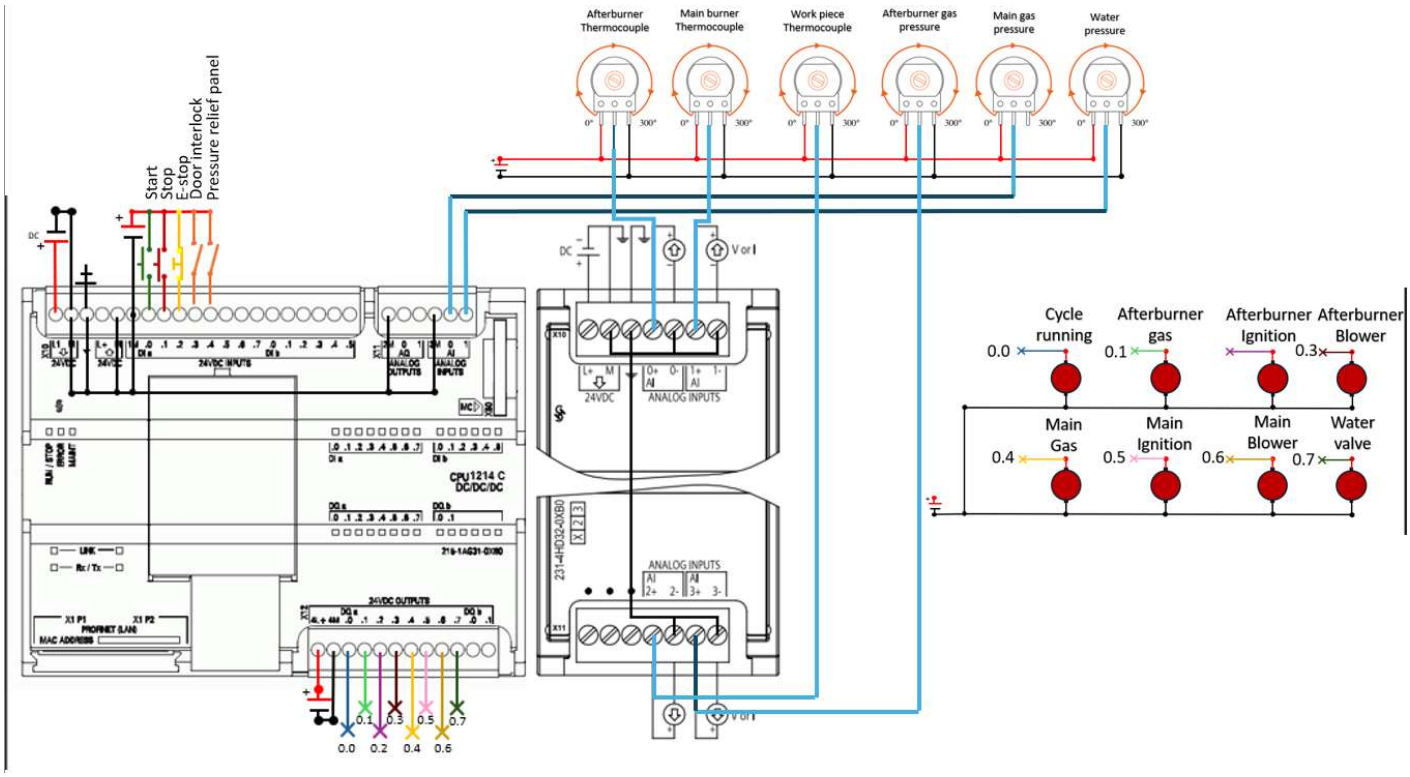

Figure 39 - Designed showcase prototype wiring diagram [87]

4.3 Design considerations

Before building the prototype, the program was designed using siemens TIA portal. Before development of the program the control method for the oven's temperature was decided.

4.3.1 Control choice

As discussed in section 2.6, there are many methods of temperature control. For the prototype it was decided that on/off control would be the most suited method. This type of control would be simple to implement and would produce a functioning prototype for the engineer to present the idea of an upgraded system. PID control may produce more accurate results but would require real life testing to tune the controller. As this design is just to be a proof of concept, On/Off control served as a suitable control method.

4.3.2 Warnings and alarms

Before designing the program, the required warnings and alarms were considered, shown in Table 17 and Table 18. These warnings are displayed on the HMI screen to alert the engineer of a problem with the system. The presence of a warning does not stop the cycle, as they are not detrimental to safety and function.

Table 17 - System warnings

Warnings	Description
Afterburner over temp	Afterburner thermocouple over upper limit
Afterburner under temp	Afterburner thermocouple below lower limit
Main burner over temp	Main burner thermocouple over upper limit
Main gas pressure high	Main gas pressure over upper limit
Main gas pressure low	Main gas pressure under lower limit
Afterburner gas pressure high	Afterburner gas pressure over upper limit
Afterburner gas pressure low	Afterburner gas pressure Under lower limit
Water pressure high	Water pressure over upper limit

Table 18 - System alarms

Alarms	Description
No water	Zero water pressure meaning no water flow
Work piece over temperature	Work piece thermocouple over upper limit
Door open	Door interlock not engaged (off)
Relief panel open	Pressure relief panel not engaged (off)
Water pressure low	Water pressure below lower limit
Afterburner malfunction	Afterburner temp not increased after 30s Either no gas or no ignition.
Main burner malfunction	Main burner temp not increased after 30s Either no gas or no ignition.

An alarm in the system was decided to be detrimental to the system and so when triggered the cycle stops. If the no water alarm is triggered it means the pressure sensor has a reading of zero resulting in no flow of water. As the water jet is crucial for temperature management, this leaves to cycle termination [13]. The cycle is terminated if the water pressure is below the manufacturers recommend pressure. The integrity of the workpiece is the most crucial factor of the project and so if the workpiece thermocouple is over the set temperature the cycle stops. If the door is open, it poses a threat to the safety of the workshop and the effectiveness of the oven, so the cycle is terminated. The pressure relief panel is an important safety feature [13] [15]. In an emergency, if the pressure inside the chamber reaches a dangerous level, the relief panel is blown open to release pressure [14]. If the relief panel is open the cycle must stop. The afterburner and main burner malfunction alarms are safety features that check the burners are functioning correctly. If the burner temperature readings do not rise it is a sign that either ignition has failed, or gas is not present in the system. Both scenarios must terminate the cycle.

4.4 Program Flowchart

Before beginning the program design, the fundamental functions of the program were implemented into a flowchart to illustrate the program principles, shown in Figure 40. The program will not start unless all parameters are set. Once set the cycle timer will begin launching the afterburner ignition cycle. The main burner will only ignite once the afterburner has reached the set point. If the afterburner or main burner do not reach set point after a set time, malfunction is triggered signalling an ignition or gas error. If the main burner or work piece is over temperature, main gas is turned off and water is turned on to manage the temperature. Once the main chamber is under the set temp the reignition cycle is triggered. If the workpiece is significantly over temperature, the cycle stops.

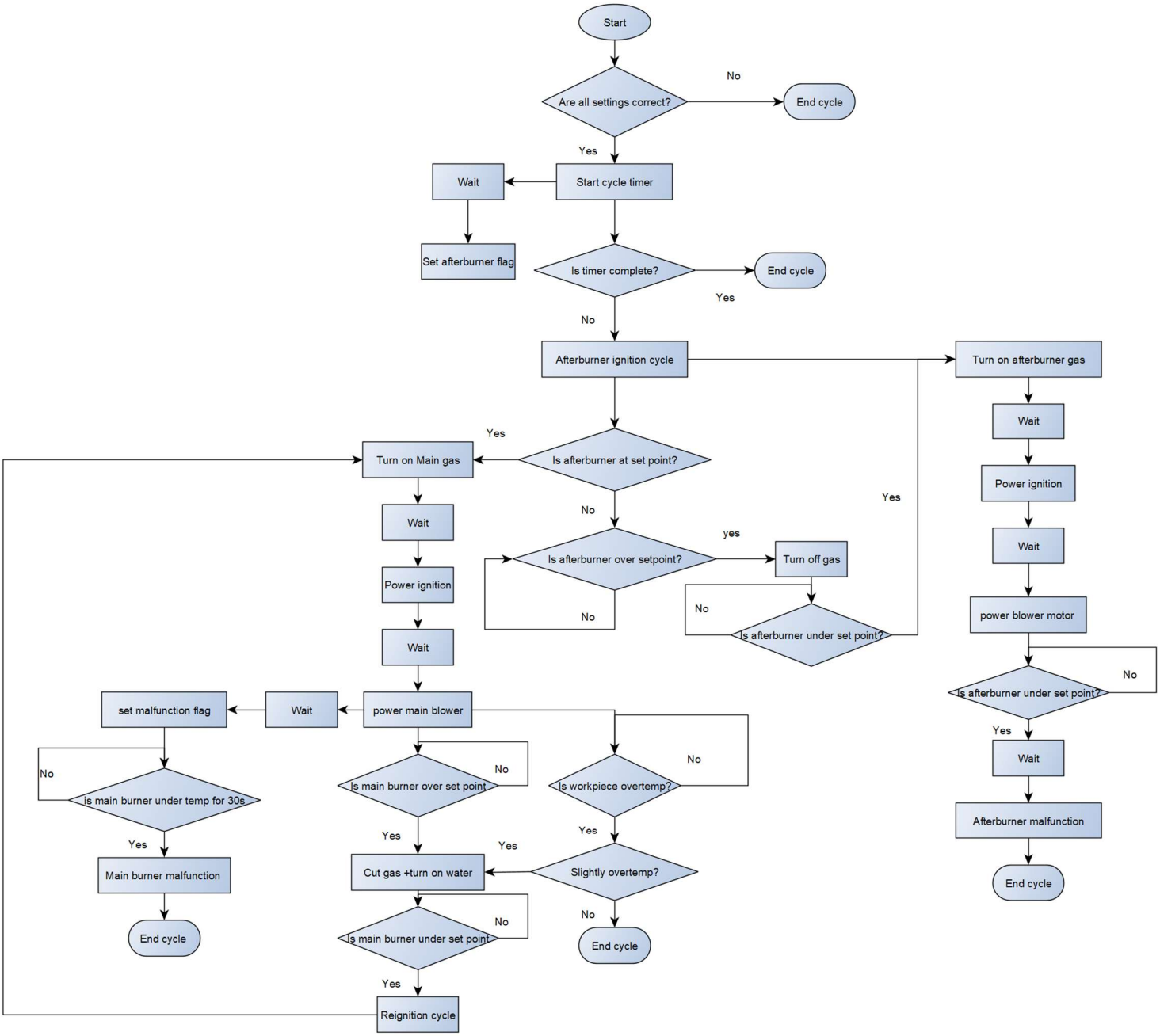

Figure 40 - Program flowchart

4.5 Program fundamentals

The program utilized multiple functions to control the system. Built in functions like timers, math, comparators, and conversion blocks were utilised, as explained in the TIA user manual [108]. More complex function blocks were created to carry out different functions, these are explained in the following sections. The full ladder program is shown in Appendix 2, this section details the more important functions of the program.

4.5.1 Analogue input conversion

The analogue input module was configured in Siemens TIA as shown in Figure 41. Once configured, inputs were set to a 0-10V range as shown in Figure 42.

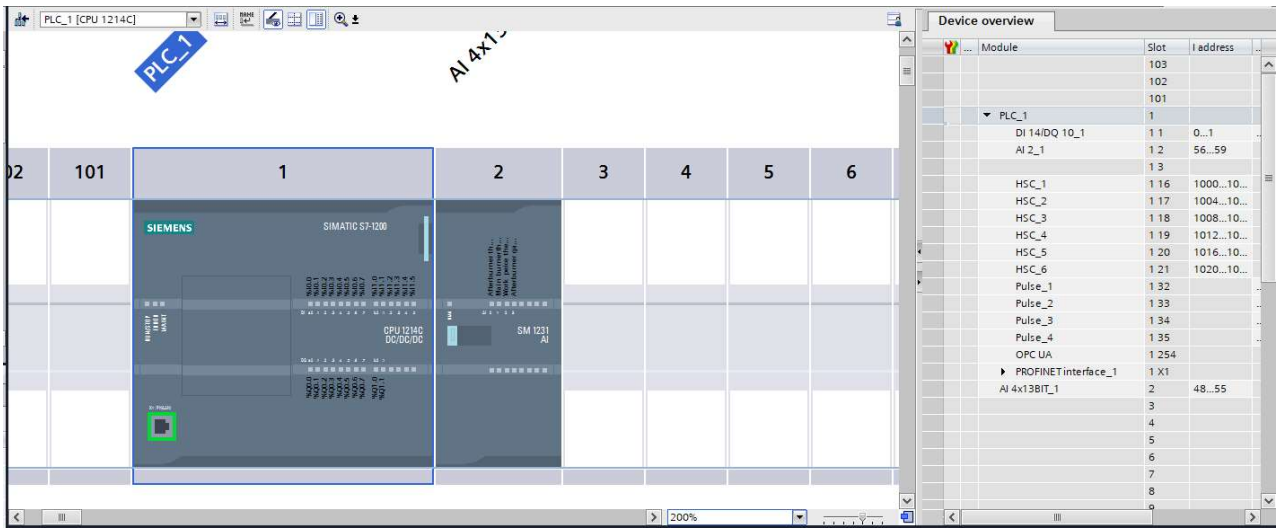

Figure 41 - Analogue input module configuration

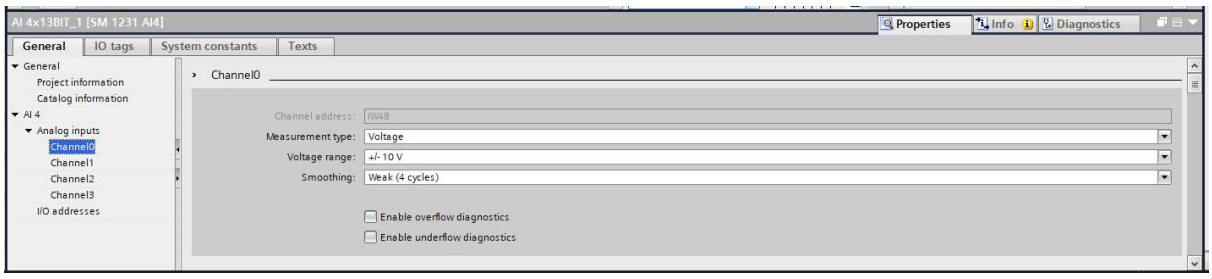

Figure 42 - Analogue inputs configured

To convert the analogue inputs, a function block was created. From the manual [87], analogue inputs are represented within the PLC as values from 0 to 27648. The readings from the potentiometer are given from of 0V to 10V and so must be converted to be compatible with the PLC [87]. This is done using a two-step process, the first is a normalising function. This converts the input from an integer value 0-27648, to a real value. An integer refers to a signed number from -32768 to +32768, a real represents a number as a decimal fraction [31]. The real output from the normalise function is given as a percentage; the second step is to scale the percentage using the scaling function. This sets the limits of the output, for the thermocouples the range was set from 0-1000°C as this is the measurement range. For the gas pressure, the range was set from 0-1 bar as this is range of the pressure sensor. For the water pressure the range was set from 0-10 bar, the water pressure range. These functions are shown in Figure 43, Figure 44, and Figure 45.

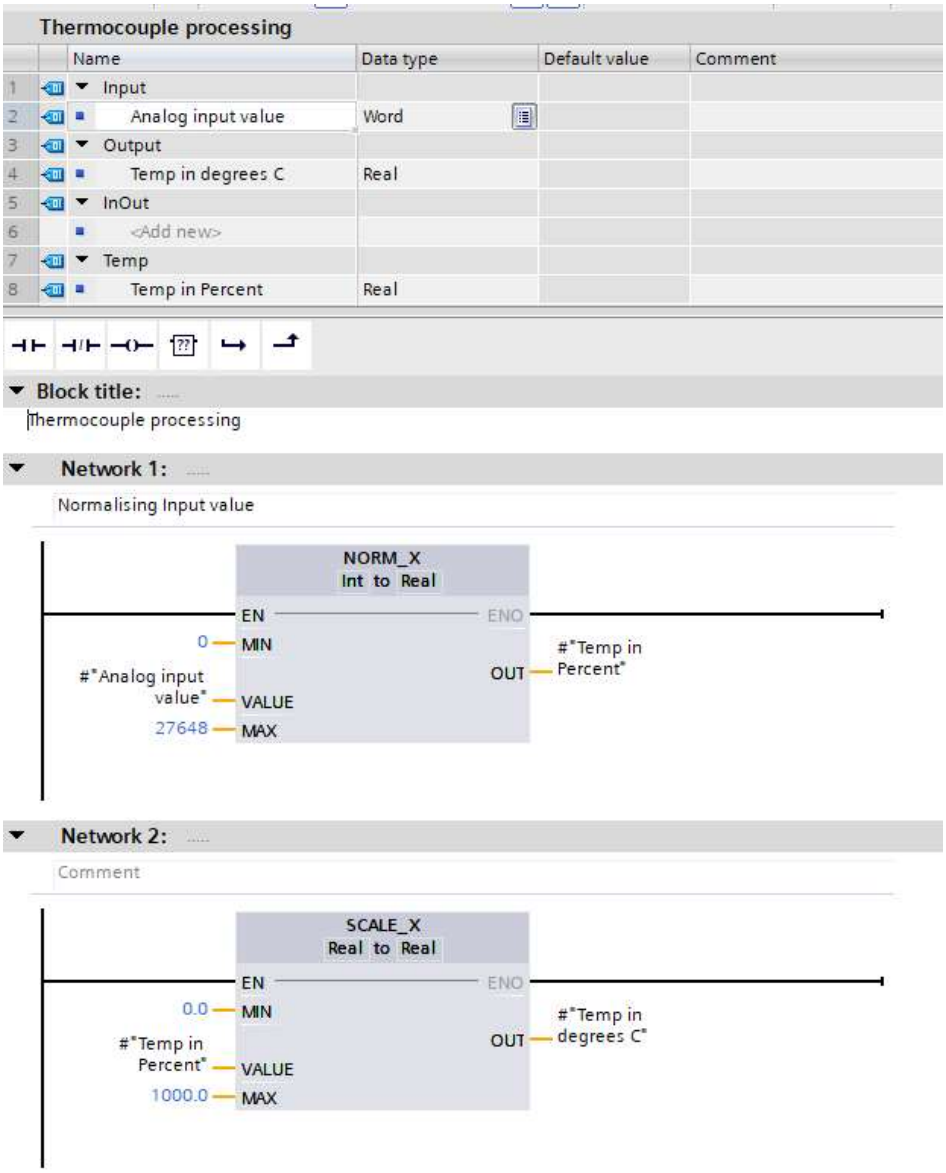

Figure 43 - Thermocouple analogue input set up

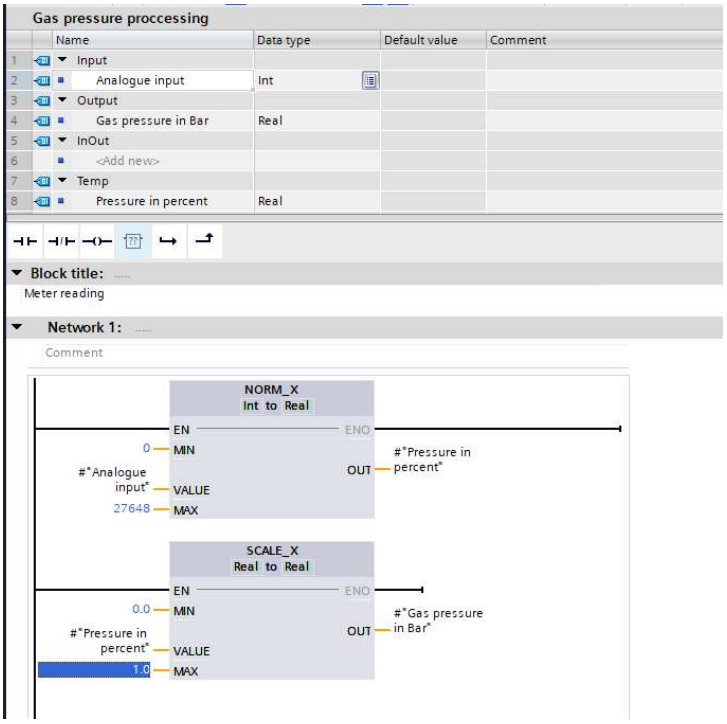

Figure 44 - Gas pressure analogue input set up

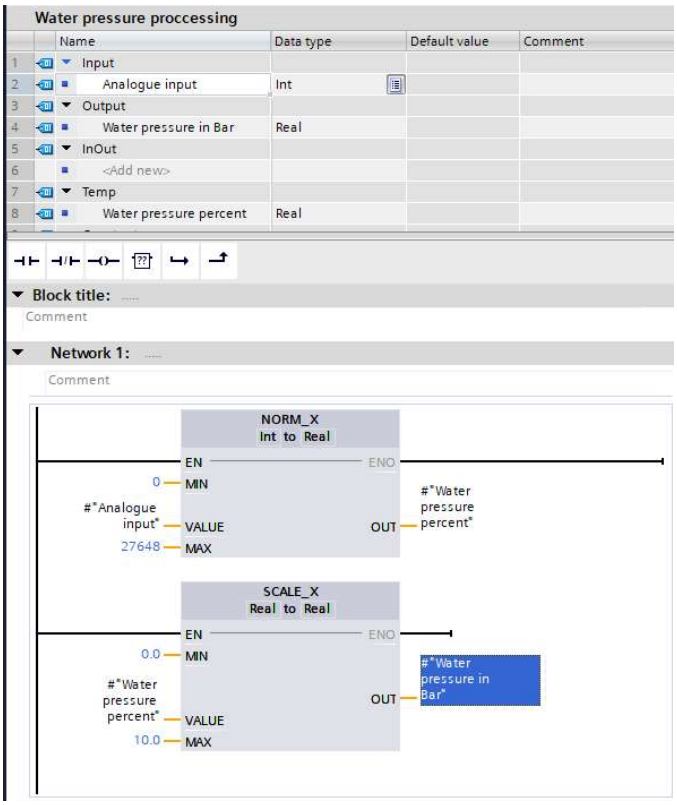

Figure 45 - Water pressure analogue input set up

This function block is shown in Figure 46, where the thermocouple inputs are converted to temperature readings. The analogue input processing for the gas and water pressures are shown in Figure 47.

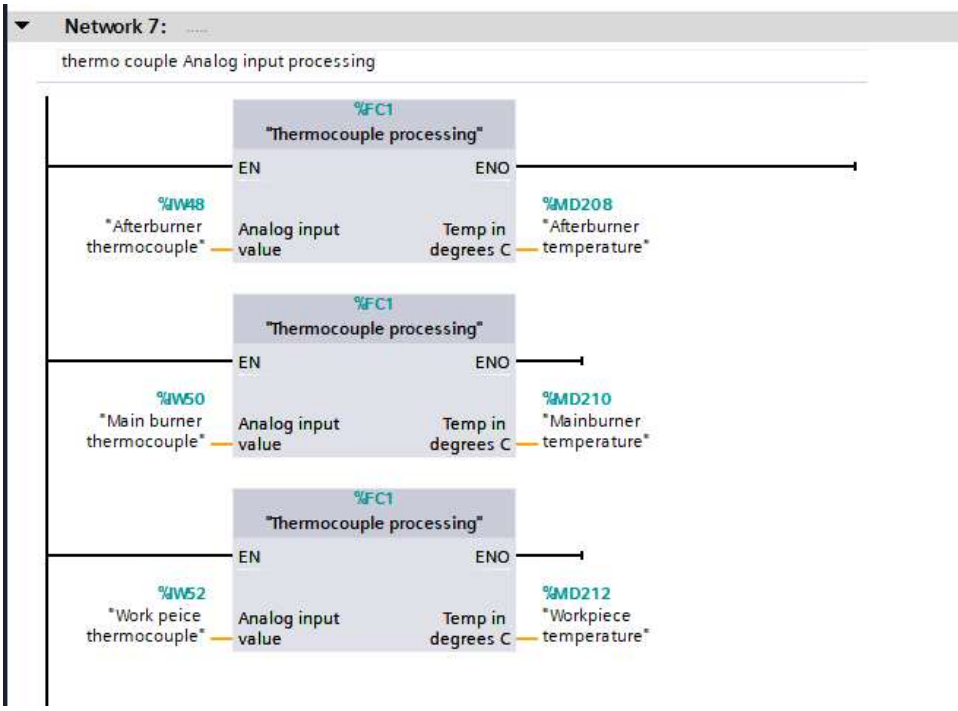

Figure 46 - Thermocouple analogue input processing

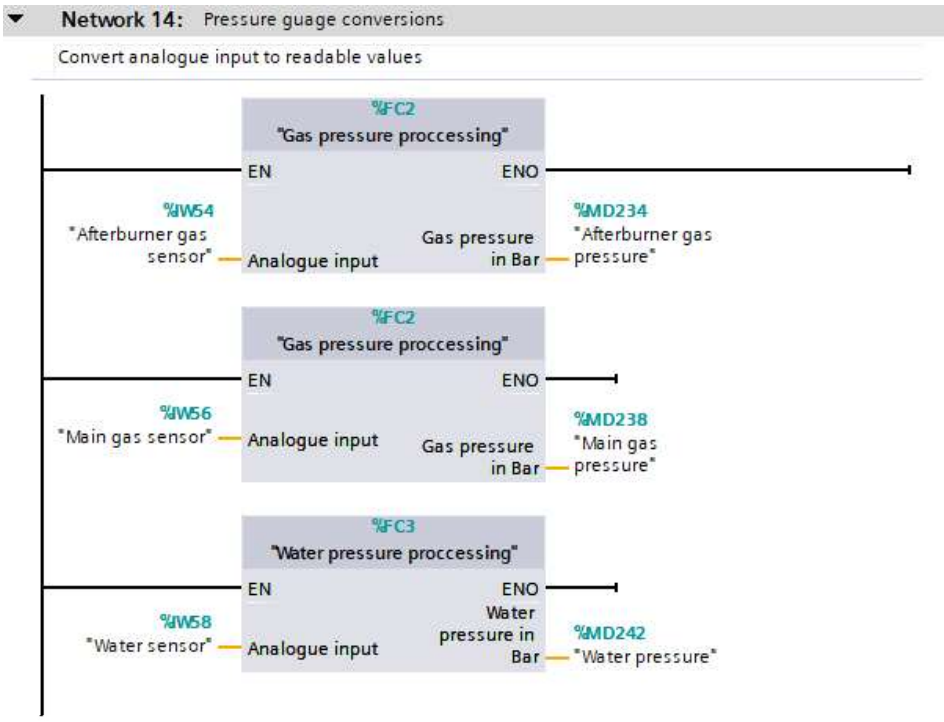

Figure 47 - Pressure gauge analogue input processing

4.5.2 Temperature control

The chosen control method for temperature was on/Off. To achieve this, the operator must input a desired set point for temperature. The program must then operate using a buffer zone called hysteresis. The hysteresis is formed by an upper and lower limit surrounding the set point. To allow the engineer to simply input the desired temperatures, the program had to automatically create the limits. This was achieved by creating function blocks to add and subtract a set value from the set point. For the prototype, the limits were set to 50°C above and below the set point. In a real application this range would be too large. To demonstrate the project, the large range accounts for the sensitivity of the potentiometers. Figure 48 shows the upper limit function block. The set temperature is input into an addition block, adding 50°C. As the temperature set input is an integer, the normalise function is once again used to convert it into a real.

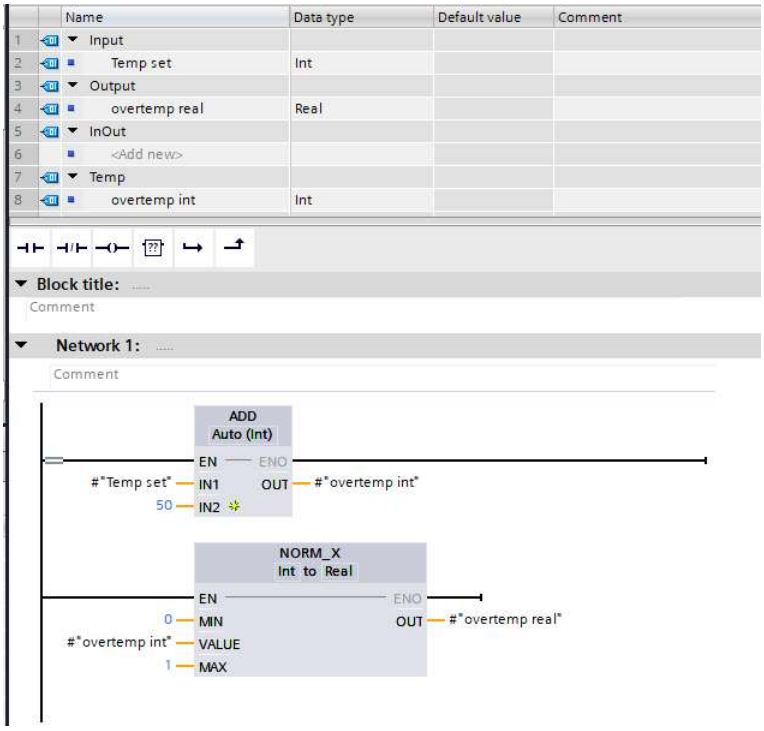

Figure 48 - Temperature upper limit function block

The same procedure was utilised for the lower limit only using a subtract function, shown in Figure 49.

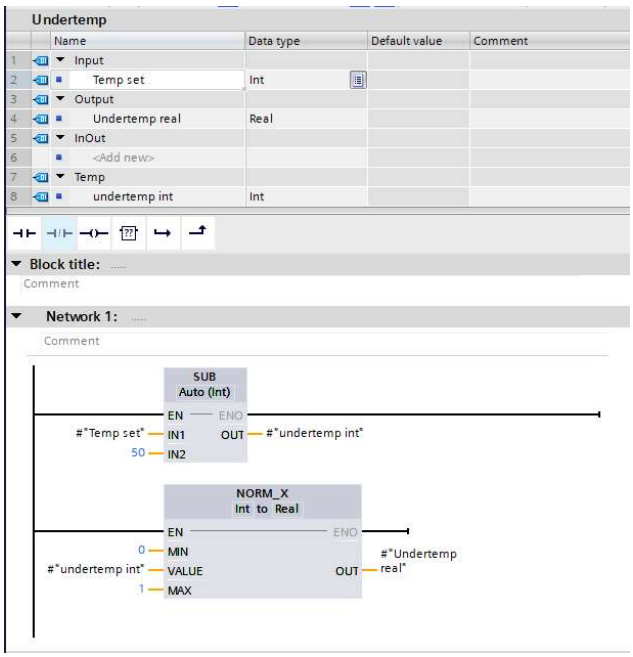

Figure 49 - Temperature lower limit set up function block

As the workpiece being overtemperature was designed to trigger an alarm, terminating the system, a tighter upper limit of 20°C was set for use as a warning, shown in Figure 50.

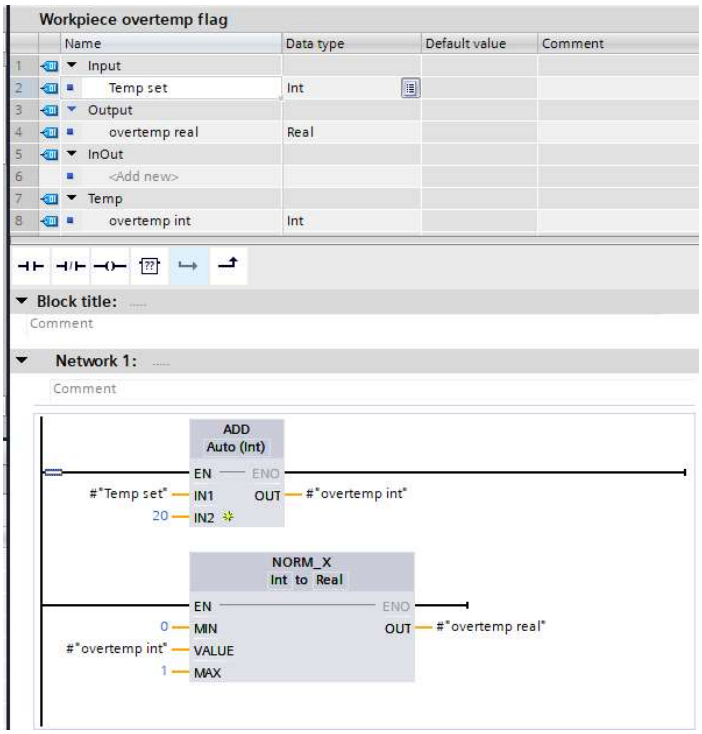

Figure 50 - Warning limit for work piece thermocouple

This function blocks were used in conjunction with the temperature set points for each thermocouple in the system, shown in Figure 51. The setpoints were input using HMI.

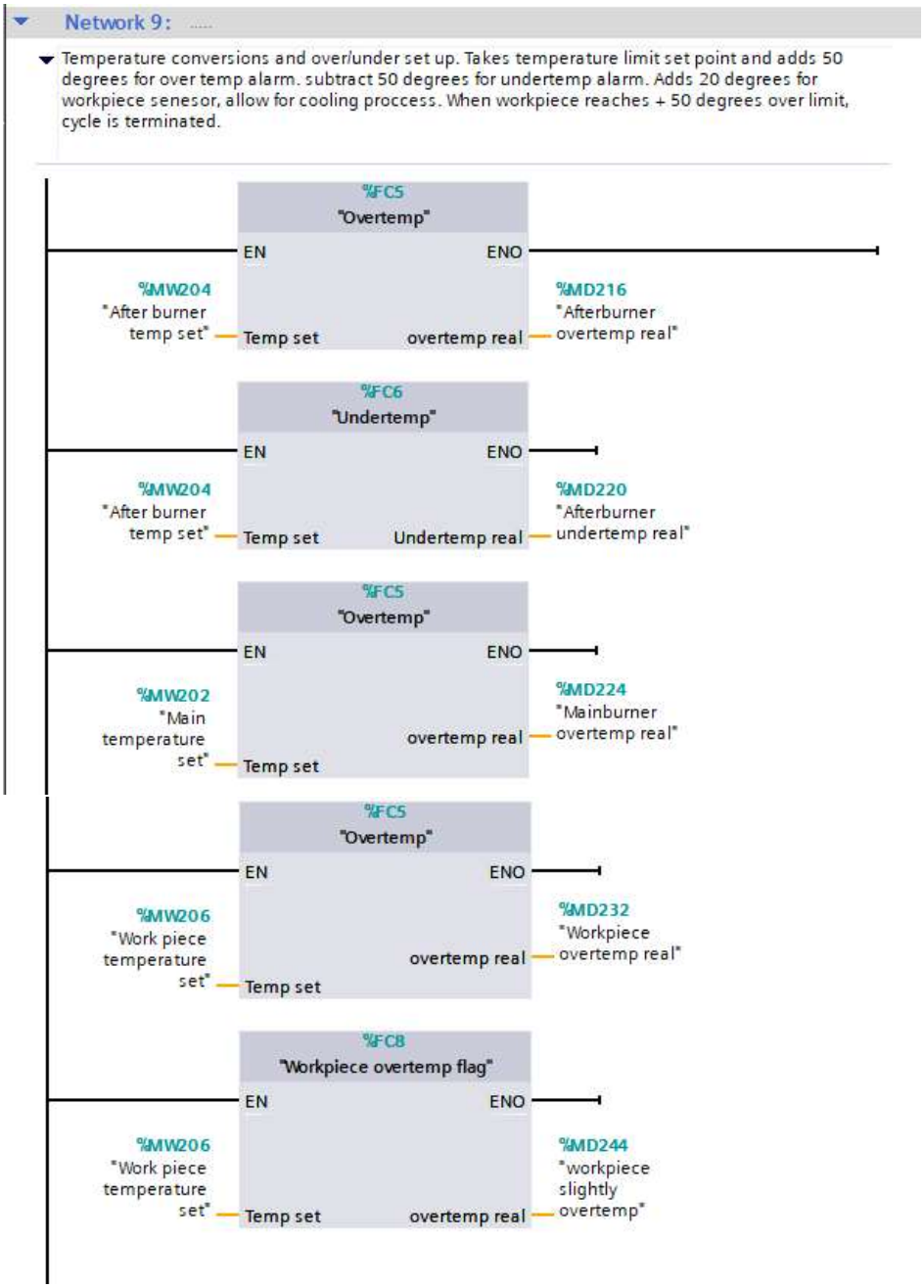

Figure 51 - Temperature hysteresis setting

4.5.3 cycle time control

The cycle time was designed to be input using the HMI screen. When implemented using this method, TIA registers the input in milliseconds. To overcome this and allow the operator to define the cycle time in hours, a function block was created to convert the input from hours to the appropriate number of milliseconds for the timer. This was achieved using multiplication functions as shown in Figure 52. The input time was multiplied by 60 to give time in minutes, then again to give time in seconds. It was the multiplied by 1000 to give time in milliseconds, which was then input into the cycle timer.

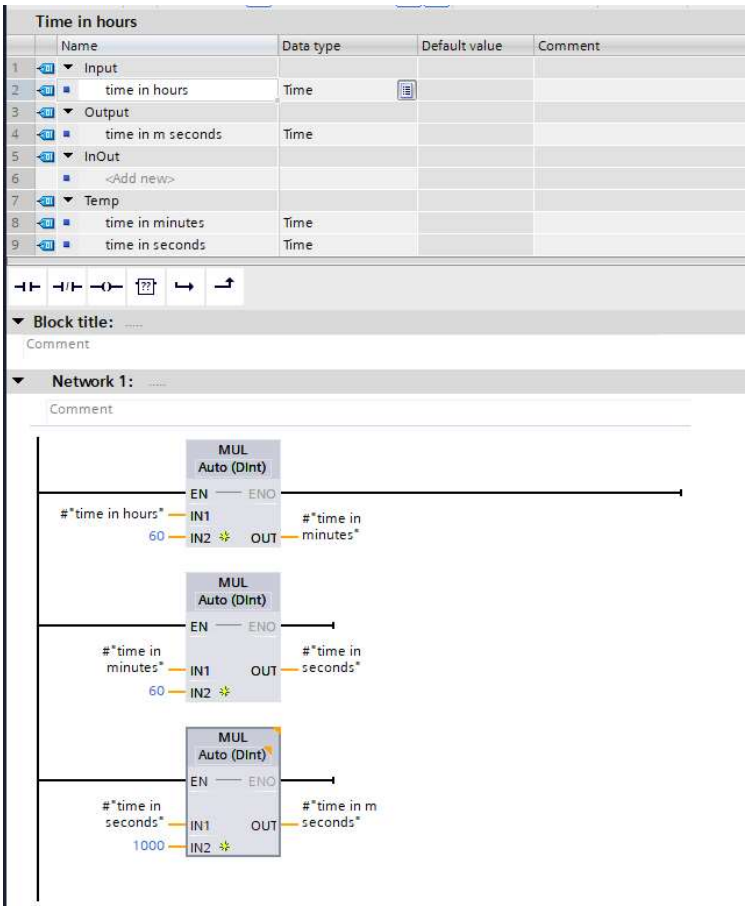

Figure 52 - Time conversion from hours to milliseconds

To display the time passed on the HMI screen, the reverse of this function had to be completed, shown in Figure 53.

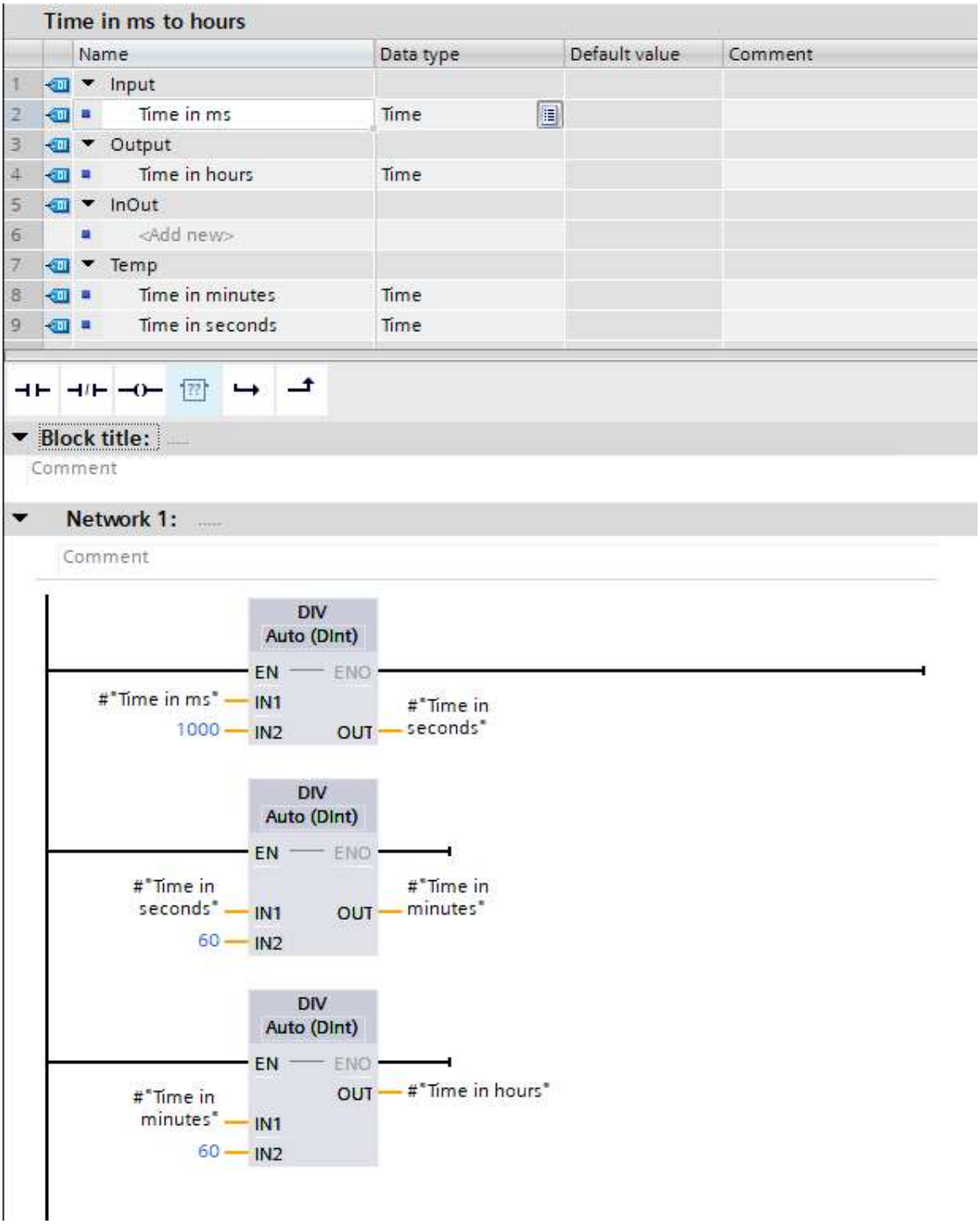

Figure 53 - Conversion from milliseconds to hours

4.5.4 gas pressure monitoring

To monitor gas pressures, comparators were used to compare the measured input to a set value. The lower limit for gas pressure was 0.0149 bar, the upper limit 0.027 bar. A “greater than” comparator was used for the upper limit and a “less than” comparator was used for the lower. This is shown in Figure 54. The outputs of the comparators are saved to the memory byte 300. All bits within this byte are reserved for warnings.

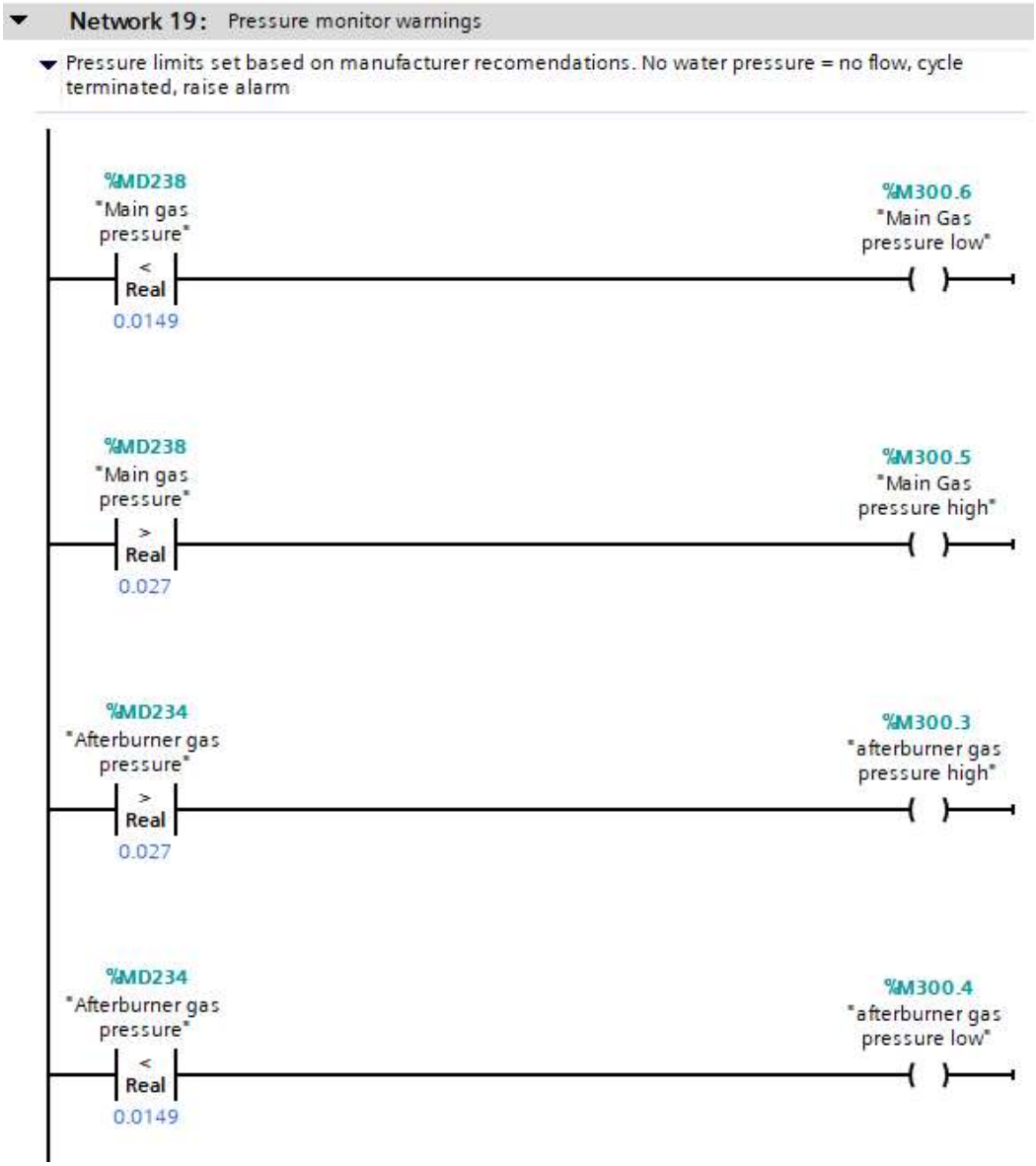

Figure 54 - Gas pressure monitoring

4.5.5 water pressure monitoring

Water pressure is monitored in the same way as gas pressure, using the upper limit of 6.9 bar and lower limit of 2.76 bar. Low water pressure is defined as an alarm and so is saved to the memory byte 500. An “equal to” comparator was used for the no water flow detector, set to 0. When the pressure is 0 the no water flag is triggered. To eliminate errors through momentary fluctuations in water pressure, a timer on function is used to delay the raising of a no water alarm. This prevents the system from shutting down due to sensor error, shown in Figure 55.

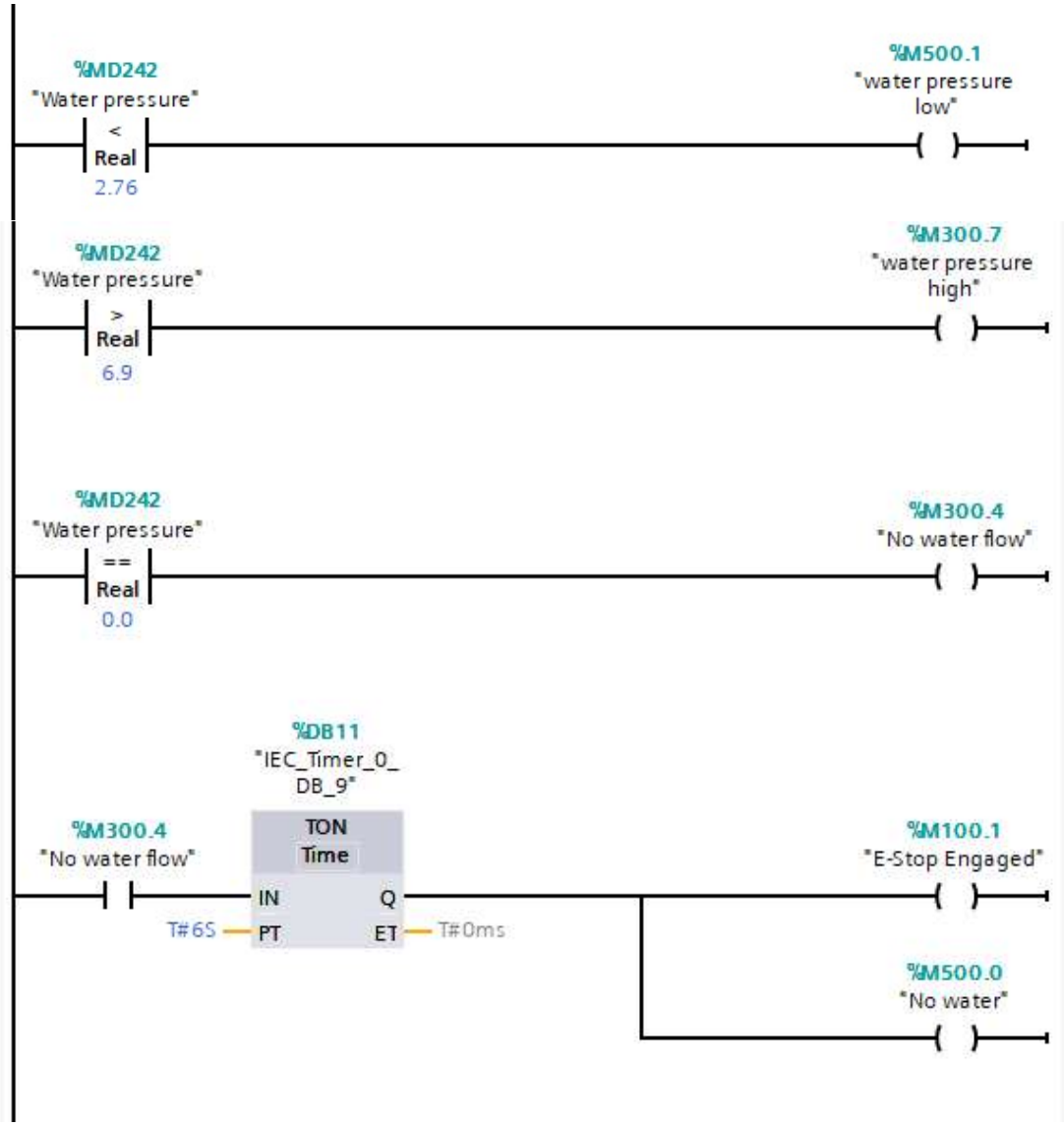

Figure 55 - Water pressure monitoring

4.5.6 Alarms and warnings bytes

All warnings and alarms were saved to specific bytes, as shown in Figure 56 and Figure 57.

Warnings

	Name	Data type	Address	Retain	Acces...	Writa...	Visibl...	Comment
1	Warnings	Byte	%MB300		✓	✓	✓	
2	Afterburner over temp	Bool	%M300.0		✓	✓	✓	
3	Warning flag	Bool	%M600.1		✓	✓	✓	
4	Afterburner undertemp	Bool	%M300.1		✓	✓	✓	
5	Mainburner overtemp	Bool	%M300.2		✓	✓	✓	
6	Main Gas pressure high	Bool	%M300.5		✓	✓	✓	
7	Main Gas pressure low	Bool	%M300.6		✓	✓	✓	
8	afterburner gas pressure high	Bool	%M300.3		✓	✓	✓	
9	afterburner gas pressure low	Bool	%M300.4		✓	✓	✓	
10	water pressure high	Bool	%M300.7		✓	✓	✓	

Figure 56- Warnings Byte tags

Alarms

	Name	Data type	Address	Retain	Acces...	Writa...	Visibl...	Comment
1	No water	Bool	%M500.0		✓	✓	✓	
2	alarms byte	Byte	%MB500		✓	✓	✓	
3	Alarm flag	Bool	%M600.0		✓	✓	✓	
4	Workpiece overtemp	Bool	%M500.2		✓	✓	✓	
5	Door open	Bool	%M500.3		✓	✓	✓	
6	Relief panel open	Bool	%M500.4		✓	✓	✓	
7	Afterburner malfunction	Bool	%M500.6		✓	✓	✓	Afterburner not heating (no ignition)
8	Main burner malfuction	Bool	%M500.7		✓	✓	✓	Main burner not heating (no ignition)
9	water pressure low	Bool	%M500.1		✓	✓	✓	

Figure 57 - Alarm byte tags

The bytes are used to control “flags” which are saved memory bits to be utilized elsewhere in the program. This is shown in Figure 58. The door interlock and pressure relief panel inputs are added to the alarm byte as normally closed inputs. This means when they are opened, they trigger the alarm. The alarm flag is then linked as shown in Figure 59 to the emergency stop function, meaning if an alarm is triggered the cycle stops. The start sequence shown in Figure 59 utilises a latch function, meaning once the start button is pushed the cycle start output is held on.

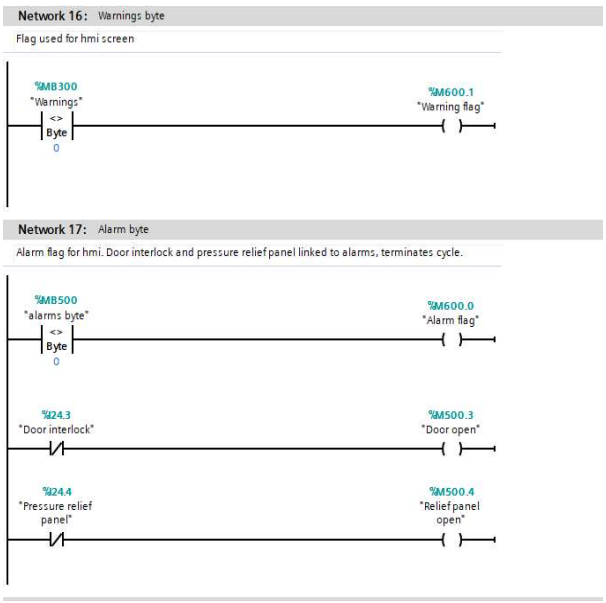

Figure 58 - Warning and alarm flags

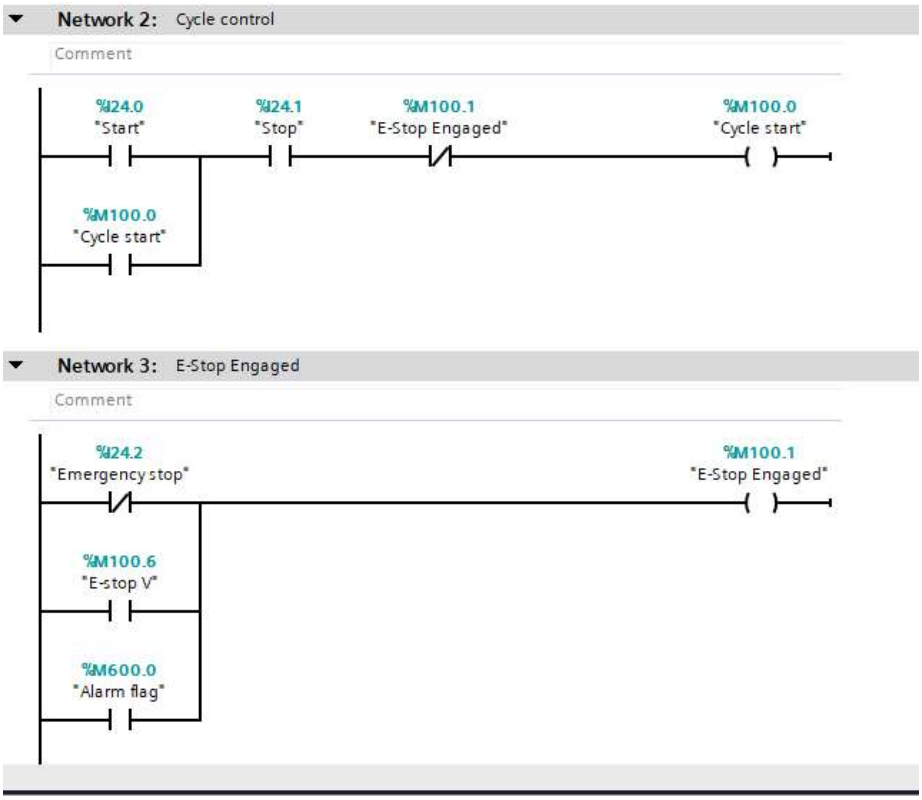

Figure 59 - Alarm triggers E-stop function

When the emergency stop is engaged, a move function is used to set the cycle timer to 0 seconds, terminating the cycle. This is shown in Figure 60.

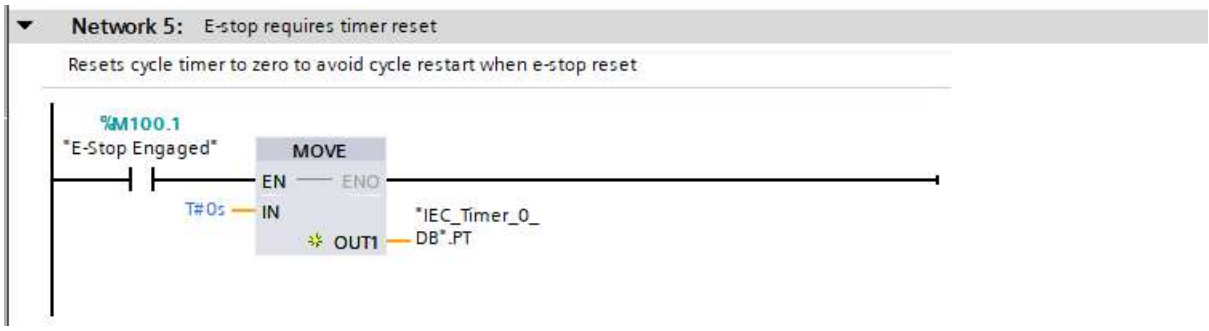

Figure 60 - Emergency stop function

4.5.7 Engineer input check

To prevent the cycle from starting without the necessary parameters input, an engineer's input check function was designed, shown in Figure 61. This sequence used comparators for each of the temperature set inputs to make sure the set points for each thermocouple had been input. It also used normally closed contacts for the pressure sensor's lower and upper warning limits. This meant that if the pressure was too low or too high, the sequence could not activate. Once all inputs were activated, the input ready memory bit was activated, turning on an indiactor on the HMI, telling the operator the system was ready for ignition. When the start button was pressed, the cycle start memory bit engages a pulse timer which starts the cycle timer as shown in Figure 62.

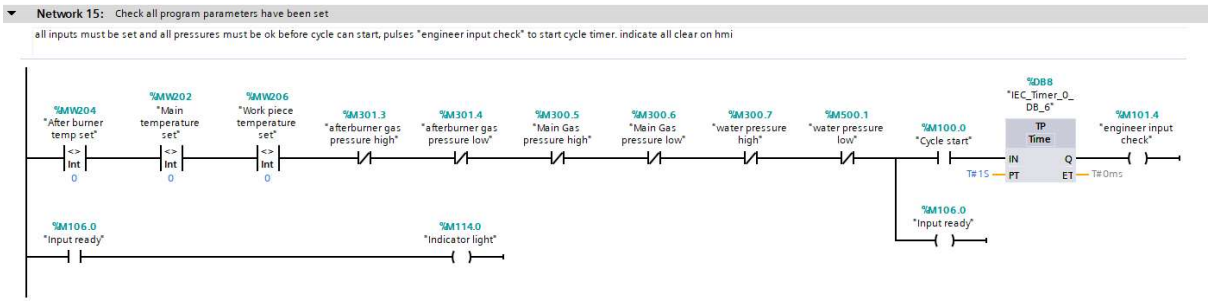

Figure 61 - Engineer's input check

The cycle timer activates the output “signal” which is used to start the ignition process of the afterburner, beginning the oven’s procedures. “Signal” is also used to turn on the afterburner malfunction flag after a small delay. The delay is required to allow the temperature to raise before checking for burner malfunctions.

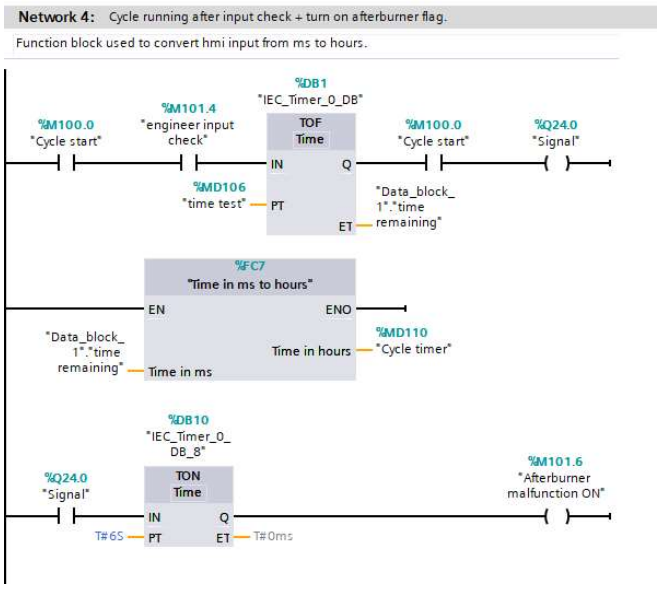

Figure 62 - cycle start sequence

4.5.8 Afterburner ignition and reignition sequence

Once the cycle has started through the output "signal," The afterburner gas valve is turned on. A short time delay is used to allow the gas to flow into the system before the ignition is triggered. After another delay to allow the flame to establish, the blower motor is turned on, distributing the heat. This process is shown in Figure 63.

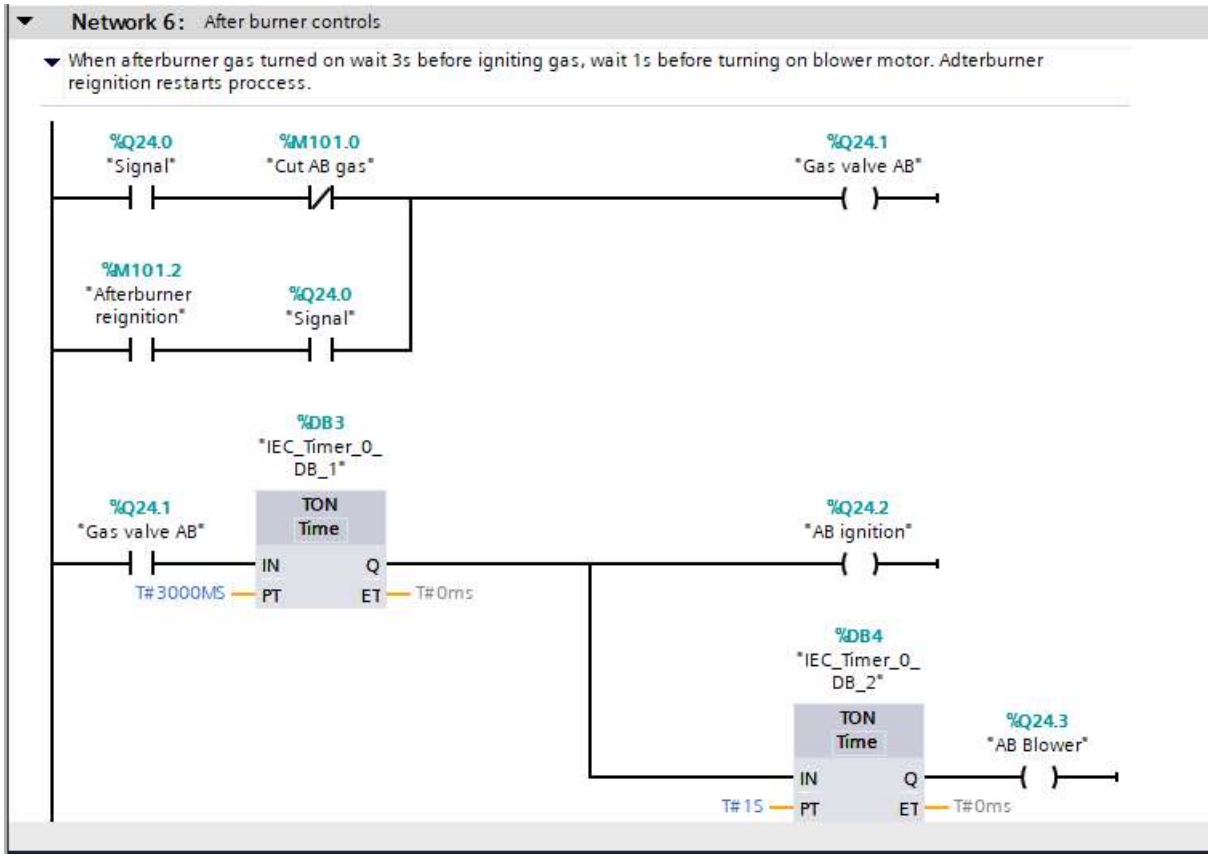

Figure 63 - Afterburner ignition sequence

Once the afterburner reaches the upper temperature limit, the gas is turned off by opening the normally closed contact “Cut AB gas.” To reignite the burner once the temperature has fallen, the normally closed contact “afterburner reignition” is opened as shown in Figure 64. These functions were achieved using comparators to compare the measured temperature to the set points. This is an important function in the on/off control methodology, allowing the burner to be switched off when the system is too hot, and then re-ignited when required. This network also includes the malfunction sequence. If the temperature of the burner is under temperature for more than 30 seconds, the afterburner malfunction alarm is triggered which stops the cycle. This prevents faults from no ignition or no gas.

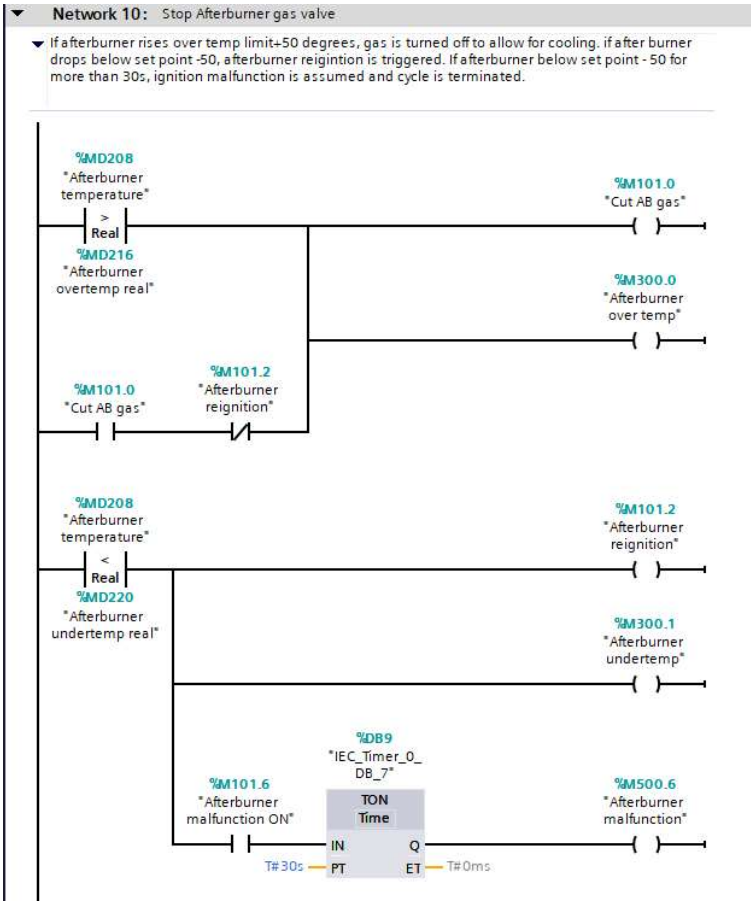

Figure 64 - Reignition cycle

4.5.9 Main burner ignition sequence

The main burner follows a slightly different control sequence, shown in Figure 65. Using a “greater than or equal to” comparator, the main burner is only turned on once the afterburner has reached its set point. To ensure the afterburner is adequetly up to temperature, a time delay is used before the gas valve is latched on. Once the gas is latched, after a short delay the ignition is triggered, giving the gas enough time to flow into the system. After another short delay, to establish the flame, the blower is turned on. The main gas valve can be turned off using the normally closed contact, “Cut main gas”, this is controlled by the over temperature control sequence in section 4.5.10.

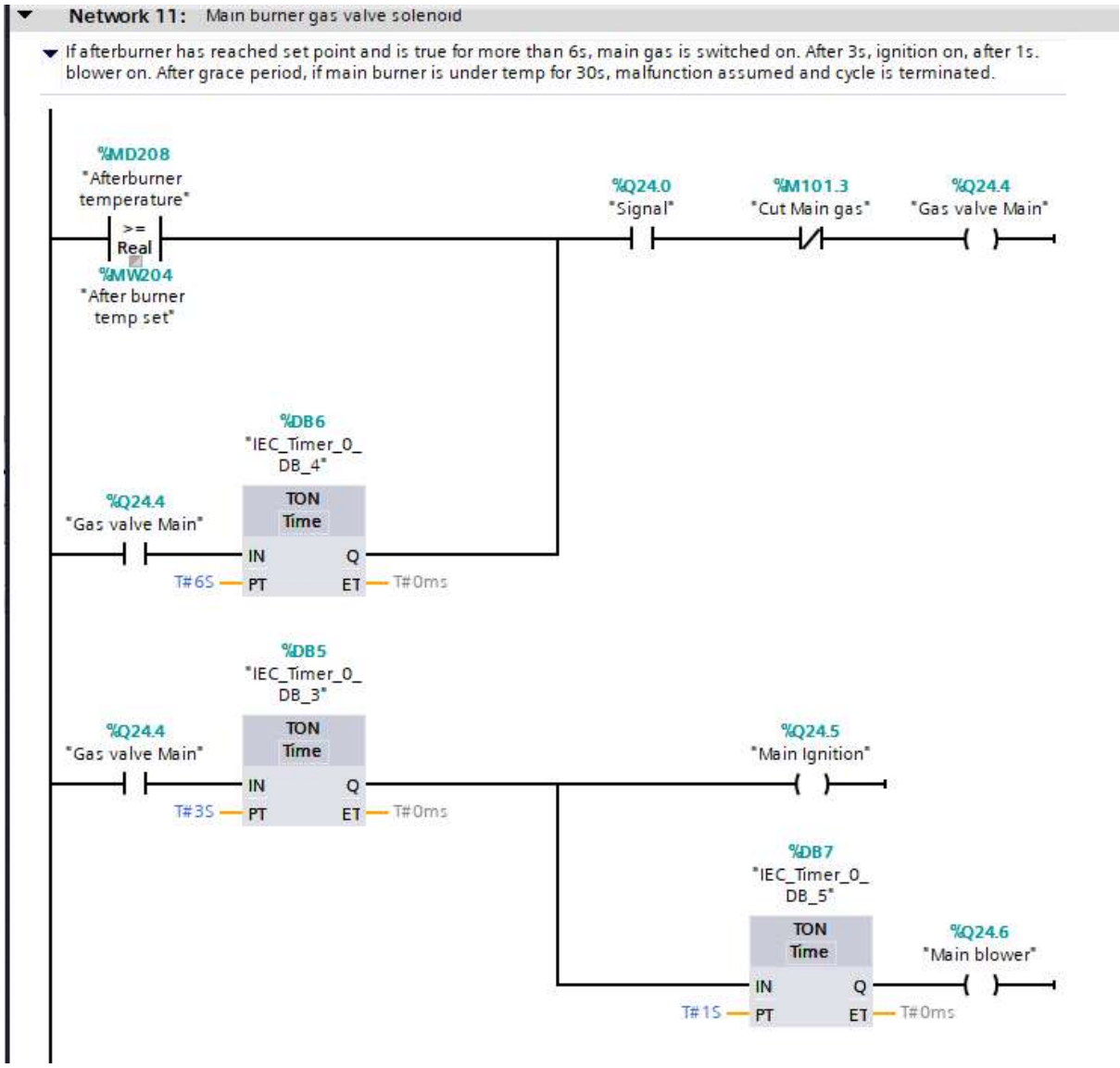

Figure 65 - Main burner control sequence

Figure 66 shows the main burner malfunction sequence. The malfunction flag is turned on after the main burner blower has been on for 12 seconds. This delay allows the burner to sufficiently reach temperature, avoiding false errors. Once the flag is active, the main malfunction alarm can be activated when the measured temperature is under the lower set limit for more than 30 seconds. This stops the cycle in the event of ignition or gas failure resulting in the main burner not heating.

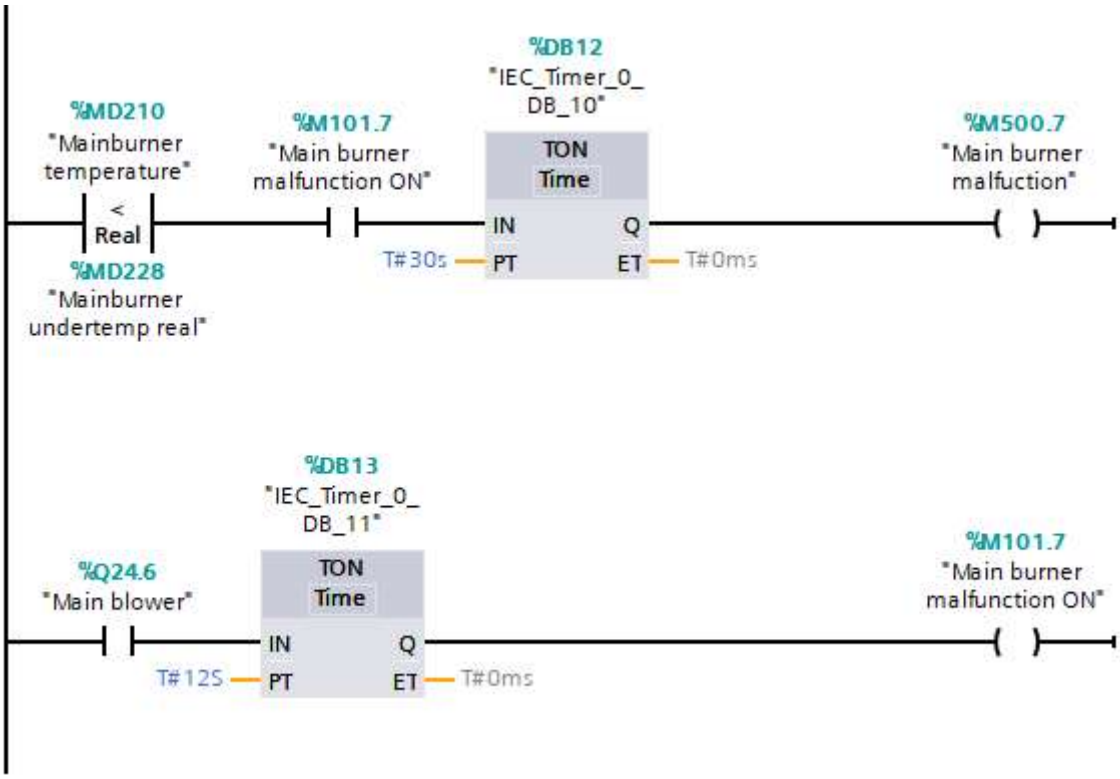

Figure 66 - Main burner malfunction sequence

4.5.10 Main burner and workpiece temperature control

Figure 67 shows the comparator used for the main burner over temperature flag. The upper limit for main burner temperature is compared with the temperature measurement using a “greater than or equal to” comparator.

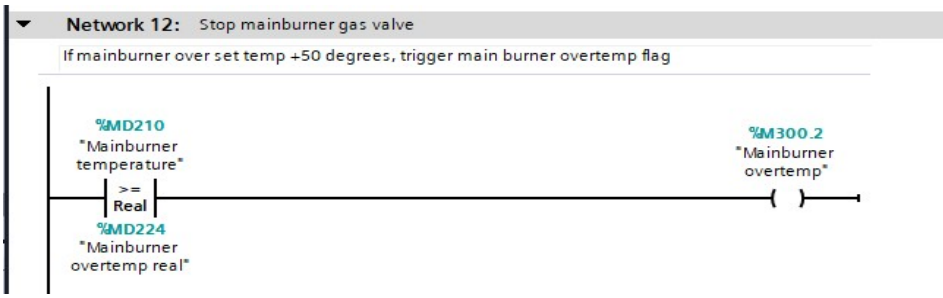

Figure 67 - Main burner over temperature flag

As discussed in section 4.5.2, the workpiece has two set limits for temperature. One is set at 20°C above set point and the other at 50°C above set point. The 20°C limit is labelled slightly overtemperature. If this is the case, or if the main burner is over the upper limit, the main gas is stopped, and the water valve is turned on. If the workpiece hits the 50°C upper limit, the workpiece over temperature alarm is triggered, which terminates the cycle. This is shown in figure 68.

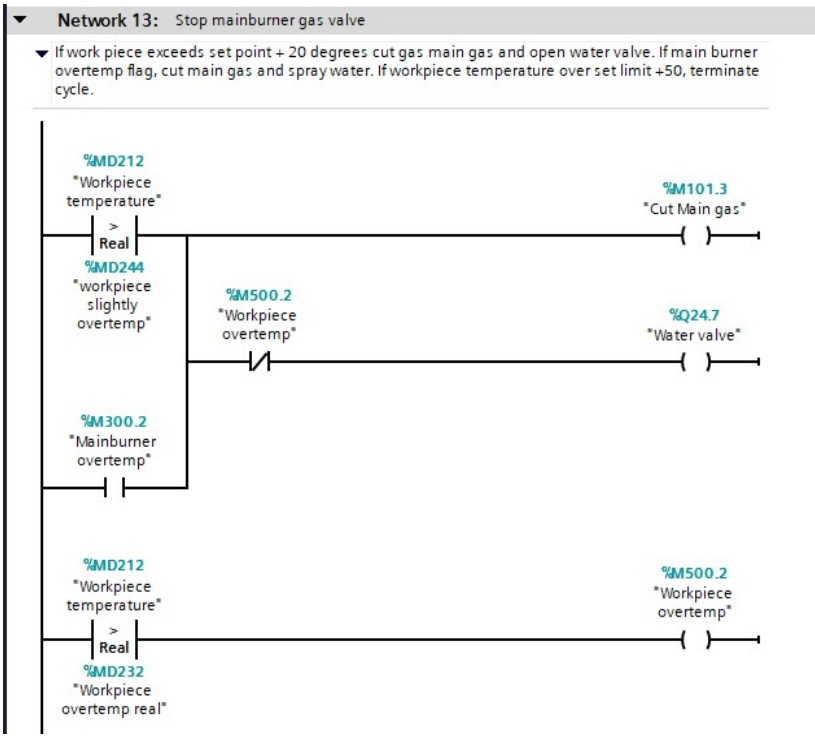

Figure 68 - Workpiece and main burner temperature control

4.5.11 System tags

The tags recorded in this section were for use in the simulation. Address labels were changed for the real prototype build and can be found in full in Appendix 3.

The input tags for the system are shown in Figure 69. Digital inputs are set as Boolean type data, meaning they operate as a binary function, either on or off [31]. The analogue inputs are set as a word, a word is a group of 16 bits, allowing the PLC to read the analogue signal digitally [31].

Inputs

	Name	Data type	Address	Retain	Acces...	Writa...	Visibl...	Comment
1	Start	Bool	%I24.0		✓	✓	✓	Start button
2	Stop	Bool	%I24.1		✓	✓	✓	Stop button
3	Emergency stop	Bool	%I24.2		✓	✓	✓	Emergency stop button
4	Door interlock	Bool	%I24.3		✓	✓	✓	Door interlock
5	Pressure relief panel	Bool	%I24.4		✓	✓	✓	Pressure releif panel
6	Afterburner thermocouple	Word	%IW48		✓	✓	✓	Analogue input 0-1000 degrees (0-27648)
7	Main burner thermocouple	Word	%IW50		✓	✓	✓	Analogue input 0-1000 degrees
8	Work peice thermocouple	Word	%IW52		✓	✓	✓	Analogue input 0-1000 degrees
9	Afterburner gas sensor	Word	%IW54		✓	✓	✓	Analogue input 0-1 bar
10	Main gas sensor	Word	%IW56		✓	✓	✓	Analogue input 0-1 bar
11	Water sensor	Word	%IW58		✓	✓	✓	Analogue input 0-10 bar

Figure 69 - System input tags

The output tags for the system are shown in Figure 70, these are also Boolean type data readings.

Outputs

	Name	Data type	Address	Retain	Acces...	Writa...	Visibl...	Comment
1	Signal	Bool	%Q24.0		✓	✓	✓	Cycle running
2	Gas valve AB	Bool	%Q24.1		✓	✓	✓	Afterburner gas valve solenoid
3	AB ignition	Bool	%Q24.2		✓	✓	✓	Afterburner ignition
4	AB Blower	Bool	%Q24.3		✓	✓	✓	Afterburner blower motor
5	Gas valve Main	Bool	%Q24.4		✓	✓	✓	Main burner gas valve solenoid
6	Main Ignition	Bool	%Q24.5		✓	✓	✓	Mainburner ignition
7	Main blower	Bool	%Q24.6		✓	✓	✓	Mainburner blower motor
8	Water valve	Bool	%Q24.7		✓	✓	✓	Water valve solenoid

Figure 70 - System output tags

Memory bits were used throuhout the program design. These are stored in the PLCs internal memory and are not connected to any physical inputs or ouptuts. The memory bits used are shown in Figure 71. The memory tags use a range of data types such as integrers, booleans, reals, and time values.

Memory

	Name	Data type	Address	Retain	Acces...	Writa...	Visibl...	Comment
1	Cycle start	Bool	%M100.0		✓	✓	✓	Start cycle
2	E-Stop Engaged	Bool	%M100.1		✓	✓	✓	E-Stop Engaged
3	E-stop V	Bool	%M100.6		✓	✓	✓	HMI E stop
4	Cycle time set	Int	%MW200		✓	✓	✓	Set cycle duration in ms for simulation
5	Main temperature set	Int	%MW202		✓	✓	✓	Set main temperature limit
6	After burner temp set	Int	%MW204		✓	✓	✓	Set afterburner temperature limit
7	Work piece temperature set	Int	%MW206		✓	✓	✓	Set workpiece temperature limit
8	Afterburner temperature	Real	%MD208		✓	✓	✓	Afterburner temperature reading
9	Mainburner temperature	Real	%MD210		✓	✓	✓	Main burner temperature reading
10	Workpiece temperature	Real	%MD212		✓	✓	✓	Workpiece temperature reading
11	Cut AB gas	Bool	%M101.0		✓	✓	✓	Stop Afterburner gas valve
12	Cycle time memory	Int	%MW208		✓	✓	✓	
13	Stop pressed	Bool	%M101.1		✓	✓	✓	
14	Afterburner overtemp real	Real	%MD216		✓	✓	✓	Afterburner temperature limit + 50 degrees
15	Afterburner undertemp real	Real	%MD220		✓	✓	✓	Afterburner temperature limit - 50 degrees
16	Afterburner reignition	Bool	%M101.2		✓	✓	✓	Afterburner re-ignition cycle start
17	Mainburner overtemp real	Real	%MD224		✓	✓	✓	Main burner temperature limit + 50 degree
18	Mainburner undertemp real	Real	%MD228		✓	✓	✓	
19	Workpiece overtemp real	Real	%MD232		✓	✓	✓	Workpiece temperature limit +50 degrees
20	Cut Main gas	Bool	%M101.3		✓	✓	✓	Stop mainburner gas valve
21	Afterburner gas pressure	Real	%MD234		✓	✓	✓	Afterburner gas pressure reading
22	Main gas pressure	Real	%MD238		✓	✓	✓	Main gas pressure reading
23	Water pressure	Real	%MD242		✓	✓	✓	Water pressure reading
24	engineer input check	Bool	%M101.4		✓	✓	✓	Check all program parameters have been s
25	time set test	Time	%MD101		✓	✓	✓	Set cycle time in hours
26	time test	Time	%MD106		✓	✓	✓	cycle time in hours
27	Afterburner malfunction ON	Bool	%M101.6		✓	✓	✓	Afterburner malfunction flag
28	Main burner malfunction ON	Bool	%M101.7		✓	✓	✓	Main burner malfuction flag
29	Cycle finish	Bool	%M105.0		✓	✓	✓	
30	Time remaining	Time	%MD105		✓	✓	✓	
31	Cycle timer	Time	%MD110		✓	✓	✓	Cycle timer
32	No water flow	Bool	%M300.4		✓	✓	✓	
33	workpiece slightly overtemp	Real	%MD244		✓	✓	✓	
34	Input ready	Bool	%M106.0		✓	✓	✓	
35	Indicator light	Bool	%M114.0		✓	✓	✓	

Figure 71 – System memory bits

4.6 HMI design

4.6.1 root screen

To allow the operator to interact with the system, a human machine interface (HMI) screen was designed, shown in Figure 72. This operator screen, or root screen, was designed to display the thermocouple readings, the system pressures as well as alerting the user to warnings and alarms. The root screen allowed the operator to choose from a selection of set cycle parameters to start the system, shown in Figure 73. Each option was designed to accommodate different requirements for different components, shown in Figure 74. The elapsed cycle time was also displayed in hours.

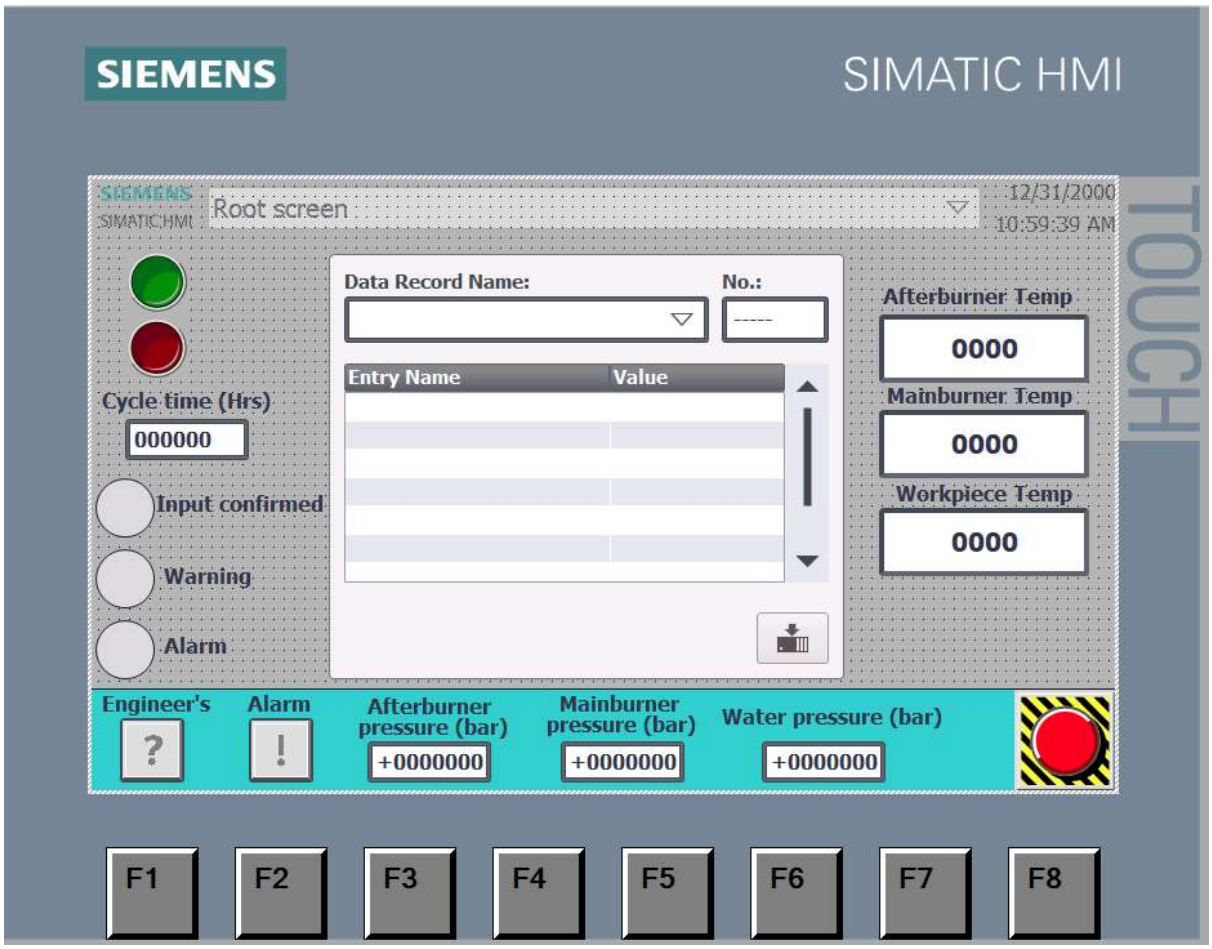

Figure 72 - Root screen

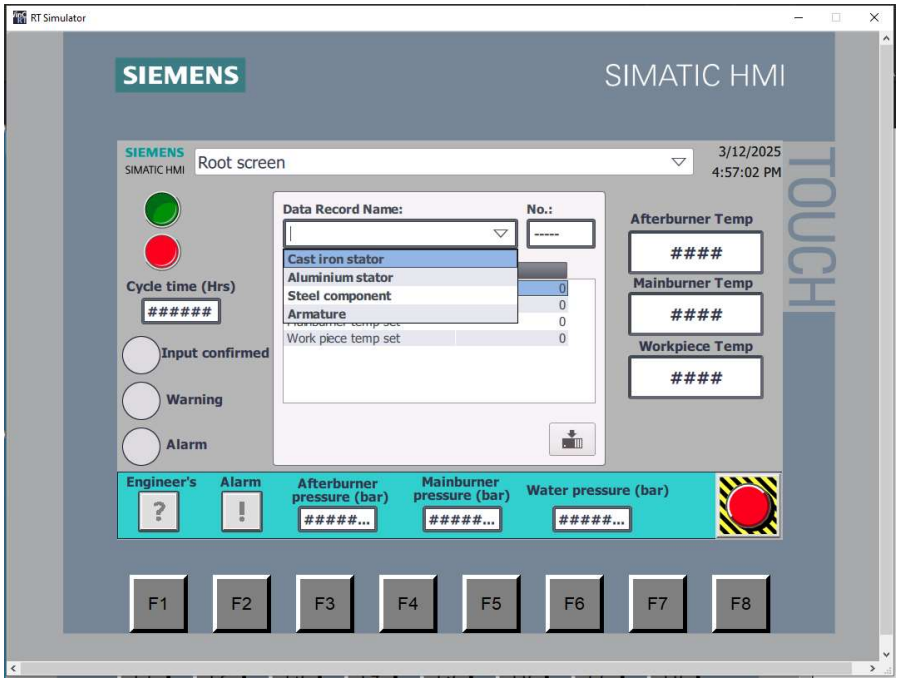

Figure 73 - Drop down menu for cycle selection

The different cycle parameters shown in Figure 74 were set based on the safe temperatures for different metals. Aluminium has a lower melting point and so the main burner set point and cycle time was lower [109].

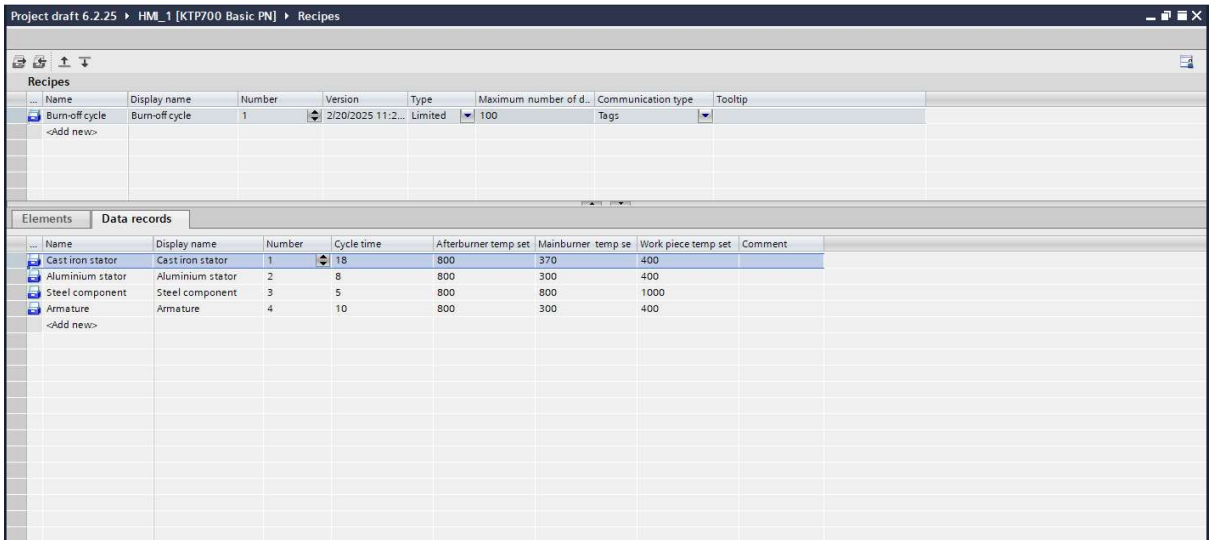

Figure 74 - Cycle parameters for different components

The warnings and alarms indicators illuminate to notify the operator, shown in Figure 75. Once all the required parameters were implemented, the input confirmed indicator illuminated, shown in Figure 76.

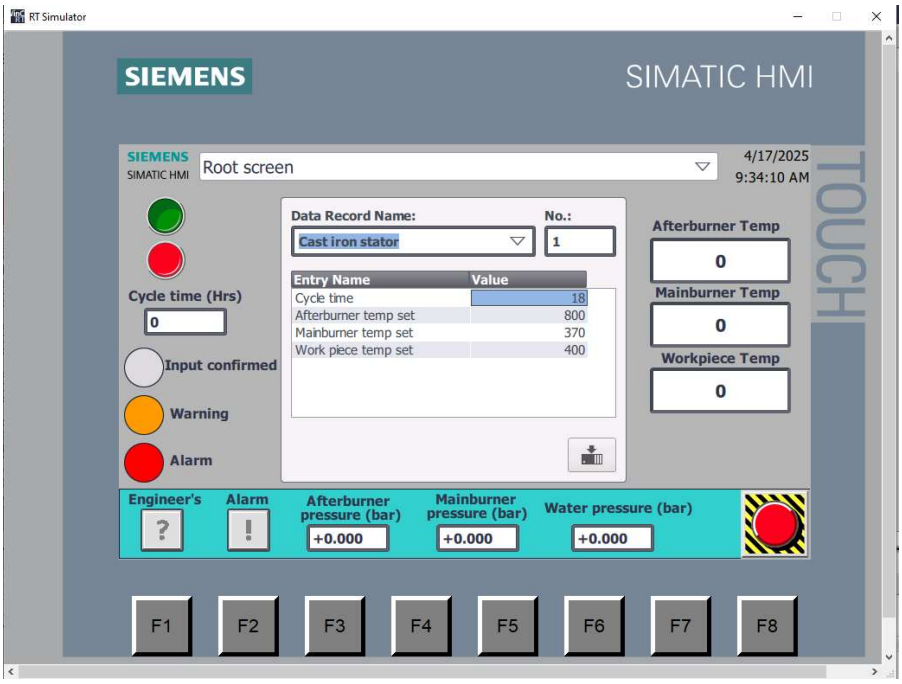

Figure 75 - Warning and alarm indicators

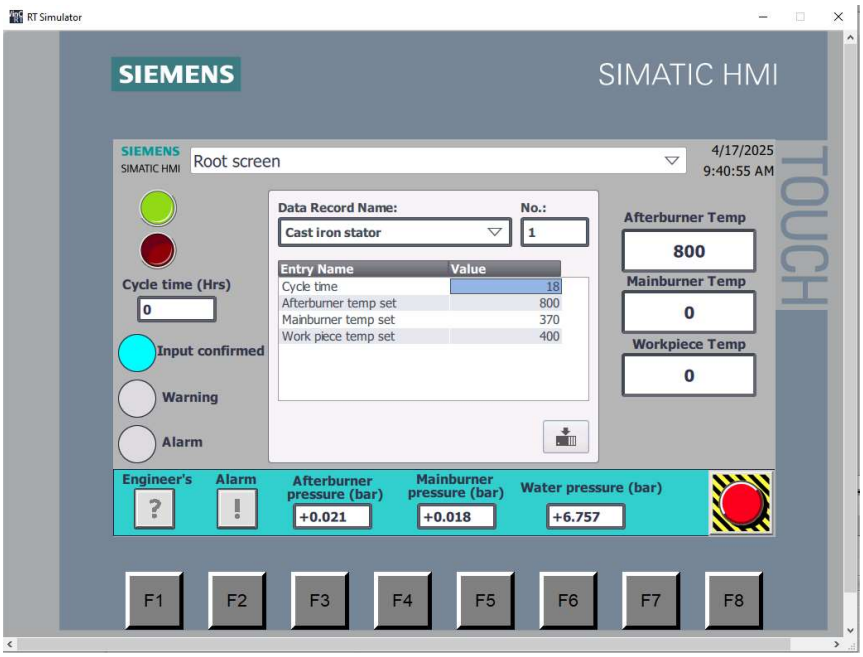

Figure 76 - Input confirmed indicator

The root screen was password protected so only the operator could start the cycle. This was implemented as a safety precaution to prevent unauthorised use of the oven, shown in Figure 77.

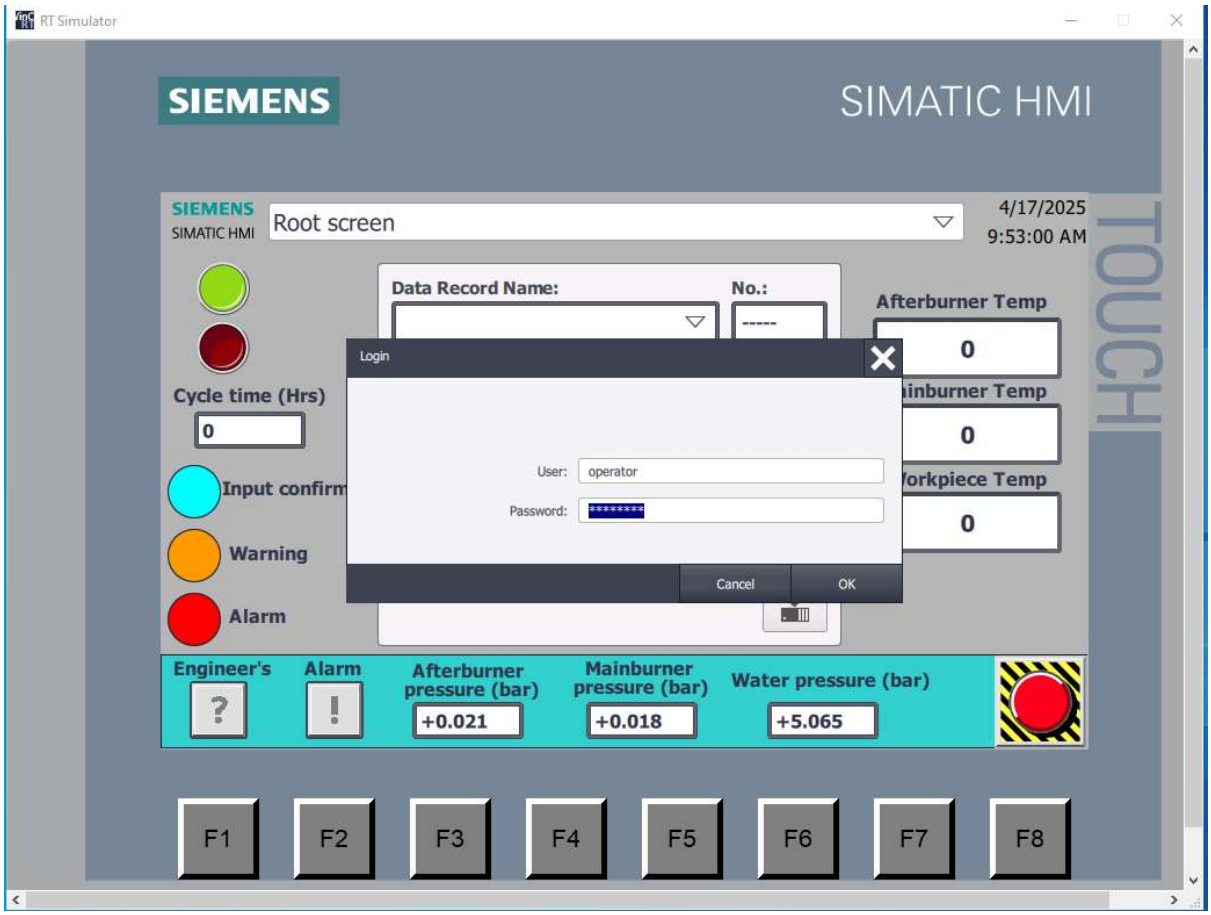

Figure 77 - Security for root screen

4.6.2 Engineer's screen

The engineer's screen was designed to be accessed only by the engineer and so was also password protected, as shown in Figure 78.

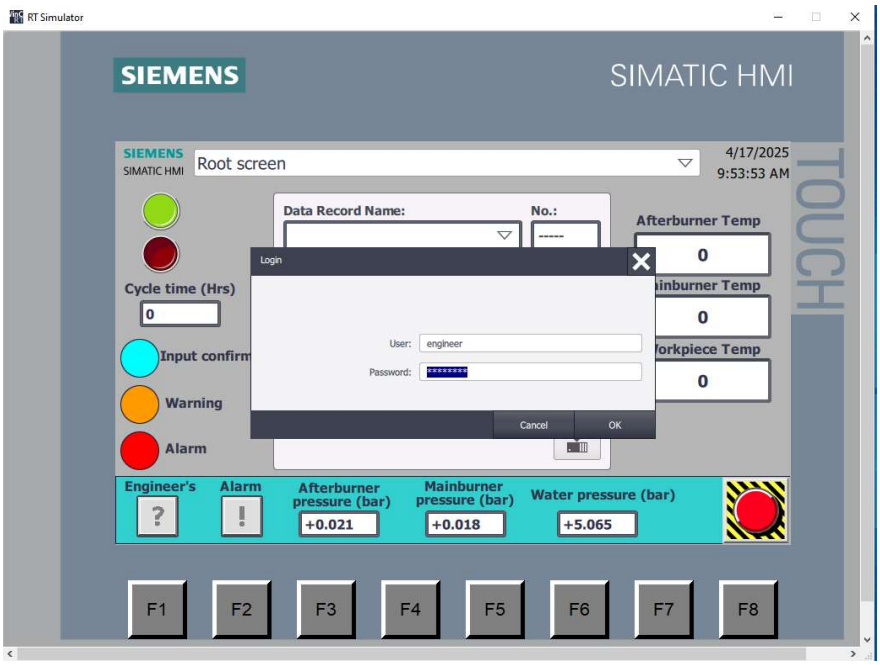

Figure 78 - Security for Engineer's screen

Once into the engineer's screen, the engineer has access to a custom controller where all set points and times can be implemented freely without selecting from a set menu, shown in Figure 79.

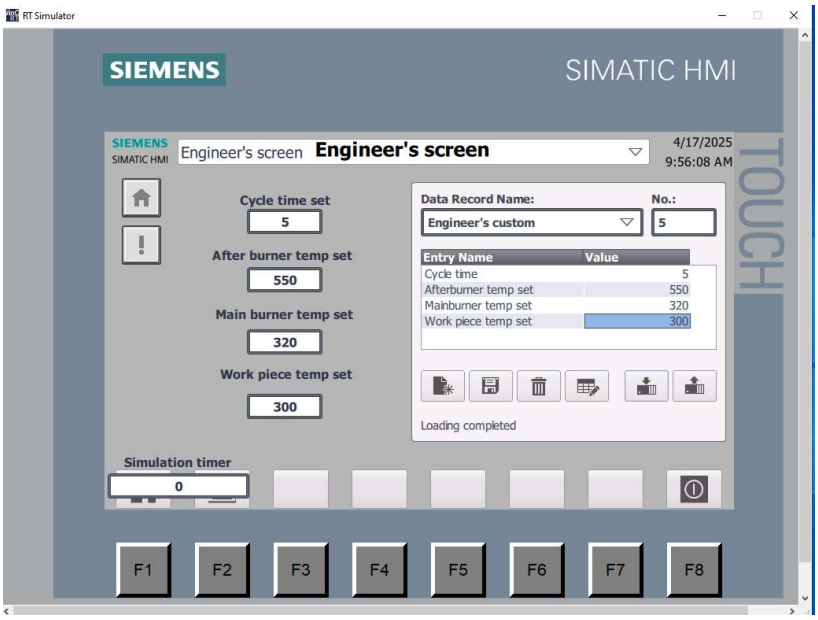

Figure 79 -Engineer's custom cycle control

4.6.3 Warning screen

The designed warning screen can be accessed from any screen without a password. Warnings are linked to the programmed memory outputs and illuminate when there is a fault, shown in Figure 80.

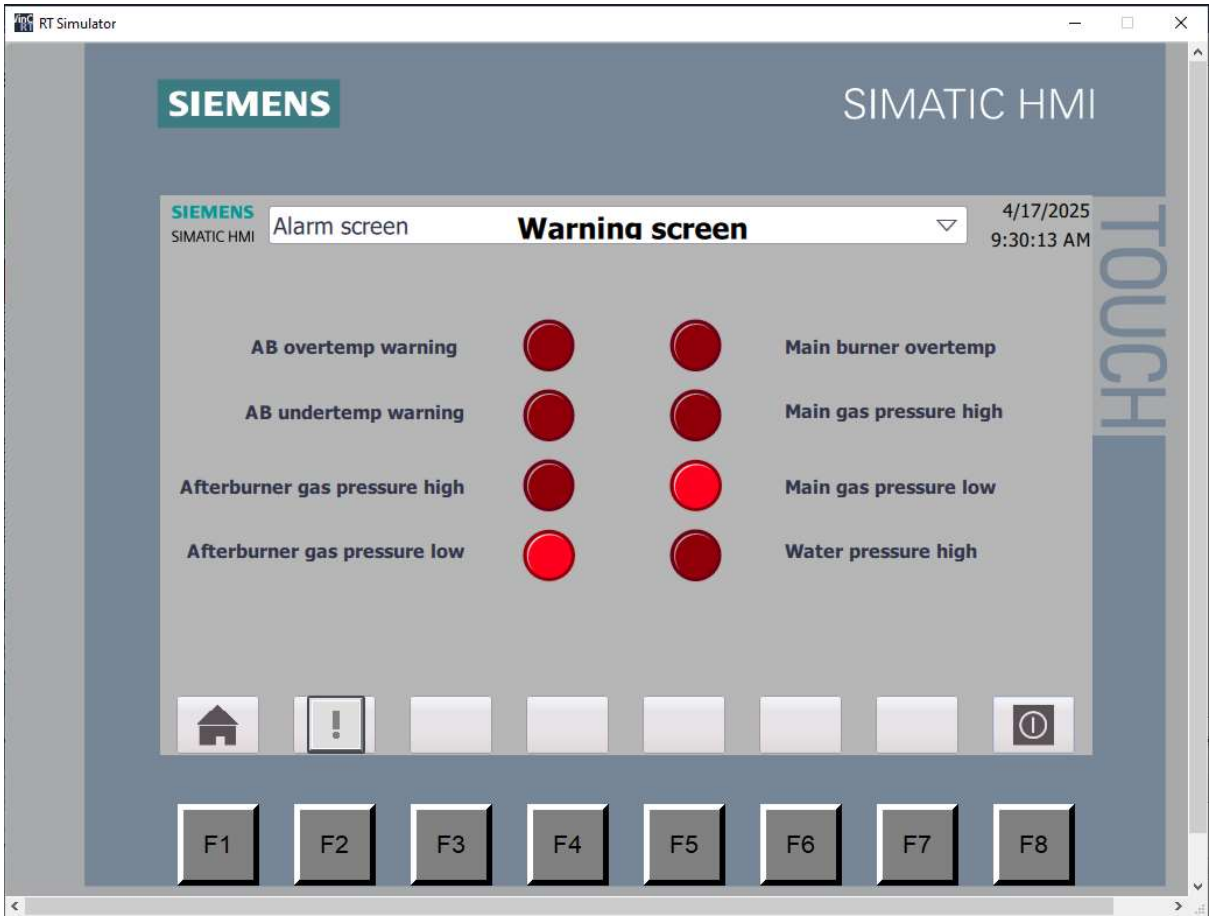

Figure 80 - Warning screen

4.6.4 Alarm screen

The alarm screen is accessed through the warning screen and is also unprotected. This is a safety design choice as any user must be able to access these screens to determine faults. The alarm indicators are linked to the corresponding memory tags in the main program and illuminate to indicator the fault cause, shown in Figure 81.

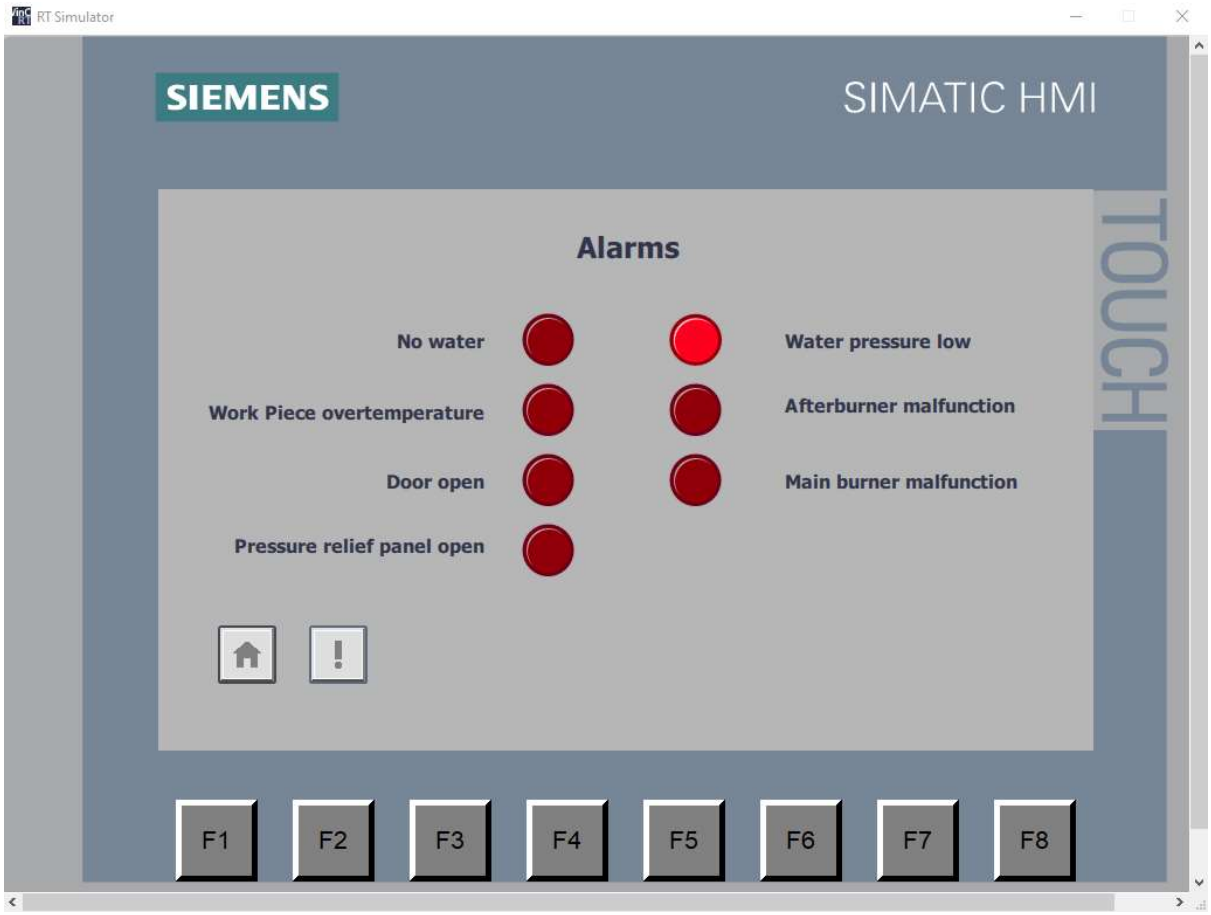

Figure 81 - Alarm screen design

4.6.5 HMI tags

The HMI tags were linked to the programs PLC tags, shown in Figure 82.

HMI tags

Name	Tag table	Data type	Connection	PLC name	PLC tag	Address
AB overtemp warning	Default tag table	Bool	HMI_Conne...	PLC_1	"Afterburner over tem...	
AB undertemp warning	Default tag table	Bool	HMI_Connectio...	PLC_1	"Afterburner undertemp"	
afteburner gas pressure high	Default tag table	Bool	HMI_Connectio...	PLC_1	"afterburner gas pressure.	
After burner temp set	Default tag table	Int	HMI_Connectio...	PLC_1	"After burner temp set"	
Afterburner gas pressure	Default tag table	Real	HMI_Connectio...	PLC_1	"Afterburner gas pressure"	
Afterburner gas pressure low	Default tag table	Bool	HMI_Connectio...	PLC_1	"afterburner gas pressure.	
Afterburner malfunction	Default tag table	Bool	HMI_Connectio...	PLC_1	"Afterburner malfunction"	
Afterburner temp	Default tag table	Real	HMI_Connectio...	PLC_1	"Afterburner temperature"	
Alarm on	Default tag table	Bool	HMI_Connectio...	PLC_1	"Alarm flag"	
Cycle controls	Default tag table	Bool	HMI_Connectio...	PLC_1	"Cycle start"	
Data_block_1_T1	Default tag table	Time	HMI_Connectio...	PLC_1	Data_block_1.T1	
Door open	Default tag table	Bool	HMI_Connectio...	PLC_1	"Door open"	
engineer check	Default tag table	Bool	HMI_Connectio...	PLC_1	"Indicator light"	
E-stop Depressed	Default tag table	Bool	HMI_Connectio...	PLC_1	"E-Stop Engaged"	
E-stop HMI	Default tag table	Bool	HMI_Connectio...	PLC_1	"E-stop V"	
Main burner temp	Default tag table	Real	HMI_Connectio...	PLC_1	"Mainburner temperature"	
Main burner temp set	Default tag table	Int	HMI_Connectio...	PLC_1	"Main temperature set"	
Main gas pressure	Default tag table	Real	HMI_Connectio...	PLC_1	"Main gas pressure"	
Main gas pressure high	Default tag table	Bool	HMI_Connectio...	PLC_1	"Main Gas pressure high"	
Main gas pressure low	Default tag table	Bool	HMI_Connectio...	PLC_1	"Main Gas pressure low"	
Mainburner malfunction	Default tag table	Bool	HMI_Connectio...	PLC_1	"Main burner malfuction"	
Mainburner over temp	Default tag table	Bool	HMI_Connectio...	PLC_1	"Mainburner overtemp"	
No water flow	Default tag table	Bool	HMI_Connectio...	PLC_1	"No water"	
Pressure relief panel missing	Default tag table	Bool	HMI_Connectio...	PLC_1	"Relief panel open"	
Tag_ScreenNumber	Default tag table	UInt	<Internal tag>		<Undefined>	
Time remaining	Default tag table	Time	HMI_Connectio...	PLC_1	"Cycle timer"	
time set test	Default tag table	Time	HMI_Connectio...	PLC_1	"time set test"	
Warning	Default tag table	Bool	HMI_Connectio...	PLC_1	"Warning flag"	
Water pressure	Default tag table	Real	HMI_Connectio...	PLC_1	"Water pressure"	
Water pressure high	Default tag table	Bool	HMI_Connectio...	PLC_1	"water pressure high"	
Water pressure low	Default tag table	Bool	HMI_Connectio...	PLC_1	"water pressure low"	
Work piece temp	Default tag table	Real	HMI_Connectio...	PLC_1	"Workpiece temperature"	
Work piece temp set	Default tag table	Int	HMI_Connectio...	PLC_1	"Work piece temperature ..	
Workpiece overtemp	Default tag table	Bool	HMI_Connectio...	PLC_1	"Workpiece overtemp"	

Figure 82 - HMI tags

4.7 – Data logging

Some of the advantages of PLC control listed by Whitelegg [20], were the data logging capabilities. Recording the temperatures and cycle times of different processes allowed their engineers to evaluate the system and determine the most effective and efficient times and temperatures. This data logging was implemented into the HMI screen, allowing the user to record the temperatures and timings of each cycle to a USB for future evaluation. This data logging was designed to trigger using the HMI start button as shown in Figure 83.

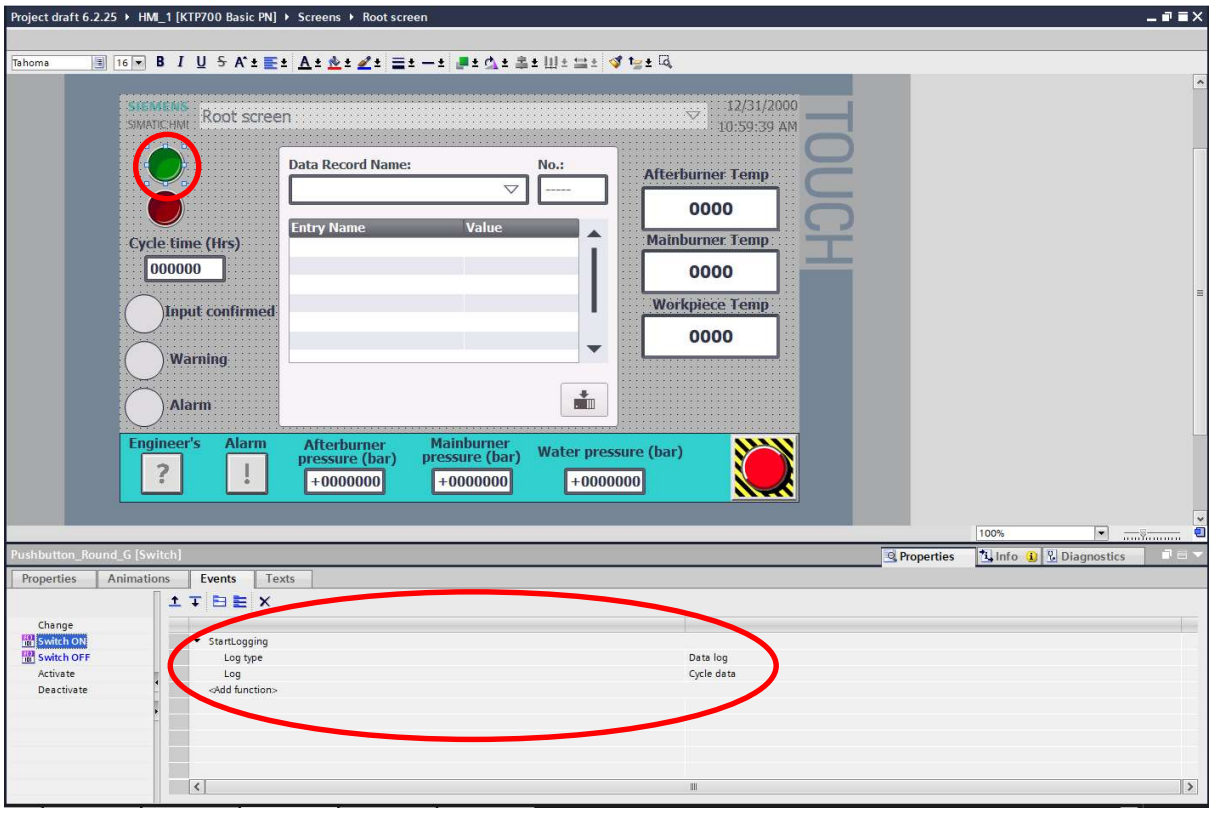

Figure 83 - Data logging

The desired data for recording is shown in Figure 84, listing all thermocouple temperatures as well as the set points for temperature and cycle time.

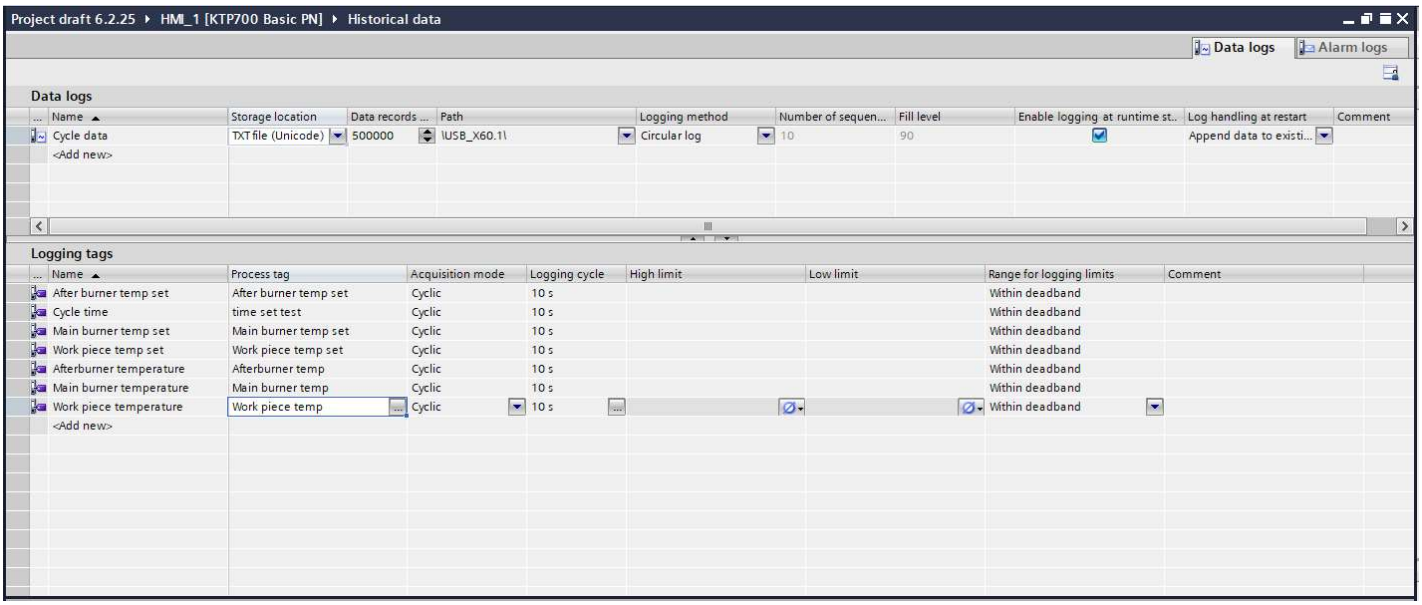

Figure 84 - Data logging data entries

Chapter 5 – Implementation

5.1 Simulation

To test the PLC program, a simulation was created in Factory IO, full evidence of this can be found in appendix 4. To illustrate the flow of gas and water, conveyor belts were used. To simulate the interlock and pressure relief panel, interlock doors were used. To simulate the temperature and pressure measurements, potentiometers were chosen. To simulate the ignition sequence, a stack light on each gas conveyor was utilised. The light turned red for ignition and then green for the blower motor. A control panel was built to simulate the start, stop and emergency stop buttons in the system. A warning light was used to signal the cycle running. The whole factory design is shown in Figure 85. The two conveyors together represent the after burner and main burner gas lines. The single conveyor represents the water line. Each conveyor has a control panel with a potentiometer, used to control the pressures.

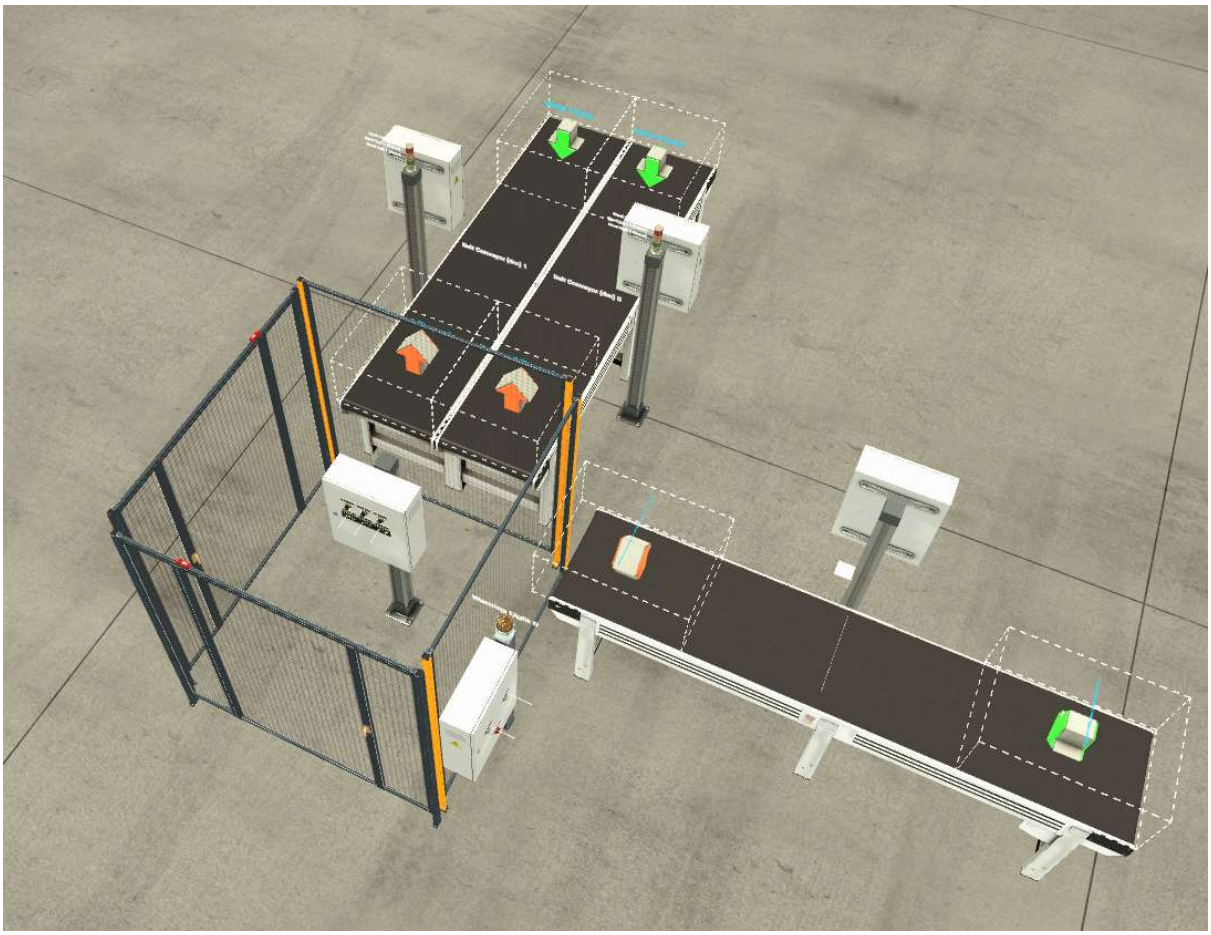

Figure 85 – Full factory design

The control panel and cycle running signal light is shown in Figure 86.

Figure 86 - Main control panel

The two interlocks, and thermocouple control panel are shown in Figure 87. The three potentiometers are used to toggle the values for the afterburner, main burner, and work piece thermocouples.

Figure 87 - Door interlock, pressure relief panel and thermocouple control simulation

The functioning system is shown in Figure 88 with both gas conveyors running with the ignition and blower indicator stack lights on.

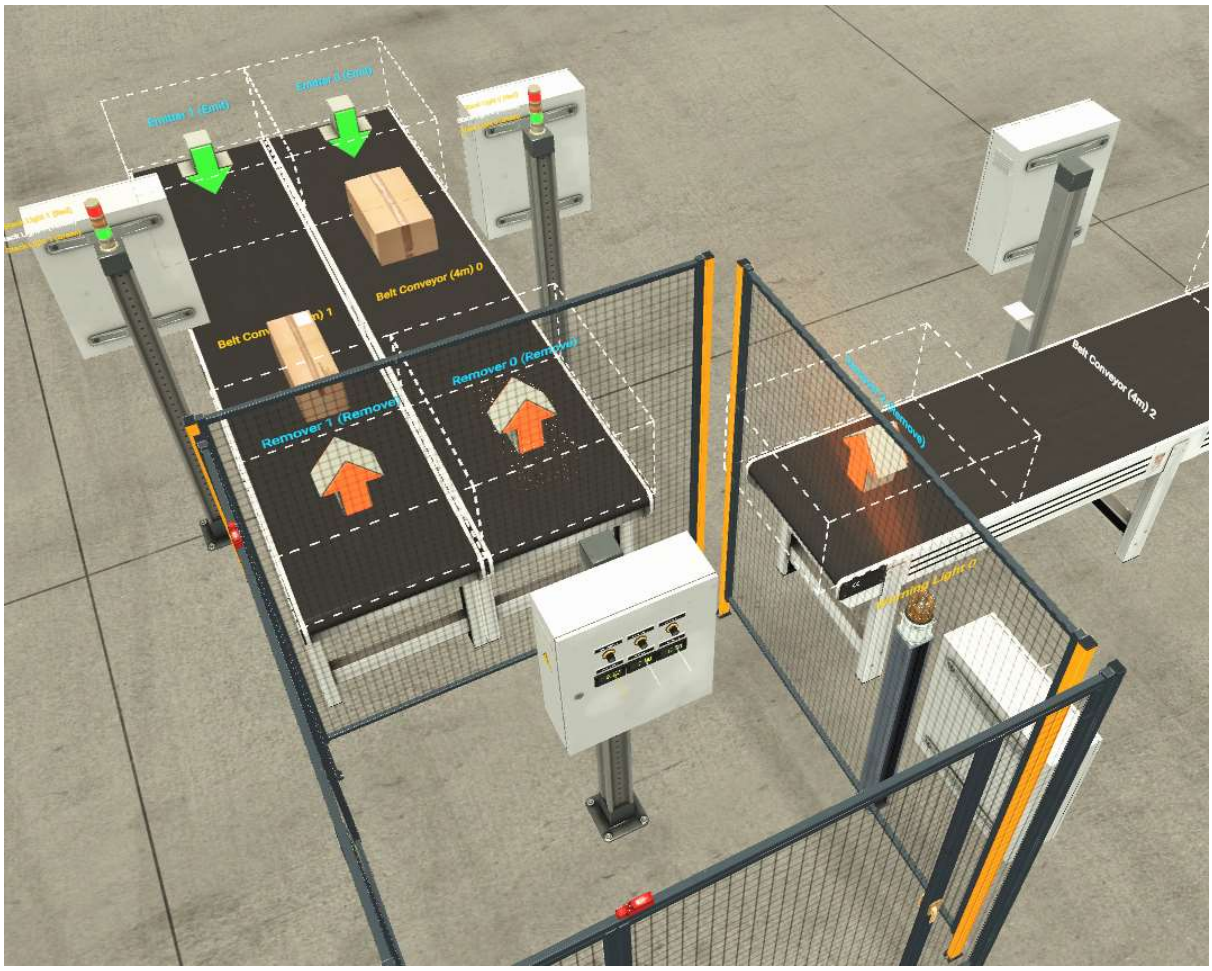

Figure 88 - Functioning simulation

5.1.1 simulation testing

To test the program using the simulation, all operating scenarios were trialled. All fault conditions were implemented to make sure the warning and alarms systems worked as required. Upon this testing, it was discovered that an oversight had been made. When the burner malfunction was triggered, it terminated the cycle as required but the alarm indicator only flashed once. To overcome this and hold the alarm indicator lamp on, a latch was implemented as shown in Figure 89 and Figure 90. To reset the alarm, a normally closed contact was used linked to the stop button.

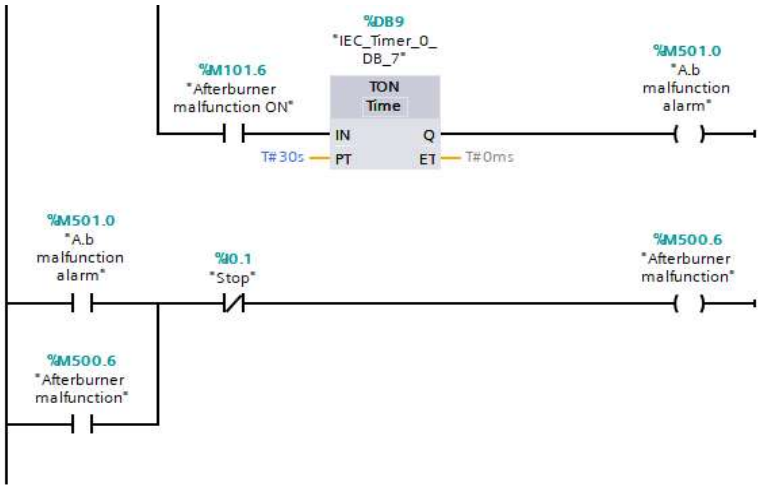

Figure 89 - Latch added to afterburner malfunction alarm

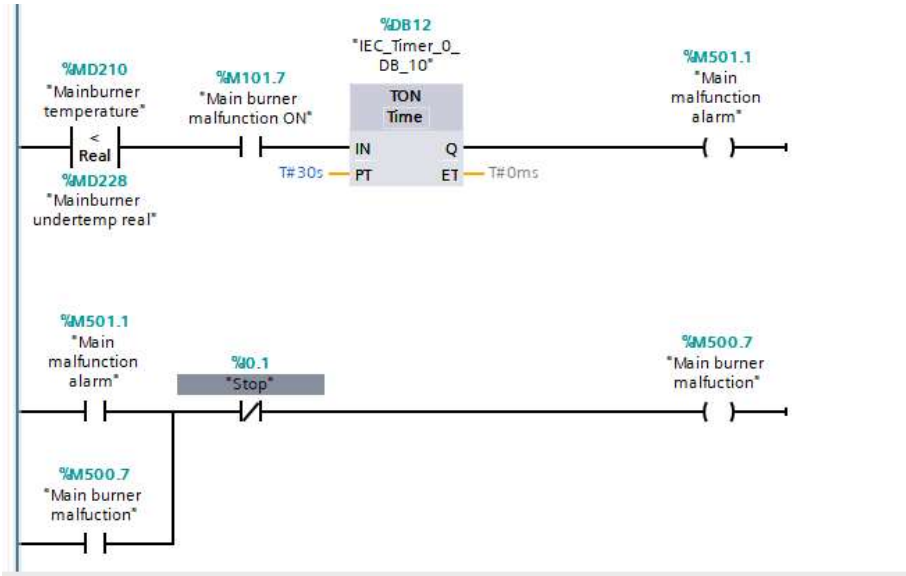

Figure 90 - Latch added to main burner malfunction alarm

5.2 Prototyping

Following the successful simulation, the prototype was constructed to demonstrate the project. The components were mounted to a demonstration board as shown in Figure 91 and wired as shown in the wiring diagram shown in Figure 39. The prototype was connected to a PC to test the program. It was discovered that the potentiometers were not reading as expected, this was because they were being supplied by the main 24V instead of the 10V required. To solve this, a voltage regulator was implemented to step down the 24V to 10V. An LM317 adjustable voltage regulator was selected.

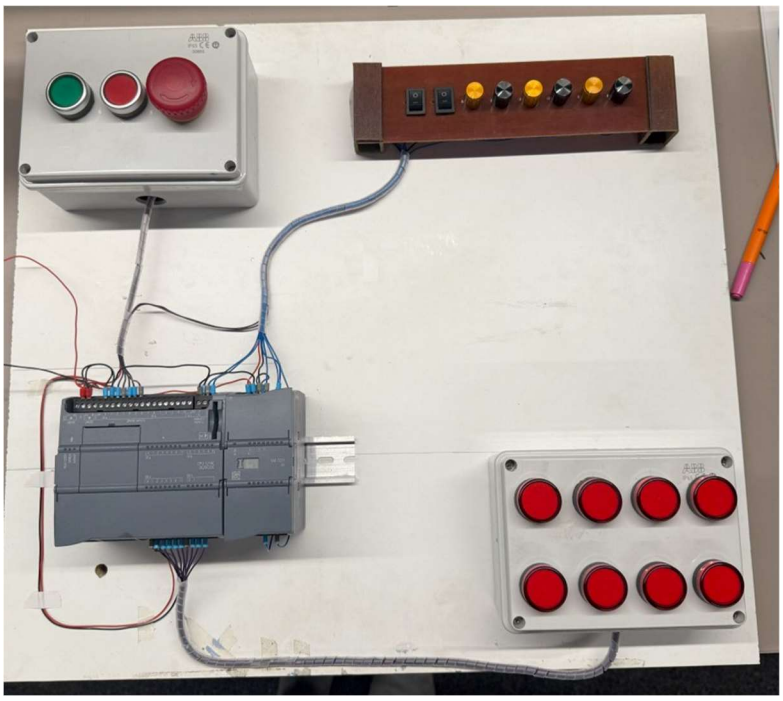

Figure 91 - First prototype test

The recommended circuitry for the LM317 given in the data sheet is shown in Figure 92 [110].

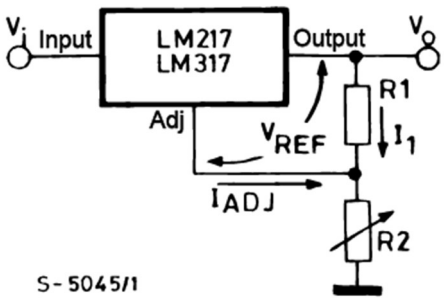

Figure 92 - Voltage regulator recommended circuitry [110]

To calculate the required resistance values the following formula was used, as provided in the datasheet [110].

Vout = VRef x (1 + R2/R1) [110]

Where VRef is given as 1.25V and R1 is 240Ω, the formula can be rearranged to find the value for R2 [110]. Vout is the desired output voltage of 10V.

10V = 1.25V x (1 + R2/240Ω)

7 = R2/240Ω

R2 = 7 x 240Ω

R2 = 1680Ω (1.6kΩ closest standard value)

After implementing the voltage regulator to provide the potentiometers with a 10V supply, the system functioned as expected. The HMI screen was then installed to the prototype and all inputs and outputs were labelled as shown in Figure 93. More detailed photographs of the prototype build can be found in Appendix 5.

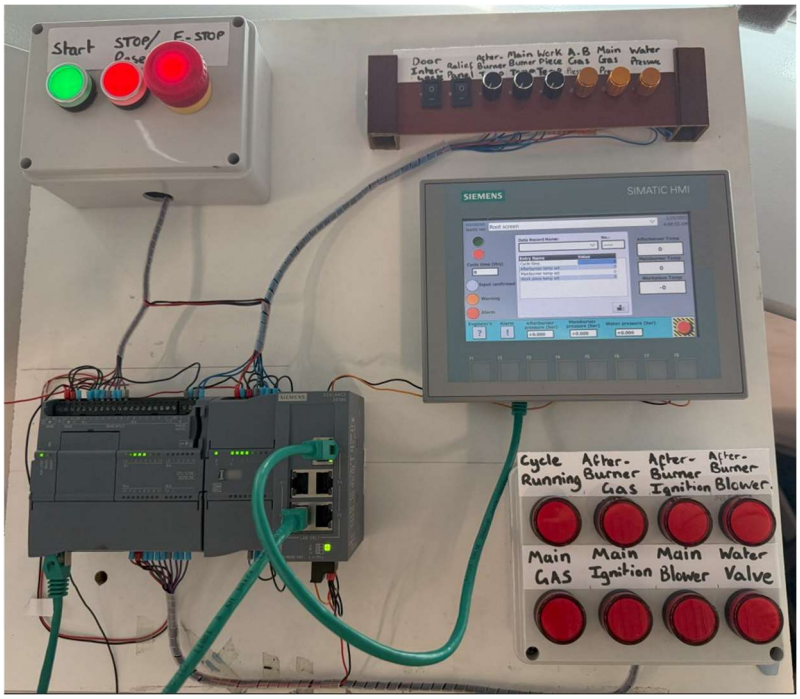

Figure 93 - Finished prototype

5.2.1 Final test

To test the finished prototype, all possible working scenarios were executed. Each warning and alarm condition was implemented to ensure the required outcome was reflected. The temperature control was analysed to ensure the burners were paused and re-ignited as necessary to ensure the temperature stayed within the programmed hysteresis. Safety features like the door interlock, pressure relief panel, and emergency stop were tested ensuring they adequately terminated the cycle. After testing, it was realised that the when the burner ignition was triggered, it was held on. In a real system, this would result in the electrode firing repeatedly. This would have to be amended in future iterations of the project possibly incorporating a pulse feature to pulse the ignition. Incorporating a sensor to sense the flame would provide an efficient solution.

Overall, the system functioned as required. The interface allowed the operator to effectively control the operation of the burn-off cycle, whilst also displaying key information like elapsed cycle time, temperature readings and pressure measurements.

Chapter 6 – Operator's comments

After testing the prototype, the control interface was presented to the two oven operators at Eriks Swansea for feedback. Table 19 and Table 20 lists the operator's feedback [111] [112].

6.1 Operator 1

Table 19 - Operator 1, feedback [111]

Pros	- Easy to operate - All cycle information on one screen
Cons	- Expensive to implement - Could be difficult to train older operators on the new equipment
Comments	A beneficial upgrade to the current outdated control system.

6.2 Operator 2

Table 20 - Operator 2, feedback [112]

Pros	- Drop down selection menu good idea
Cons	- E-stop on screen not labelled
Comments	Implement more specific options for drop down menu. For example, set run times for different kW rating of motors to save energy and time.

6.3 Feedback analysis

The operators feedback was mostly positive, praising the HMI design for its ease of use and the benefits of the drop-down selection for cycle times [111] [112]. Operator 2 suggested more specific parameters for the drop-down menu, tailoring to different motor kW ratings [112]. This suggestion would be beneficial as it would allow less experienced engineers to select the most efficient cycle, saving fuel and time. This would make for a more sustainable and environmentally friendly burn-off process, cutting down on wasted energy. This proposed feature could be easily implemented using the built in datalogging feature designed. After compiling a database, the drop-down menu could be upgraded to adequately accommodate for different rated motors. These additional cycles could be added with ease using the engineer's screen.

Chapter 7 – Evaluation

After testing the functionality of the prototype, the success of the project was evaluated. The designed prototype was capable of controlling the system requirements of the burn-off oven. The ignition and re-ignition programs ensured the temperature remained within the hysteresis range of the programmed set points. The HMI design allowed the operator to choose from a set of pre-programmed cycle parameters, avoiding the overheating of motors which was proven to lead to core losses [11]. The implementation of password protection resulted in a safer system, allowing only authorised personnel to operate the oven. The data collection incorporated into the HMI screen provided the ability to construct a database for different sized motor's burn requirements. This capability helps the operator consistently observe energy efficient burn cycles, while also preventing overheating of motors leading to core loss.

As the project was only a prototype, providing a proof of concept, real world results measuring efficiency losses in motors could not be calculated. The designed control method and interface does however still meet the aim of the project, as it offers better control over the burn off cycle. This control would ensure limited efficiency losses in rewound motors if implemented. The addition of the workpiece thermocouple allows for careful monitoring of the actual motor. The customisation offered through the engineer's screen allows the operator to continuously improve the cycle parameters, reviewing previous cycles, consistently and effectively producing adequate results.

The main cause of efficiency losses was determined through literature review to be excessive heat during the rewind process [10]. This satisfied the primary objective of the project. The control system of the burn-off oven at Eriks was analysed and highlighted as shortcoming. The burn-off process was analysed enabling the design of a more effective control system, capable of limiting efficiency losses in rewound motors. A Prototype was designed and built showcasing the proposed control system upgrade. This undertaking satisfied the main objectives of the project.

The final objective of the project was to implement the upgrade into the workplace. Originally, full support was given to construct and implement a control system. Due to uncertainties with the longevity of the workplace, funding and support for the upgrade was rescinded. As a result of this, the final objective of the project was not met, and a prototype control system was presented instead.

If the project were to be repeated, there are several things that could have been done differently. As mentioned, the ignition control system could have been upgraded. The control system for temperature could have also been improved to more effectively limit hysteresis. During the project, unforeseen commitments lead to scheduling conflicts. If repeated, more care could have been taken in the project planning and time management.

Chapter 8 – Conclusion

The task was set to limit efficiency losses in rewound motors. Extensive research was carried out, determining that the main cause of efficiency loss was overheating of motor cores during the rewind process [8]. It was discovered that inadequate control of the burn-off cycle was contributing to these efficiency losses [7]. To satisfy the aim of the project, the engineer set out to design a more effective control system for the burn-off oven.

After research into existing systems, it was discovered that some manufacturers experienced a range of benefits from utilising PLC control [20] [21] [22]. After deciding to design a PLC system, the control method was analysed. After consideration, on/off control was selected for its effectiveness and ease of implementation, allowing the engineer to create an adequate PLC prototype.

Following careful component selection, a system was designed using Siemens TIA, programmed using ladder logic. Several key functions were designed to control cycle times and key temperatures throughout the system. Within a burn-off oven there are two main chambers, the afterburner, and the main burner. Each required separate temperature control to provide the oven's specific environment requirements. The afterburner had to be kept at 800°C, the main burner at 370°C [11]. To regulate this temperature, a water jet was also controlled, preventing the workpiece from overheating. To measure the workpiece, an additional thermocouple was incorporated into the system.

A human machine interface (HMI) was designed to allow the operator control over the new control system. The interface enabled the user to select from a pre-programmed range of system parameters, removing operator error as a variable for efficiency loss. A password protected engineer's screen allowed for complete customisation over burn cycles for authorised users. Coupled with built in data collection, this allowed the engineer to finely tune burn cycles by analysing previous processes. A warning and alarm screen was designed, allowing any operator to fault find the system with ease.

In conclusion, the designed system adequately and effectively met the project aims and objectives. A system was designed providing effective control over the burn-off cycle, therefore limiting efficiency losses is rewound motors. The built prototype showcases the effectiveness of the system interface, providing the operator with more control and insight over the cycle than ever before.

Chapter 9 – Recommendations for future work

For the project to be continued further, there are several recommendations. On/off control was chosen for the temperature regulation. If further work were completed, Fuzzy PID control could be implemented as a more accurate and reliable control method. Fuzzy PID would have resulted in less drift from the set temperature, more effectively preventing overheating. This would have been more difficult to implement and may have caused the project to overrun the deadline.

As previously mentioned, the ignition sequence of the project could be improved. Currently once triggered, the ignition electrode remains on. Sensors could be implemented to detect successful ignition, ending the sequence. The ignition is only triggered once, to effectively ignite the gas an ignition pulse may be more effective.

If implemented into a real system, real efficiency testing could be conducted on rewound motors to test the effectiveness of the system.

Chapter 10 – Reflection

Over the course of the project, I have vastly broadened my knowledge. Before embarking on the project, I had never designed a PLC program of this scope. The requirements of the system lead to me designing my own function blocks, something I did not even know was a possibility when I began. At the start of the project, I had not realised the importance of adequate research. Throughout the project I constantly had to add to my literature review as it was lacking in key areas. This rework was not accounted for in my original planning and so was detrimental to my work life balance in the new year. In future projects, I will be stricter with my allocated deadlines, fully completing set tasks before moving onto the next, producing a more fluid, chronological result.

I feel I have learned skills that will help me progress as an engineer. My work with the PLC program and design of the HMI screens has led me to expand my horizons, making me more willing to take on challenges I previously believed too difficult. Throughout the project, my ability to extract relevant information from key sources improved, something I will be able to build on throughout my career.

Overall, the project was extremely beneficial to realising my capabilities. Even though I did not meet my original aim of incorporating my design into the burn-off oven at work, I feel I have produced an acceptable prototype that serves as a reflection of my abilities.

References

[1] Eriks UK, “REPAIR, REPLACE OR UPGRADE,” Eriks UK, 13 04 2025. [Online]. Available: https://eriks.co.uk/en/services-page/repair-and-replace/. [Accessed 13 04 2025].

[2] T. Hall, Interviewee, *Senior Engineer's workshop experience.* [Interview]. 13 04 2025.

[3] R. Rosenberg and A. Hand, Electric Motor Repair, Third Edition ed., S. C. Publishing, Ed., Orlando, Florida: Holt, Rinehart and Winston, 1987.

[4] W. motors, “Basic Parts of a Three Phase (3-Φ) Squirrel Cage Induction Motor,” 05 03 2020. [Online]. Available: https://www.electricalengineeringtoolbox.com/2016/12/basic-parts-of-three-phase-3-squirrel.html. [Accessed 14 03 2020].

[5] WEG, “SPECIFICATION GUIDE,” WEG, 06 2023. [Online]. Available: https://static.weg.net/medias/downloadcenter/ha0/h5f/WEG-motors-specification-of-electric-motors-50039409-brochure-english-web.pdf. [Accessed 23 12 2024].

[6] J. C. Hirzel, “Impact of rewinding on motor efficiency,” IEEE, fort wayne, 1994.

[7] V. Schueler, P. Leistner and J. Douglass, “Industrial motor repair in the united states: Current practice and opportunities for improving customer productivity and energy efficiency,” Bonneville power administration, Olympia, 1995.

[8] S. Nadel, R. N. Elliott, M. Shepard, S. Greenberg, G. Katz and A. T. de Almeida, Energy-Efficient Motor Systems: A handbook on technology, program, and policy opportunities, Washinton, D.C., Washinton, D.C.: American Council for an energy-efficient economy, 2002.

[9] M. Hsanuzzaman, N. A. Rahim, R. Saidur and S. N. Kazi, “Energy savings and emissions reductions for rewinding and replacement of industrial motor,” *Energy,* vol. 36, pp. 233-240, 24 11 2010.

[10] AEMT, EASA, “The effect of repair/rewinding on premium efficiency/IE3 motors,” EASA, St. Louis, 2019.

[11] AEMT, “Good practice guide to maintain motor efficiency,” EASA, Inc., St. Louis, 2021.

[12] IEEE Industry Applications Society, “IEEE Standard for the Repair and Rewinding of AC Electric Motors in the Petroleum, Chemical, and Process Industries,” IEEE, New york, 2015.

[13] S. Swallow, Interviewee, *Meeting with manufacturer.* [Interview]. 18 10 2024.

[14] Pollution control products co., “Burn off oven process,” 22 10 2024. [Online]. Available: https://www.pcpconline.com/burn-off-oven-process.html. [Accessed 22 10 2024].

[14] Pollution control products co., “PCPC burn off oven diagram,” Pollution control products co., 22 10 2024. [Online]. Available: https://www.pcpconline.com/burn-off-oven-diagram.html. [Accessed 22 10 2024].

[15] SNT, “Burn off oven,” SNT, 22 10 2024. [Online]. Available: https://www.thermal-cleaning-system.com/product/burn-off-oven/. [Accessed 22 10 2024].

[16] T. Hall, “Project Proposal,” UWTSD, Swansea, 2024.

[17] D. L. Ransom, “Upgrading Relay Protection?—Be Prepared,” Basler Electric Company, Spokane, 2010.

[18] Pollution Control Products Co., *Ladder wiring diagram for PRC furnaces with J82 burners and UL listed control box,* Dallas, Texas: Pollution Control Products Co., 2003.

[19] Whitelegg, “Burn-off ovens,” Whitelegg, 22 10 2024. [Online]. Available: http://www.whitelegg.com/products/electric-motor/electric-motor-rewind-and-repair/burn-off-ovens. [Accessed 22 10 2024].

[20] Rotary Engineering, “Burn Off Oven,” Rotary Engineering, 22 10 2024. [Online]. Available: https://www.rotary.co.uk/equipment-details/burn-off-oven/. [Accessed 22 10 2024].

[21] Longworth, “Burn-off ovens / Burnout ovens,” Longworth, 22 10 2024. [Online]. Available: https://www.bmlongworth.com/burn-off-ovens/. [Accessed 22 10 2024].

[22] M. Bryan, H. Mills, D. Rewitzer, B. Sedhwick, J. Little and H. Patterson, “Replacing aging relays: Challenges and keys to success,” NetaWorld, 23 02 2024. [Online]. Available: netaworldjournal.org/replacing-aging-relays-challenges-and-keys-to-success/. [Accessed 22 10 2024].

[23] J. N. Kamau, “A Step-By-Step Approach to Retrofit and Automation of PCB Machines Using PLC,” Proceedings of the Sustainable Research and Innovation Conference, Kenya, 2018.

[24] F. Onaifo, A. A. Okandeji, O. Folorunsho, U. E. Essien, A. O. Oyedeji and O. R. Aboade, “Comparison of the reliability of programmable logic controller and electromagnetic relay control in industrial production line,” *Nigerian Journal of Technology,* vol. 38, no. 4, pp. 1030-1035, 4 10 2019.

[25] R. Sykora, “Moving up from hardwired relay logic,” 18 04 2012. [Online]. Available: https://www.controleng.com/articles/moving-up-from-hardwired-relay-logic/. [Accessed 22 10 2024].

[26] R. gamboa, “Relays: Out with the old?,” Omron industrial automation, 10 08 2011. [Online]. Available: controldesign.com/control/plc-pacs/article/11368660/industrial-plcs-relays-out-with-the-old. [Accessed 22 10 2024].

[28] E. R. Alphonsus and M. O. Abdullah, “A review on the applications of programmable logic controllers (PLCs),” *Renewable and Sustainable Energy Reviews,* vol. 60, pp. 1185-1205, 2016.

[29] G. Prashant, “A case study: Idustrial automation using PLC,” *IRE Journals,* vol. 4, no. 4, pp. 52-55, 10 2020.

[30] H. T. H. Thabet, I. S. Jameel and I. A. Hasan, “Rehabilitation of an old traditional elevator based on PLC techniques,” *Wasit Journal of engineering Sciences,* vol. 6, no. 3, pp. 76-89, 08 07 2018.

[31] W. Bolton, Programmable logic controllers, Sixth edition ed., Kidlington, Oxford: Elsevier, 2015.

[32] A. Rullán, “Programmable logic controllers versus personal computers for process control,” *Computers & Industrial Engineering,* vol. 33, no. 1-2, p. 422, 1997.

[33] M. G. Hudedmani, U. R. M, S. K. Kabberalli and R. Hittalamani, “Programmable Logic Controller (PLC) in Automation,” *Advance jounal of Graduate research,* vol. 2, no. 1, pp. 37-45, 07 2017.

[34] T. L. Bartelt, Industrial Electronics, Albany, New York: Delmar, 1997.

[35] L. Miller, “PLC Programming Basics using Ladder Logic,” Learn robotics , 11 03 2020. [Online]. Available: https://www.learnrobotics.org/blog/plc-programming-basics/. [Accessed 14 04 2024].

[36] T. Hall, “APPLIED PROGRAMMABLE LOGIC CONTROLLERS,” UWTSD, Swansea, 2024.

[37] M. M. Hussein, S. Alkhalaf, T. H. Mohamed, D. S. Osheba, M. Ahmed, A. Hemeida and A. M. Hassan, “Modern Temperature Control of Electric Furnace in Industrial Applications Based on Modified Optimization Technique,” *Energies,* vol. 15, no. 8474, 2022.

[38] J. Monsen, “Fundamentals of PID control,” 26 june 2023. [Online]. Available: https://www.isa.org/intech-home/2023/june-2023/features/fundamentals-pid-control. [Accessed 24 03 2025].

[38] X. Chen, “Temperature control in electric furnaces: Methods, applications, and challenges,” *Journal of physics: conference series,* vol. 2649, no. 012032, 2023.

[39] V. G. Ryckaert, J. E. Claes and J. F. Van Impe, “Model-based temperature control in ovens,” *Journal of Food Engineering,* vol. 39, pp. 47-58, 1999.

[40] G. Ulpiani, M. Borgognoni, A. Romagnoli and C. Di Perna, “Comparing the performance of on/off, PID and fuzzy controllersapplied to the heating system of an energy-efficient building,” *Energy and Buildings,* vol. 116, pp. 1-17, 2016.

[41] J. Smuts, “PID Controllers Explained,” Canadian Process Equipment & Control News, Houston, 2002.

[42] M. E. A/Alla and W. I. M. Taha, “PID and Fuzzy Logic in Temperature Control System,” in *INTERNATIONAL CONFERENCE ON COMPUTING, ELECTRICAL AND ELECTRONIC ENGINEERING*, Elkhoms,, 2013.

[43] M. Coban and M. Fidan, “Fuzzy Logic Based Temperature Control,” IEEE, Baysal, 2019.

[44] P. Singhala, D. N. Shah and B. Patel, “Temperature Control using Fuzzy Logic,” *International Journal of Instrumentation and Control Systems,* vol. 4, no. 1, 2014.

[45] S. Dequan, G. Guili , G. Zhiwei and X. Peng, “Application of Expert Fuzzy PID Method for Temperature Control of Heating Furnace,” *Procedia Engineering,* vol. 29, pp. 257-261, 2012.

[46] T. Urica, P. Sojka, D. Koniar and A. S. L. Hargas, “The control process of an on-off controller,” in *20th International Scientific Conference on Electric Power Engineering (EPE)*, Kouty nad Desnou, 2019.

[47] M. Wcislik and M. S. Laskawski, “Correction of the on-off control system using PLC,” in *18th International Scientific Conference on Electric Power Engineering (EPE)*, Kouty nad Desnou, 2017.

[48] U. S. Senarath, “Waterfall Methodology, Prototyping and Agile Development,” Research gate, 2021.

[49] RS, “Siemens SIMATIC S7-1200 Series PLC CPU for Use with SIMATIC S7-1200 Series, Digital, Transistor Output, 14 (Digital, 2,” RS, 03 01 2025. [Online]. Available: https://uk.rs-online.com/web/p/plcs-programmable-logic-controllers/8624471?gb=s. [Accessed 03 01 2025].

[50] RS, “Omron CP1L Series PLC CPU for Use with SYSMAC CP1L Series, Relay Output, 18 (DC)-Input, DC Input,” RS, 03 01 2025. [Online]. Available: https://uk.rs-online.com/web/p/plcs-programmable-logic-controllers/0401573?gb=s. [Accessed 03 01 2025].

[51] RS, “Allen Bradley Micro870 Series PLC CPU, 24V Source Output, 14-Input, Voltage Input,” RS, 03 01 2025. [Online]. Available: https://uk.rs-online.com/web/p/plcs-programmable-logic-controllers/1833562?gb=s. [Accessed 03 01 2025].

[52] RS, “Mitsubishi FX5U Series PLC CPU for Use with MELSEC IQ-F Series IQ Platform-Compatible PLC, Relay, Transistor Output,,” RS, 03 01 2025. [Online]. Available: https://uk.rs-online.com/web/p/plcs-programmable-logic-controllers/8755672?gb=s. [Accessed 03 01 2025].

[53] Frequent-Penalty247, “PLC,” 2022. [Online]. Available: https://www.reddit.com/r/PLC/comments/xa7xvo/what_do_you_guys_like_and_dislike_about_micro/. [Accessed 03 01 2025].

[54] Siemens, “6ES7214-1AG40-0XB0,” Siemens, 2025. [Online]. Available: https://support.industry.siemens.com/cs/pd/255094?pdti=pi&dl=en&lc=en-GB. [Accessed 03 01 2025].

[55] Pollution Control Products co., “External Parts of Burn Off Ovens,” Pollution Control Products co., 22 12 2024. [Online]. Available: https://www.pcpconline.com/external-parts.html. [Accessed 22 12 2024].

[56] P. Horowitz and W. Hill, The art of electronics, 3rd ed., New york, New York: Cambridge university press, 2016.

[57] B. C. Patel, G. R. Sinha and N. Goel, “Advances in modern sensors,” IOP Publishing Ltd, 2020.

[58] TC Ltd., “Thermocouple Types,” TC Ltd., 22 12 2024. [Online]. Available: https://www.tc.co.uk/thermocouple-information/thermocouple-types.html. [Accessed 22 12 2024].

[59] Omega, “Types of RTDs,” Omega, 22 12 2024. [Online]. Available: https://www.omega.com/en-us/resources/rtd-types. [Accessed 22 12 2024].

[60] E. A. Parr, Industrial Control Handbook, 3 ed., Oxford: Newnes, 1999.

[61] RS, “RS PRO Type K Mineral Insulated Thermocouple 300mm Length, 6mm Diameter → +1100°C,” RS, 22 12 2024. [Online]. Available: https://uk.rs-online.com/web/p/thermocouples/7877829?gb=s. [Accessed 22 12 2024].

[62] RS, “Heraeus PT100 RTD Sensor, 2mm Dia, 4mm Long, Class B +850°C Max,” RS, 22 12 2024. [Online]. Available: https://uk.rs-online.com/web/p/rtd-sensors/6933978?gb=s. [Accessed 22 12 2024].

[64] J. Fraden, Handbook of modern sensors: physics, design, and applications, New york: Springer, 2004.

[65] J. Shieh, J. E. Huber, N. A. Fleck and M. F. Ashby, “The selection of sensors,” *Progress in material Science,* vol. 46, pp. 461-504, 2001.

[66] RS, “RS PRO Type K Thermocouple Cable/Wire, 25m, Unscreened, PVC Insulation, +105°C Max, 7/0.2mm,” RS, 24 12 2024. [Online]. Available: https://uk.rs-online.com/web/p/thermocouple-extension-wire/8140018. [Accessed 24 12 2024].

[67] RS, “RS PRO Type J Thermocouple 300mm Length, 2mm Diameter → +400°C,” RS, 24 12 2024. [Online]. Available: https://uk.rs-online.com/web/p/thermocouples/3242500?gb=s. [Accessed 24 12 2024].

[68] RS, “RS PRO Type J Heavy Duty Thermocouple 150mm Length, 4.5mm Diameter → +350°C,” RS, 24 12 2024. [Online]. Available: https://uk.rs-online.com/web/p/thermocouples/2522424?gb=s. [Accessed 24 12 2024].

[69] G. B. Liptak, Instrument engineers' Handbook, Boca Raton: CRC Press, 2003, pp. 964-972.

[70] A. S. Morris and R. Langari, Measurement and instrumentation, 1st ed., Waltham, Massachusetts: Academic press (Elsevier), 2012.

[71] T. Mortenson, “Limit Switch Explained | Working Principles,” RealPars, 19 10 2020. [Online]. Available: https://www.realpars.com/blog/limit-switch. [Accessed 03 01 2025].

[72] Instrumentation Tools, “Switch Types,” Instrumentation tools, 03 01 2025. [Online]. Available: https://instrumentationtools.com/topic/switch-types/. [Accessed 03 01 2025].

[73] RS, “Bernstein AG I49 Series Roller Plunger Limit Switch, NO/NC, IP67, SPST, Plastic Housing,” RS, 03 01 2025. [Online]. Available: https://uk.rs-online.com/web/p/limit-switches/1363203. [Accessed 03 01 2025].

[74] Bernstein, “Plastic bodied limit switch,” Porta Westfalica, 2016.

[74] RS, “Allen Bradley 440K Safety Interlock Switch, 2NC/1NO, Keyed Actuator Included, Glass Filled PBT,” RS, 03 01 2025. [Online]. Available: https://uk.rs-online.com/web/p/safety-interlock-switches/0178181. [Accessed 03 01 2025].

[76] RS, “A Complete Guide to Pressure Sensors,” RS, 29 08 2023. [Online]. Available: https://uk.rs-online.com/web/content/discovery/ideas-and-advice/pressure-sensors-guide. [Accessed 03 01 2025].

[77] Ofwat, “The guaranteed standards scheme (GSS): summary of standards and conditions,” Ofwat, 2017.

[78] Arrow industrial equipment, “Pollution Control Products,” 12 01 2025. [Online]. Available: https://www.arrowindustrial.net/assets/files/PCP_Controlled_Pyrolysis_Furnaces.pdf?r=false.

[79] RS, “Gems Sensors 3100 Series Pressure Sensor, 0bar Min, 10bar Max, Analogue Output, Relative Reading,” RS, 03 01 2025. [Online]. Available: https://uk.rs-online.com/web/p/pressure-sensors/1365040?gb=s. [Accessed 03 01 2025].

[80] RS, “WIKA A-10 Series Pressure Sensor, 0bar Min, 10bar Max, Analogue Output,” 03 01 2025. [Online]. Available: https://uk.rs-online.com/web/p/pressure-sensors/1241468?gb=s. [Accessed 03 01 2025].

[81] “Pollution control products co,” 12 02 2025. [Online]. Available: https://www.pcpconline.com/inertgas-ovens-specs.html. [Accessed 12 02 2025].

[82] RS, “WIKA A-10 Series Pressure Sensor, 0bar Min, 1bar Max, Analogue Output,” RS, 03 01 2025. [Online]. Available: https://uk.rs-online.com/web/p/pressure-sensors/1241484?gb=s. [Accessed 03 01 2025].

[83] K. Guo, “11 Flow Meter Types and Their Advantages and Disadvantages,” Sino-Inst, 18 12 2023. [Online]. Available: https://sino-inst.com/11-flow-meter-types-advantages-disadvantages/#working-principle-hd-6780f2f3c2b1e. [Accessed 03 01 2025].

[84] Waltero, “9 Types of Flow Meter: Uses, Pros, Cons, Installation, Integration,” Waltero, 03 01 2025. [Online]. Available: https://waltero.com/water/types-of-flow-meter/. [Accessed 03 01 2025].

[85] Omega, “Types of Flow Meters for Different Applications,” Omega, 03 01 2025. [Online]. Available: https://www.omega.com/en-us/resources/flow-meter-types. [Accessed 03 01 2025].

[8 RS, “The Complete Guide to Flow Switches,” RS, 04 09 2023. [Online]. Available: https://uk.rs-online.com/web/content/discovery/ideas-and-advice/flow-switches-guide. [Accessed 03 01 2025].

[86] Siemens, “S7-1200 proggrammable controller System manual,” NÜRNBERG, 2024.

[87] Kempston Controls, “Siemens - 6EP1332-1SH71 SIMATIC S7-1200 POWER MODULE PM1207,” Kempston Controls, 14 12 2024. [Online]. Available: https://www.kempstoncontrols.co.uk/6EP1332-1SH71/Siemens/sku/72548. [Accessed 14 12 2024].

[88] Siemens, “Data sheet 6EP1332-1SH71,” 24 12 2024. [Online]. Available: file:///C:/Users/tomos/Downloads/6EP13321SH71_datasheet_en.pdf. [Accessed 24 12 2024].

[89] RealPars, “How to Wire a Thermocouple to a PLC,” RealPars, 28 02 2022. [Online]. Available: https://www.youtube.com/watch?v=ZG574Ss56HA. [Accessed 03 01 2025].

[90] RS, “Siemens SM 1231 Series PLC I/O Module for Use with CPU 1211, CPU 1212, CPU 1214, Analogue,” RS, 03 01 2025. [Online]. Available: https://uk.rs-online.com/web/p/plc-accessories/8104150?searchId=9bea3f43-53e0-4299-a8f9-f99d9f44028e&gb=s. [Accessed 03 01 2025].

[91] RS components, “Siemens SIMATIC Series KTP700 Basic HMI Panel - 7 in, TFT Display, 800 x 480,” RS, 28 03 2025. [Online]. Available: https://uk.rs-online.com/web/p/hmi-displays/8643961?gb=s. [Accessed 28 03 2025].

[92] Siemens, “Data sheet 6AV2123-2GB03-0AX0,” 15 09 2024. [Online]. Available: https://docs.rs-online.com/7df4/0900766b813a9d2b.pdf. [Accessed 28 03 2025].

[93] RS, “Allen Bradley 2711P Series Touch Screen HMI - 12.1 in, LCD, TFT Display, 1280 x 800,” 28 03 2025. [Online]. Available: https://uk.rs-online.com/web/p/hmi-displays/2649423?gb=s. [Accessed 28 03 2025].

[94] Allen Bradley, “PanelView Plus 7 Performance Terminals,” 01 02 2022. [Online]. Available: https://docs.rs-online.com/5416/A700000009600965.pdf. [Accessed 28 03 2025].

[95] RS, “Schneider Electric GTO Series Harmony GTO Touch Screen HMI - 5.7 in, TFT Display, 320 x 240,” RS, 28 03 2025. [Online]. Available: https://uk.rs-online.com/web/p/hmi-displays/7815887?gb=s. [Accessed 28 03 2025].

[96] Scheider, “Product data sheet HMIGTO2310,” Scheider, 27 07 2023. [Online]. Available: https://docs.rs-online.com/1e2d/A700000010811416.pdf. [Accessed 28 03 2025].

[97] Siemens, “6ES7231-4HD32-0XB0,” Siemens, 28 03 2025. [Online]. Available: https://mall.industry.siemens.com/mall/en/WW/Catalog/Product/6ES7231-4HD32-0XB0. [Accessed 28 03 2025].

[98] Amazon, “Othmro Red Energy Saving LED Indicator Light 22mm Panel Mount 24V Flush Panel Mount 10Pcs,” Othmro, 02 03 2025. [Online]. Available: https://www.amazon.co.uk/dp/B07Y9Z3DNH?ref=ppx_yo2ov_dt_b_fed_asin_title&th=1. [Accessed 02 03 2025].

[100] Amazon, “DAOKAI 22mm Momentary Push Button Switch 24V,” 02 03 2025. [Online]. Available: https://www.amazon.co.uk/dp/B0CR46FF4X?ref=ppx_yo2ov_dt_b_fed_asin_title&th=1. [Accessed 02 03 2025].

[101] Switch electronics, “YW1L-V4E02Q4R 24V illuminated 22mm Emergency Stop Switch 2NC IDEC,” Switch electronics, 02 03 2025. [Online]. Available: https://www.switchelectronics.co.uk/products/idec-24v-illuminated-22mm-emergency-stop-switch-2nc-yw1l-v4e02q4r?variant=45454505247029&utm_medium=cpc&utm_source=bing&utm_campaign=Bing%20Shopping&msclkid=f9a9849e0dfe14587bede3552e659e23. [Accessed 02 03 2025].

[102] Amazon, “ABB IP65 Junction Box • Fully Dust Sealed Enclosure • Waterproof Electric Cable Connector Unit • Shockproof Adaptable Indoor/Outdoor Box • 153 x 110 x 66mm (Pack of 2),” Amazon, 27 02 2025. [Online]. Available: https://www.amazon.co.uk/dp/B0D1CJSVL2?ref=ppx_yo2ov_dt_b_fed_asin_title&th=1. [Accessed 27 02 2025].

[103] Amazon, “15 Pcs AC 6A/250V 10A/125V 2 Solder Lug SPST On/Off Mini Boat Rocker Switch Car Auto Boat Round Rocker 2 Pin Toggle SPST Switch Snap,” Amazon, 27 02 2025. [Online]. Available: https://www.amazon.co.uk/dp/B01N2U8PK0?ref=ppx_yo2ov_dt_b_fed_asin_title. [Accessed 27 02 2025].

[104] Amazon, “Taiss/10pcs 10K Ohm 3 Terminals Linear Taper Rotary Audio B Type Potentiometer, Volume Control Potentiometer B10K + 10pcs Knob (Black and gold each 5,” Amazon, 27 02 2025. [Online]. Available: https://www.amazon.co.uk/dp/B07HBRC7LR?ref=ppx_yo2ov_dt_b_fed_asin_title&th=1. [Accessed 27 02 2025].

[105] Amazon, “4 Pcs Din Rail, Din Mounting Rail, 35 mm Wide, 7.5 mm High, 200 mm Long, Comes with Screws, Suitable for Switchboard Installation and Contactors in Control Cabinets,” Amazon, 27 02 2025. [Online]. Available: https://www.amazon.co.uk/dp/B0DFXQQYYM?ref=ppx_yo2ov_dt_b_fed_asin_title. [Accessed 27 02 2025].

[106] joe0898, “Siemens Simatic S7-1200 SM1231 AI (analogue input),” Ebay, 27 02 2025. [Online]. Available: https://www.ebay.co.uk/itm/354252358943?_trkparms=amclksrc%3DITM%26aid%3D1110006%26algo%3DHOMESPLICE.SIM%26ao%3D1%26asc%3D284136%26meid%3Deb70275843614b71991290c7893fb1a0%26pid%3D101875%26rk%3D1%26rkt%3D6%26sd%3D226586427774%26itm%3D354252358943%26pmt%3D1. [Accessed 27 02 2025].

[107] Real Games, “Factory I/O,” Real Games, 02 03 2025. [Online]. Available: https://factoryio.com/siemens-edition. [Accessed 02 03 2025].

[108] Siemens, “TIA Portal STEP 7 Basic V10.5,” 12 2009. [Online]. Available: https://cache.industry.siemens.com/dl/files/542/40263542/att_829827/v1/GS_STEP7Bas105enUS.pdf. [Accessed 18 04 2025].

[109] Engineers edge, “Metal melting temperatures of common engineering materials,” Engineers edge, 14 04 2025. [Online]. Available: https://www.engineersedge.com/materials/metal_melting_temperatures_13214.htm. [Accessed 14 04 2025].

[110] ST Microelectronics, “LM217, LM317 Datasheet,” 22 12 2021. [Online]. Available: https://www.farnell.com/datasheets/3758551.pdf. [Accessed 20 02 2025].

[111] M. Burns, Interviewee, *Feedback on control method and interface.* [Interview]. 20 04 2025.

[112] T. Dean, Interviewee, *Feedback on control method and interface.* [Interview]. 20 04 2025.

Appendix 1 – Gantt chart

Upgrade of Burn-off oven control system

ERIKS
TOMOS HALL 2219188

Project Start: 10/10/24
Display Week: 1

TASK	ASSIGNED TO	PROGRESS	START	END	DAYS
Phase 1 Ideas					
Determine project idea	TH	100%	10/10/24	11/10/24	2
Research similar projects	TH	100%	11/10/24	21/10/24	11
Analyse existing control system	TH	100%	11/10/24	15/10/24	5
Identify disadvantages	TH	100%	15/10/24	16/10/24	2
Propose PLC upgrade	TH	100%	16/10/24	16/10/24	1
Phase 2 Proposal					
Complete project proposal	TH	100%	10/10/24	28/10/24	19
Research operational requirments	TH	100%	28/10/24	2/11/24	6
Outline inputs and outputs of the system	TH	100%	2/11/24	5/11/24	4
Phase 3 Development					
Select PLC	TH	100%	5/11/24	5/12/24	31
Select Components	TH	100%	5/12/24	4/1/25	31
Write up report so far	TH	100%	4/1/25	13/1/25	10
Interim Viva	TH	100%	14/1/25	16/1/25	2
Phase 4 Prototyping					
Begin programming	TH	100%	16/1/25	15/2/25	31
Simulate using factory IO	TH	100%	15/2/25	22/2/25	8
Test operation	TH	100%	22/2/25	23/2/25	2
Build prototype	TH	100%	23/2/25	3/3/25	9
Test prototype	TH	100%	3/3/25	4/3/25	2
Fault find/ alterations	TH	100%	4/3/25	11/3/25	8
Complete final report	TH	100%	11/3/25	21/4/25	42
Final Viva	TH		21/4/25	8/5/25	18
Produce exhibition poster	TH		8/5/25	11/5/25	4

Figure 94 - Final Gantt chart task list

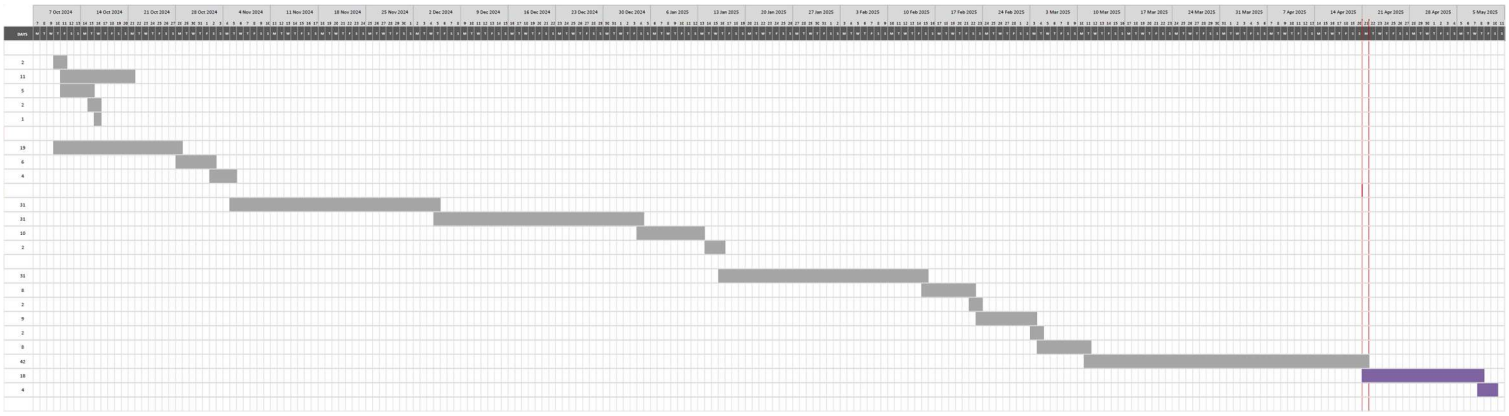

Figure 95 - Final Gantt chart progression

Upgrade of Burn-off oven control system

ERIKS
TOMOS HALL 2219188

Project Start: 10/10/24
Display Week: 1

TASK	ASSIGNED TO	PROGRESS	START	END	DAYS
Phase 1 Ideas					
Determine project idea	TH	100%	10/10/24	11/10/24	2
Research similar projects	TH	100%	11/10/24	21/10/24	11
Analyse existing control system	TH	100%	11/10/24	15/10/24	5
Identify disadvantages	TH	100%	15/10/24	16/10/24	2
Propose PLC upgrade	TH	100%	16/10/24	16/10/24	1
Phase 2 Proposal					
Complete project proposal	TH	100%	10/10/24	28/10/24	19
Research operational requirments	TH	50%	28/10/24	2/11/24	6
Outline inputs and outputs of the system	TH	0%	2/11/24	5/11/24	4
Select PLC	TH	0%	5/11/24	7/11/24	3
Select sensors and additional equipment	TH	0%	7/11/24	10/11/24	4
Phase 3 Software					
Begin programming	TH	0%	10/11/24	9/1/25	61
Simulate operation using factory IO	TH	0%	10/1/25	14/1/25	5
Test operation	TH	0%	14/1/25	15/1/25	2
Interim Viva	TH	0%	16/1/25	17/1/25	2
Order required components	TH	0%	15/1/25	19/1/25	5
Phase 4 Building					
Build new control panel	TH		20/1/25	27/1/25	8
Remove old relay control	TH		27/1/25	29/1/25	3
Install new panel	TH		29/1/25	31/1/25	3
Test operation	TH		31/1/25	1/2/25	2
Complete Final report	TH		28/10/24	29/4/25	184
Final Viva	TH		6/5/25	6/5/25	1
Produce exhibition poster	TH		29/4/25	9/5/25	11
Exhibition questionnaire	TH		6/5/25	9/5/25	4

Figure 96 - Original proposal Gantt chart task list

Appendix 2 – Full ladder program

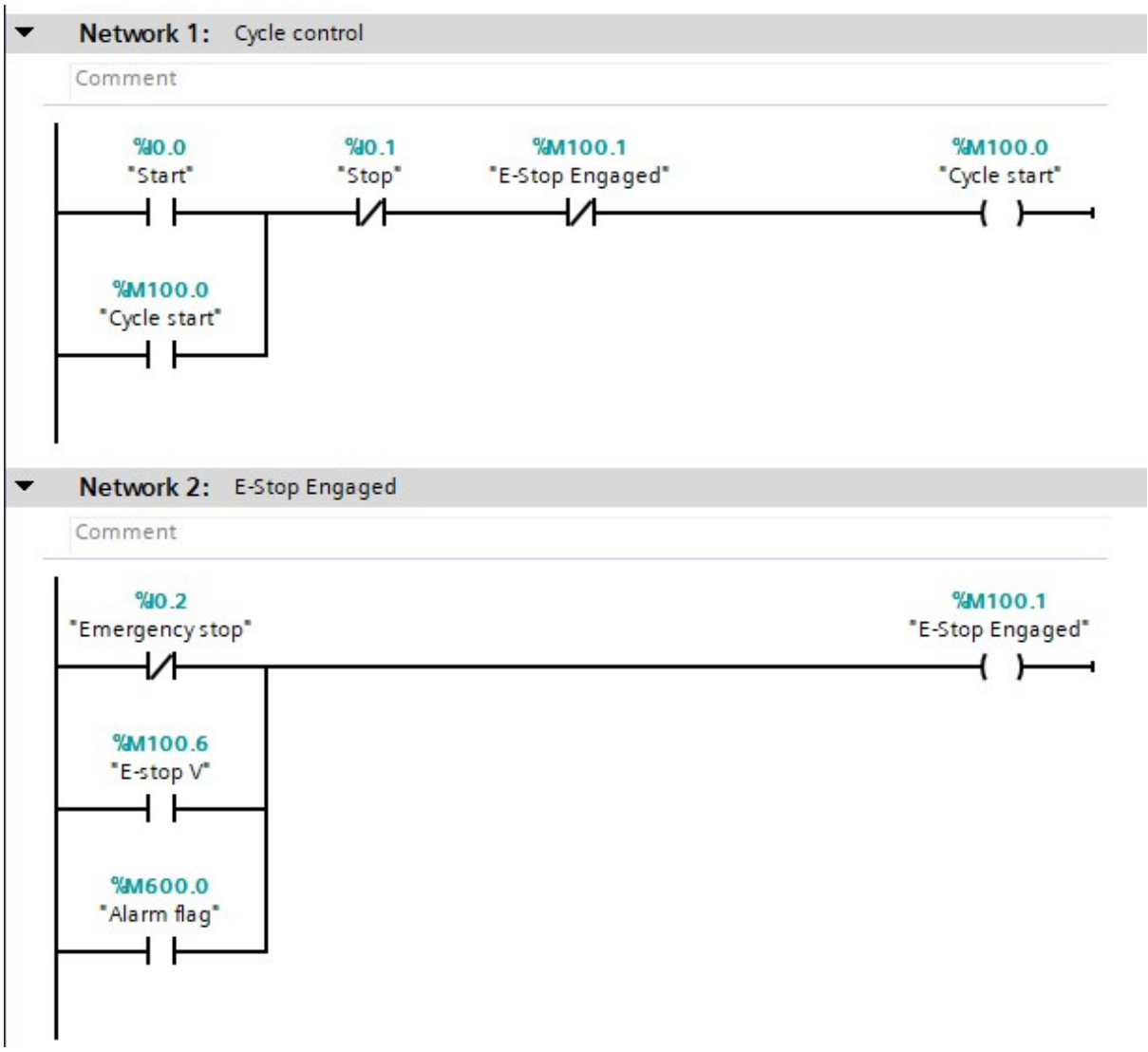

Figure 97 - Network 1 and 2, start and emergency stop functions

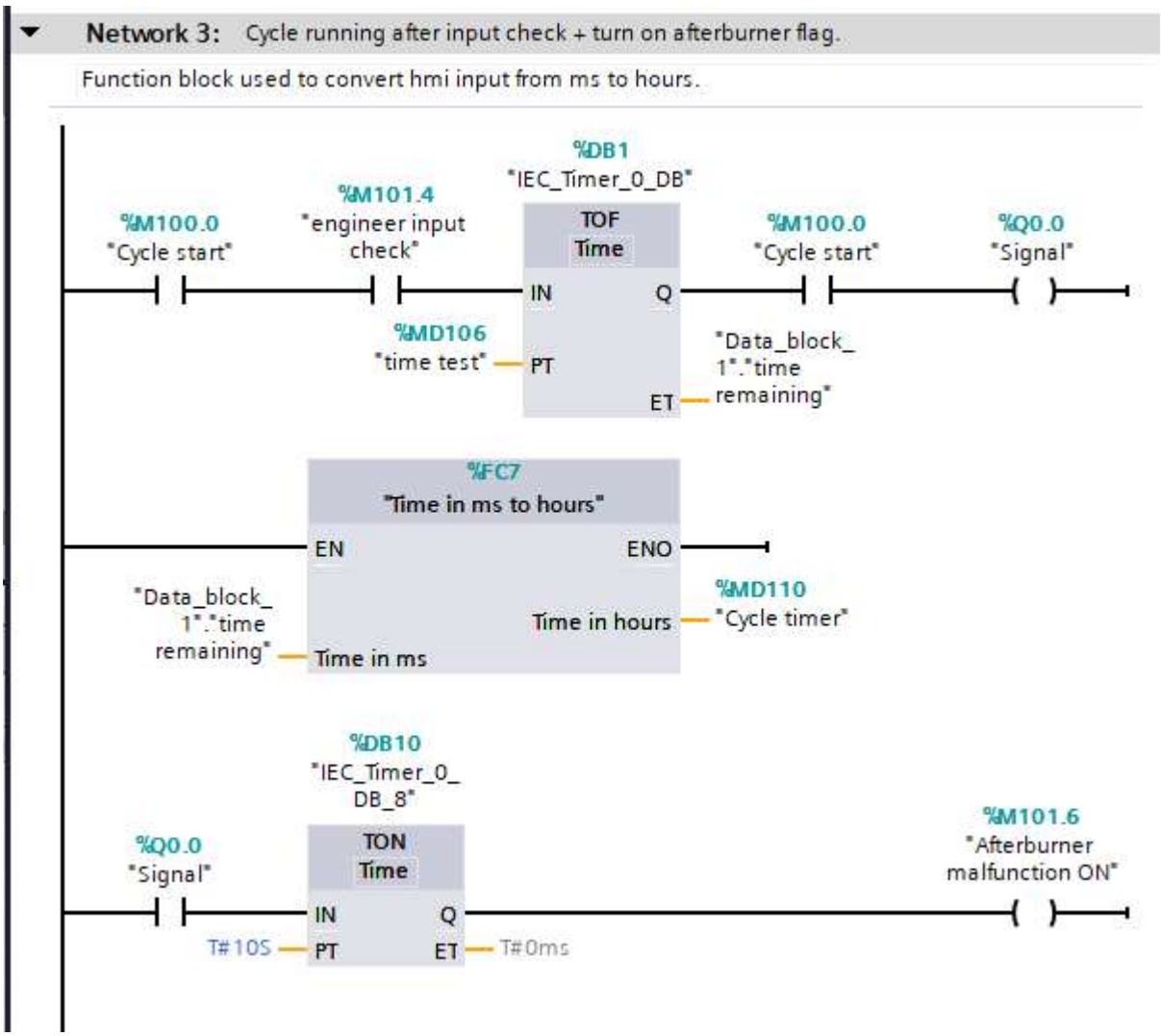

Figure 98 - Network 3, cycle checks for signal

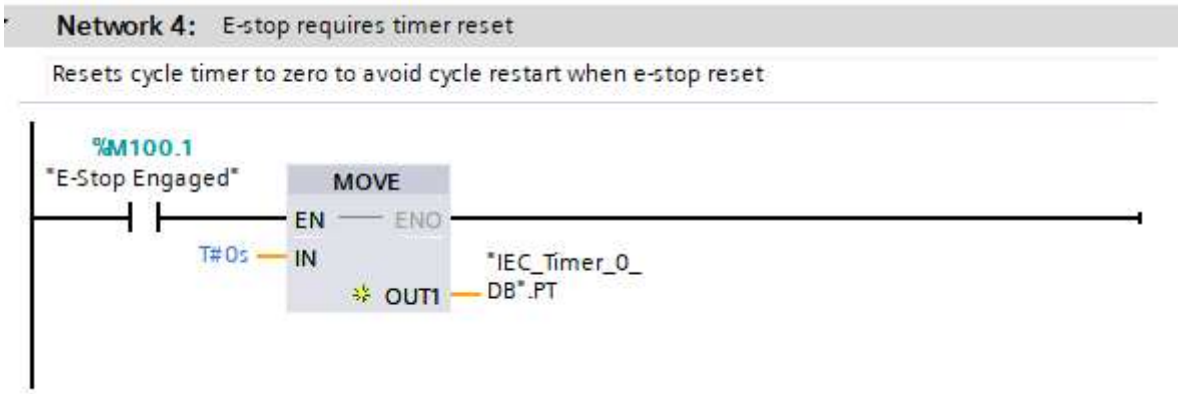

Figure 99 - Emergency stop reset

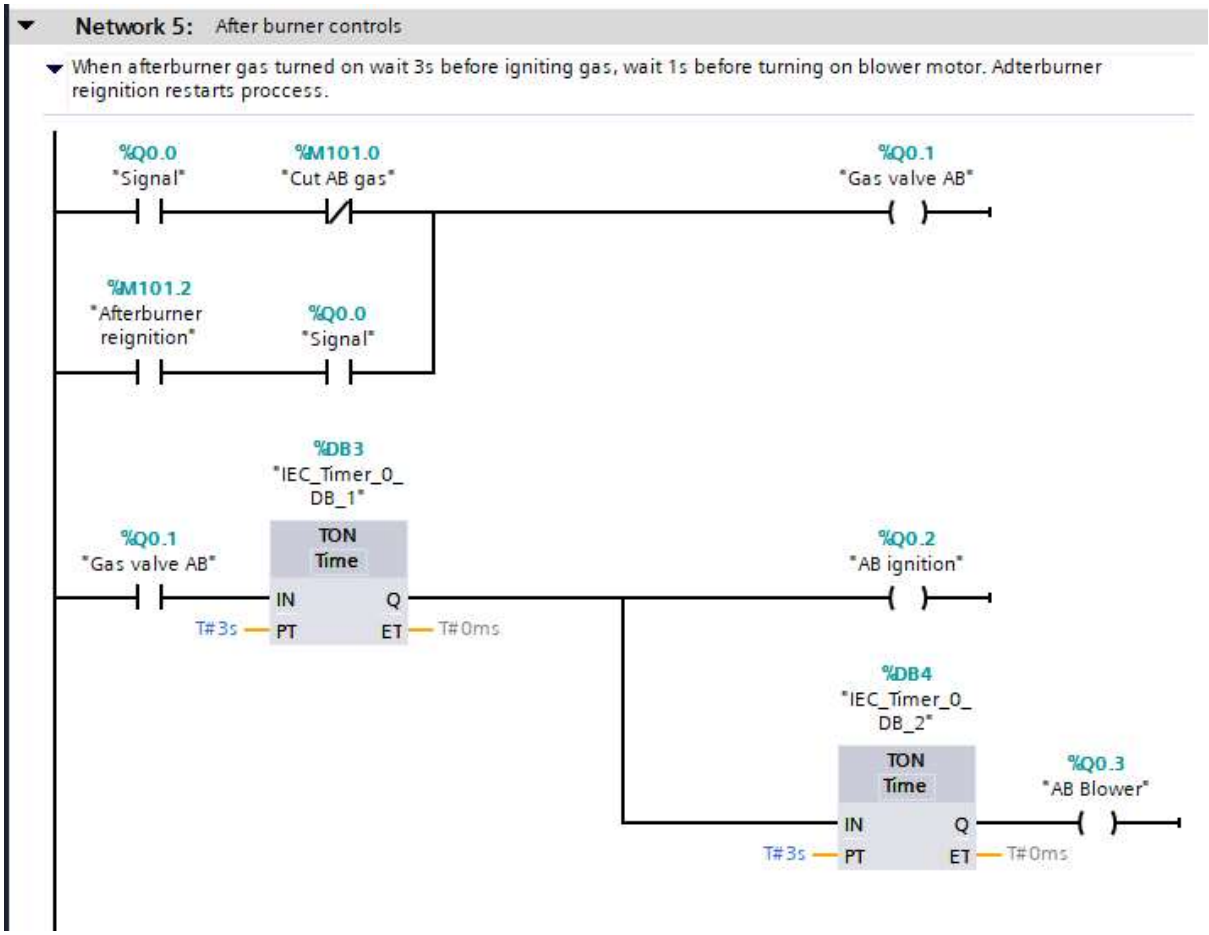

Figure 100 - Network 5 Afterburner controls

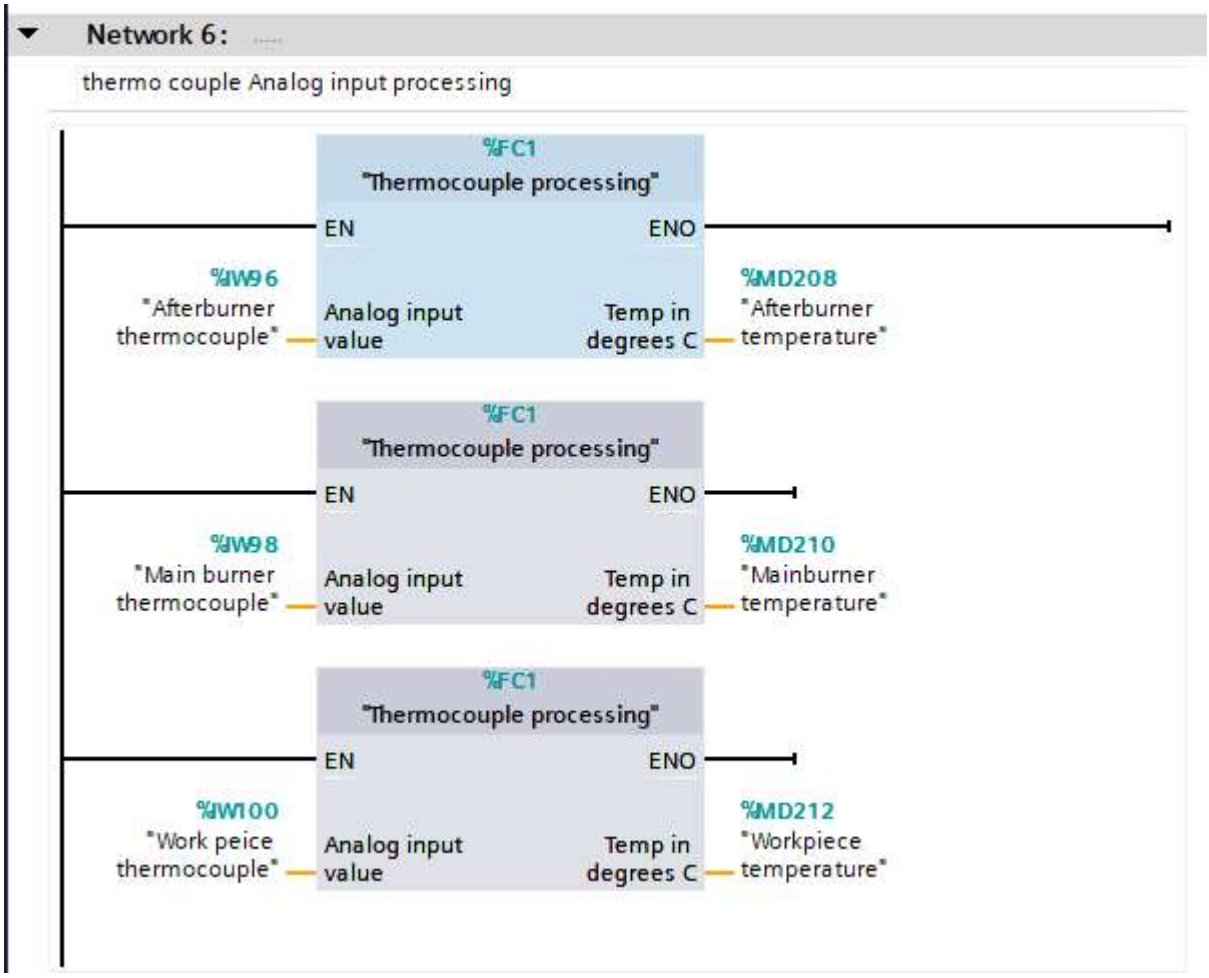

Figure 101 - Network 6, analogue input processing

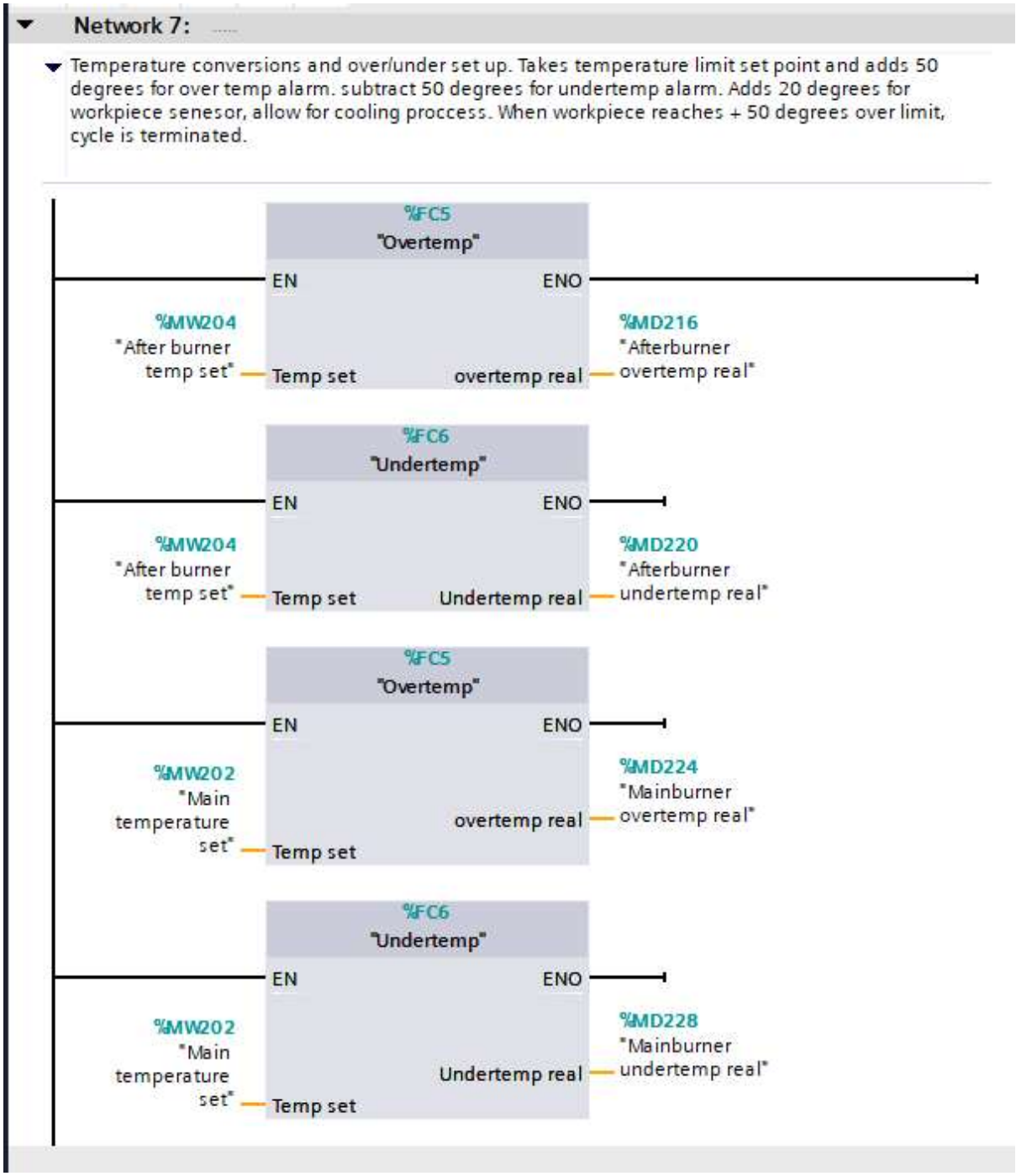

Figure 102 - Network 7, temperature limit setting

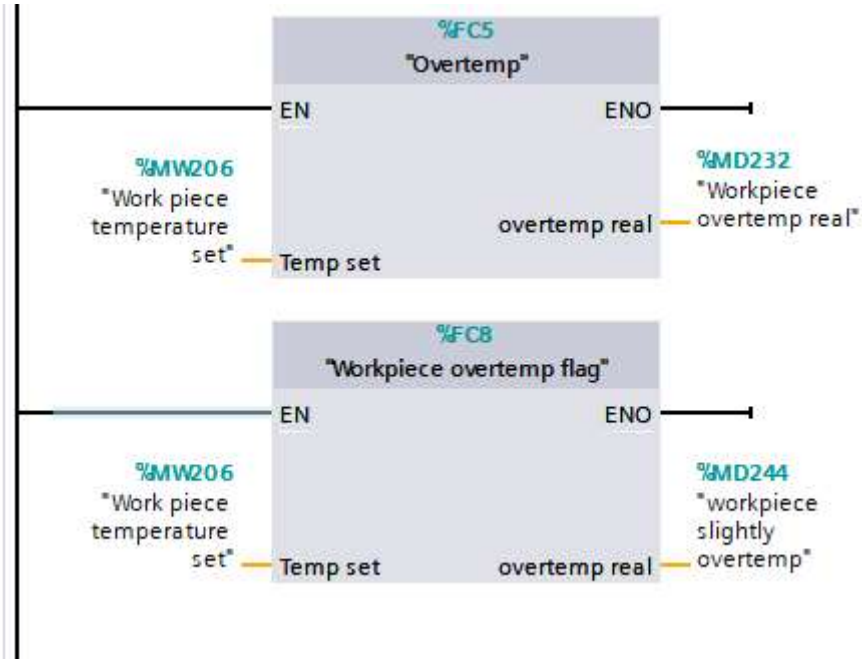

Figure 103 - Network 7 continued

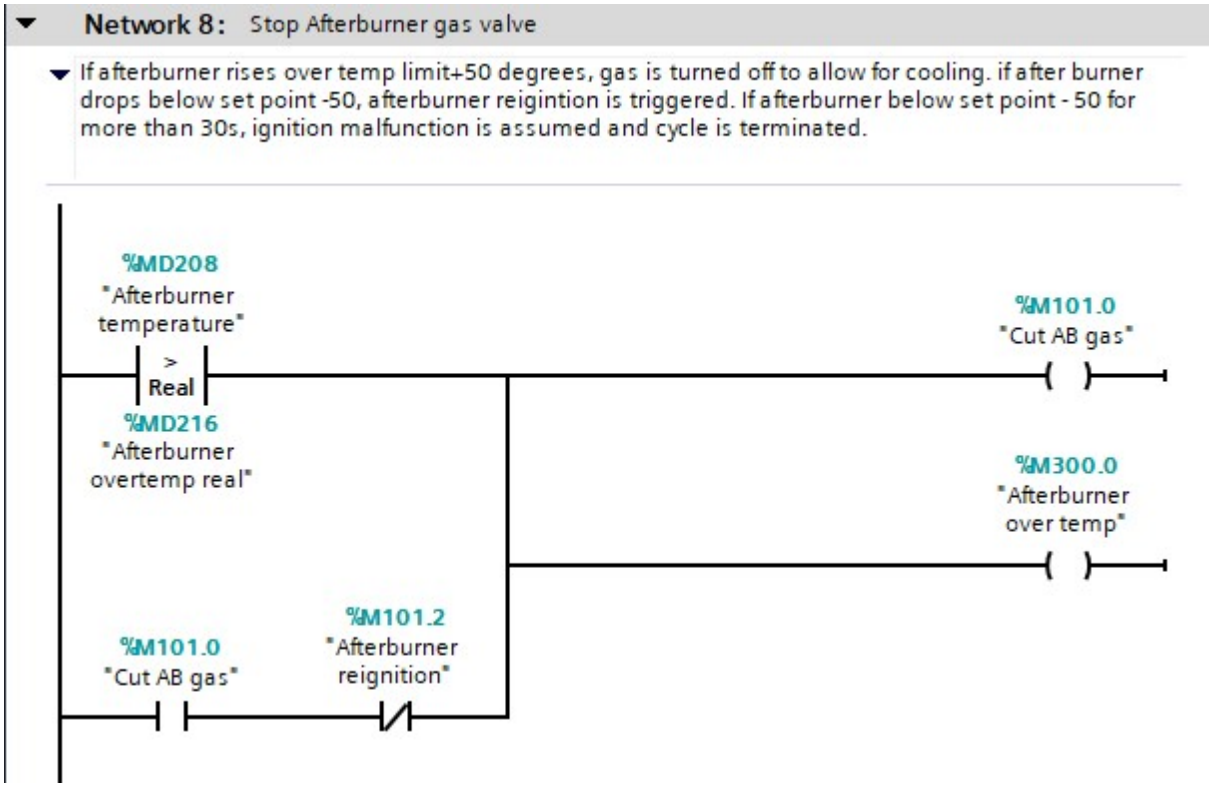

Figure 104 - Network 8 Afterburner stop

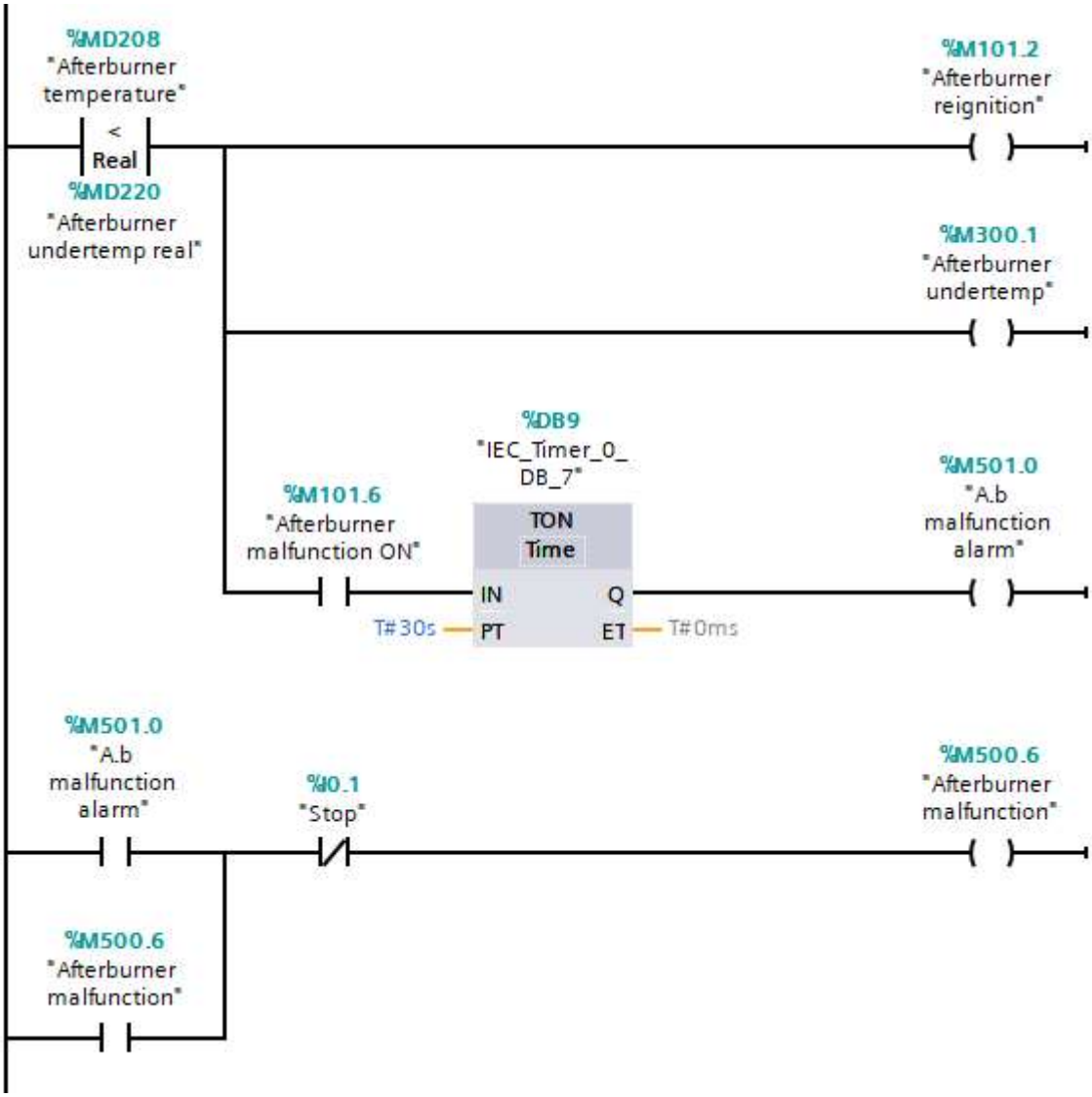

Figure 105 - Network 8 continued

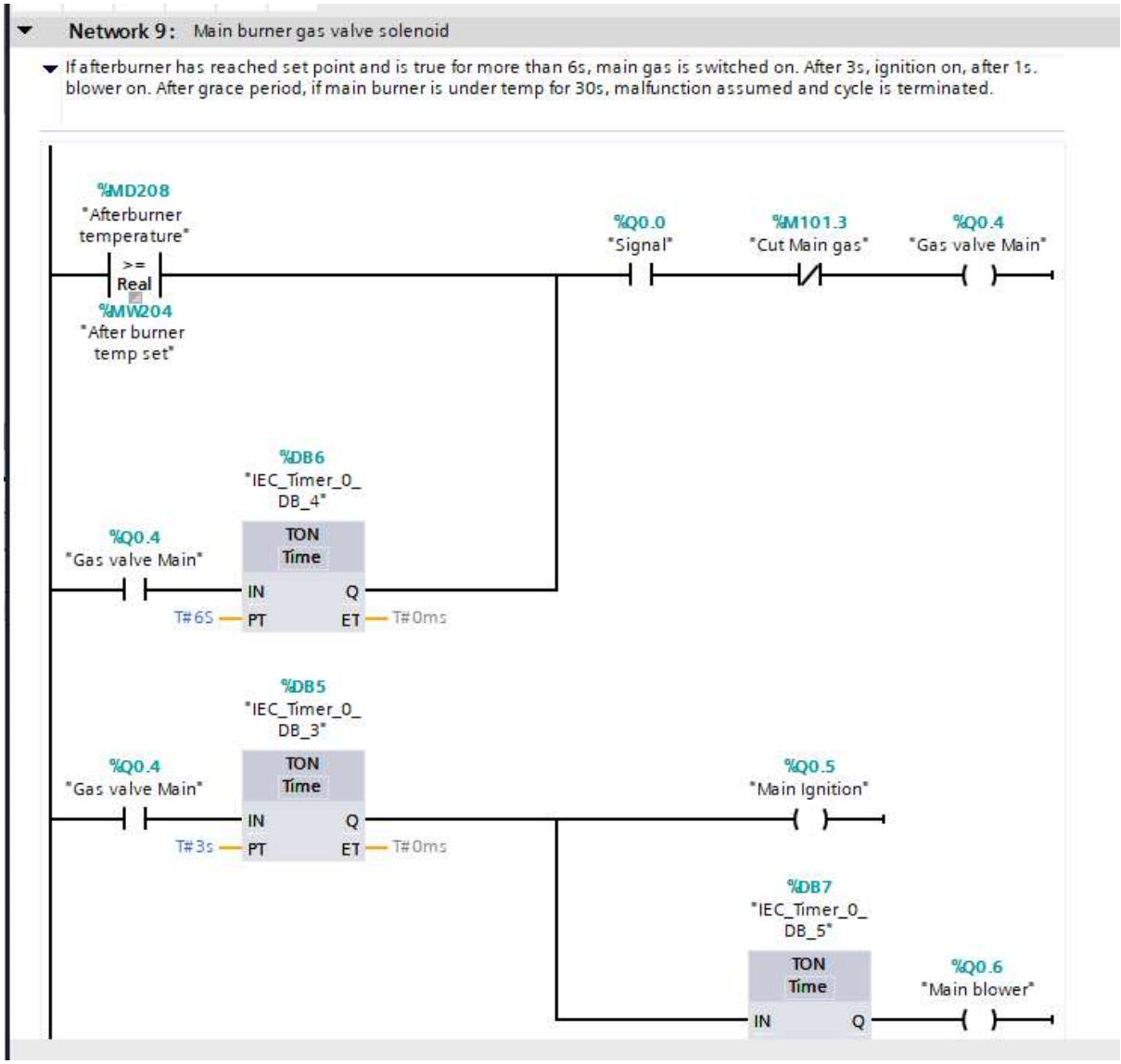

Figure 106 - Network 9

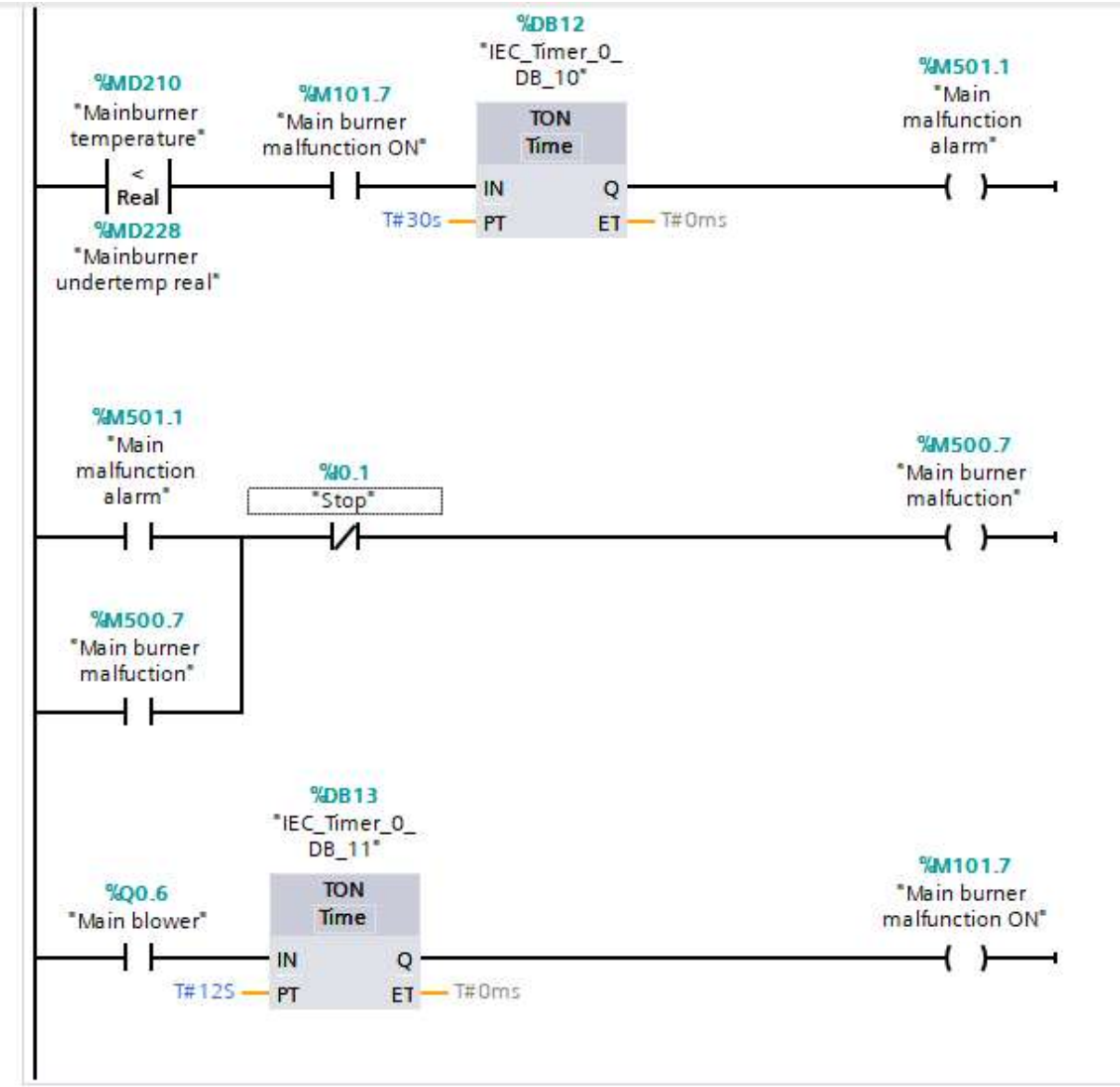

Figure 107 - Network 9 continued

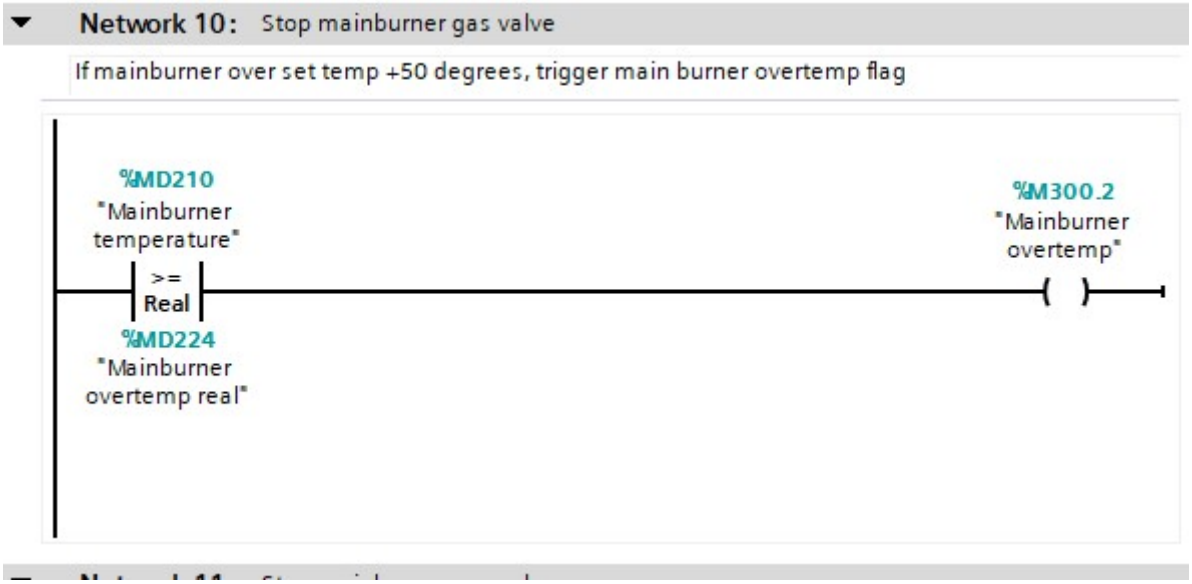

Figure 108 - Network 10, Main burner overtemperature

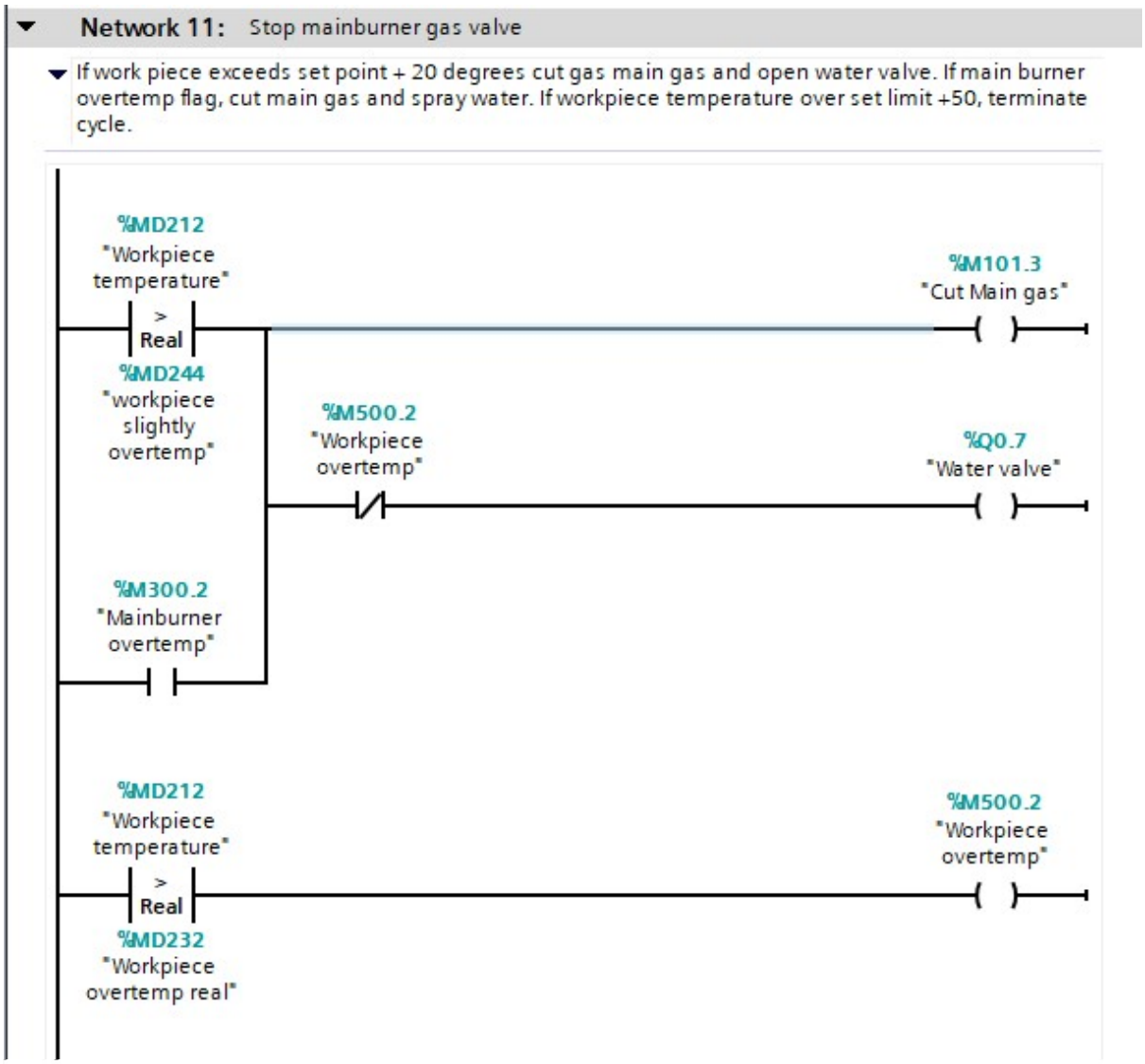

Figure 109 - Network 11, main burner regulator

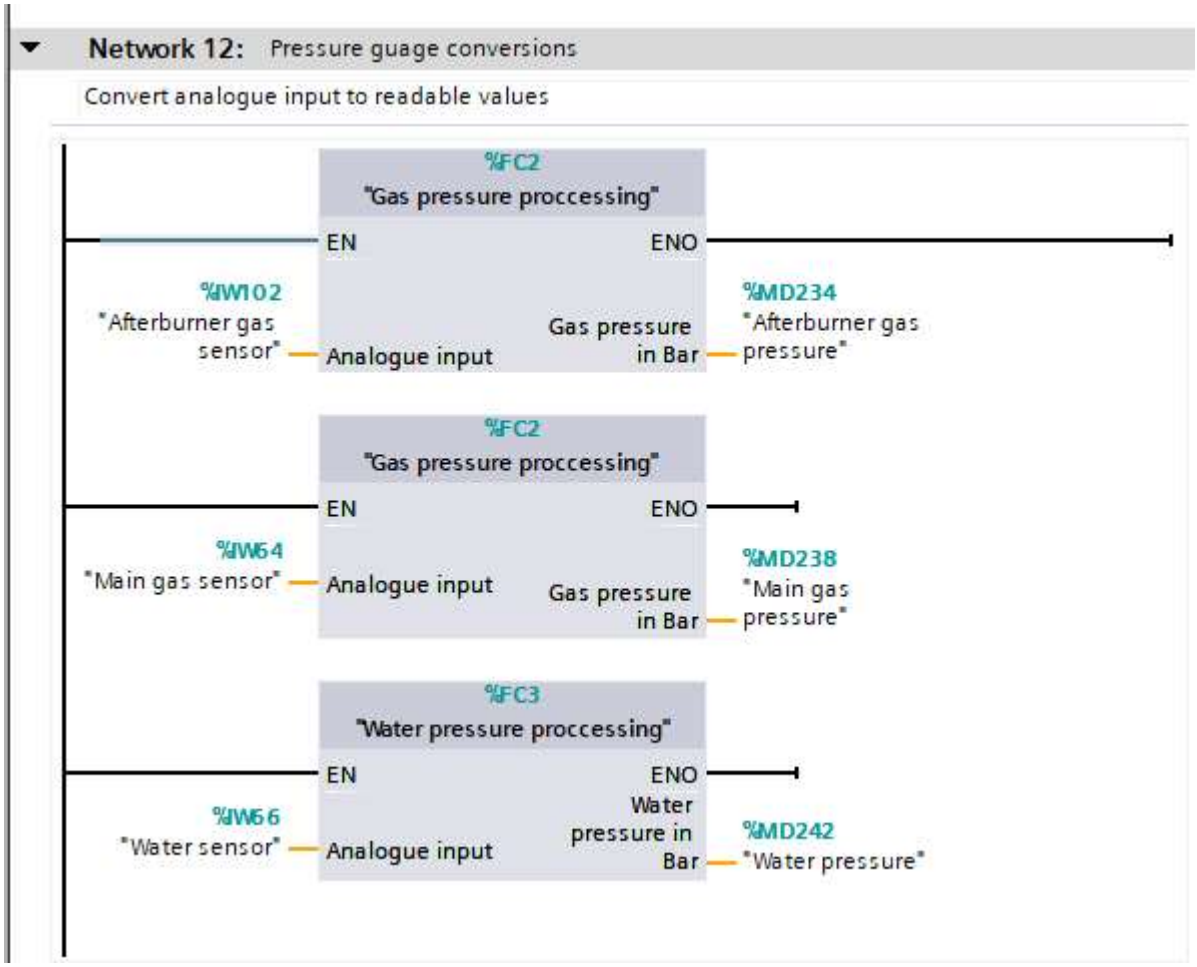

Figure 110 - Network 12, pressure processing

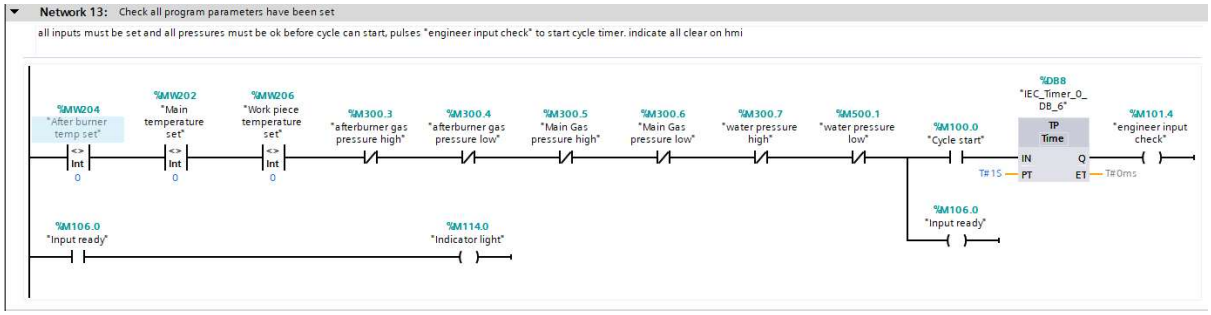

Figure 111 - Network 13, input check

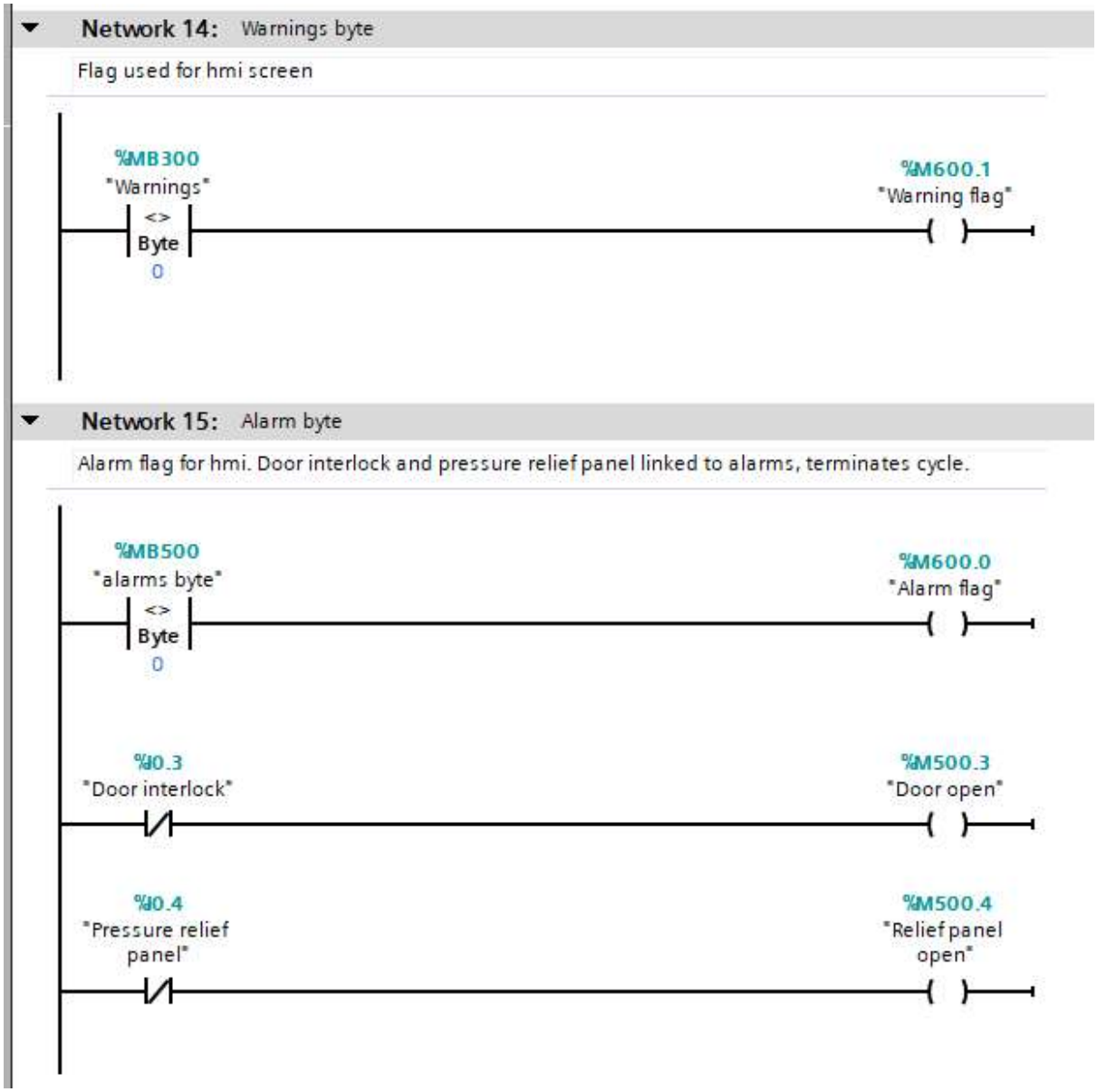

Figure 112 - Network 14 and 15, alarm and warning byte

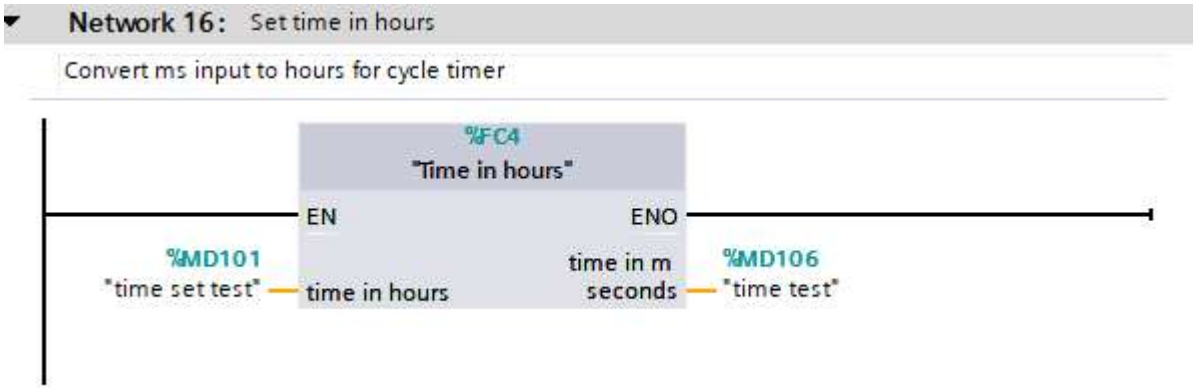

Figure 113 - Network 16, cycle time set in hours

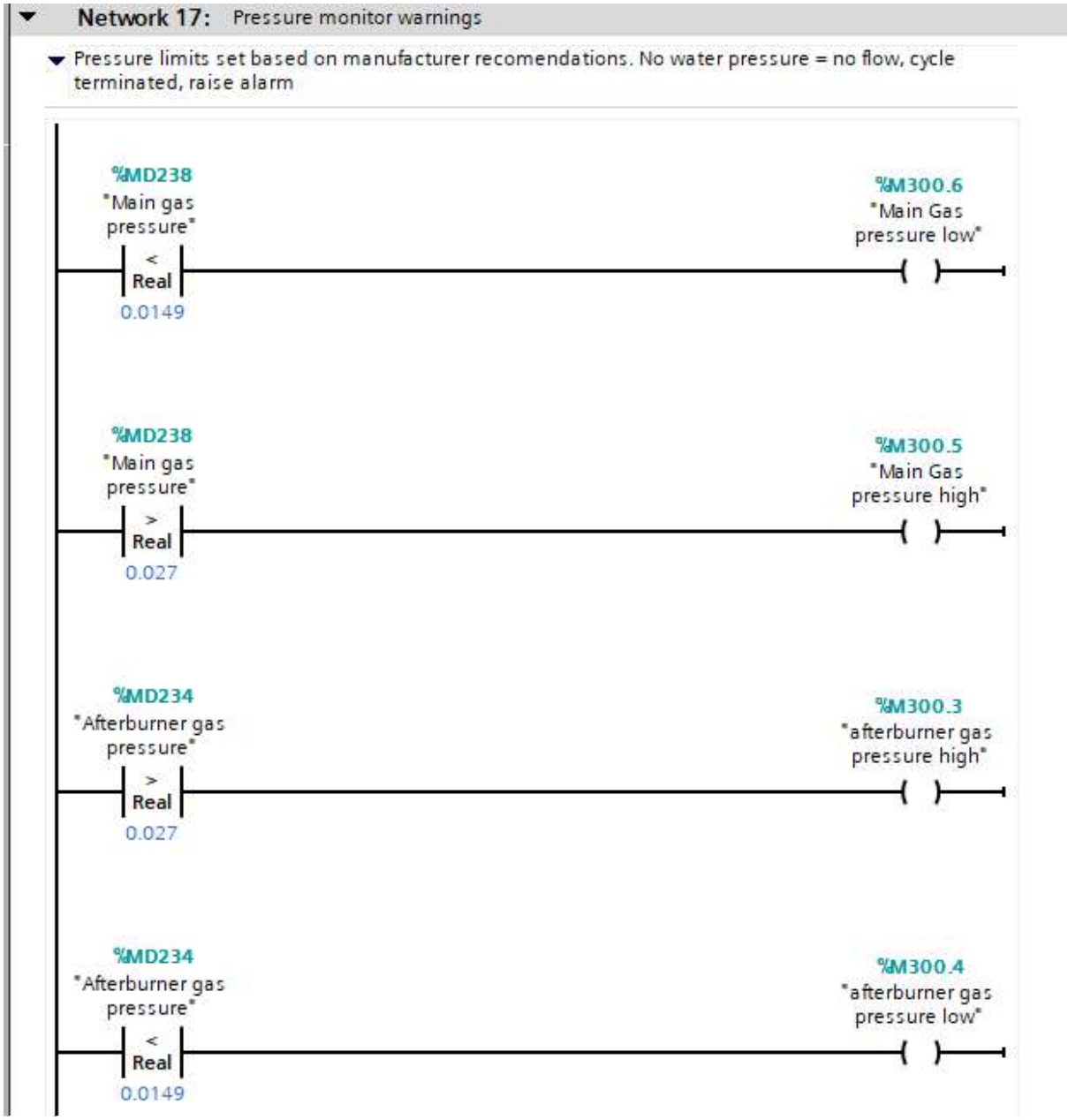

Figure 114 - Network 17 part 1, pressure monitoring

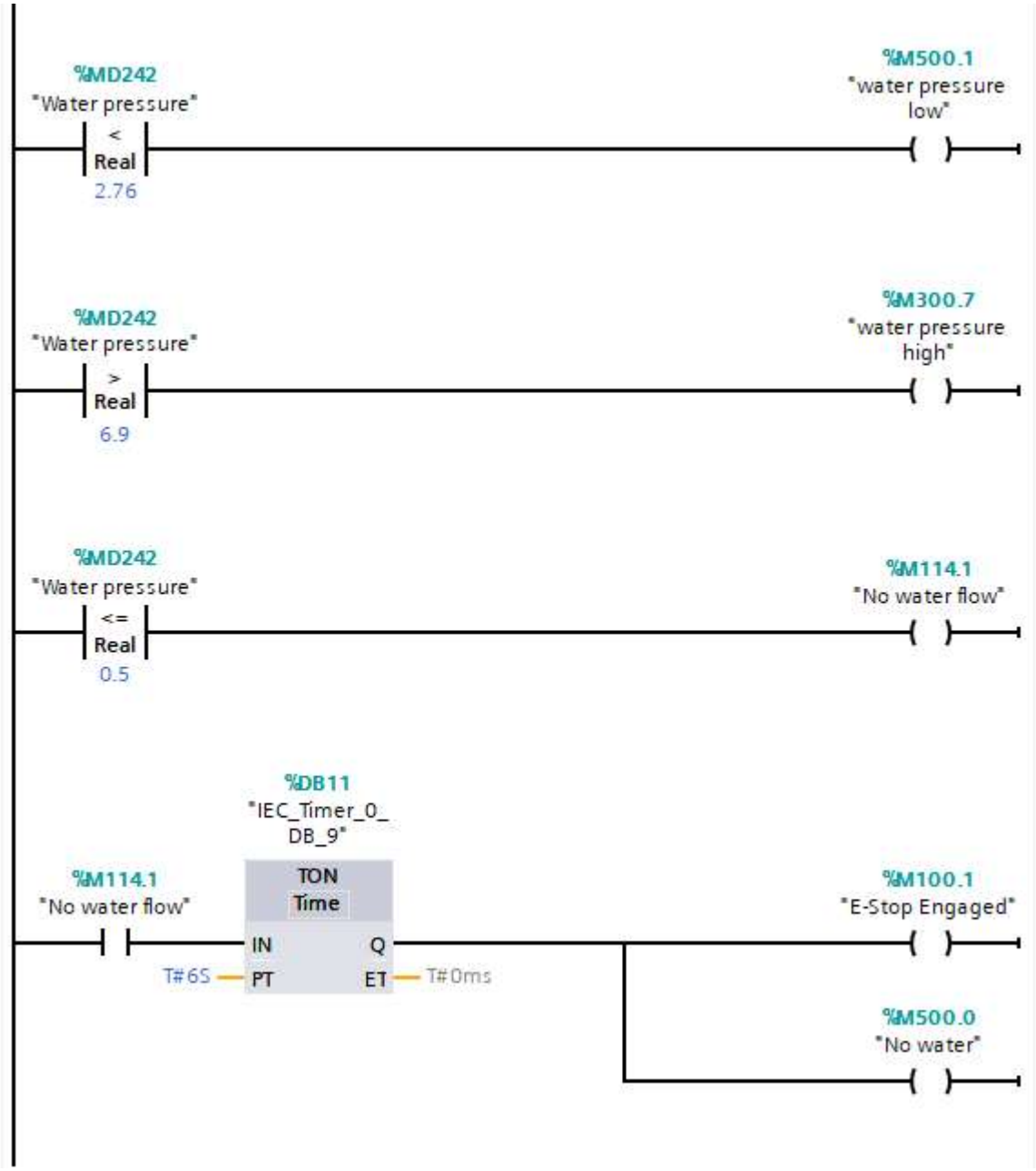

Figure 115 - Network 17 part 2, No water triggers Emergency stop

Appendix 3 – Program Tags

PLC tags

	Name	Tag table	Data type	Address	Retain	Acces...	Writa...	Visibl...	Comment
1	Start	Inputs	Bool	%I0.0		✓	✓	✓	Start button
2	Stop	Inputs	Bool	%I0.1		✓	✓	✓	Stop button
3	Emergency stop	Inputs	Bool	%I0.2		✓	✓	✓	Emergency stop button
4	Door interlock	Inputs	Bool	%I0.3		✓	✓	✓	Door interlock
5	Pressure relief panel	Inputs	Bool	%I0.4		✓	✓	✓	Pressure releif panel
6	Main gas sensor	Inputs	Word	%IW64		✓	✓	✓	Analogue input 0-1 bar
7	Water sensor	Inputs	Word	%IW66		✓	✓	✓	Analogue input 0-10 bar
8	Afterburner thermocouple	Inputs	Word	%IW96		✓	✓	✓	Analogue input 0-1000 degrees (0-27648)
9	Main burner thermocouple	Inputs	Word	%IW98		✓	✓	✓	Analogue input 0-1000 degrees
10	Work peice thermocouple	Inputs	Word	%IW100		✓	✓	✓	Analogue input 0-1000 degrees
11	Afterburner gas sensor	Inputs	Word	%IW102		✓	✓	✓	Analogue input 0-1 bar
12	Signal	Outputs	Bool	%Q0.0		✓	✓	✓	Cycle running
13	Gas valve AB	Outputs	Bool	%Q0.1		✓	✓	✓	Afterburner gas valve solenoid
14	AB ignition	Outputs	Bool	%Q0.2		✓	✓	✓	Afterburner ignition
15	AB Blower	Outputs	Bool	%Q0.3		✓	✓	✓	Afterburner blower motor
16	Gas valve Main	Outputs	Bool	%Q0.4		✓	✓	✓	Main burner gas valve solenoid
17	Main Ignition	Outputs	Bool	%Q0.5		✓	✓	✓	Mainburner ignition
18	Main blower	Outputs	Bool	%Q0.6		✓	✓	✓	Mainburner blower motor
19	Water valve	Outputs	Bool	%Q0.7		✓	✓	✓	Water valve solenoid
20	Afterburner Digital display	Default tag table	Int	%QW48		✓	✓	✓	
21	Main burner digital display	Default tag table	Int	%QW50		✓	✓	✓	
22	Workpiece digital display	Default tag table	Int	%QW52		✓	✓	✓	
23	Main gas Digital display	Default tag table	Int	%QW54		✓	✓	✓	
24	Afterburner gas digital display	Default tag table	Int	%QW56		✓	✓	✓	
25	Water pressure digital display	Default tag table	Int	%QW58		✓	✓	✓	
26	Cycle start	Memory	Bool	%M100.0		✓	✓	✓	Start cycle
27	E-Stop Engaged	Memory	Bool	%M100.1		✓	✓	✓	E-Stop Engaged
28	E-stop V	Memory	Bool	%M100.6		✓	✓	✓	HMI E stop
29	time set test	Memory	Time	%MD101		✓	✓	✓	Set cycle time in hours
30	Cut AB gas	Memory	Bool	%M101.0		✓	✓	✓	Stop Afterburner gas valve
31	Stop pressed	Memory	Bool	%M101.1		✓	✓	✓	
32	Afterburner reignition	Memory	Bool	%M101.2		✓	✓	✓	Afterburner re-ignition cycle start
33	Cut Main gas	Memory	Bool	%M101.3		✓	✓	✓	Stop mainburner gas valve
34	engineer input check	Memory	Bool	%M101.4		✓	✓	✓	Check all program parameters have been s
35	Afterburner malfunction ON	Memory	Bool	%M101.6		✓	✓	✓	Afterburner malfunction flag
36	Main burner malfunction ON	Memory	Bool	%M101.7		✓	✓	✓	Main burner malfuction flag
37	Time remaining	Memory	Time	%MD105		✓	✓	✓	
38	Cycle finish	Memory	Bool	%M105.0		✓	✓	✓	
39	time test	Memory	Time	%MD106		✓	✓	✓	cycle time in hours
40	Input ready	Memory	Bool	%M106.0		✓	✓	✓	
41	Cycle timer	Memory	Time	%MD110		✓	✓	✓	Cycle timer

Figure 116 - PLC tags

42	Indicator light	Memory	Bool	%M114.0	☐	☑	☑	☑	
43	No water flow	Memory	Bool	%M114.1	☐	☑	☑	☑	
44	Cycle time set	Memory	Int	%MW200	☐	☑	☑	☑	Set cycle duration in ms for simulation
45	Main temperature set	Memory	Int	%MW202	☐	☑	☑	☑	Set main temperature limit
46	After burner temp set	Memory	Int	%MW204	☐	☑	☑	☑	Set afterburner temperature limit
47	Work piece temperature set	Memory	Int	%MW206	☐	☑	☑	☑	Set workpiece temperature limit
48	Cycle time memory	Memory	Int	%MW208	☐	☑	☑	☑	
49	Afterburner temperature	Memory	Real	%MD208	☐	☑	☑	☑	Afterburner temperature reading
50	Mainburner temperature	Memory	Real	%MD210	☐	☑	☑	☑	Main burner temperature reading
51	Workpiece temperature	Memory	Real	%MD212	☐	☑	☑	☑	Workpiece temperature reading
52	Afterburner overtemp real	Memory	Real	%MD216	☐	☑	☑	☑	Afterburner temperature limit + 50 degrees
53	Afterburner undertemp real	Memory	Real	%MD220	☐	☑	☑	☑	Afterburner temperature limit - 50 degrees
54	Mainburner overtemp real	Memory	Real	%MD224	☐	☑	☑	☑	Main burner temperature limit + 50 degree
55	Mainburner undertemp real	Memory	Real	%MD228	☐	☑	☑	☑	
56	Workpiece overtemp real	Memory	Real	%MD232	☐	☑	☑	☑	Workpiece temperature limit +50 degrees
57	Afterburner gas pressure	Memory	Real	%MD234	☐	☑	☑	☑	Afterburner gas pressure reading
58	Main gas pressure	Memory	Real	%MD238	☐	☑	☑	☑	Main gas pressure reading
59	Water pressure	Memory	Real	%MD242	☐	☑	☑	☑	Water pressure reading
60	workpiece slightly overtemp	Memory	Real	%MD244	☐	☑	☑	☑	
61	Warnings	Warnings	Byte	%MB300	☐	☑	☑	☑	
62	Afterburner over temp	Warnings	Bool	%M300.0	☐	☑	☑	☑	
63	Afterburner undertemp	Warnings	Bool	%M300.1	☐	☑	☑	☑	
64	Mainburner overtemp	Warnings	Bool	%M300.2	☐	☑	☑	☑	
65	afterburner gas pressure high	Warnings	Bool	%M300.3	☐	☑	☑	☑	
66	afterburner gas pressure low	Warnings	Bool	%M300.4	☐	☑	☑	☑	
67	Main Gas pressure high	Warnings	Bool	%M300.5	☐	☑	☑	☑	
68	Main Gas pressure low	Warnings	Bool	%M300.6	☐	☑	☑	☑	
69	water pressure high	Warnings	Bool	%M300.7	☐	☑	☑	☑	
70	alarms byte	Alarms	Byte	%MB500	☐	☑	☑	☑	
71	No water	Alarms	Bool	%M500.0	☐	☑	☑	☑	
72	water pressure low	Alarms	Bool	%M500.1	☐	☑	☑	☑	
73	Workpiece overtemp	Alarms	Bool	%M500.2	☐	☑	☑	☑	
74	Door open	Alarms	Bool	%M500.3	☐	☑	☑	☑	
75	Relief panel open	Alarms	Bool	%M500.4	☐	☑	☑	☑	
76	Afterburner malfunction	Alarms	Bool	%M500.6	☐	☑	☑	☑	Afterburner not heating (no ignition)
77	Main burner malfuction	Alarms	Bool	%M500.7	☐	☑	☑	☑	Main burner not heating (no ignition)
78	A.b malfunction alarm	Alarms	Bool	%M501.0	☐	☑	☑	☑	
79	Main malfunction alarm	Alarms	Bool	%M501.1	☐	☑	☑	☑	
80	Alarm flag	Alarms	Bool	%M600.0	☐	☑	☑	☑	
81	Warning flag	Warnings	Bool	%M600.1	☐	☑	☑	☑	

Figure 117 - PLC tags part 2

HMI tags

Name	Tag table	Data type	Connection	PLC name	PLC tag	Address	Access mode	Acquisition cycle	Source comment
AB overtemp warning	Default tag table	Bool	HMI_Conne...	PLC_1	"Afterburner over tem...		<symbolic access>	1 s	
AB undertemp warning	Default tag table	Bool	HMI_Connectio...	PLC_1	"Afterburner undertemp"		<symbolic access>	1 s	
afteburner gas pressure high	Default tag table	Bool	HMI_Connectio...	PLC_1	"afterburner gas pressure.		<symbolic access>	1 s	
After burner temp set	Default tag table	Int	HMI_Connectio...	PLC_1	"After burner temp set"		<symbolic access>	1 s	Set afterburner temperature limit
Afterburner gas pressure	Default tag table	Real	HMI_Connectio...	PLC_1	"Afterburner gas pressure"		<symbolic access>	1 s	Afterburner gas pressure reading
Afterburner gas pressure low	Default tag table	Bool	HMI_Connectio...	PLC_1	"afterburner gas pressure.		<symbolic access>	1 s	
Afterburner malfunction	Default tag table	Bool	HMI_Connectio...	PLC_1	"Afterburner malfunction"		<symbolic access>	1 s	Afterburner not heating (no ignition)
Afterburner temp	Default tag table	Real	HMI_Connectio...	PLC_1	"Afterburner temperature"		<symbolic access>	1 s	Afterburner temperature reading
Alarm on	Default tag table	Bool	HMI_Connectio...	PLC_1	"Alarm flag"		<symbolic access>	1 s	
Cycle controls	Default tag table	Bool	HMI_Connectio...	PLC_1	"Cycle start"		<symbolic access>	1 s	Start cycle
Data_block_1_T1	Default tag table	Time	HMI_Connectio...	PLC_1	Data_block_1.T1		<symbolic access>	1 s	
Door open	Default tag table	Bool	HMI_Connectio...	PLC_1	"Door open"		<symbolic access>	1 s	
engineer check	Default tag table	Bool	HMI_Connectio...	PLC_1	"Indicator light"		<symbolic access>	1 s	
E-stop Depressed	Default tag table	Bool	HMI_Connectio...	PLC_1	"E-Stop Engaged"		<symbolic access>	1 s	E-Stop Engaged
E-stop HMI	Default tag table	Bool	HMI_Connectio...	PLC_1	"E-stop V"		<symbolic access>	1 s	HMI E stop
Main burner temp	Default tag table	Real	HMI_Connectio...	PLC_1	"Mainburner temperature"		<symbolic access>	1 s	Main burner temperature reading
Main burner temp set	Default tag table	Int	HMI_Connectio...	PLC_1	"Main temperature set"		<symbolic access>	1 s	Set main temperature limit
Main gas pressure	Default tag table	Real	HMI_Connectio...	PLC_1	"Main gas pressure"		<symbolic access>	1 s	Main gas pressure reading
Main gas pressure high	Default tag table	Bool	HMI_Connectio...	PLC_1	"Main Gas pressure high"		<symbolic access>	1 s	
Main gas pressure low	Default tag table	Bool	HMI_Connectio...	PLC_1	"Main Gas pressure low"		<symbolic access>	1 s	
Mainburner malfunction	Default tag table	Bool	HMI_Connectio...	PLC_1	"Main burner malfuction"		<symbolic access>	1 s	Main burner not heating (no ignition)
Mainburner over temp	Default tag table	Bool	HMI_Connectio...	PLC_1	"Mainburner overtemp"		<symbolic access>	1 s	
No water flow	Default tag table	Bool	HMI_Connectio...	PLC_1	"No water"		<symbolic access>	1 s	
Pressure relief panel missing	Default tag table	Bool	HMI_Connectio...	PLC_1	"Relief panel open"		<symbolic access>	1 s	
Tag_ScreenNumber	Default tag table	UInt	<Internal tag>		<Undefined>			1 s	
Time remaining	Default tag table	Time	HMI_Connectio...	PLC_1	"Cycle timer"		<symbolic access>	1 s	Cycle timer
time set test	Default tag table	Time	HMI_Connectio...	PLC_1	"time set test"		<symbolic access>	1 s	Set cycle time in hours
Warning	Default tag table	Bool	HMI_Connectio...	PLC_1	"Warning flag"		<symbolic access>	1 s	
Water pressure	Default tag table	Real	HMI_Connectio...	PLC_1	"Water pressure"		<symbolic access>	1 s	Water pressure reading
Water pressure high	Default tag table	Bool	HMI_Connectio...	PLC_1	"water pressure high"		<symbolic access>	1 s	
Water pressure low	Default tag table	Bool	HMI_Connectio...	PLC_1	"water pressure low"		<symbolic access>	1 s	
Work piece temp	Default tag table	Real	HMI_Connectio...	PLC_1	"Workpiece temperature"		<symbolic access>	1 s	Workpiece temperature reading
Work piece temp set	Default tag table	Int	HMI_Connectio...	PLC_1	"Work piece temperature ..		<symbolic access>	1 s	Set workpiece temperature limit
Workpiece overtemp	Default tag table	Bool	HMI_Connectio...	PLC_1	"Workpiece overtemp"		<symbolic access>	1 s	

Figure 118 - HMI tags

Appendix 4 – Factory design

Figure 119 - Full factory

Figure 120 - Gas line pressure control, stack light indicator for ignition and blower

Figure 121 - Water pressure control and water conveyor

Figure 122 - Control panel and signal light

Figure 123 - Thermocouple temperature control

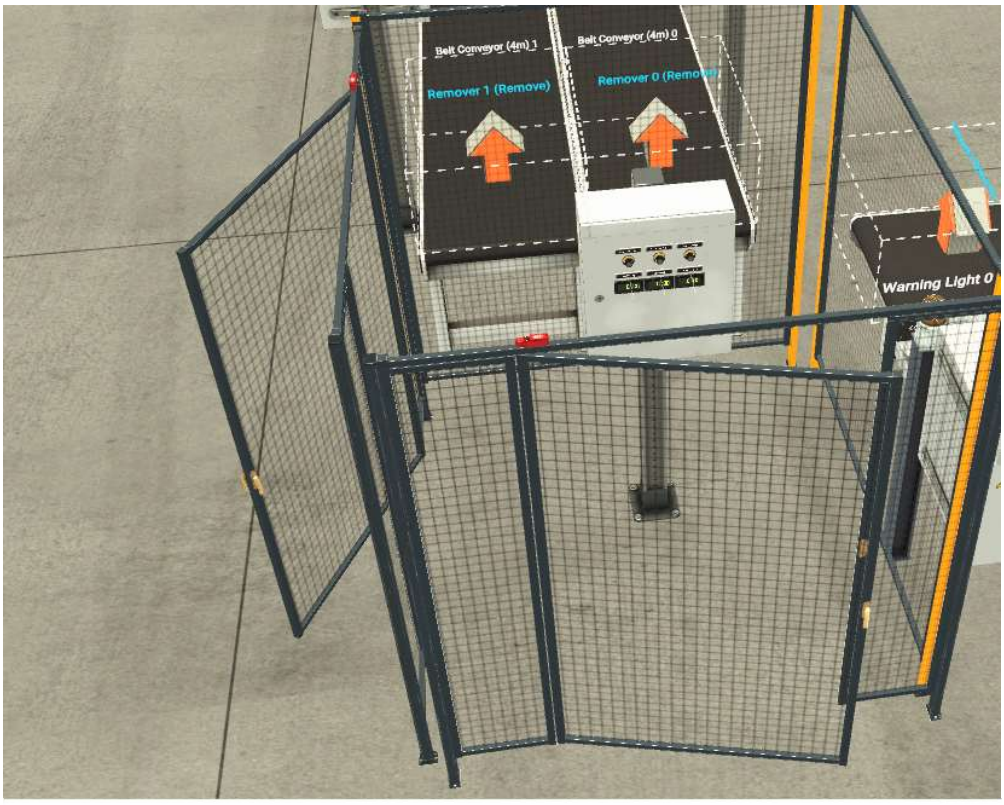

Figure 124 - Relief panel and door interlock triggers

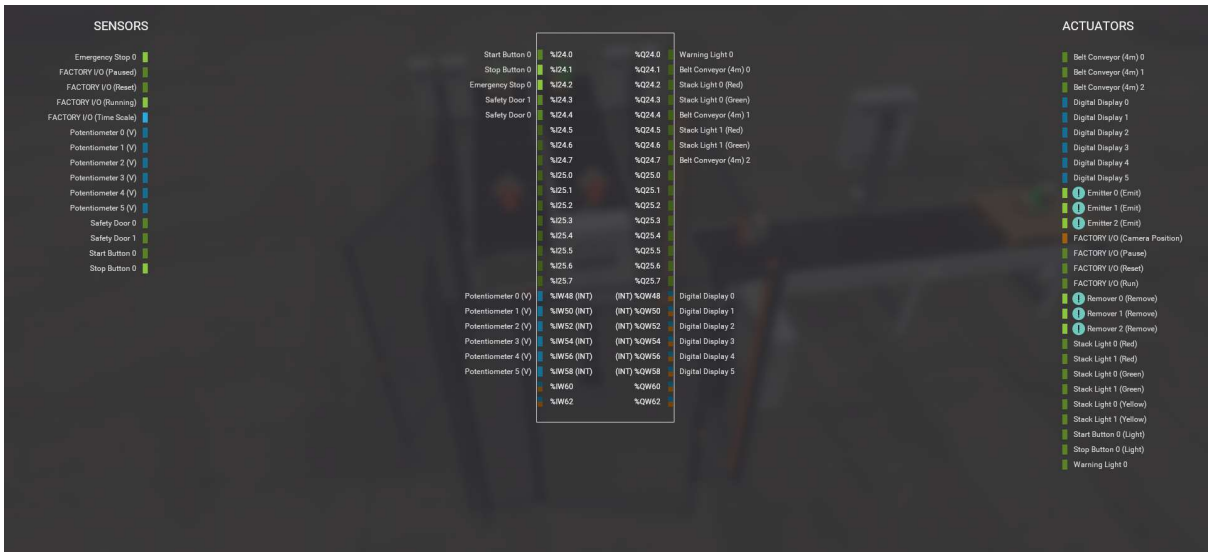

Figure 125 - Factory IO input/output configuration

Appendix 5 – Prototype build

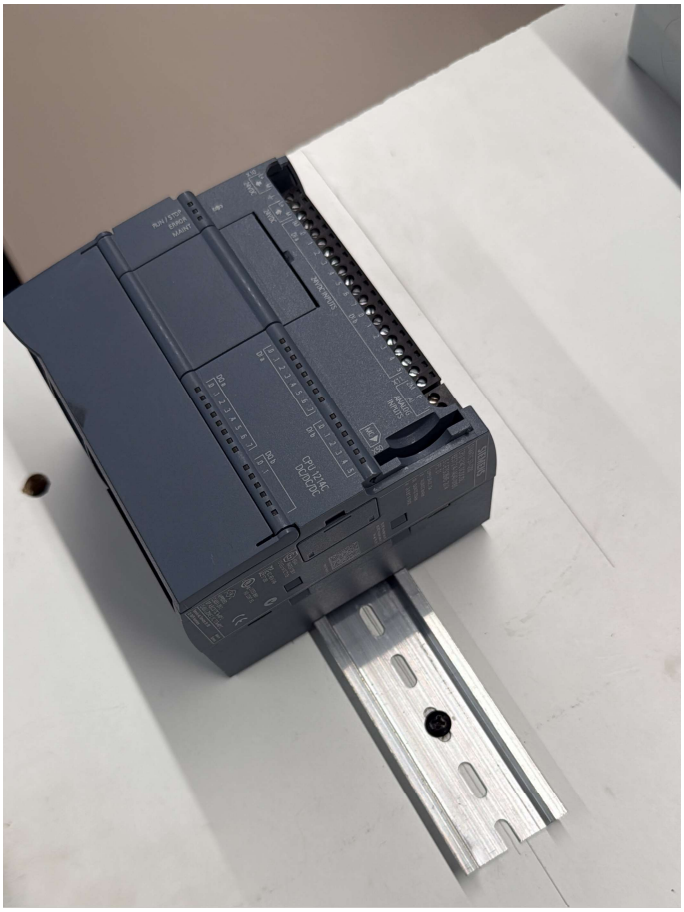

Figure 126 - PLC mounted to din rail

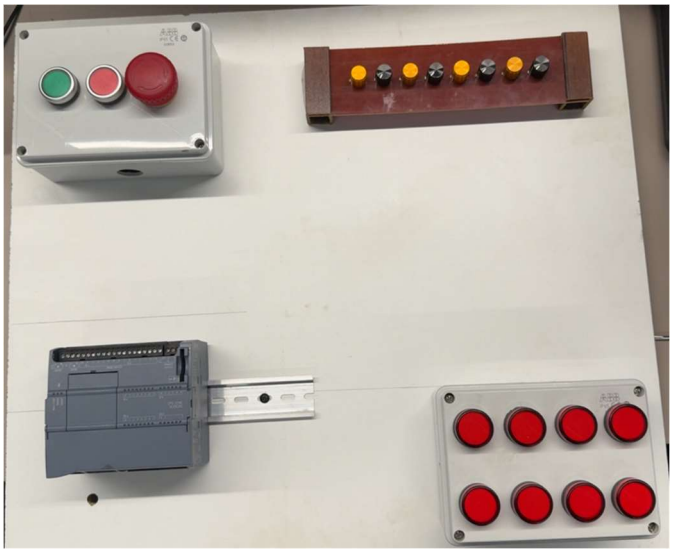

Figure 127 - Main components mounted

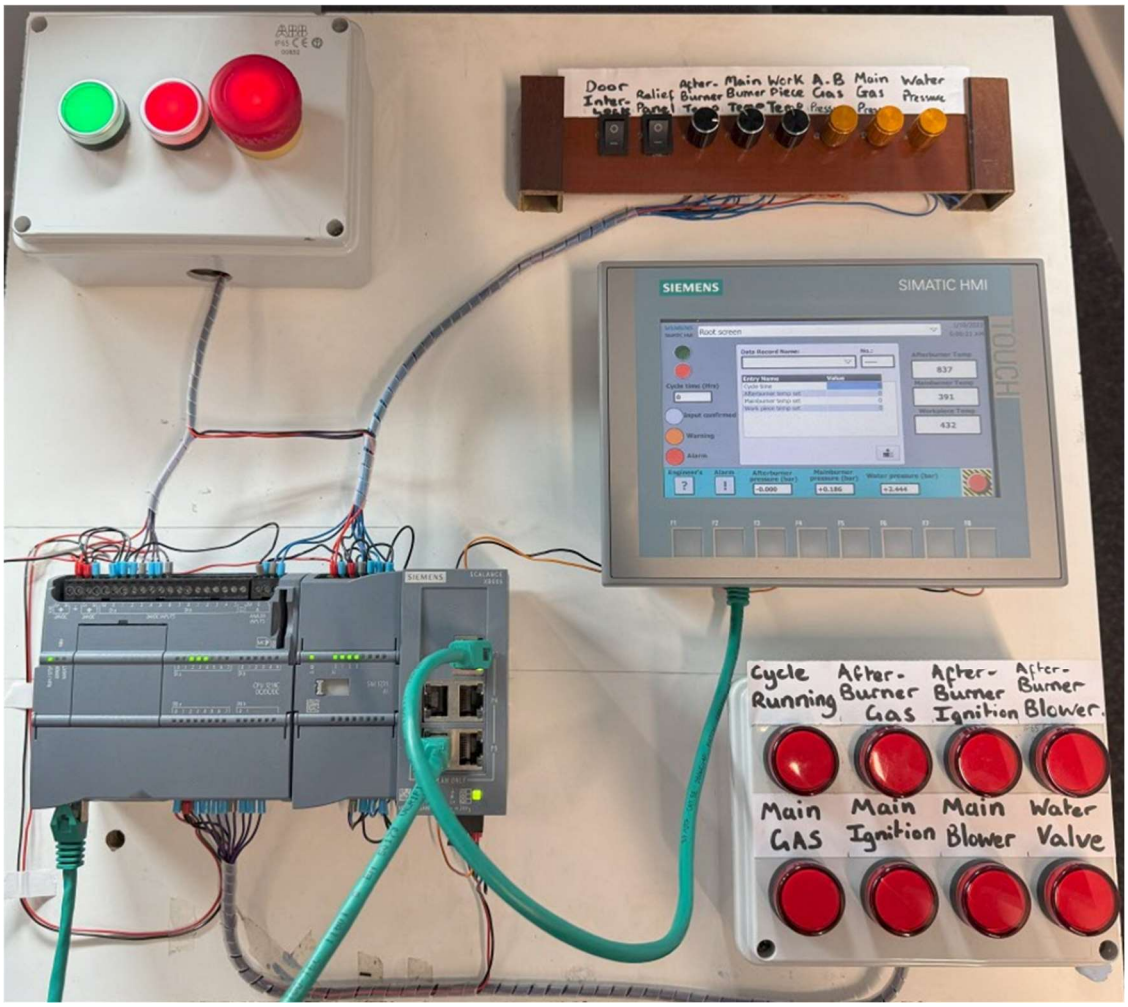

Figure 128 - Finished prototype build

Figure 129 - Controls for thermocouples, pressure gauges, door interlock and pressure relief panel

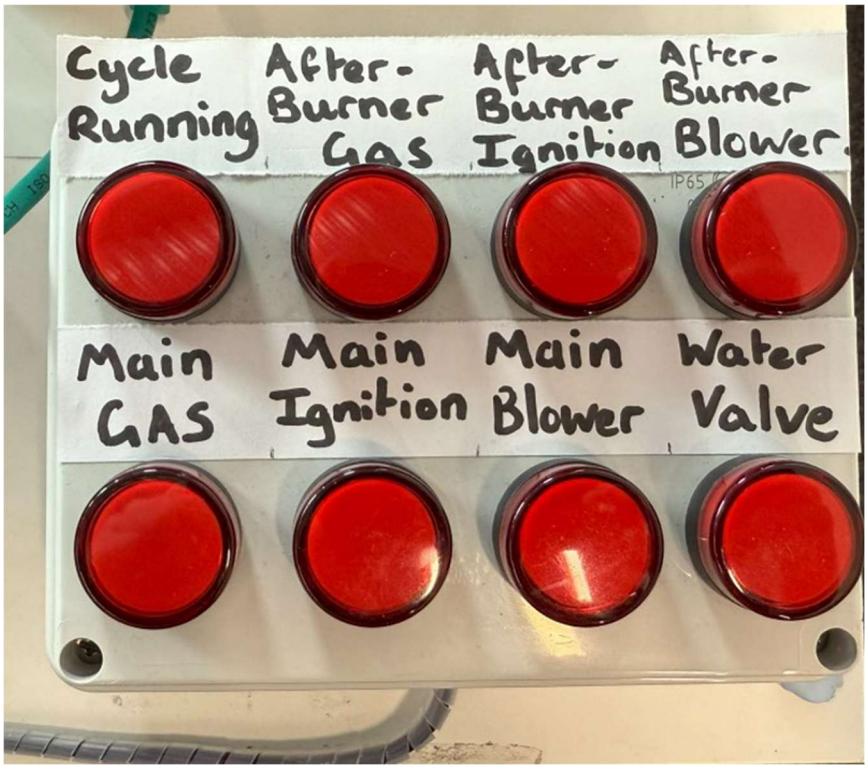

Figure 130 - Output indicators

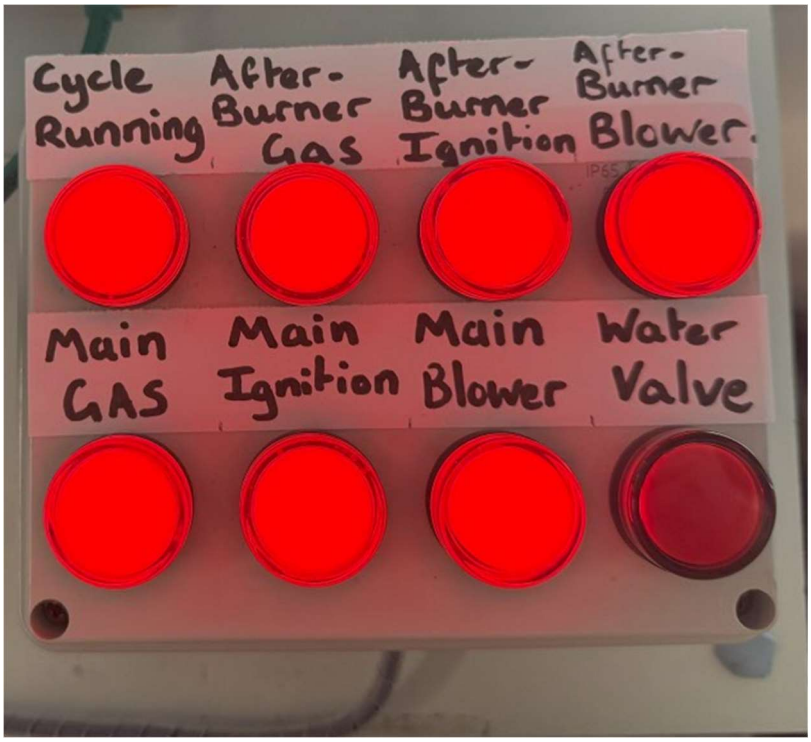

Figure 131 - Output indicators, operating

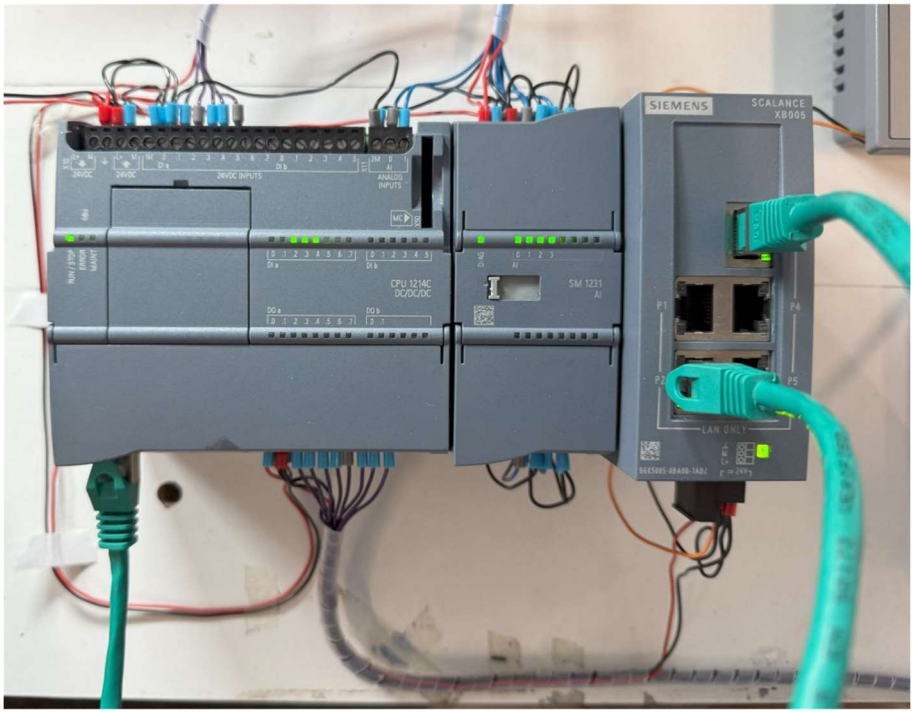

Figure 132 - PLC, analogue input module, and ethernet switch

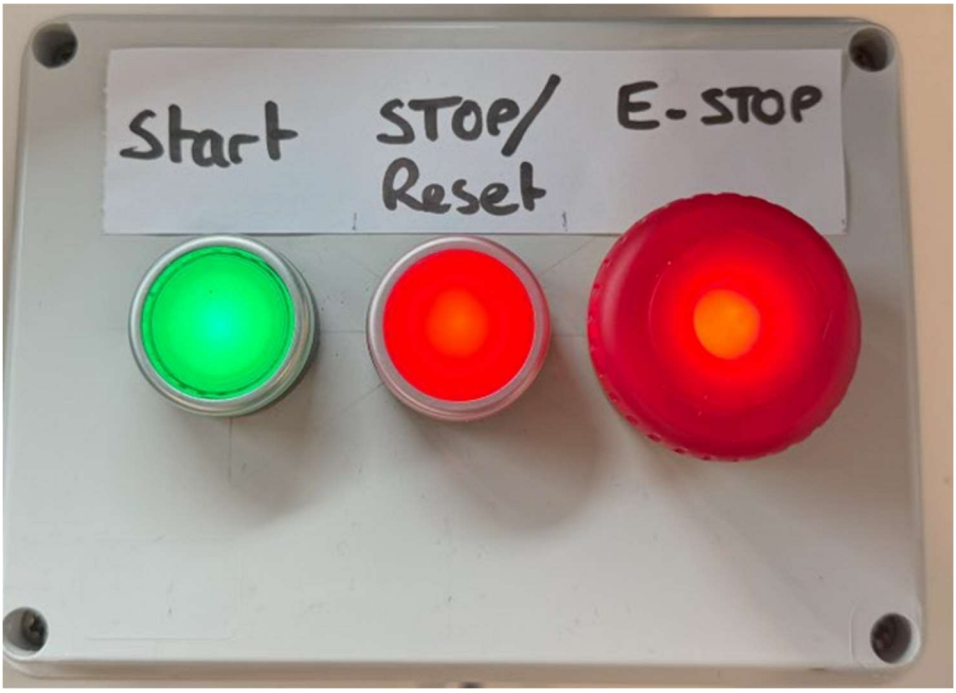

Figure 133 -Cycle controls

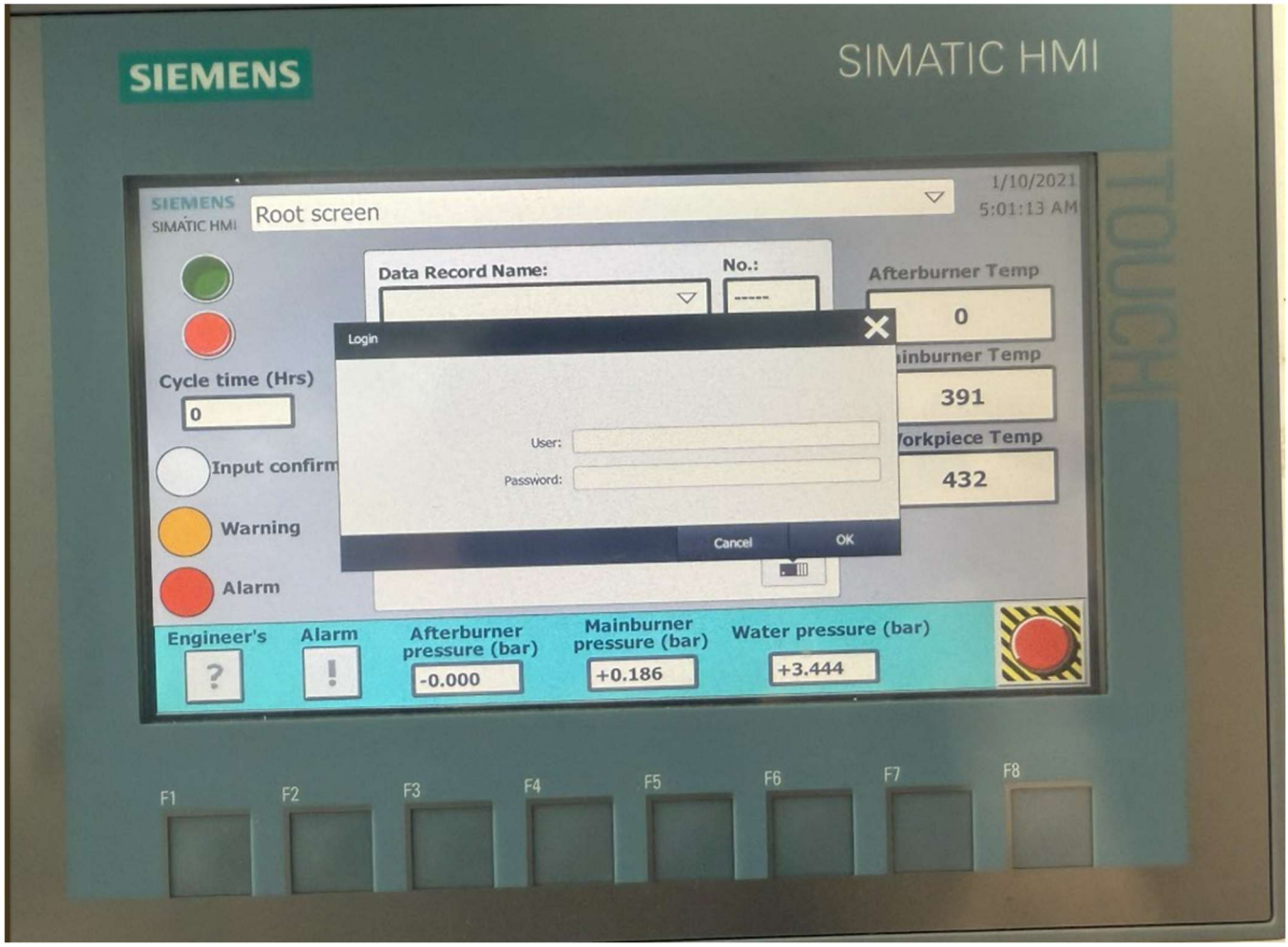

Figure 134 - Password control for cycle settings

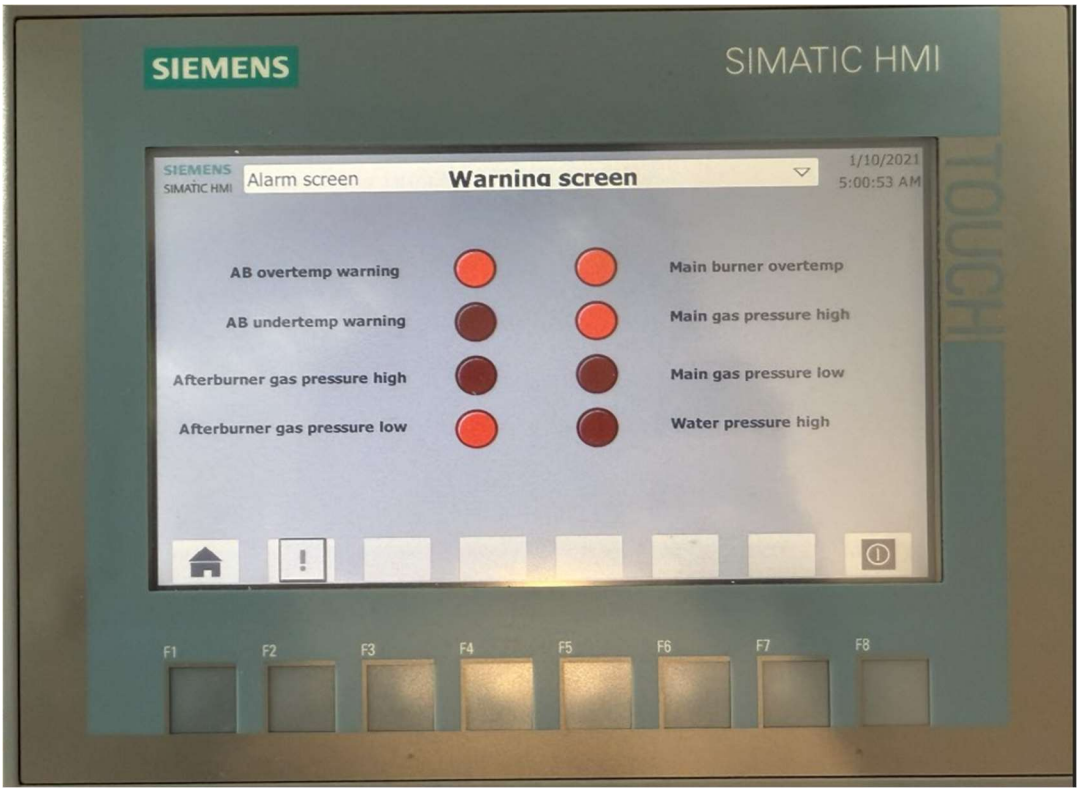

Figure 135 - Warning screen with warning examples

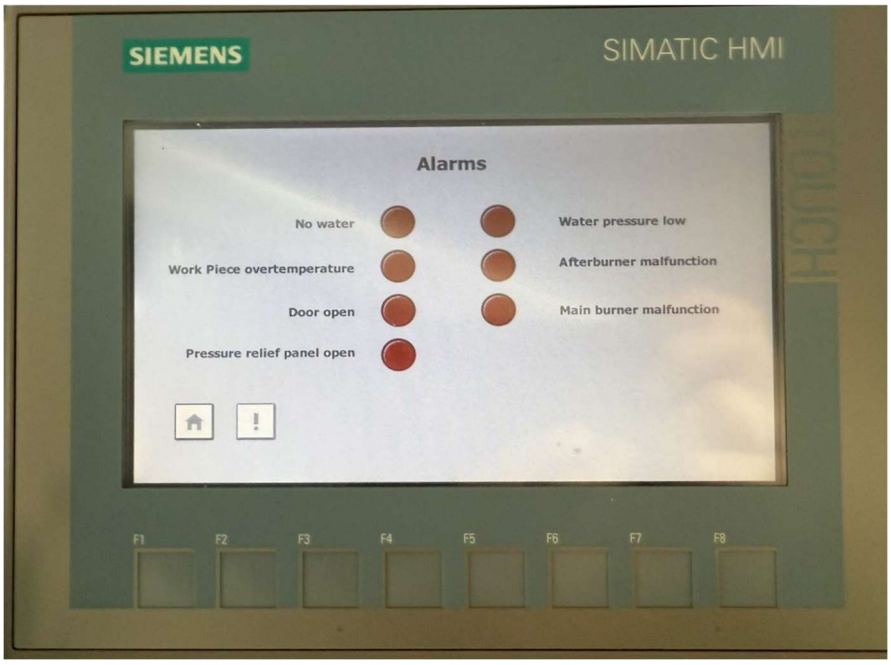

Figure 136 - Alarm screen

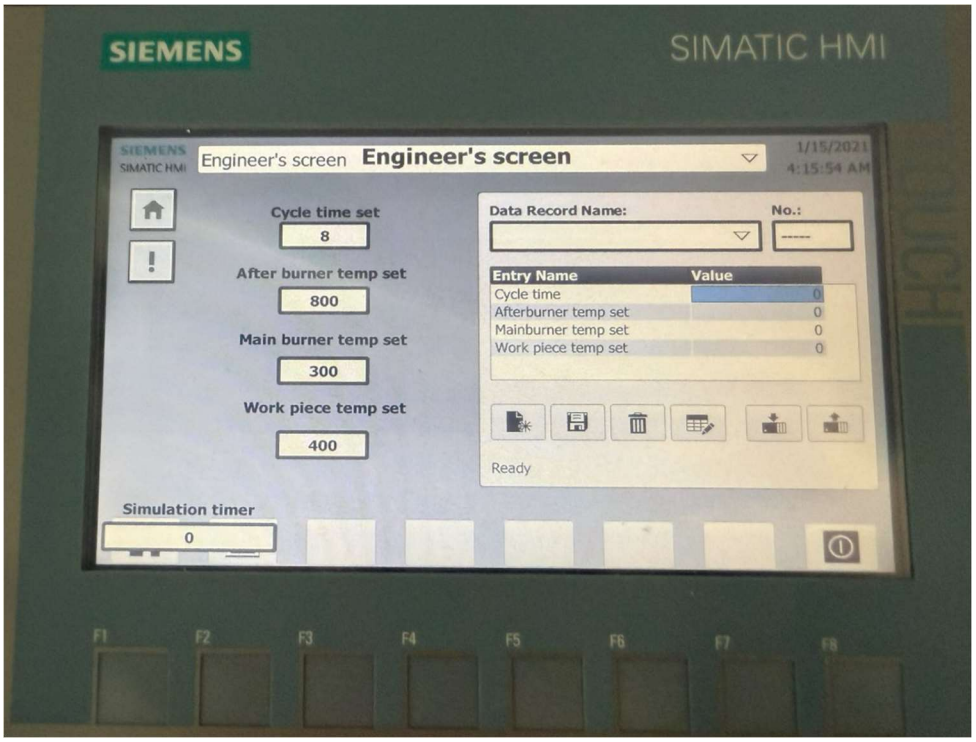

Figure 137 - Engineer's screen

Appendix 6 – Logbook

10/10/24

Steve outlined the requirements for the project. An idea was selected to upgrade the workplace burn out oven. Replacing the relay-controlled system with a PLC. Research must be carried out to determine the requirements to upgrade the control system.

The manufacturer of the burnout oven was contacted in order to learn more about the control system implemented in the current system. The manufacturer provided a wiring diagram for the relays providing insight into the current system.

A meeting was set with another Burn-out oven manufacturer to further discuss their control system.

17/10/24

The project proposal was continued following the outline provided on moodle. A meeting was set with Rotary Engineering, a burnout oven manufacturer. The meeting was organised for the 18/10/24.

Research was continued to uncover credible sources carrying out similar projects.

18/10/24

Had teams meeting with Simon Swallow from Rotary Engineering to discuss the operation of burn – off ovens. He provided a fantastic insight, greatly aiding the project development.

24/10/24

Finalise project proposal

31/10/24

No progress

07/11/24

No progress

14/11/24

Outlined research requirements, began formatting final report

28/11/24

Researched into efficiency losses in electric motors

05/12/24

Began winter maintenance schedule resulting in unforeseen delays to project.

12/12/24

Winter maintenance schedule interrupted project progression

19/12/24

Continued with literature review into system requirements and control methods

26/12/24

Began component selection for project. Creating comparison tables and continued with report write up.

Figure 138 - Log book part 1

02/01/25
Finalised component selection for project. Selected PLC and module requirements

09/01/25
Began compiling presentation for interim Viva

16/01/25
Completed interim Viva presentation

23/01/25
Set up siemens step 7. Listed all system requirements to begin designing the program.

30/01/25
Researched into analogue input requirements for Siemens TIA. Continued programming ladder.

06/02/25
Progressed with programming. Designed analogue input conversion function block

13/02/25
Continue with Ladder program, regularly testing functions using Factory IO. Finished designing HMI screens

20/02/25
Finalised ladder program and began function testing with factory IO

27/02/25
Finished testing Factory IO simulation. Started building prototype

06/03/25
Continue with prototype wiring, awaiting delivery of analogue input module

13/03/25
Finish building prototype, ready for function testing. Work commencing on power and drives assignment so less time for project. On track with Gantt chart prediction.

20/03/25
Work continues on power electronics and drives assignment, project on hold

27/03/25
Work continues on power electronics and drives assignment, project on hold.

3/04/25
Work continues on power electronics and drives assignment, project on hold.

10/04/25
Submitted assignment for power and drives, freeing up time for project report

Figure 139 - Log book part 2

17/04/25

Final tweaks on prototype build, fixed error with burner malfunction not triggering alarm indicator.

Proceed with design right up for report

24/04/25

Finalised project report, trimming down word count and formatting.

Figure 140 - Log book part 3