Prifysgol Cymru
Y Drindod Dewi Sant
University of Wales
Trinity Saint David

Implementation of an SF6 Monitoring System for High Voltage Equipment

by

Jay Popham

Supervisor: Gary Jones

Project submitted as part of the requirements for the award of

BEng (Hons) Electrical and Electronics Engineering

April 2025

DECLARATION

I, Jay Popham declare that I am the sole author of this Project; that all references cited have been consulted; that I have conducted all work of which this is a record, and that the finished work lies within the prescribed word limits.

This work has not previously been accepted as part of any other degree submission.

Date: 29/04/2025

FORM OF CONSENT

I Jay Popham hereby consent that my Project, submitted in candidature for the B.Sc. (Hons) Electrical and Electronical engineering degree, if successful, may be made available for inter-library loan or photocopying (subject to the law of copyright), and that the title and abstract may be made available to outside organisations.

Date: 29/04/2025

Acknowledgement

I would like to express my thanks to everyone who has supported me throughout my studies at the University of Wales Trinity Saint David. I am especially grateful to my whole family for their constant encouragement and belief in me.

My sincere thanks also go to my tutors—Stephen Mosey, Gary Jones, and Jenifer Prince Devaraj, Gareth Jones, & Stalin Jacob Wilson Packia Dhas —for their guidance, feedback, and support during my time at university. I would also like to thank my fellow students, Tom Hall and Connor Daniel, for their help and friendship over the past three years.

Abstract

This project focuses on the development and implementation of a monitoring system for sulphur hexafluoride (SF6) in high voltage gas-insulated switchgear (GIS) systems. SF6 plays a crucial role in the high voltage infrastructure due to its excellent insulating properties, however it is one of the most potent greenhouse gases. Unmonitored leaks not only compromise equipment reliability and personnel safety, but they also contribute significantly to environmental harm and regulatory violations. The primary aim is to enhance the reliability and safety of GIS operations while minimising environmental impact. The objectives include real-time monitoring of SF6 levels to ensure early detection of leaks, and compliance with environmental regulations.

To achieve these objectives, a combination of advanced sensor technology and data analytics are applied in this project. The system uses high-precision SF6 sensors with a centralised data acquisition platform, enabling continuous monitoring and analysis of gas concentrations in various gas zones.

In conclusion, the SF6 monitoring system for high voltage GIS not only meets regulatory requirements but also contributes to sustainability efforts in the energy sector. Recommendations for future work include the integration of predictive maintenance features. This project serves as a vital step towards more responsible management of SF6 in high voltage applications, promoting both operational efficiency and environmental stewardship.

Contents

Acknowledgement 3

Abstract 4

Introduction 9

1. Project Plan 10

2. Research & Review of Literature 11

2.1. Background Research 11

2.1.1. Existing Monitoring Systems 11

2.2. Section 1 – Literature Review 17

2.2.1. Environmental impacts 17

2.2.2. Regulatory Compliance 19

2.2.3. Leak Detection & Best practices 23

2.2.4. Role of AI technology and intelligent detection systems in leak prevention 27

2.2.5. Sustainable Alternatives to SF6 Gas 30

2.2.6. Impact on Cooperate responsibility and sustainability 34

2.2.7. Strategies for reporting and transparency in emissions data. 35

2.2.8. Stakeholder engagement and public awareness initiatives. 35

3. Section 2 – Work being undertaken and How (Development Methodology) 37

3.1. System Requirements 37

3.1.1. Identification of functional and non-functional requirements for the SF6 monitoring system. 37

3.1.2. Analysis of stakeholder needs and expectations. 38

3.1.3. Documentation of technical specifications 39

3.2. Data collection methods 39

3.3. Design methodology 41

3.3.1. Explanation of the design approach used. 41

3.1. Implementation Methodology 43

3.1.1. Outline of the overall implementation strategy. 43

3.1.2. Key phases of the implementation process. 44

3.2. Limitations 45

3.2.1. Identification of potential limitations in the research and implementation methodology. 45

3.2.2. Discussion of factors that may affect the validity and reliability of the findings. 45

3.2.3. Suggestions for mitigating these limitations in future research 46

3.3. Data Analysis Techniques 46

4. Section 3 – Design and Implementation 47

4.1. Sensor Selection 47

4.1.1. Overview of Existing Sensor 47

4.1.2. Sensor Specification 48

4.1.3. Potential Sensor's 50

4.1.4. Proposed Sensor 51

4.2. System Architecture 53

4.2.1. Overview of Existing Architecture 53

4.2.2. Proposed Architecture 56

4.2.3. Description of hardware and software components with Cost 57

4.2.4. Integration on monitoring technology with existing infrastructure 59

4.3. Additional Materials/ Information on the Installation 59

4.3.1. Cable selection 59

4.3.2. Cable support system 60

4.4. Block Diagram of System 61

4.5. Prototype 62

4.5.1. Siemens TIA 63

4.5.1.1. Flow Chart 63

4.5.1.2. PLC Tags 64

4.5.1.3. PLC Ladder Logic 64

4.5.1.4. HMI Tags 67

4.5.1.5. HMI set up 67

4.5.2. Prototype Components 71

4.5.2.1. Voltage regulator calculation 73

4.5.3. Circuit Diagram 74

74

4.5.4. Testing 75

4.5.5. Prototype Build 76

4.5.6. Simulation 78

4.6. Implementation of the Site Gas density Monitoring System _____83

4.6.1. Outline of the overall implementation strategy. _____83

4.6.1.1. Sensor positions in Substation _____83

4.6.1.2. Cabling from Sensor _____84

_____84

5. Evaluation _____85

6. Conclusion _____86

6.1. Suggestions for Further Work_____87

6.2. Final Summary _____87

7. Reflection _____88

Bibliography _____90

APPENDICEIS _____99

Appendix A _____99

Appendix B _____100

Appendix C _____101

Appendix D _____102

Appendix E _____103

Introduction

In high voltage electrical systems, the management and monitoring of sulphur hexafluoride (SF6), has become increasingly critical. SF6 is widely used as an insulating and arc-extinguishing medium in gas-insulated switchgear (GIS) due to its excellent electrical properties [1]. However, its potent greenhouse gas effects require stringent monitoring to mitigate environmental impacts. This project focuses on the implementation of a comprehensive SF6 monitoring system within a high voltage GIS framework, aiming to enhance the reliability and sustainability of electrical infrastructure.

The primary aim of this project is to develop an effective SF6 monitoring system that not only detects leaks but also provides real-time data analytics to inform maintenance and operational decisions.

To achieve this aim, several specific objectives were outlined. Firstly, a thorough review of existing SF6 monitoring technologies and methodologies to identify best practices was conducted. Secondly, a prototype monitoring system that integrates advanced sensors and data analytics tools was designed. The third aim set was to implement this system in a selected GIS substation and evaluate its performance in real-world conditions. The final aim was to analyse the data collected to assess the system's effectiveness in leak detection, environmental impact reduction and ease of use for the end user.

In the following chapters, the background of SF6 usage in high voltage systems is extensively reviewed by exploring the current challenges associated with its monitoring, and by presenting a detailed methodology for the proposed system. Subsequent sections present the design and implementation phases, followed by the design, implementation and testing a prototype, finally analysing the results. By the end of this report, it is aiming to provide a comprehensive understanding of how effective SF6 monitoring can contribute to both operational excellence and environmental stewardship in the energy sector.

1. Project Plan

Figure 1 below illustrates the initial Gannt Chart for the project which can also be found in Appendix A.

Project Start Date: 01 October 2024

Project Name: SF6 Gas Monitoring system

Task		Project Lead	Start Date	End Date	Days
	Project Proposal Development				
Task 1	Identify a project topic and a potential supervisor	J.Popham	01/10/2024	04/10/2024	4
Task 2	Begin researching the chosen topic	J.Popham	07/10/2024	16/10/2024	8
Task 3	Define the problem statement and project aims	J.Popham	17/10/2024	22/10/2024	4
Task 4	Outline project objectives and methods	J.Popham	23/10/2024	25/10/2024	3
Task 5	Develop a plan of action including sub-tasks	J.Popham	23/10/2024	25/10/2024	3
Task 6	Identify needed resources and references	J.Popham	23/10/2024	25/10/2024	3
Task 7	Start the writing the project proposal	J.Popham	17/10/2024	28/10/2024	8
Task 8	Complete the Ethics form	J.Popham	23/10/2024	25/10/2024	3
Task 9	Finalise and submit the project proposal by the deadline	J.Popham	28/10/2024	28/10/2024	1
Task 10	Discuss with supervisor on a weekly basis to refine the review	J.Popham	29/10/2024	29/10/2024	1
	Detailed Literature Review				
Task 1	Start researching and write the first draft of the lit review	J.Popham	30/10/2024	19/11/2024	15
Task 2	how the project will impact on cooperate responsibility and sustainability	J.Popham	20/11/2024	26/11/2024	5
Task 5	Continue detailed literature review	J.Popham	27/11/2024	11/12/2024	11
Task 6	Refine and finalise the literature review based on the supervisor feedback	J.Popham	12/12/2024	19/12/2024	6
Task 7	Start to think about design methodology	J.Popham	20/12/2024	24/12/2024	3
	Developtmet Methodology				
Task 1	Begin to outline System Requirements	J.Popham	02/01/2025	09/01/2025	6
Task 2	Outline potential data collection methods	J.Popham	10/01/2025	17/01/2025	6
Task 3	Outline design methodology, key principles and stakeholders for review	J.Popham	20/01/2025	27/01/2025	6
Task 4	Outline implementation methodology	J.Popham	28/01/2025	01/02/2025	4
Task 5	Identify potential limitations	J.Popham	03/02/2025	05/02/2025	3
Task 6	Outline Data Analysis Techniques	J.Popham	06/02/2025	08/02/2025	2
	Prepare for Interim Viva				
Task 1	Put research together for interim viva	J.Popham	06/01/2025	10/01/2025	5
Task 2	Start to prepare a PowerPoint presentation	J.Popham	11/01/2025	15/01/2025	3
Task 4	Attend the Interim Viva	J.Popham	16/01/2025	17/01/2025	2
	System Design & Implementation				
Task 1	Begin system design, based on research and supervisor feedback	J.Popham	20/01/2025	31/01/2025	10
Task 2	Outline implementation strategies and identify stakeholders	J.Popham	03/02/2025	07/02/2025	5
Task 3	Start to gather data using appropriate method	J.Popham	10/02/2025	21/02/2025	10
Task 5	Continue implementation of the system	J.Popham	24/02/2025	28/03/2025	25
Task 6	Conduct testing of system functionality and reliability	J.Popham	31/03/2025	11/04/2025	10
Task 7	Validate compliance with environmental regulations	J.Popham	14/04/2025	18/04/2025	5
Task 8	Document testing outcomes	J.Popham	21/04/2025	25/04/2025	5
	Data Analysis & Report Writing				
Task 1	Analyse data collected from the system	J.Popham	31/03/2025	11/04/2025	10
Task 2	Write up findings and discussion for the report	J.Popham	14/04/2025	25/04/2025	10
Task 3	Develop user manuals and guidelines	J.Popham	14/04/2025	21/04/2025	6
Task 4	Complete the bulk of the writing for the report.	J.Popham	31/03/2025	25/04/2025	20
Task 5	Review and edit the report	J.Popham	21/04/2025	28/04/2025	6
Task 6	Ensure all sections are complete	J.Popham	24/04/2025	28/04/2025	3
Task 7	Prepare a complete final draft for supervisor to read and comment on	J.Popham	24/04/2025	28/04/2025	3
Task 8	Finalise and submit the report by the deadline	J.Popham	29/04/2025	29/04/2025	1
Task 9	Prepare for the final viva.	J.Popham	29/04/2025	05/05/2025	5
	Final Viva Preperation & Poster				
Task 1	Practice and prepare for the final viva	J.Popham	30/04/2025	05/05/2025	4
Task 2	Develop and design your poster	J.Popham	30/04/2025	06/05/2025	5
Task 3	Prepare exhibition materials such as images and the questionnaire	J.Popham	30/04/2025	06/05/2025	5
Task 4	Attend the Final Viva	J.Popham	07/05/2025	07/05/2025	1
Task 5	Demonstrate the project deliverables	J.Popham	07/05/2025	07/05/2025	1
Task 6	Submit poster by the deadline	J.Popham	09/05/2025	09/05/2025	1
Task 7	Submit exhibition questionnaire	J.Popham	09/05/2025	09/05/2025	1

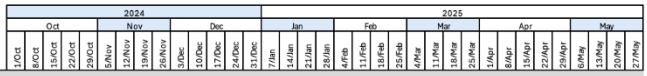

Figure 1: Initial Project Gannt Chart

2. Research & Review of Literature

2.1. Background Research

2.1.1. Existing Monitoring Systems

No.1 – Existing Installed at Baglan Bay

The Gas Monitoring System (GMS) is engineered for the purpose of supplying and analysing data from gas density sensors particularly within high voltage switching stations [2].. The system's core function lies in ensuring the reliable monitoring and analysis of gas density, a critical parameter for the safe and efficient operation of high-voltage equipment [2].

System Design and Components

The GMS is structured around several key components that work in concert to achieve its monitoring objectives:

- *DSIF (Density Sensor Interface):* This is the central unit of the GMS, acting as the primary interface for connecting and processing data from gas density sensors.

- *Converter Modules (WAN):* Responsible for detecting the current pulses emitted by the sensors, which correspond to the measured gas density. The WAN modules then convert these pulses into a format that the DSIF can process [2].

- *Visualisation System:* The GMS incorporates a visualisation system, often the CITECT SCADA software, to provide a user-friendly graphical interface. [2].

- *Networking Components:* The GMS employs a redundant fibre-optic network for communication between DSIF units and the central monitoring station. This network is designed with redundancy in mind, ensuring that data transmission remains operational even in the event of a network component failure [2].

- *Communication Card:* This card facilitates the connection between the DSIF and a standard PC, enabling data transfer and system configuration [2].

Operational Overview

The GMS operates through a coordinated process of data acquisition, analysis, and presentation:

- *Data Acquisition:* Gas density sensors, specifically Trafag type 8773, are connected to the DSIF. These sensors measure the gas density and transmit this information in the form of current pulses [2].

- *Signal Conversion:* The converter modules (WAN) detect these current pulses and convert them into digital signals that the DSIF can interpret [2].

- *Data Analysis:* The DSIF performs calculations on the received signals to determine the gas density and temperature. It also continuously monitors these values against pre-defined alarm and warning thresholds [2].

- *Alarming and Relay Signalling:* If the measured gas density falls below the configured warning or alarm limits, the DSIF activates corresponding relays. These relays can be connected to external alarm systems or control circuits, providing immediate notification of critical events [2].

- *Visualisation and Monitoring:* The CITECT visualisation system presents the sensor data in a clear and intuitive graphical format. Operators can monitor gas density levels, view historical trends, and acknowledge alarms through this interface [2].

Figure 2 presents the Margam Feeder circuit's gas zones, which shows the position of each sensor in each zone and the measurements that have been obtained from the sensor. The software also displays a status indicator, which provides an insight on the health of the sensor or the position in which the individual gas zone is in.

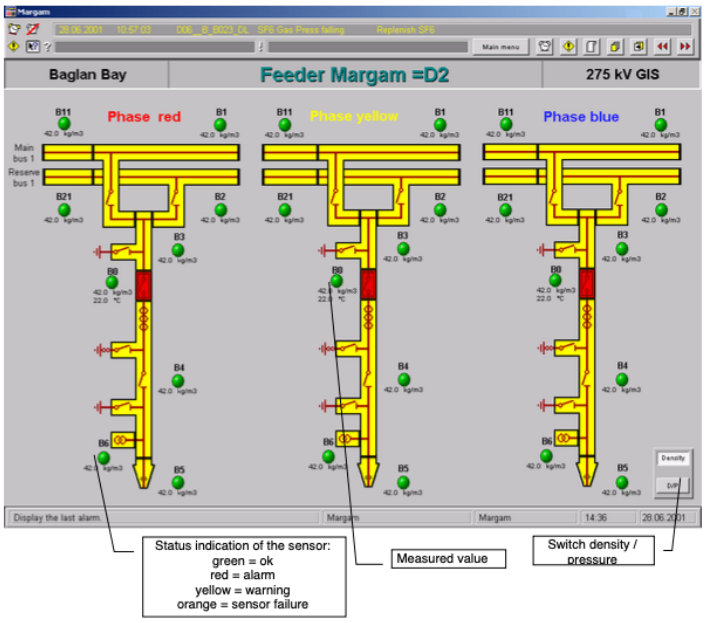

Figure 2: Existing System Software Circuit Overview

Figure 3 demonstrates another part of the software which has another positive aspect. An overview can be displayed of the substation and the individual ciurcuits.

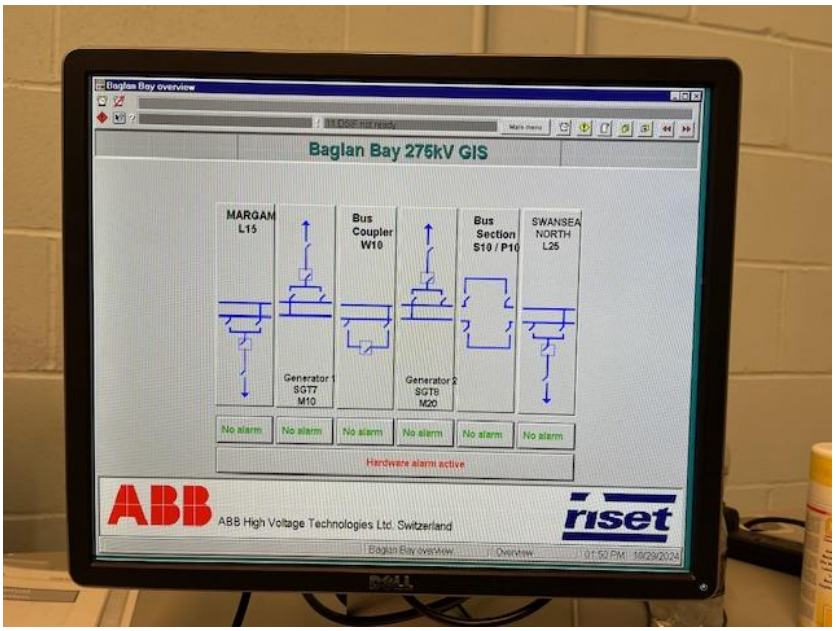

Figure 3: Existing System Software Substation Overview

Figure 4 below illustrates the existing system that is positioned on each of the circuit's associated auxiliary panel, this is where the falling and low alarm is situated on the panel if the gas falls before the threshold, this is also where the DSIF is also installed.

Figure 4: Existing system protection relay signals

No.2 – Qualitrol Design

Quoitrol's SF6 gas monitoring system uses a combination of pressure and density sensors to continuously monitor the SF6 gas levels within the switchgear [3]. The system is built with a robust enclosure that houses the sensors and communication modules [3]. The sensors detect changes in gas density, which can indicate leaks or degradation of the gas quality [3]. The data is transmitted in real-time to a central monitoring system, this then allows for immediate action if gas levels fall below safe thresholds [3].

This system utilises a combination of infrared sensors and pressure transducers to continuously monitor the SF6 gas levels within the switchgear. The infrared sensors detect the concentration of SF6 gas, while the pressure transducers measure the gas pressure, allowing for real-time monitoring of gas integrity [3].

The system is built with robust materials to withstand high voltage environments and includes a user-friendly interface for data visualisation [3]. It is designed to integrate seamlessly with existing switchgear systems, providing alerts for any gas leaks or pressure drops [3]. Figure 5 illustrates the iSGM system a bigger image can be found in Appendix 2.

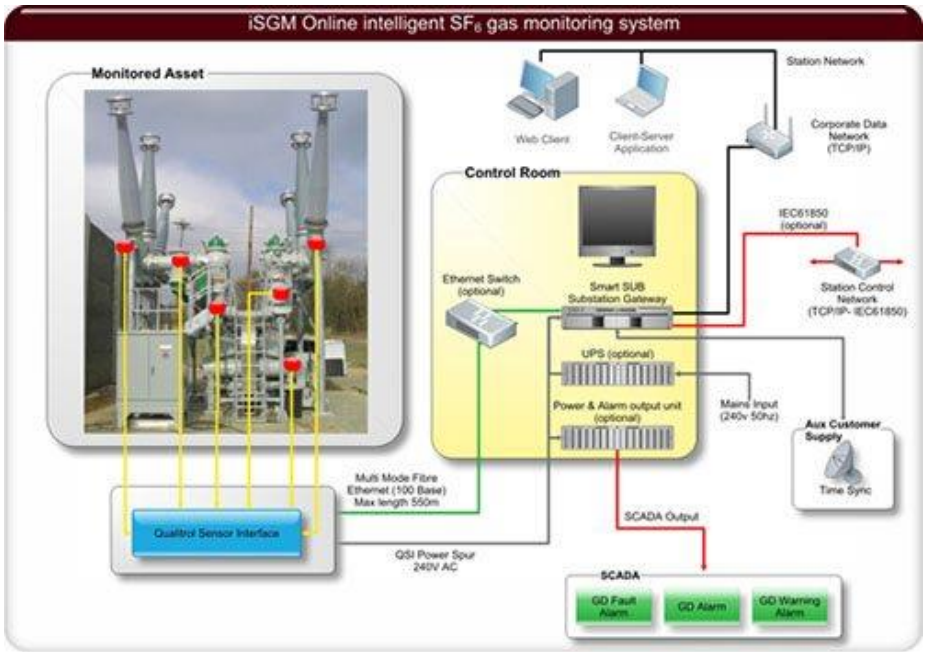

Figure 5: Qualitrol System Diagram [3].

No.3 – Dilo Inc Concept

The SF_6 Leak Pointer is a lightweight, cordless handheld tool used to quickly find SF_6 gas leaks [4]. It has seven sensitivity settings and responds in less than a second, making it great for spotting even small leaks [4]. It's easy to use with one hand and shows results on an LED screen, along with a sound alarm. The device resets itself quickly after detecting a leak and comes in a strong carry case [4]. It runs on two standard C batteries, so there's no need to charge it. It also adjusts for air movement and works well in different temperatures, making it ideal for use out in the field [4]. The DILO SF_6 Leak Pointer is a trusted tool across the electrical, industrial, and manufacturing industries [4].Figure 6 illustrates the physical look on the senor.

Figure 6: Dilo SF6 leak Pointer/Sniffer [3]

2.2. Section 1 – Literature Review

The use of Sulphur Hexafluoride (SF6) gas in high voltage substations, particularly in Gas Insulated Switchgear (GIS), presents unique challenges and opportunities for monitoring and management [1]. This literature review aims to explore the current research surrounding SF6 gas monitoring systems. Each section will highlight key research contributions, methodologies, and findings relevant to the development of effective SF6 monitoring solutions.

2.2.1. Environmental impacts

Sulphur hexafluoride (SF6) is a potent greenhouse gas with a global warming potential (GWP) approximately 23,500 times greater than CO2 over a 100-year period [5]. Its use in electrical insulation and other applications raises significant environmental concerns due to its long atmospheric lifetime and potential for leakage. [5] SF6 is identified in the Kyoto Protocol as a greenhouse gas, with measures being taken to eliminate atmospheric emissions and reduce its use in industry [5].

Analysis of SF6's global warming potential.

The global warming potential of SF6 is a critical factor in assessing its impact on climate change, as its high GWP contributes significantly to the greenhouse effect when released into the atmosphere [6]. According to [7] SF6 is estimated to be between 23,500 - 23,900 times more harmful than CO2 to the environment, meaning that one tonne of SF6 released into the atmosphere is equivalent to releasing 23,500 -23,900 tonnes of CO2 [6]. It has been suggested by [6] that if greenhouse gas emission is not limited, the global average temperature may increase by 4°C or more by 2100 [6].

Effects on climate change and biodiversity.

The release of SF6 into the atmosphere not only intensifies climate change but also poses risks to biodiversity, as altered climate conditions can disrupt ecosystems and

species interactions due to the earths rising temperature. The effects could result in heat absorption which is where the F-gases absorb infrared radiation and re-radiate it back to Earth, which increases the Earth's surface temperature [8]. The increased emissions of F-gases contribute to global warming resulting in rising sea levels and more frequent and severe floods, droughts, and wildfires which impacts biodiversity through habitat loss, disruptions in food chains, and changes in reproduction cycles while also causing water acidification and eco-toxicity which can highly effect ecosystems.

Case studies of SF6 leaks and their environmental consequences

Since SF6 gas have been used for many years in GIS there have been a number of cases where SF6 have been released into the atmosphere, this could be due to many factors such as wear and tear overtime, gas released during the installation, manufacturing defects, improper installation, leakage from maintenance activities when procedures may not be adhered to correctly, releases from equipment failure, end of life disposal of the switchgear and environmental factors such as extreme weather conditions on the switchgear overtime if maintenance and regular check are not conducted properly .

Case Study

On April 1, 2016, Schneider Electric Ltd was fined when an incident occurred when faulty busbars were removed, resulting in the release of up to 15kg of SF6, a potent greenhouse gas [9]. The court found that Schneider Electric did not provide necessary documentation or risk assessments regarding the handling of SF6, and their subcontractor was unaware of the gas's presence during the removal process [9]. The gas was released for 1-2 hours before an employee of Schneider Electric realised what was happening [9]. The company reported the incident to the Environment Agency and Health and Safety Executive and was ordered to pay an additional £18,368 in costs [9].

2.2.2. Regulatory Compliance

Industries using SF6 are subject to various environmental regulations aimed at limiting emissions and promoting responsible usage. These regulations often include specific requirements for monitoring, reporting, leak prevention, and the adoption of alternative substances or technologies. Compliance is essential to mitigate the environmental impact of SF6 and to avoid penalties.

Regulations governing SF6 usage

There are many regulations and governing bodies that regulate the control of SF6 with protocols and regulations. The European Commission reinforced a 2006 F-gas regulation in 2015 with the aim of reducing the EU's F-gas emissions by two-thirds from 2014 to 2030 [10]. The British countries have retained the EU regulation to control the release of SF6 gas since leaving the EU [1]. The targets were set have succeeded in its objective so far to reduce estimated cumulative emissions in Great Britain by 13.6-24.3 MtCO2e. An insight to the standards that were set are as follows:

Broader Emission Reduction Targets: The EU/GB's objectives include limiting the rise in temperature due to climate change to 2°C and cutting overall greenhouse gas emissions by at least 55% in 2030 and up to 95% in 2050, compared to 1990 levels [1].

Prohibitions and Restrictions: Prohibitions limits the placing on the market of certain products and equipment containing F-gases and extends controls to pre-charged equipment. It also bans the use of F-gases in certain applications and sets requirements for leak checks, leakage repairs, and recovery of used gas.

Certification and Training: Requires that all technicians handling F-gases must be trained in their safe use and certified.

Reporting: Sets out the requirement for annual reporting on production, imports, exports, stock use, and destruction.

These will all contribute to reducing the use of SF6 equipment while mitigating the risk of releases of the gas into the atmosphere which will overall help reduce the impact that SF6 has on the atmosphere/ environment.

Compliance requirements for industries using SF6.

There are many compliance regulations that need to be adhered to when using SF6 gas, an explanation on the compliance requirements is explained below:

Leakage Monitoring: Regular monitoring of emissions from equipment that contains significant quantities of Global Warming Potential gases is enforced [11]. This includes bi-annual or quarterly checks, depending on the installed gas mass. They also explain that equipment containing more than 22kg of SF6 must have an automatic leak detection system fitted [7] [11].

Closed Cycle Management: Managing switchgear on a closed cycle is necessary to avoid deliberate gas release into the atmosphere [7], [10].

EU F-Gas Regulation Requirements: Compliance also involves reduced sales of all F-Gases, a ban on F-Gases in new equipment where alternatives are available [1].

Registration: Relevant importers, producers, and undertakings are required to be registered in the F gas system [1].

Proper Handling and Disposal: Adhering to guidelines for the proper handling, maintenance, and disposal (or re-use) of SF6 and switchgear is an essential compliance requirement [7].

These measures are essential for mitigating the environmental impact of SF6 and avoiding penalties.

Penalties for non-compliance and incentives for reduction.

The implementation of the compliance regulation would not be as effective without penalties for non-compliance. By introducing penalties, the regulatory bodies aim to reduce emissions while also offering incentives for reduction in SF6 usage [9]. A few of the penalties and incentives are explained below:

Penalties

Civil Penalties: Releasing or leaking SF6 gas can lead to substantial civil penalties, with fines reaching up to £200,000 for severe breaches [12]. Less serious offences can incur fines up to £100,000, and failures in correctly labelling equipment containing F-gases may result in fines of £50,000 [12].

Enforcement Examples: As previously explained in the case study from [9] breaching compliance can lead to direct fines and additional costs. An example such as Schneider Electric Ltd case, which was fined £18,368 for failing to recover SF6 gas [9].

Incentives for Reduction:

Financial Incentives: Ofgem's RIIO ET2 framework includes financial incentives for transmission networks to reduce SF6 leakage, along with specific funding for major investments and innovation [13]. However, for distribution networks due to the lower levels of SF6 within the distribution networks systems Ofgem did not introduce an equivalent incentive, despite arguments for it [13].

Reputational Approach: Companies facing increasing scrutiny from environmental and other stakeholders can drive them to improve their SF6 management to maintain a positive reputation [11].

Technology Innovation: Another method of applying an incentive to companies to reduce their SF6 usage, an alternative gas would be needed which would have the same capabilities as SF6. Manufacturers and research institutions have collaborated to create alternatives to SF6, resulting in several options now available in the market [1]. However, finding a highly suitable substitute/s have proven to be challenging due to SF6's superior insulating properties, while also aiming for a smaller footprint compared to many alternatives [1]. The effectiveness of different solutions can vary based on whether the equipment operates at medium or high voltage, but this could also cause regulatory complications due each of the gases needing different regulations if their properties are all different.

2.2.3. Leak Detection & Best practices

Detection of SF6 leaks is crucial for reducing emissions and ensuring equipment reliability. There are various methods, from traditional techniques to advanced laser imaging and even using AI, each with its own advantages and limitations. Effective leak detection, coupled with best practices in handling and maintenance, is essential for industries using SF6.

Best practices for minimising SF6 leaks in GIS.

Best practices for minimising SF6 leaks in Gas Insulated Switchgear (GIS) involve a combination of preventative measures, advanced detection methods, and strategic asset management.

Preventative Measures:

Improved Equipment Gas Seals: Using improved gas seals to reduce the release of SF6 into the environment is a crucial part to mitigating the release of SF6 gas. Modern distribution equipment should have a leakage rate of 0.1% for a sealed pressure system [14].

Preventative Coatings: Applying external palliative coatings to outdoor equipment of GIS substations to prevent environmental degradation of SF6 seals [13].

Closed Cycle Management: As explained previously managing switchgear on a closed cycle to avoid deliberate gas release into the atmosphere.

High Quality Manufacturing: Ensuring high-quality manufacturing and installation processes will also help to minimise potential leakage from equipment.

Advanced Detection Methods:

Advanced detection methods are crucial in detecting SF6 leaks, a list of different systems is listed below, and a further explanation of these systems are explained in the next section.

- Regular Monitoring
- Automatic Leak Detection Systems
- Infrared Cameras
- Laser Imaging Technology
- Ultrasonic Detection
- Gas Density Sensors
- Substation Inspection Robots

Strategic Asset Management:

Asset Replacement: Implementing economic and efficient SF6 asset replacement strategies can aid with preventing the system from major SF6 leaks after the equipment has been in service for a number of years [11].

Leak and Replace Policy: WPD have adopted a "leak & replace" policy for 11 kV equipment and a "two leaks & replace" policy for greater than 11kV equipment, this could be applied to possible regulations which would help mitigate the number of SF6 releases [11].

SF6-Free Alternatives: As previously explained since new alternatives are available, companies should invest in SF6-free assets where they are technically feasible and market-ready.

Inventory Management: Tackling inventory, including retro-filling existing equipment with a like-for-like gas with a lower GWP will result in less SF6 releases [13].

Data Analytics: Improving data analytics to understand patterns and causes of leakage, including the relationship trends with temperature changes.

By implementing these best practices along with compliance and training regulations while also using maintenance protocols operators can effectively minimise SF6 leaks in GIS.

Maintenance protocols and monitoring frequency.

Maintenance protocols and monitoring frequency for SF6 gas in GIS are essential for minimising leaks and ensuring reliable operation. These protocols include regular checks, record-keeping, and the use of advanced monitoring technologies. Several key aspects of maintenance protocols and monitoring frequencies are explained below:

- *Leakage Checks:* According to regular monitoring of emissions is required for equipment containing significant quantities of global warming potential (GWP) gases [7]. Equipment containing more than 6kg of SF6 should undergo bi-annual checks, while equipment containing more than 22kg requires checks every three months [7]. 1st January 2017 was the date where the regulation of all new switchgear with more than 22kg of SF6 must have an automatic leak detection system fitted was set [7].

- *Record Keeping:* Operators of equipment requiring leak checks must establish and maintain records of this activity.

Monitoring Technologies:

- Automatic Leak Detection Systems: Larger equipment at high voltage is fitted with automatic leak detection equipment.

- Infrared Cameras: Some distribution networks use infra-red leakage detection to pinpoint leaks.

- Gas Density Sensors: Monitoring gas density through natural frequency readings using a true-gas density monitor.

- Pressure Gauges*:* Using pressure gauges with high and low-pressure alarms will give also provide a solid feedback signal from the gauge since it is mechanically switched in comparison to the other electronical methods.

Maintenance Strategies:

Closed Cycle Concept: Managing switchgear on a closed cycle to avoid deliberate gas release into the atmosphere.

SF6 Recycling: Companies are encouraged to implement SF6 recycling programmes and proper handling procedures [7].

Quick Repairs: Companies are also encouraged to undertake prompt repairs once a leak has been identified.

Table 1: Best practices and alarm strategies

• *Best Practices:*
• *Tightness Guide:* Adhering to tightness guidelines for installing SF6 GIS.
• *Safe Handling:* Following practical SF6 handling instructions.
• *Alarm Systems:*
• *Pressure Alarms:* Configuring high- and low-pressure alarms to aid with safe operation of the system and to protect personnel.
• *Moisture Detection:* Monitoring moisture to prevent hazardous by-products which can degrade the metal within the GIS and cause more leaks, while moisture can also reduce insulation properties which can result in arcing causing faults.

2.2.4. Role of AI technology and intelligent detection systems in leak prevention

AI technology and intelligent detection systems play a crucial role in SF6 leak prevention by enabling more accurate and efficient leak detection, prediction, and management.

AI and Machine Learning Applications:

Predictive Analytics: AI algorithms analyse data to identify leak patterns and predict future leakage rates, enabling proactive interventions on high-risk equipment [15].

Yolov4 Algorithm: In [16] the group explain a type of algorithm that has been experimented for infrared SF6 leak detection. The system operates by processing infrared images to identify leaks. The main network consists of several key components:

CSPDarknet53: A backbone network that extracts features from the input image [16].

SPP module: This module enhances the system's ability to capture features at different scales [16].

PANet module: Helps improve the flow of information between different layers, aiding in better detection [16].

Yolo Head module: This module generates the final predictions about the location and presence of leaks.

The systems accuracy is aided by using the Mish activation function and optimising it with the CIoU function [16]. The Mish activation function is a mathematical function used in neural networks to help them learn better [16]. It takes an input value and produces an output that is smooth and can be both positive and negative [16]. This helps the network understand complex patterns and improves its performance. [16]

Intelligent Detection Systems:

Customised Binocular Imaging (CBI) System: This system enhances detection accuracy using two filters to reduce background and system noise [17]. It uses a difference method on two infrared images to observe SF6 gas leaks with high accuracy [17]..

Substation Inspection Robots: These robots are equipped with various detection instruments to perform remote inspections, including SF6 gas leak detection [15].

Laser Imaging Technology: Laser imaging technology enables long-distance live detection of SF6 gas leaks and visualises them as dynamic cloud smoke on a video display, ensuring personnel safety by allowing remote inspection [18].

Ultrasonic Detection: Multi-sensor ultrasonic detection systems use data combining techniques to enhance the accuracy and reliability of leak detection and has been researched and tested by [19]. The ultrasonic detection system operates by combining data from different sensors which can then be used in conjunction with multi-sensor systems [19]. The results confirmed that the system has good advantages such as small in size, easy to install, high sensitivity, good stability and it is beneficial as with its ability for dynamic on line detection, however the research evaluation describes some disadvantages which could potentially effect the system on the field such as distance from the equipment while also if the system was placed outside weather conditions could affect results [19].

Benefits of Integrating AI and Intelligent Detection Systems

Greater emphasis on monitoring and digitalisation opens opportunities for AI and other tools to predict and better manage leakage. Table 2 Illustrates the benefits of adopting AI detection.

Table 2: Benefits of AI Detection

Benefits:
• *Enhanced Accuracy:* The benefits of the Intelligent detection methods such as Yolov4 algorithm and CBI systems, offer higher accuracy compared to traditional methods [14].
• *Real-Time Monitoring:* Gas density sensors and real-time data analysis enable continuous monitoring of SF6 levels, ensuring prompt detection of leaks [15].
• *Remote and Safe Detection:* Technologies like laser imaging and inspection robots allow for remote detection, reducing the risk of electric shock to personnel [15].
• *Efficient Maintenance:* Predictive analytics help identify potential issues early, allowing for timely and efficient maintenance.
• *Improved Environmental Protection:* By detecting and preventing leaks, these systems help reduce SF6 emissions, mitigating their impact on global warming.

2.2.5. Sustainable Alternatives to SF6 Gas

As discussed, due to the high global warming potential (GWP) and long atmospheric lifetime of SF6, finding sustainable alternatives is a critical focus. SF6 is used in GIS because of its insulation and arc-quenching properties. The power industry is actively seeking replacements to minimise carbon emissions.

Overview of alternative gases and technologies.

Several alternative gases and technologies have emerged as potential replacements for SF6:

Fluoronitriles (C4F7N): C4F7N has good dielectric strength and lower GWP compared to SF6 [1]. A mixture of C3F7CN and CO2 has comparable breakdown performance to SF6 [1].

Fluoroketones (C5F10O): Fluoronitriles, *C5F10O* offers good dielectric strength and lower GWP in comparison to SF6 [1].

Hydrofluoroolefins (HFOs): HFO1234zee is a potential alternative for medium voltage switchgear, with a low GWP [14]. However, it may be flammable and unsuitable for current interruption [14].

Synthetic Air: Nuventura a GIS manufacturer uses synthetic air as an alternative insulating medium while maintaining design compactness in MV equipment [14].

Natural Gases: Gases like CO2 and N2 are being explored, often in mixtures [14] , [12]. These typically require higher pressures or larger equipment footprints to match SF6's performance. Toshiba is considering its Aeroxia range (natural origin gas) for export [14] , [12].

Benefits and challenges of transitioning to alternatives.

Table 3 and Table 4 present the benefits and challenges associated with adopting alternative gases to SF6.

Table 3: Benefits of Alternative Gases

Benefits:
• *Reduced Environmental Impact:* Alternative gases generally have a significantly lower global warming potential (GWP) compared to SF6. For example, CF3I has a GWP of less than 5, compared to SF6's 23,500 [11].
• *Compliance with Regulations:* Transitioning to alternatives helps comply with increasingly stringent environmental regulations and policies aimed at reducing SF6 emissions [13].
• *Market Advantage:* Early adoption of sustainable alternatives can provide a competitive advantage as environmental concerns and regulations drive market demand [13].
• *Reduced SF6 Emissions:* The primary aim is to reduce the release of SF6 into the atmosphere.

Table 4: Challenges of adopting alternative gases

Challenges:
• *Technical Feasibility:* Finding alternatives that match SF6's performance in terms of dielectric strength, arc-quenching capability, and thermal stability is challenging for higher voltage equipment [13].
• *Cost-Effectiveness:* The cost of alternative equipment can be higher, especially at lower voltage levels. Replacing SF6 assets with non-SF6 alternatives becomes less cost-effective with decreasing voltage level [12].
• *Toxicity and Safety:* Some alternative gases may have toxicity concerns or produce hazardous by-products, requiring careful handling and even more safety measures [9].
• *Long-Term Performance:* Long-term performance data and field testing are needed to ensure the reliability and durability of alternative gases and equipment due to the time it would have spent in the industry [11].
• *Retrofitting:* Existing SF6 switchgear may not be directly compatible with alternative gases, requiring significant design modifications or complete replacements [11].
• *Physical Space:* Some alternatives like air-insulated solutions require more space than current switchgear technology resulting in a need for a larger footprint of the substation [13].
• *Use of F gases:* Some alternatives still require the use of F gases [11].
• *Smaller Footprint:* Alternatives may not have the same insulating characteristics as SF6 [13].

Case studies of successful implementations.

Sellindge Substation in Kent, UK: [14] A 400 kV substation has been commissioned using a new "green gas for grid (g3)" as an alternative to SF6.

400 kV Gas-Insulated Line (GIL) Demonstrator at Cardiff University: [14]This is where they are trialling new alternative environmentally friendly gases.

Demonstration Sites: [20] National Grid Electricity Transmission network operators are setting up demonstration sites to find solutions to replace SF6.

Nuventura Synthetic Air: [12] Pilot testing is being conducted by an unnamed DNO in Germany.

ABB AirPlus: AirPlus is currently under test in live networks and has been tested according to IEC specifications for medium voltage applications [7].

GE g3: g3 has been tested for breaking capability up to 420kV with similar dimensions and operating energy to SF6 equipment [7].

National grid are currently undertaking a project in which consists of their first SF_6-free EconiQ GIS which is a design from Hitachi [21], [22] states that their system uses a mixture of CO2, Oxygen and small amounts of fluoronitrile (C4-FN) which has a significantly lower life cycle than SF6..

These implementations and trials demonstrate the increasing viability and adoption of SF6 alternatives in the power industry.

2.2.6. Impact on Cooperate responsibility and sustainability

How SF6 monitoring aligns with corporate sustainability goals.

SF6 monitoring is crucial for aligning with corporate sustainability goals due to the gas's significant environmental impact. Its inclusion in the Kyoto Protocol underscores the necessity for industries to manage and reduce its emissions, below is a list of cooperate sustainability goals:

- *Environmental Responsibility*: Monitoring SF6 helps companies reduce their carbon footprint and environmental impact, aligning with sustainability objectives.

- *Regulatory Compliance:* As previously explained compliance with environmental regulations careful monitoring and reporting of SF6 emissions.

- *Risk Management:* Effective monitoring helps in identifying and mitigating risks associated with SF6 leakage, ensuring reliable switchgear operation and preventing environmental damage.

- *Science-Based Targets:* Science-based targets require companies to have separate targets for scope 1 and scope 2 emissions, with SF6 accounting for a large percentage of scope 1 emissions for transmission [23].

2.2.7. Strategies for reporting and transparency in emissions data.

Effective reporting and transparency in emissions data are essential for demonstrating corporate responsibility and ensuring accountability. A few strategies are listed below:

- *Comprehensive Reporting Systems:* Develop systems to report on total SF6 inventory and leakage reduction rates, using standardised methodologies for consistent comparison across different entities.

- *Annual Environmental Reports:* Produce annual reports detailing progress against environmental action plans, including SF6 strategies.

- *Regular Audits:* Conduct regular audits of SF6-containing equipment to identify and address leaks promptly.

- *Data Analytics:* Use data analytics to gain a better understanding of SF6 assets and improve the accuracy of emissions reporting.

- Supply Chain Transparency: Report on overall releases and assess alternatives to SF6.

- *Consistent Metrics:* [11] suggests that using the latest IPCC figure to avoid under-reporting is a way companies can compare and report their figures for gas releases.

2.2.8. Stakeholder engagement and public awareness initiatives.

Engaging stakeholders and raising public awareness are crucial for fostering trust and support for corporate sustainability efforts.

- *Stakeholder Involvement:* Engagement with a variety of groups within research such as stakeholders, including regulators, customers, and environmental groups, to gather

feedback and address concerns related to SF6 emissions, this could be a beneficial method for companies to use [1].

- *Public Awareness Campaigns:* [24] suggests that launching public awareness campaigns to educate communities about the environmental impact of SF6 and the measures being taken to mitigate it could benefit companies with involvement of stakeholders and the public.

- *Collaboration:* Work with industry peers, research institutions, and manufacturers to develop and promote sustainable alternatives to SF6.

- *Transparency in Communication:* Communicate openly about SF6 emissions data, reduction targets, and progress made in achieving those targets.

- *Community Engagement:* Engage with local communities to address concerns and promote environmental stewardship.

- *Training and Education:* Provide training and education to employees and contractors on proper SF6 handling and leak prevention practices.

- *Financial Incentives:* Use financial incentives for SF6 strategies, development of DNO SF6 strategies and acting on inventory.

- *Transparency:* Stakeholders can track progress by companies regularly updating the networks that publish different reports which touch on SF6.

3. Section 2 – Work being undertaken and How (Development Methodology)

3.1. System Requirements

3.1.1. Identification of functional and non-functional requirements for the SF6 monitoring system.

Table 5 and Table 6 present the functional and non-functional requirements for the design.

Table 5: Functional requirements of the design

Functional Requirements:
• *Real-time Monitoring:* The system must continuously monitor SF6 gas levels and provide real-time data to operators.
• *Data Logging:* The ability to log historical data for analysis and reporting purposes.
• *Alarms and Notifications:* The system should generate alerts for gas leaks or abnormal pressure levels.
• *Integration Capability:* The monitoring system must integrate with existing grid management systems for seamless data exchange.
• *User Interface:* A user-friendly interface for operators to access data and configure settings.

Table 6: Non-functional requirements of the design

Non-Functional Requirements:
• *Reliability:* The system should have high availability and minimal downtime.
• *Scalability:* It must be able to accommodate future expansions in monitoring capabilities.
• *Security:* The system should implement robust security measures to protect data integrity and prevent unauthorized access.
• *Compliance:* The system must adhere to relevant industry standards and regulations regarding SF6 monitoring and reporting.

3.1.2. Analysis of stakeholder needs and expectations.

Analysis of this project will need to be undertaken in a number of ways, this will be due to the compliance regulations and standards that will need to be met to align with national grids standards, the project will also need to meet specification to ensure the design complies in regard to practicality of maintaining the system and ensure environmental compliance is achieved.

- NGET Companies: Ensure accurate and timely data to ensure the reliability of the electricity transmission network and to comply with regulatory & NGET requirements.
- Regulatory Bodies: Compliance to environmental regulations concerning SF6 emissions and reporting standards.
- Maintenance Teams: Easy access to monitoring data to facilitate timely maintenance and reduce operational costs will be a necessity.
- Environmental Groups: Search for transparency in emissions data and adhere to sustainability practices.

3.1.3. Documentation of technical specifications

The following explains the type of documents that include technical specifications that the project will need comply with:

System Architecture: Detailed diagrams illustrating the system components, data flow, and integration points with existing infrastructure.

Communication Protocols: Specifications for data transmission methods (e.g., MQTT, Modbus) to ensure compatibility with other systems.

Performance Metrics: Defined benchmarks for system performance, including response times and data accuracy.

Compliance Standards: Documentation of relevant standards that the system must meet.

3.2. Data collection methods

Description of the methods used for data collection

Surveys: Surveys among operators and maintenance personnel to gather insights on the current system's performance, usability, and areas for improvement.

Interviews: In-depth interviews with key stakeholders, including utility managers, environmental compliance officers, and technical staff such as commissioning engineers, to understand their specific needs and expectations from the upgraded monitoring system. Verbal discussions and stakeholder meetings were held within the substation over Microsoft teams

Field Measurements: Use field measurements to collect real-time data on SF6 levels, pressure, and temperature from existing monitoring equipment. This data can help identify trends and anomalies in the current system's performance.

Selection criteria for participants or data sources.

Table 7 presents the criteria selection for data.

Table 7: Criteria selection

Relevance: Experience with the existing SF6 monitoring system, including operators, maintenance staff, and management personnel.
Expertise: Individuals with technical expertise in SF6 management, environmental compliance, and grid operations to ensure informed feedback is valuable.
Diversity: Include a diverse range of stakeholders to capture various perspectives, including those from different departments (e.g., operations, maintenance, compliance).
Availability: Ensure that selected participants are available for interviews or surveys within the project timeline to facilitate timely data collection.

Tools and technologies needed for data collection

Sensors: Install new ones capable of accurately measuring SF6 levels, pressure, and temperature.

Data Acquisition Systems: Implement data acquisition systems that can collect and transmit data from sensors to a central monitoring platform for analysis.

Software Solutions: Use software tools for data analysis and visualisation, such as SCADA (Supervisory Control and Data Acquisition) systems, which can integrate with the upgraded monitoring system.

3.3. Design methodology

3.3.1. Explanation of the design approach used.

Systems Engineering: The design approach for upgrading the SF6 monitoring system follows systems engineering methodology. This approach emphasises a complete view of the system, ensuring that all components work together effectively. It involves defining requirements, analysing system performance, and integrating various subsystems to achieve optimal functionality [25].

User-Centred Design: This involves actively engaging end-users throughout the design process to ensure that the system meets their needs and enhances usability. User feedback will be gathered through surveys, interviews, and usability testing to inform design decisions.

Key design principles and considerations for the monitoring system.

Modularity: The system should be designed in a modular fashion, allowing for easy upgrades and maintenance of individual components without disrupting the entire system.

Scalability: The design must accommodate future expansions, enabling the addition of new sensors or functionalities as the needs of the national grid evolve.

Interoperability: Ensure that the upgraded system can seamlessly integrate with existing grid management systems and other monitoring technologies, facilitating data sharing and communication.

Reliability and Redundancy: The system should be designed for high reliability, incorporating redundancy measures to ensure continuous operation and data availability, even in the event of component failures.

User-Friendly Interface: A focus on creating an user interface that allows operators to easily access data, configure settings, and respond to alerts will enhance operational efficiency.

Compliance with Standards: The design must adhere to relevant national and international standards for SF6 monitoring and environmental regulations, ensuring compliance and minimizing environmental impact.

Stakeholder involvement in the design process (design review meetings etc)

Design Review Meetings: Regular design review meetings will be scheduled with key stakeholders, including NGET managers, technical staff, and design representatives. These meetings will provide a platform for discussing design progress, gathering feedback, and addressing any concerns.

Workshops and Focus Groups: Conduct workshops and focus groups with stakeholders to collaboratively explore design concepts, validate requirements, and prioritise features based on user needs and operational goals.

Prototyping and Testing: Involve stakeholders in the prototyping phase by allowing them to test early versions of the monitoring system.

Continuous Feedback Loop: Establish a continuous feedback loop throughout the design process, encouraging stakeholders to provide input at various stages. This will help ensure that the final product aligns with their expectations and operational needs.

3.1. Implementation Methodology

3.1.1. Outline of the overall implementation strategy.

The implementation strategy for upgrading the existing SF6 monitoring system will follow a structured approach that includes collaboration, risk management, and adherence to timelines. The strategy will include the following key components:

Stakeholder Engagement: Continuous involvement of stakeholders throughout the implementation process to ensure alignment with their needs and expectations.

Simulation and Prototype Testing: Implement a software version to prove the concept works, once validated a prototype can be built commissioned and tested to ensure the physical concept also aligns with stakeholder's needs and regulations before the final design is complete.

Phased Rollout: Implement the upgrade in phases to minimise disruption to existing operations, allowing for testing and validation at each stage.

Training and Support: Provide comprehensive training for users and technical staff to ensure they are equipped to operate and maintain the upgraded system effectively.

Documentation: Maintain thorough documentation of the implementation process, including design specifications, user manuals, and maintenance guidelines.

3.1.2. Key phases of the implementation process.

- *Planning Phase:*
  - Define project scope, objectives, and timelines.
  - Identify resources required, including personnel, technology, and budget.
  - Develop a risk management plan to address potential challenges.
  - Develop a software based
- *Execution Phase:*
  - Install and configure new hardware and software components.
  - Conduct system integration commissioning and testing to ensure compatibility with existing infrastructure.
  - Implement user training sessions to familiarise stakeholders with the upgraded system.
- *Monitoring Phase:*
  - Establish performance metrics to evaluate the system's effectiveness post-implementation.
  - Conduct regular check-ins with stakeholders to gather feedback and address any issues.
  - Adjust the system as necessary based on performance data and user input.

3.2. Limitations

3.2.1. Identification of potential limitations in the research and implementation methodology.

Resource Constraints: Limited availability of budget, personnel, or technology may hinder the implementation process.

Stakeholder Resistance: Potential resistance from users accustomed to the existing system may affect the adoption of the new monitoring system.

Data Quality Issues: Inaccurate or incomplete data collected during the research phase may impact the design and effectiveness of the upgrade.

3.2.2. Discussion of factors that may affect the validity and reliability of the findings.

Sample Bias: If the stakeholder sample is not representative of the broader user base, findings may not accurately reflect the needs and expectations of all users.

External Influences: Changes in regulatory requirements or technological advancements during the implementation process may affect the relevance of the findings.

Data Collection Methods: Variability in data collection methods (e.g., surveys vs. interviews) may introduce inconsistencies in the data.

3.2.3. Suggestions for mitigating these limitations in future research

Stakeholder Engagement: Involve a diverse range of stakeholders in the research phase to ensure a descriptive sample and gather a wide amount of insights.

FAT Testing: Conduct FAT tests of the upgraded system in controlled environments to identify potential issues before full-scale implementation.

Continuous Feedback Mechanism: Establish a feedback loop during and after implementation to address concerns and adapt the system based on user experiences for future installations.

3.3. Data Analysis Techniques

- *Reliability Testing:* Conduct reliability tests on survey instruments to ensure consistency in responses.
- *Peer Review:* Engage experts in the field to review the data analysis process and findings, providing an additional layer of validation and ensuring methodological rigor.

In summary, the literature on SF6 gas monitoring systems in high-voltage GIS substations highlights a wide approach to tackling the challenges linked to SF6 use. Advances in sensor technology, increasing awareness of environmental concerns, and the integration of data analytics and machine learning all play a key role in developing effective monitoring solutions.

4. Section 3 – Design and Implementation

4.1. Sensor Selection

4.1.1. Overview of Existing Sensor

The existing sensor has the following properties [26]:

- Measurement method: Oscillating Quartz Measurement
- Measuring range: 0...60 kg SF6 /m3 10 ... 253 Hz
- Output: Digital – Current Pulses onto supply current
- Accuracy - ±1% of measured value & and ±1% of range

Figure 7 and Figure 8 show the existing sensor.

Figure 7: Existing sensor

Figure 8: Existing Sensor installed on site

Figure 9 illustrates the linear pulse width of the existing sensor in regard to temperature.

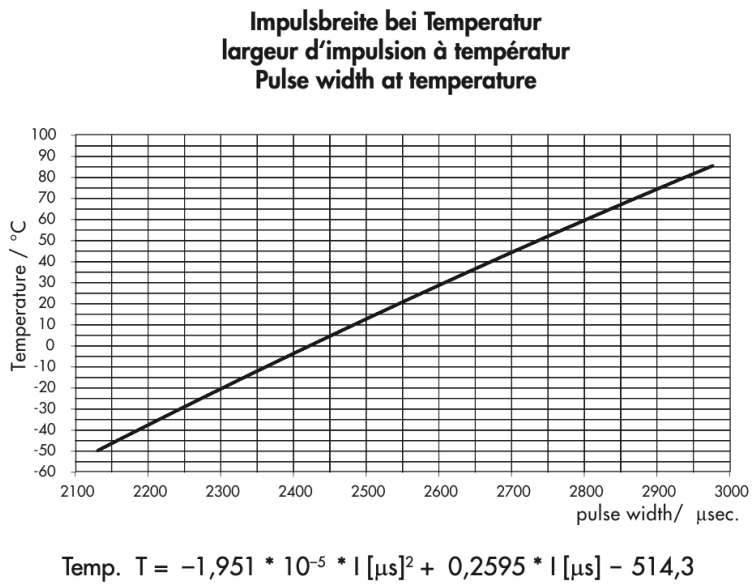

Figure 9: Existing sensors Pulse width in correlation to Temperature

4.1.2. Sensor Specification

The sensor selection will need to conform with the specifications below shown in Table 8 and Table 9. Two types of sensors will be needed for the GDMS due to the switchgear and circuit breaker having different pressure levels of SF6 gas within them, resulting in different alarm thresholds.

Table 8: Gauge Type 1 (Switchgear)

Connection (DN8/DN20/Other) (existing gas fill point)	DN20
First stage alarm threshold (Falling alarm) Bar.g at 20°C	560 kPa (34.9kg/m^3)
Second Stage alarm threshold (Low alarm) Bar.g at 20°C	540 kPa (36.3kg/m^3)

Table 9: Gauge Type 2 Circuit Breaker

Connection (DN8/DN20/Other) (existing gas fill point)	DN20
First stage alarm threshold (Falling alarm) Bar.g at 20°C	620 kPa (40.4kg/m^3)
Second Stage alarm threshold (Low alarm) Bar.g at 20°C	600 kPa (39.2kg/m^3)

Table 10 presents the number total number of sensors needed at site.

Table 10: Number of Sensors needed at Site

Bay Number & Name	Number Of Sensors
D2 - Maragm	27
D3 – EX Generator 1	27
D4 – Bus Coupler	21
D5 – EX Generator 2	27
D6 – Bus Section	42
D7 – Swansea North	27
Total Number of Sensors	171

4.1.3. Potential Sensor's

Table 11 compares the potential sensor selection for the design.

Table 11: Sensor Comparison

	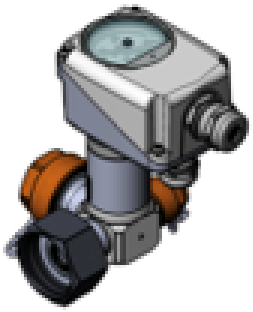		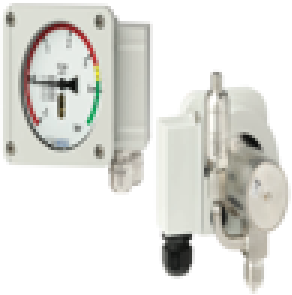
Reference	[25]	[26]	[27]
Manufacturer	Trafag	Lanso Instruments	Wika
Model	C40149	ZMJ60XD	GDM-RC-100-T
Measuring Principle:	○ Monitor: Absolute pressure reference gas measuring system ○ Sensor: Oscillating quartz	○ Bellow	○ Bellows measuring system with reference chamber, piezo pressure sensor with temperature compensation
Measuring Range:	○ Monitor: 0 ...1250 kPa abs. @ 20°C ○ Sensor: 0 ... 56.1 kg/m3 ○ 0 ... 1250 kPa abs. @ 20°C	○ -0.1 ~ 0.9MPa	○ 0 ...10 bar abs.at 20 °C [0 ...145.03 psi abs.at 68 °F] SF6 gas ○ 0 ...12.5 bar abs.at 20 °C [0 ...181.29 psi abs.at 68 °F] SF6 gas
Output Signal:	○ 6.5 ... 20 mA	N/A	○ 4-20mA

Ambient Temperature:	○ -40°C ... +80°C	○ -20°C to+60°C, relative humidity ≤ 95%RH	○ -40 ... +80 °C [-40 ... +176 °F], gaseous phase
Accuracy	○ ± 1.0 % FS typ. ○ ± 1.8 % FS max.	○ Within the range of the dial ±10 KPa @20°C ±1°C	○ ± 1.0 % @ 20°C ○ ± 0.2 % @ 20°C
IP Rating	○ IP67	○ IP65	○ IP67

4.1.4. Proposed Sensor

The Trafag C40149 is a more suitable choice for SF_6 gas monitoring in high-voltage switchgear due to its reliable oscillating quartz sensor, which offers high accuracy and long-term stability. It operates in a wide temperature range and provides both gas density and pressure measurements, giving more comprehensive monitoring than pressure-only models. Its 6.5–20 mA output is easily integrated into standard PLC systems. Another positive aspect that sets it apart from the other sensors is the built-in sampling and topping-up valves on the sensor itself, which make maintenance quicker, safer, and more efficient without needing to remove the sensor or shut down the system.

Figure 10: Chosen Sensor - Trafag C40149

Figure 11 illustrates the Trafag sensor types and threshold values suitable for the design.

C40148 - Sensor type compatible with switchgear sensors specification/thresholds.

C40149 - Sensor type compatible with circuit breaker Specification/thresholds.

Specification : National Grid			
customer reference	T155-2	tbd	tbd
typencode	878x.20.20L1.??.11.60.61.66.U1.VH		
dial	C36022	C40148	C40149
Gas	SF6	SF6	SF6
rated pressure	7.5 bar G @ 20°C	680 kPa abs. @ 20°C	620 kPa abs. @ 20°C
switchpoint 1	6.8 bar G @20°C decreasing	620 kPa abs. @ 20°C decreasing	560 kPa abs. @ 20°C decreasing
switchpoint 2	6.5 bar G @20°C decreasing	600 kPa abs. @ 20°C decreasing	540 kPa abs. @ 20°C decreasing
switchpoint 3	-	600 kPa abs. @ 20°C decreasing	-

Figure 11 : Trafag C40149 Specification

Figure 12 presents the electrical connections to the Trafag sensor.

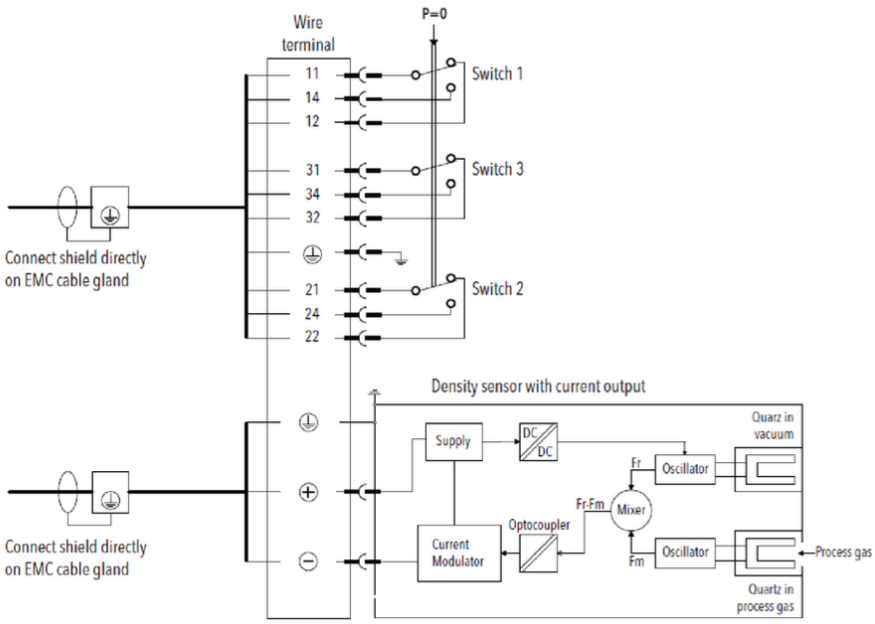

Figure 12: Trafag C40149 Sensor Drawing

4.2. System Architecture

4.2.1. Overview of Existing Architecture

The Existing Gas Monitoring System (GMS) employs a distributed architecture for the supply and analysis of gas density sensors in high voltage switching stations. The system fundamentally comprises a visualisation component and one or more basic equipment units called DSIFs (Density Sensor Interfaces), which are interconnected via a redundant optical bus. [2]

A breakdown of the architecture:

Density Sensor Interface (DSIF): Each DSIF unit can connect to up to 24 gas density sensors. For each connected sensor, a converter module (WAN) must be installed within the DSIF. The DSIF provides the necessary operating voltage to the connected sensors [2].

It analyses the measured data received from the sensors. The sensors transmit measured values as current pulses with a frequency dependent on the measured value, and the DSIF calculates the density and temperature from these pulses [2].

The DSIF allows for the configuration of warning and alarm limit values for each sensor. It continuously compares the measured values against these limits [2].

The DSIF is equipped with six relays that can be configured to signal when measured values fall below the set limits or to indicate sensor failures. Relay 6 can also be used for system monitoring, indicating DSIF faults or a lack of MODBUS communication. [2]

It also features a MODBUS interface for communication with the visualisation system. This interface can be accessed via an OPTO MODBUS communication card [2].

Redundant Optical Bus: The DSIFs are interconnected using fibre-optic cables in a redundant ring topology. There are two independent rings, Ring A and Ring B, running contrary to each other for optimal fault tolerance. This design ensures continuous data communication even if a connection in one ring fails or a DSIF unit malfunctions [2].

Visualisation System (CITECT): This component serves as the Human Machine Interface (HMI) for the system operator. It provides a colour graphic representation of all significant data from the density sensors, offering a clear and rapid overview of the system's status [2].

CITECT organises its functions into separate tasks, including an I/O Task for communication with control devices (like the DSIFs), an Alarm Task, a Report Task, a Trend Task, and a Display Task.

Communication between the visualisation system and the DSIFs uses the MODBUS protocol via the redundant optical bus and the OPTO communication card [2]..

The visualisation system provides features such as alarming for equipment errors or alarm conditions, reports on system data, and trends for monitoring process variables over time.

Figure 13 illustrates the existing system data configuration.

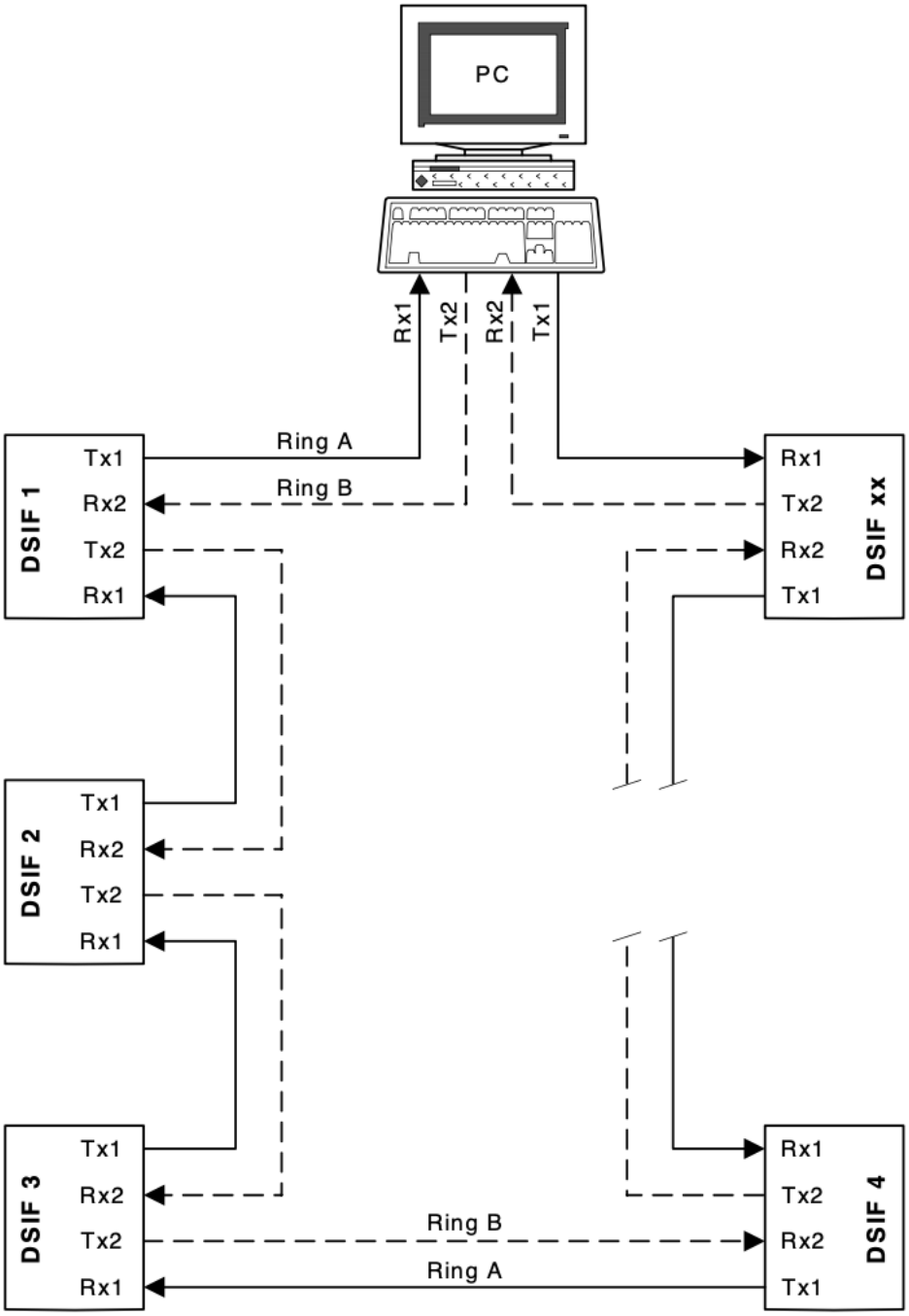

Figure 13: Existing System Configuration

4.2.2. Proposed Architecture

The diagram below shows the proposed system architecture. The current GMS software is outdated, using RS232 communication, fibre-optic rings, and older SCADA platforms like CITECT for Windows NT, which are no longer supported. This makes the system hard to maintain, difficult to scale, and not well suited for integration with modern substation equipment. In comparison, Schneider Electric's EcoStruxure Automation Expert offers a much more up-to-date, flexible, and secure solution. It's built around the IEC 61499 standard and supports distributed control, real-time data monitoring, and cloud connectivity. The platform also allows for easier configuration using graphical tools, remote diagnostics, and smoother integration with today's PLCs, HMIs, and SCADA systems. It also has built-in cybersecurity features, support for predictive maintenance, and improved visualisation, EcoStruxure is a future-proof choice and a clear upgrade over the existing GMS setup. [27]

The system would comprise of a network switch, field device and HMI per area. This would give local indication at each designated area, and the whole system would be covered by an overarching Supervisory PC Based system. Each local area would be built in a modular style giving the ease of expansion and rollout to following Zones [27].

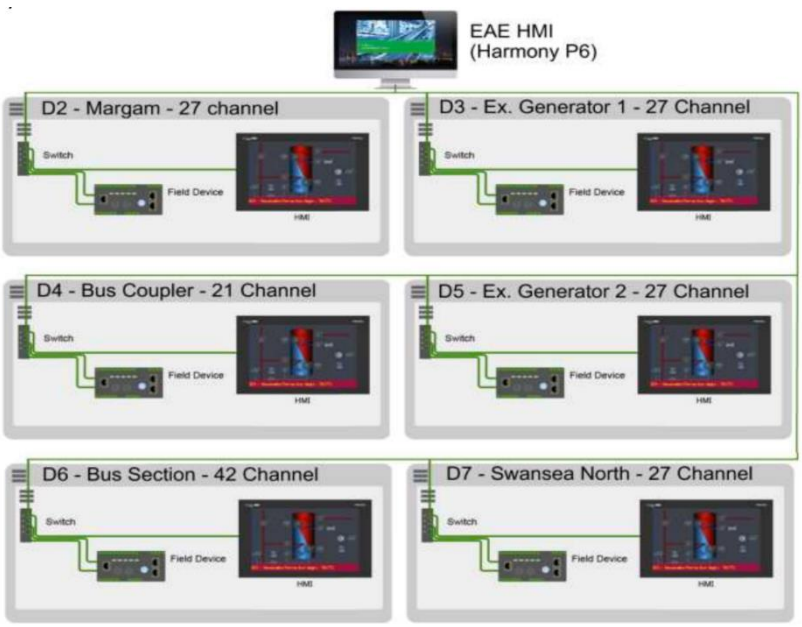

Figure 14: Proposed Schneider Ecostruxture Architecture

4.2.3. Description of hardware and software components with Cost

Table 12 presents the hardware and software components chosen for the system. The components are all related to the Eco-Struxure architecture which assists in ease of compatibility.

Table 12:Hardware and software components

Part No	Description	QTY	Price Each (£)	Price Total (£)	Reference
TM251MDESE	Modicon M251 dPAC	6	325.38	1,952.28	[28]
TM3AI8	Modicon TM3 - 8 analogue inputs (screw) 24Vdc	25	236.36	5,909	[29]
EALAMP	M251 dPAC Runtime	6	252.15	1,512.9	[30]
HMISTM6400	EAE HMI Panel				
EALH1P	license, EcoStruxure Automation Expert, run time, HMI, permanent, 1 user, for Harmony ST6	6	106.56	639.36	[31]
EALH2P	(Linux OS/ Windows 10 Runtime)	1	511.68	511.68	[32]
MCSESM063F2CU0	network switch, Modicon Networking, managed, 4	7	776.60	5,436.2	[33]

	ports for 8 copper with 2 ports for fibre optic, multimode				
BD772010	Dell Inspiron 27 All-in-one	1	748.99	748.99	[34]
VW3E3001R100	Patch Cables (Copper)	16	58.84	941.44	[35]
	Power supply + Wiring Accessories	7	Supplied from Kisok	Supplied from Kisok	N/A
	Fibre Patch Leads	16	114.66	1834.66	[36]
HMIP65EDMN47BN4N00	Harmony P6 Custom Build for Main HMI	1	1,070.80	1,070.80	[37]
Total Cost:				20,557.31	

4.2.4. Integration on monitoring technology with existing infrastructure

The integration of the new SF_6 monitoring system will need to be carried out in carefully planned stages, as the existing system is still live and in continuous operation. To avoid disruption, the initial work will involve installing the new sensors, running cabling, and fitting the new marshalling boxes. Wiring can also be completed up to the new terminal rails within each circuit's kiosk. However, the final connections linking the new system into the existing infrastructure (SCS & TNCC Feedback) must be left until the system is ready for commissioning. This staged approach ensures that the live system remains fully functional throughout the upgrade process, with the switchover to the new setup only occurring once all components have been tested and are ready for seamless integration.

4.3. Additional Materials/ Information on the Installation

4.3.1. Cable selection

The cable specification is determined by the electrical characteristics, environmental factors, and cost considerations of the installation. Due to the nature of the installation, compliance with the following considerations taken into account shown in Table 13:

Table 13: Cable Specification requirements

Voltage Rating:	500V – to ensure the cable can withstand higher voltage in the case of induced voltage from nearby high voltage equipment.
Temperature rating:	Operating range of -25 °C to +90°C to withstand harsh temperatures during seasons.
Mechanical strength:	Double insulated to protect against any mechanical impact.
Flame Retardant:	To ensure the spread of fire is minimised and to abide by IEC- 60332 [39]
Screened cores:	To protect the analogue signals from electromagnetic interference.
Halogen Free:	To ensure the cables release minimal toxic fumes in the event of a fire.

The cable shown in Figure 15 illustrates the chosen cable for the installation from Kabeltec [28], the cable met the requirements for the installation. The decision of using two cables for each sensor provides protection from the mechanical signals to the electronic sensors cables from interference. Although the cores could have been screened in pairs within one cable the cost comparison along with the specification and glanding requirements into the sensor provided difficulty in providing a suitable cable. The decision of two 5 core cables for each sensor was made with the cable being for Kabeltec [28].

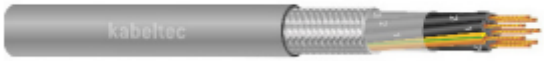

Figure 15: Flex-CH cable from Kabeltec [38]

4.3.2. Cable support system

The cable support system for the SF_6 gas monitoring installation is designed to ensure reliability, protection, and ease of maintenance throughout all routing stages. From the sensor to the marshalling box, cables will be secured using cable ties directly to the GIS structure, following the path of existing control and instrumentation wiring. This approach ensures minimal disruption while making efficient use of the existing infrastructure. For added mechanical protection and organisation, capped metal tray work will also be used along this section. From the marshalling boxes, cables will then run underground within closed trenches, providing environmental protection as they route towards the local control panels. Finally, cables from the local panels will be routed to the control room via protected underground routes, where they will connect to the EAE Harmony P6 HMI, allowing operators to monitor and interact with the SF_6 density and pressure system.

4.4. Block Diagram of System

Figure 16 illustrates the simple block diagram of the system. The Electronic part of the sensor transmits an analogue signal (6.5-20mA) relating to the density of the SF6 gas within a specific part of a Zone. The analogue signal is then input to the TM3 AI Module, transferred to the M251 dPAC which then scales the reading to the desired measurement value (kPa). The reading is then sent to the local HMI, the EAE HMI and the Scada system which can also then be read by the Transmission network control centre (TNCC). The M251 dPAC will also be closely monitoring the value of the signal to ensure that the values do not fall below the thresholds, if this happens then a signal will be sent to the Scada system and protection relay.

Figure 16 also illustrates the mechanical sensor operation. The mechanical part of the sensor will operate a falling and low alarm signal which is then fed back to the protection relay and the Scada system and a backup as a precaution to the electronic sensor failing.

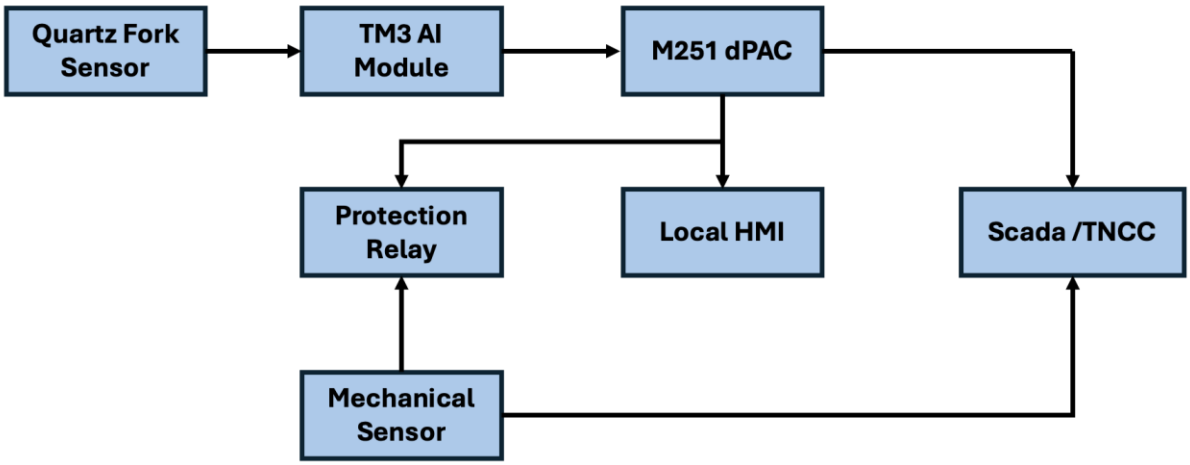

Figure 16: Block Diagram of Proposed Gas Density Monitoring system

4.5. Prototype

To ensure that the system design met all specified requirements, the development of a prototype was undertaken. Producing a prototype aid's in demonstrating that the design is compliant with the functional and performance criteria, and that the system operates as intended. Additionally, prototyping allows for the early identification of potential design flaws. By verifying the design at an early stage, costly re-work during later phases can be avoided, and valuable feedback can be gathered from stakeholders to refine and improve the final implementation.

The prototypes program presents one circuit within the substation representing one zone. The PLC program involves one sensors operation from within the zone demonstrating the operation of the system and how it would operate in the full implementation within the substation. The HMI presents a potential look on the final systems local HMI's, designed to resemble the existing system for ease of use to the operators for familiarity.

4.5.1. Siemens TIA

4.5.1.1. Flow Chart

Error! Reference source not found. illustrates the system flow chart of the protype system. This can also be found in Appendix D.

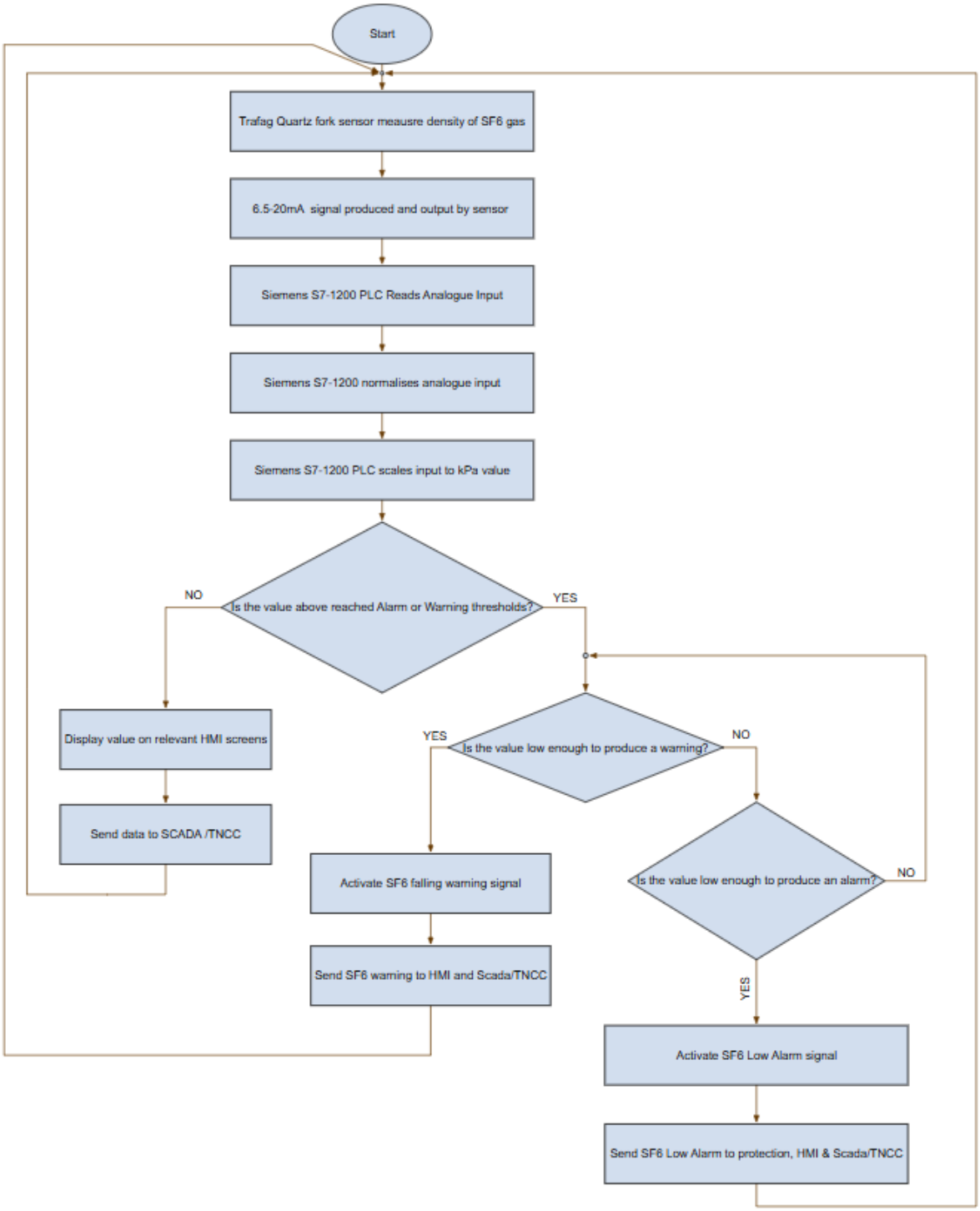

Figure 17: Prototype System Flow Chart

4.5.1.2. PLC Tags

Figure 18 presents the PLC tags used in the prototype software for the B1 sensor "Margam circuit" represented as "Zone 1". The PLCs tags involve addresses such as "I" for inputs, "Q" for outputs and "M" for memory bits which are within the program and are not physical inputs or outputs which can be set and reset.

PLC tags

	Name	Tag table	Data type	Address	Retain	Acces...	Writa...	Visibl...	Comment
1	Zone1_B1_L1_kPa	Default tag table	Real	%MD0		✓	✓	✓	
2	Zone1_B1_L1_Warning	Default tag table	Bool	%I4.0		✓	✓	✓	
3	Zone1_B1_L1_Alarm	Default tag table	Bool	%I4.1		✓	✓	✓	
4	Zone1_B1_L1_AO	Default tag table	Int	%IW6		✓	✓	✓	
5	Zone1_B1_L1_Acknowledge	Default tag table	Bool	%I8.0		✓	✓	✓	
6	HMI Communication analogue ...	Default tag table	Int	%IW8		✓	✓	✓	
7	Zone1_B1_L1_AI	Default tag table	Int	%IW64		✓	✓	✓	
8	Alarm & Close lockout to prote...	Default tag table	Bool	%Q0.0		✓	✓	✓	
9	Warning command to Protecti...	Default tag table	Bool	%Q0.5		✓	✓	✓	

Figure 18: Siemens TIA V16 PLC Tags

4.5.1.3. PLC Ladder Logic

The PLC ladder logic tarts with the first network consisting of the analogue processing of the input signal from the sensor after the analogue processing is complete an output value of kPa is produced and stored as a memory bit as presented in Figure 19.

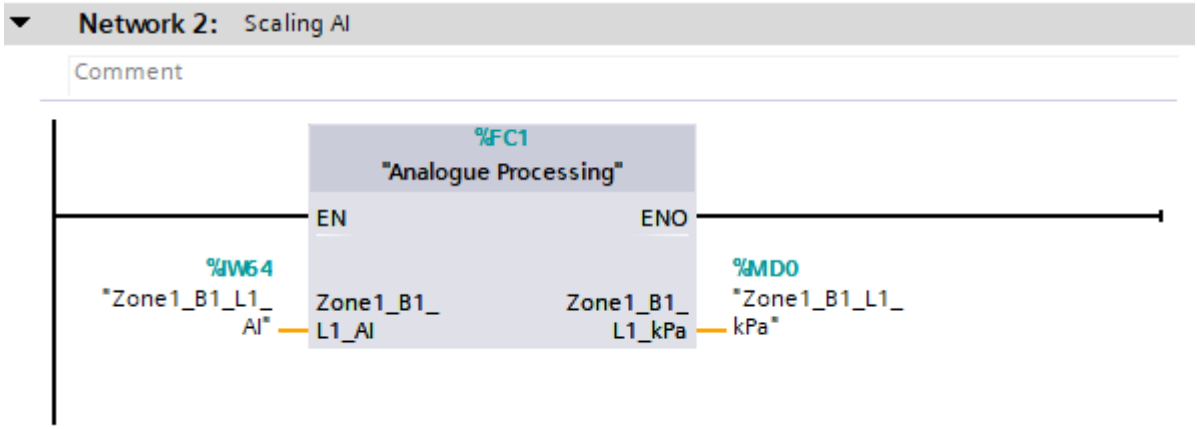

Figure 19: Start of Siemens prototype program

Figure 20 illustrates the function block within the analogue processing block from Figure 19. The function block consists of a normalise instruction and a scaling instruction. The normalising instruction takes the input value which is an integer as it is a whole number (the 6.5mA-20mA signal) from the sensor and converts it to a real value data type which is produced as a percentage, the percentage then goes to a scale_X instruction where a minimum value of 0 and a maximum value of 640 is set, this instruction will then convert the percentage value to the kPa value that represents the density value from the sensor.

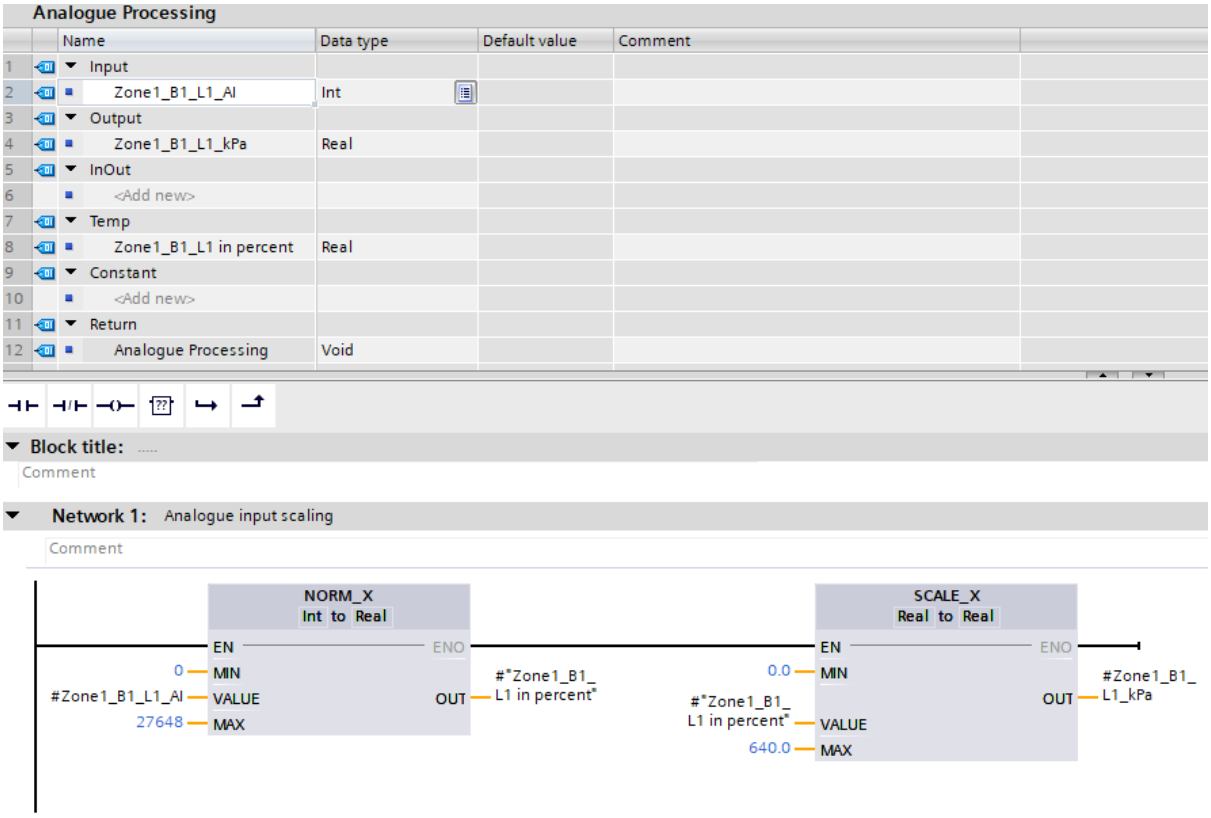

Figure 20: Analogue Processing for Input from Sensor

Figure 21 presents the Warning and alarm logic. The memory bit value produced by the analogue processing is used in a “In Range” instruction, the instruction consists of two thresholds that are set by the falling value thresholds from the sensor, if the kPa value falls between these values the instruction will trigger the warning output assignments, these are tagged to the HMI screen producing warning notifications while also sending a signal to the SCAD/TNCC.

Figure 21 also illustrates the alarm function, the alarm instruction consists of a “less than or equal to” comparator instruction. The instruction compares the input value from the kPa memory bit value and the set value of the SF6 low threshold (539 kPa). If the kPa value is equal to or lower than 539 kPa an alarm output assignment, these are tagged to the HMI screen producing alarm notifications while also sending a signal to the SCAD/TNCC.

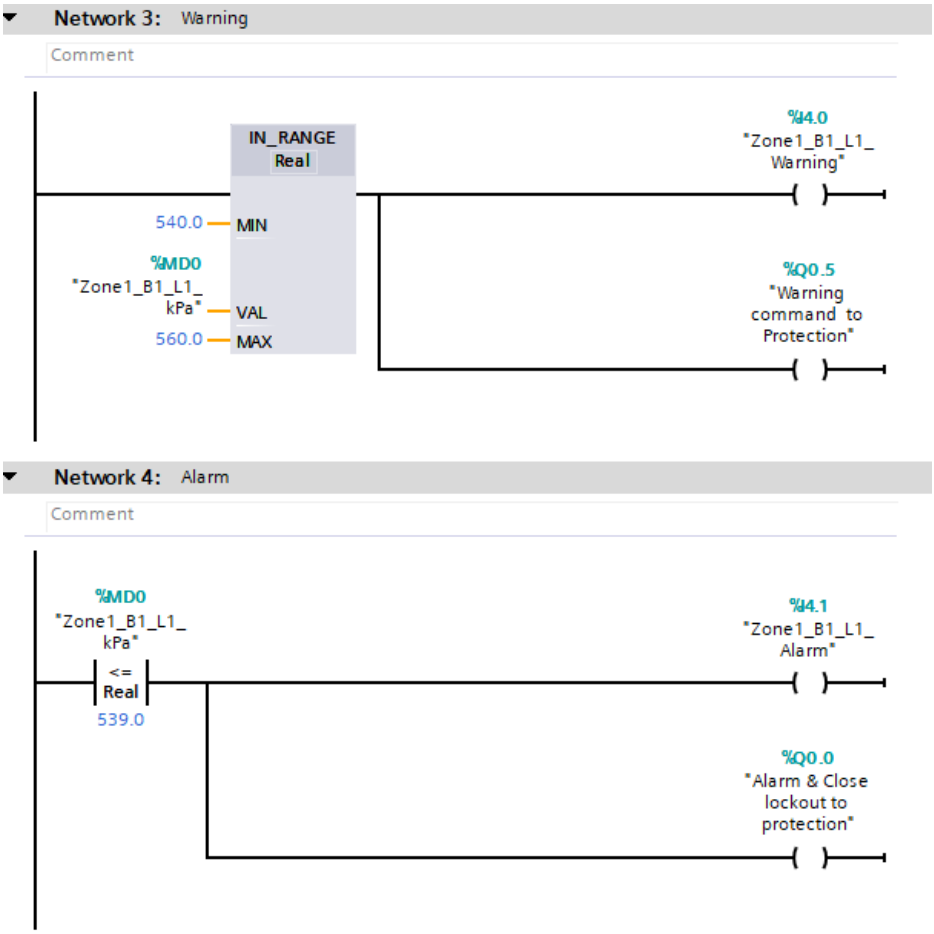

Figure 21: Warning and alarm Thresholds

4.5.1.4. HMI Tags

Figure 22 presents the HMI tags used in the prototype software for the B1 sensor "Margam circuit" represented as "Zone 1". The HMI tags are in different data types, bool represent where a value of 0 or 1 such as an alarm or warning being initiated. Another data type is an Integer (Int) this represents a whole number and is used where a value is presented on the HMI such as the kPa value.

HMI tags

Name	Tag table	Data type	Connection	PLC name	PLC tag
Zone1_B1_ACK	Default tag table	Bool	HMI_Connectio...	PLC_1	Zone1_B1_L1_Acknowle...
Zone1_B1_AI	Default tag table	Int	<Internal tag>		<Undefined>
Zone1_B1_Alarm	Default tag table	Bool	HMI_Connectio...	PLC_1	Zone1_B1_L1_Alarm
Zone1_B1_AO	Default tag table	Int	<Internal tag>		<Undefined>
Zone1_B1_kPa	Default tag table	Real	HMI_Connectio...	PLC_1	Zone1_B1_L1_kPa
Zone1_B1_Warning	Default tag table	Bool	HMI_Connectio...	PLC_1	Zone1_B1_L1_Warning
Zone1_L1_Alarms	Default tag table	Bool	HMI_Connectio...	PLC_1	Zone1_B1_L1_Warning
Zone1_L1_B1 SF6 Level	Default tag table	Int	<Internal tag>		<Undefined>

Figure 22: Prototype HMI Tags

4.5.1.5. HMI set up

Figure 23 presents the prototype home screen. The screen features an image of the substation, the time and date and buttons to navigate to specific screens that the operator or engineer can navigate to.

Figure 23: HMI home screen

Figure 24 illustrates an example of the circuit overview screen. The screen consists of the date/time, circuit/zones identification, the layout of the switchgear with all the sensor positions within the zone stating each phase. All sensors have identification, the sensors state LED and kPa value as shown in “red phase” “B1”. The user can also navigate through to the next screen or back to the home screen using the tabs in the top left and right.

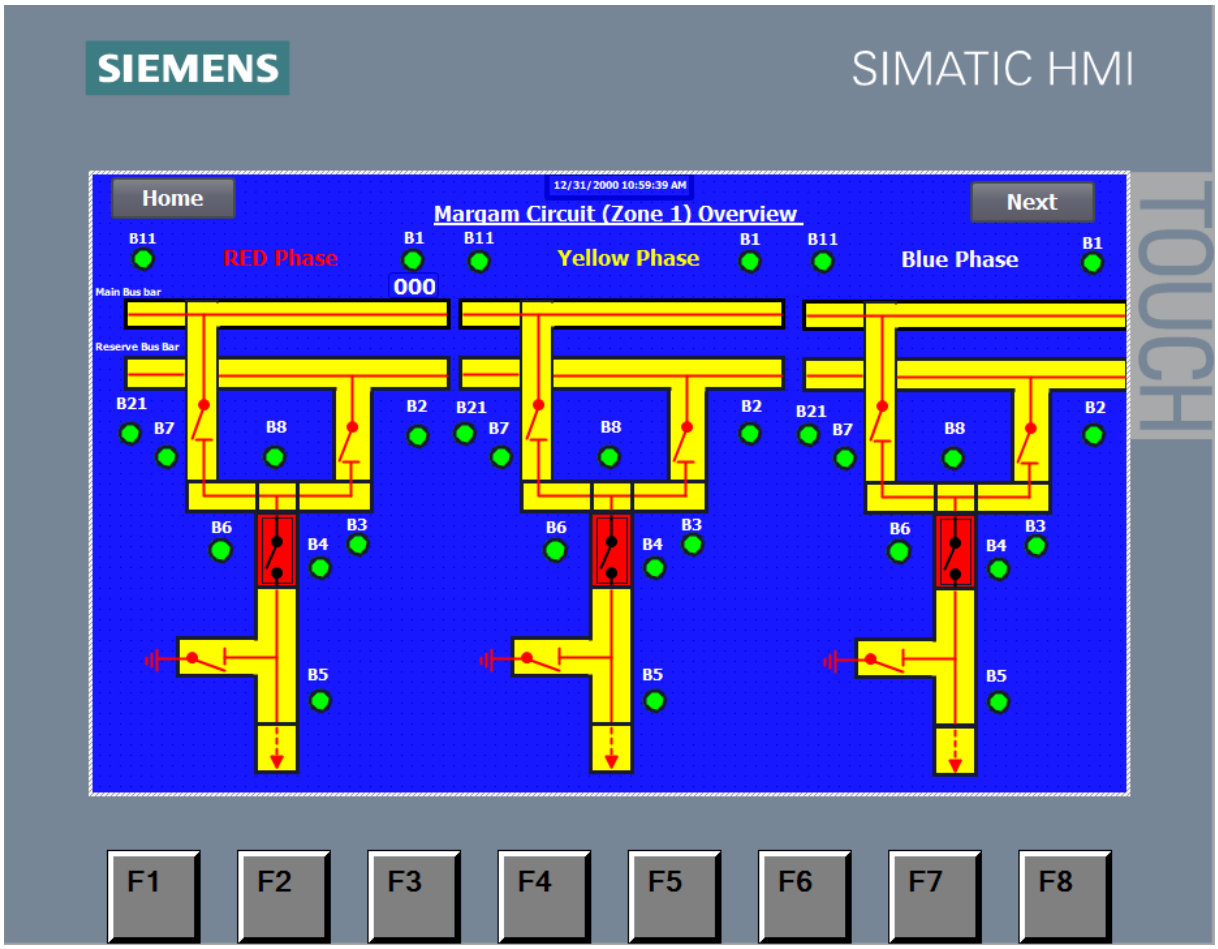

Figure 24:HMI Circuit Overview Screen

Figure 25 presents Zones 1,2 & 3 density value screens, the screen is designed for the user to view multiple zones density values at once to aid with comparing data.

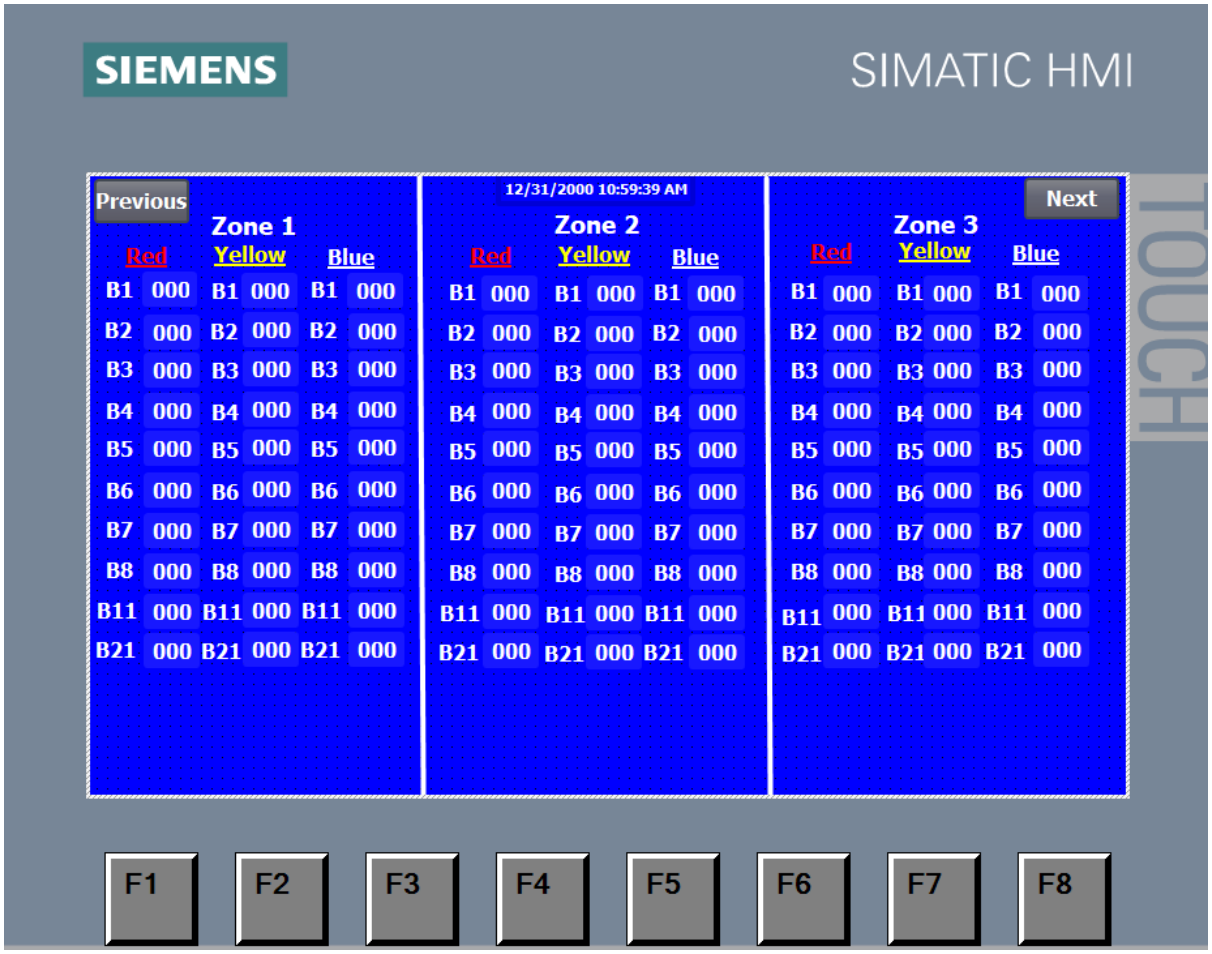

Figure 25Zone 1,2 & 3 sensor value screen

Figure 26 illustrates the alarm and warning screen view, when an alarm or warning has been initiated the screen allows the user to view the standing alarm or warning and to acknowledge the alarm when the issue has been investigated and fixed. The alarm will not clear until the SF6 gas has been refilled to the correct value.

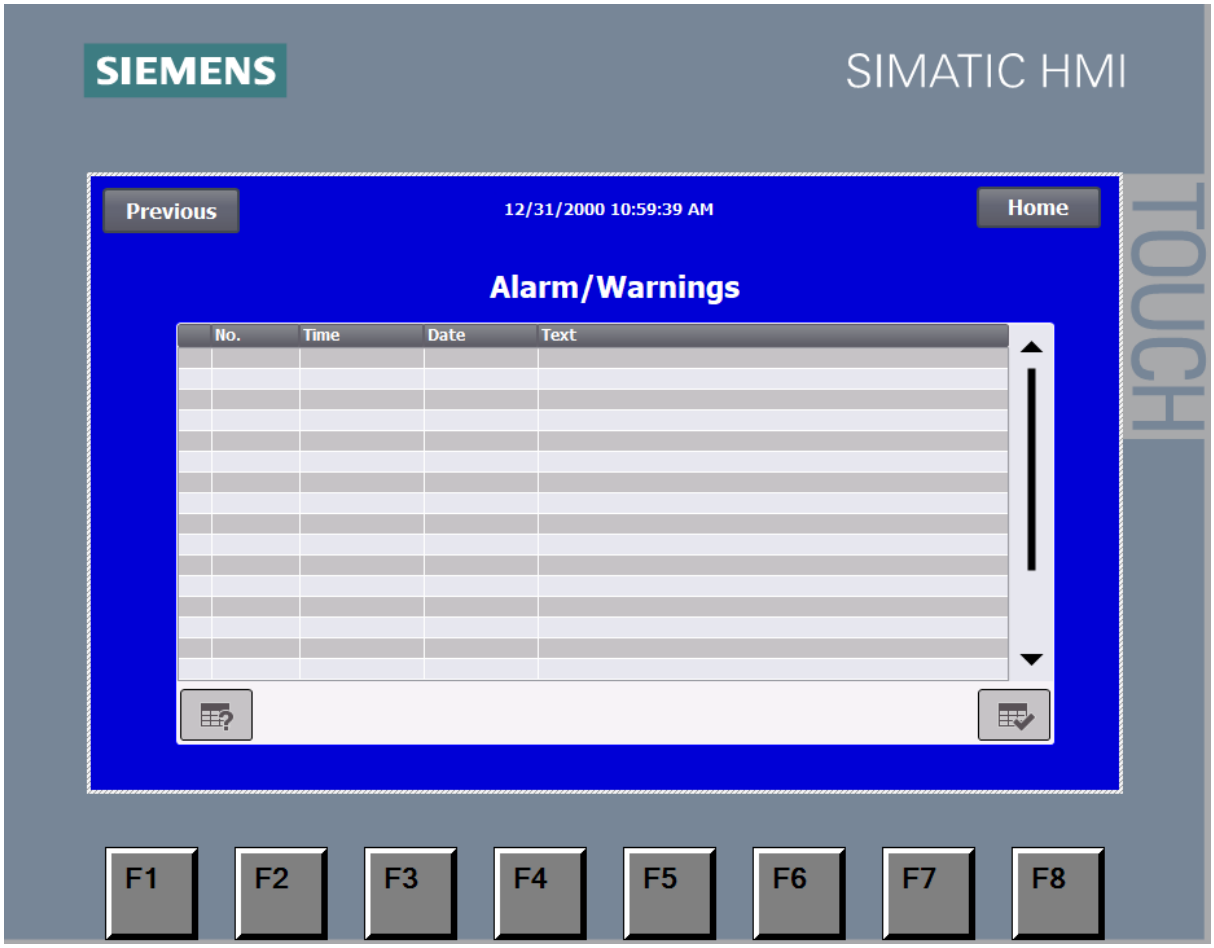

Figure 26 : Alarm View Screen

4.5.2. Prototype Components

Table 14 and Table 15 illustrates the chosen hardware and components for the prototype. The components and hardware were chosen for the prototype due to the readily available parts. Due to the nature of the design a potentiometer was used to simulate the sensor analogue input since using the actual sensor would require SF6 to simulate the feedback which would be impractical. A LM317T voltage regulator circuit was used to supply the potentiometer as the analogue input on the plc only accepted 0-10V input while giving a sensor supply output of 24VC.

Table 14: Prototype components

Description	QTY	Price Each (£)	Image	Reference
Siemens S7-12001215 DC/DC/RLY	1	£1,750.80		[40]
Siemens KTP 700 HMI	1	£944.40		[41]
10k Potentiometer	1	£7.63		[42]
LM317T Voltage Regulator	1	£7.58		[43]
240 Ohm Resistor	1	£4.03		[44]

Table 15: prototype Components Pt.2

1.6k Resistor	1	£0.65		[45]
Red Indication LED	2	£4.68		[46]
Terminal Blocks	6	£8.47	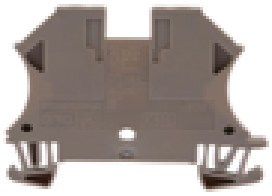	[47]
DC Supply	1		Supplied in the lab	
Cable & Crimps			Supplied in the lab	

4.5.2.1. Voltage regulator calculation

The following calculation presents the resistor values needed to complete the voltage regulator circuit shown in Figure 27 to supply the potentiometer with +10VDC.

$$Vout = 1.25V\ X\ (\ 1 + \frac{R2}{R1}\ )$$

$$R2 = R1\ X\ (\frac{Vout}{1.25V} - 1\ )$$

Given: $Vout = 10V$

Given: $R1 = 240\Omega$

$$R2 = 240\ X\ \left(\frac{10}{1.25} - 1\right)$$

$$R2 = 240\ X\ (\ 8 - 1)$$

$$R2 = 240\ X\ 7$$

$$R2 = 1680\Omega$$

Resistor values: R1 = 240Ω

R2 = 1.6kΩ

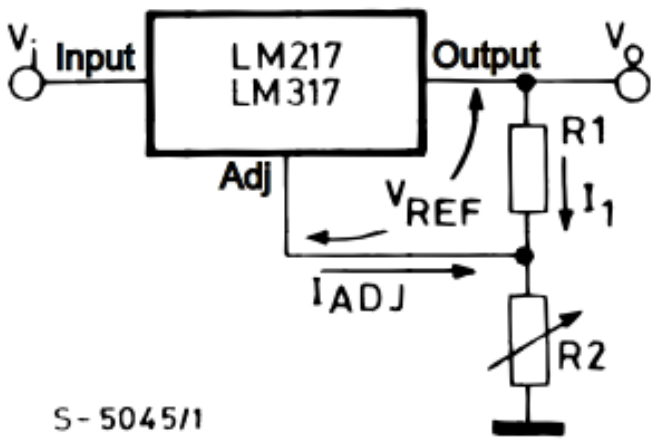

Figure 27: LM317T Voltage regulator Circuit [29]

4.5.3. Circuit Diagram

Figure 28 presents the final revision of the cable block diagram of the prototype providing a clear illustration of component locations and interconnections. The diagram was provided as a reference for the prototype build.

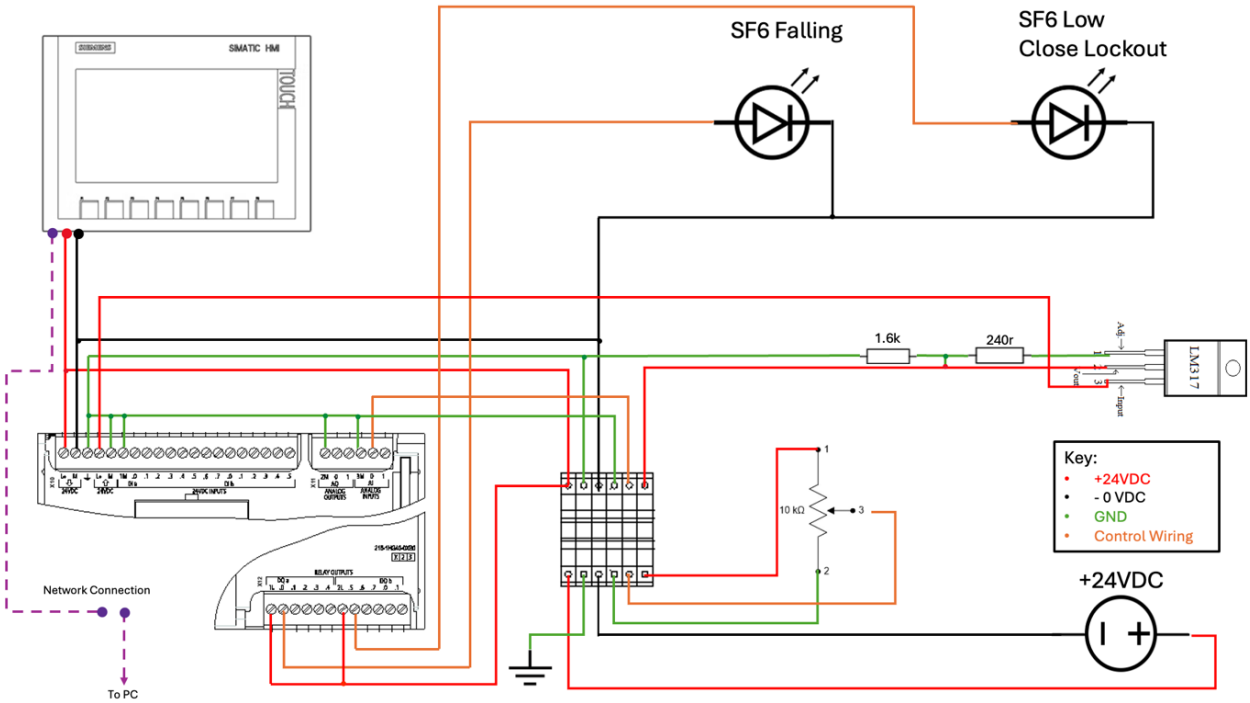

Figure 28: Prototype Wiring Diagram

4.5.4. Testing

Table 16 illustrates the test plan to prove the functionality and practicality of the prototype design.

Table 16: Test plan for prototype

Test No.	Test Description	Expected Outcome	Pass/Fail
1	Power supply output check (LM317)	Stable +10VDC output from LM317 with no load and under load	PASS
2	Sensor 4-20mA simulation	Correct voltage levels generated from potentiometer.	PASS
3	Analog input read by PLC	6.5–20mA correctly normalised to engineering value (0–640kPa)	PASS
4	Analog scaling function test	kPa value correctly calculated and displayed	PASS
5	HMI display update	Real-time display of kPa value	PASS
6	Warning threshold simulation	Generate a falling warning at 560kPa, warning displayed on HMI.	PASS
7	Alarm threshold simulation	Generate a low alarm at 540kPa, alarm displayed on HMI and SCADA	PASS
8	Warning signal to protection relay (LED)	Warning triggers LED signal output	PASS
8	Alarm signal to protection relay (LED)	Alarm triggers relay lockout (LED) signal output	PASS
9	Relay lockout function	Protection relay locks out when alarm received	PASS
10	Reset procedure	System acknowledges and resets alarm correctly when SF6 Level is reset	PASS
12	Power interruption and recovery	System restarts correctly after power loss, alarm states retained if needed	PASS

4.5.5. Prototype Build

Figure 29 presents the final prototype build consisting of the all the previously mentioned components while also one of the Trafag sensors that's intended to be used in the final project.

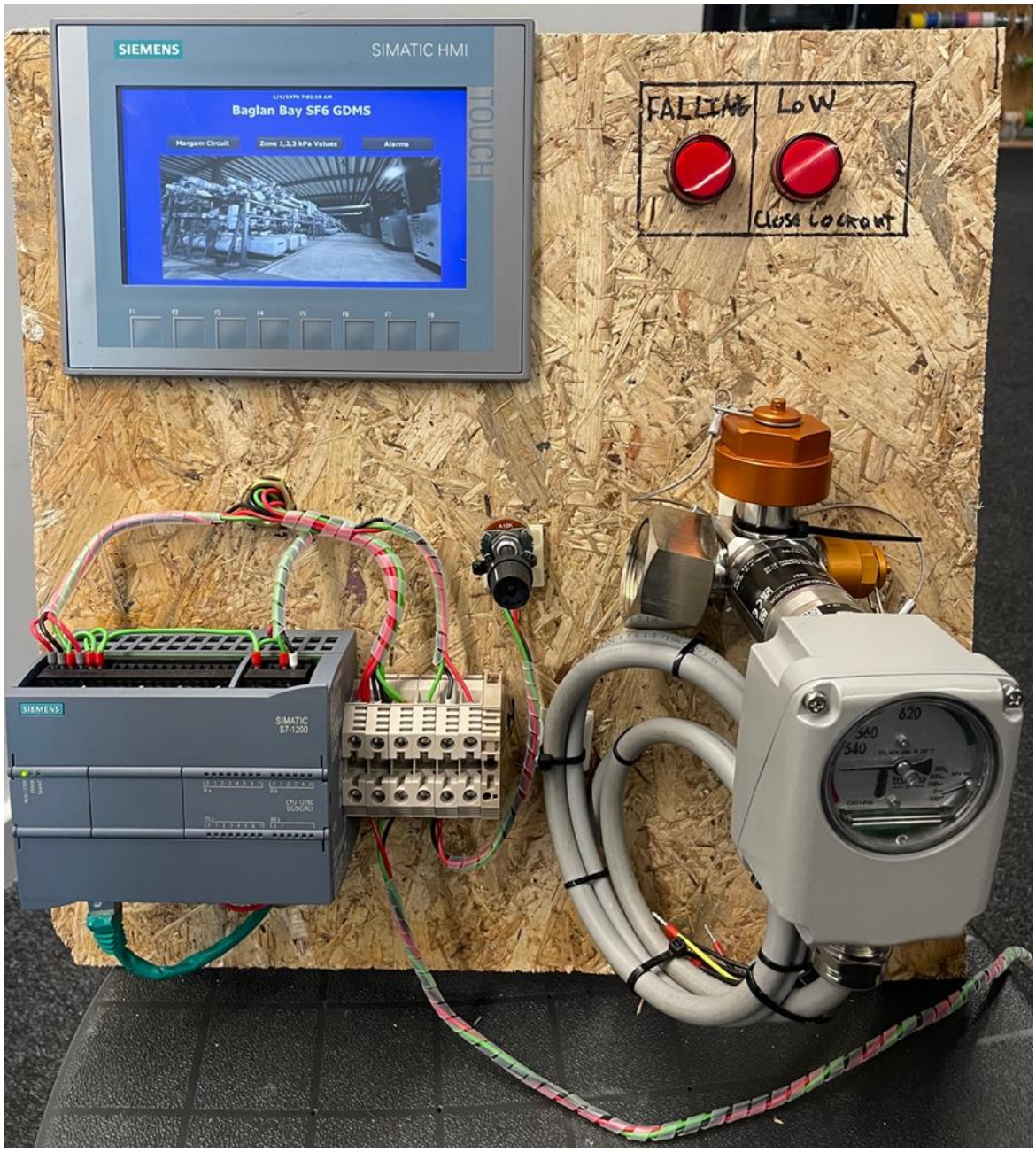

Figure 29: Overall View of Prototype Build

Figure 30 and Figure 31 illustrates the PLC, terminal blocks, Potentiometer, HMI and LED connections, the voltage regulator is hidden within the trunking.

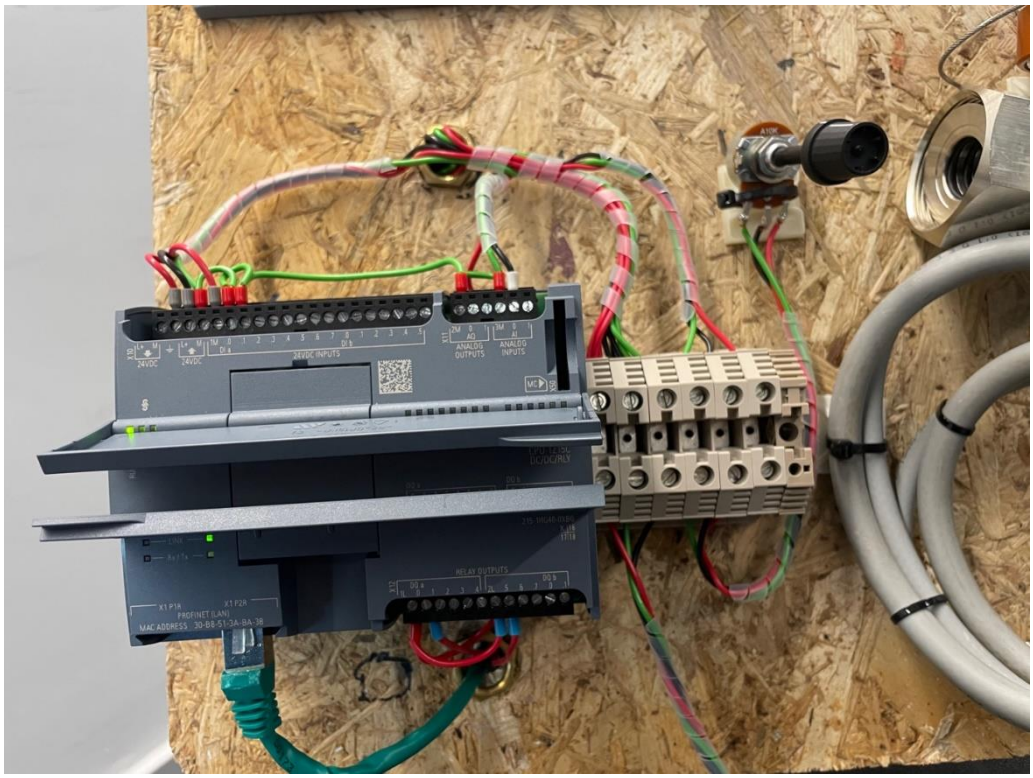

Figure 30 PLC, Terminal block & Potentiometer Connections

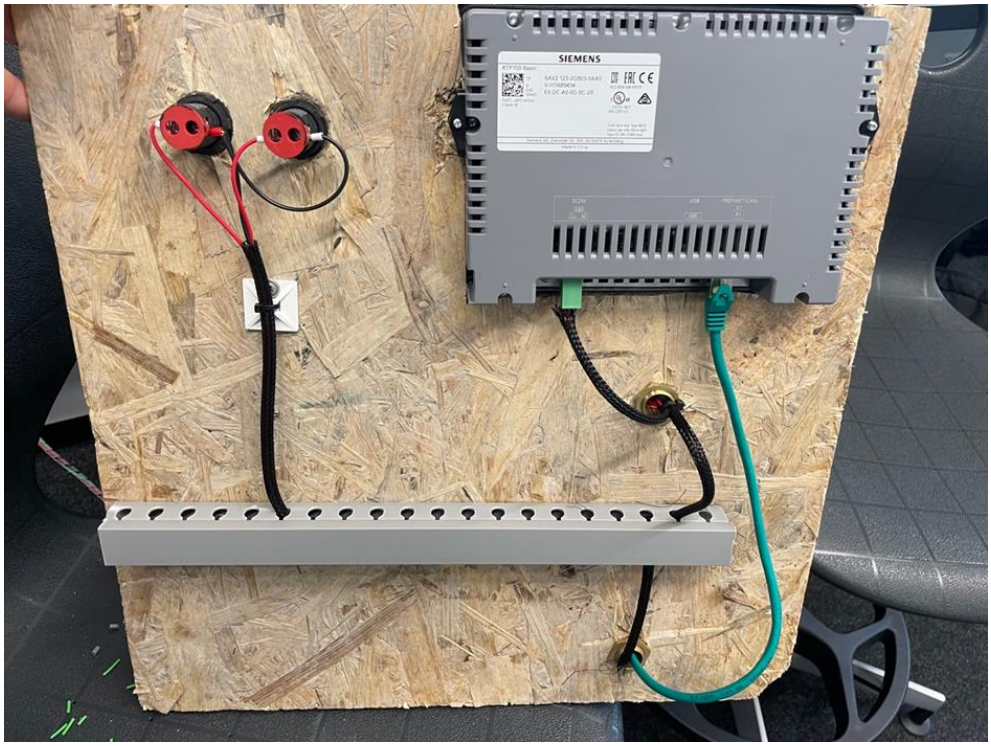

Figure 31: HMI and LED Connections

4.5.6. Simulation

Figure 32 illustrates the falling LED activated when the level falls within the warning threshold. A Yellow box around the kPa value also lights up in result of falling SF6 level.

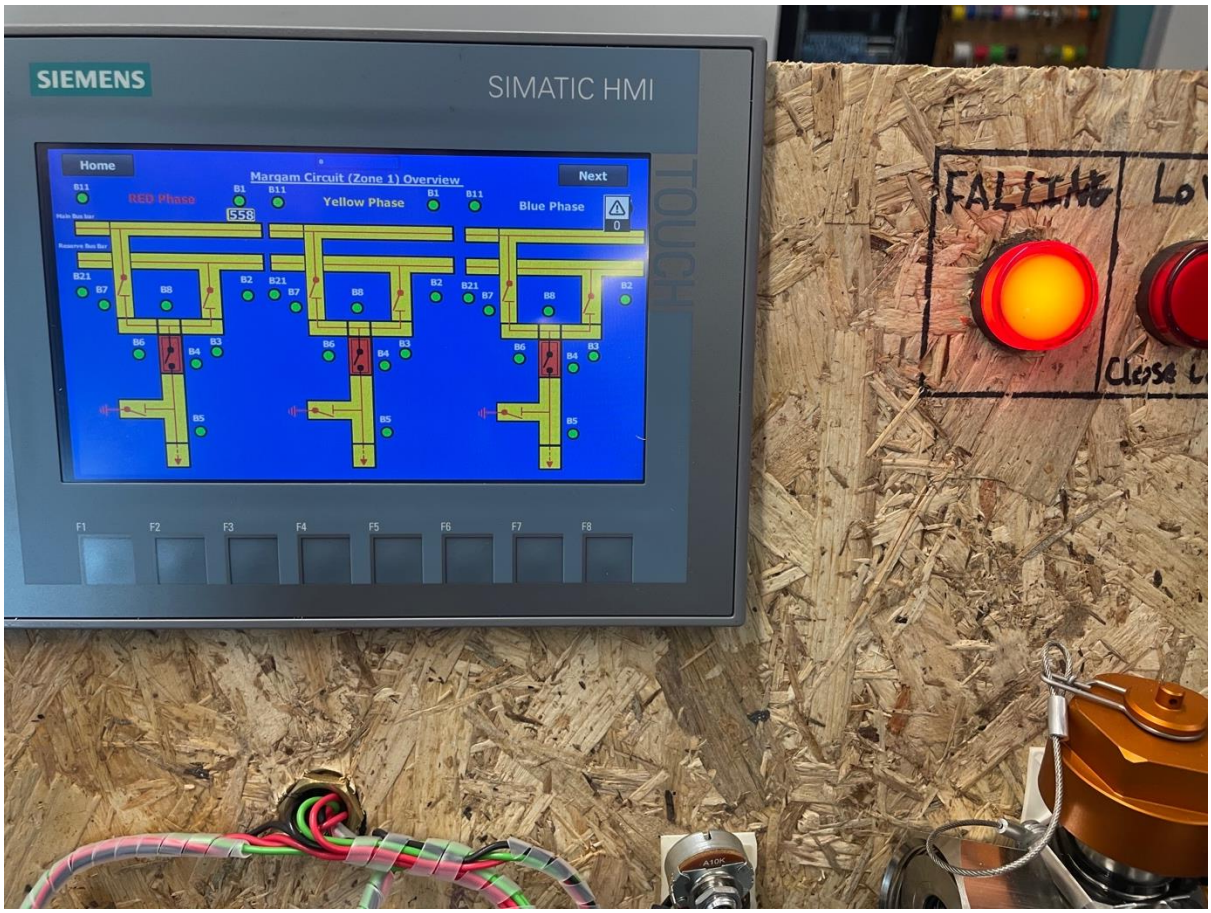

Figure 32: Falling Warning notification on Overview on HMI

Figure 32 presents the multiple Zone level screen with the level in the falling threshold.

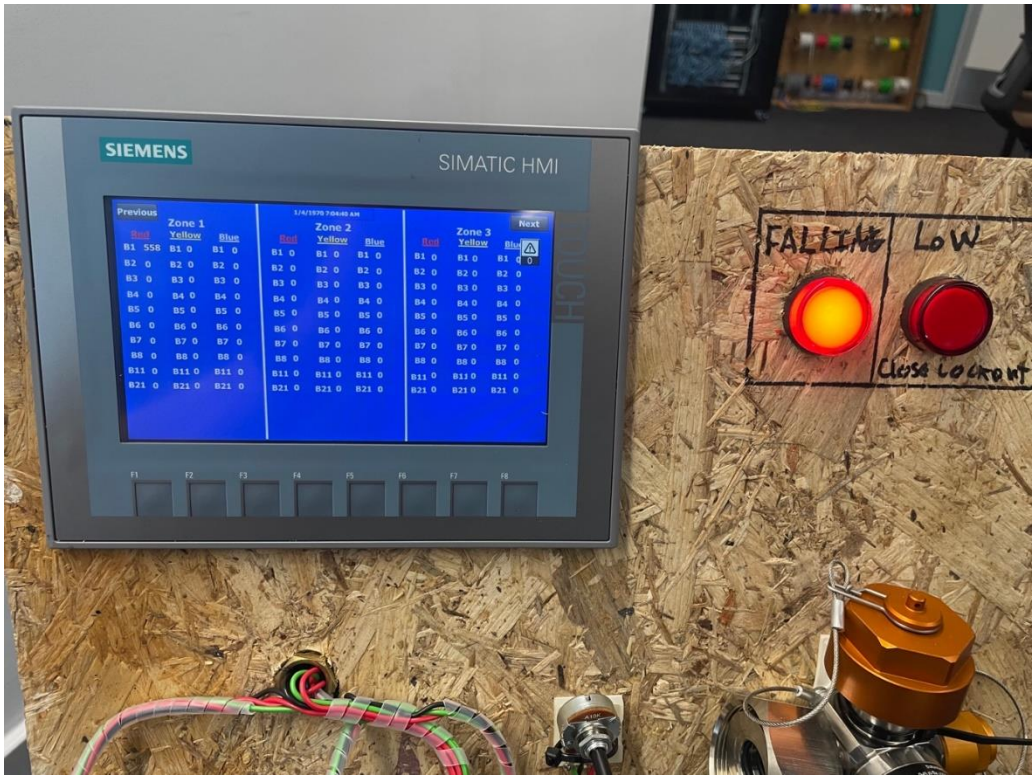

Figure 33: Zone values screen showing the falling SF6 density value

Figure 34 shows the Alarm/Warning screen with the SF6 warning notification.

Figure 34: Alarm or warning screen with SF6 warning notification

Figure 35 presents the warning notification/instruction for the user.

Figure 35:Warning notification Label/instruction

Figure 36 illustrates the immediate alarm warning when the alarm has been initiated.

Figure 36: Immediate alarm pop up notification

Figure 37 shows the circuit overview with the low-level alarm LED sensor state red

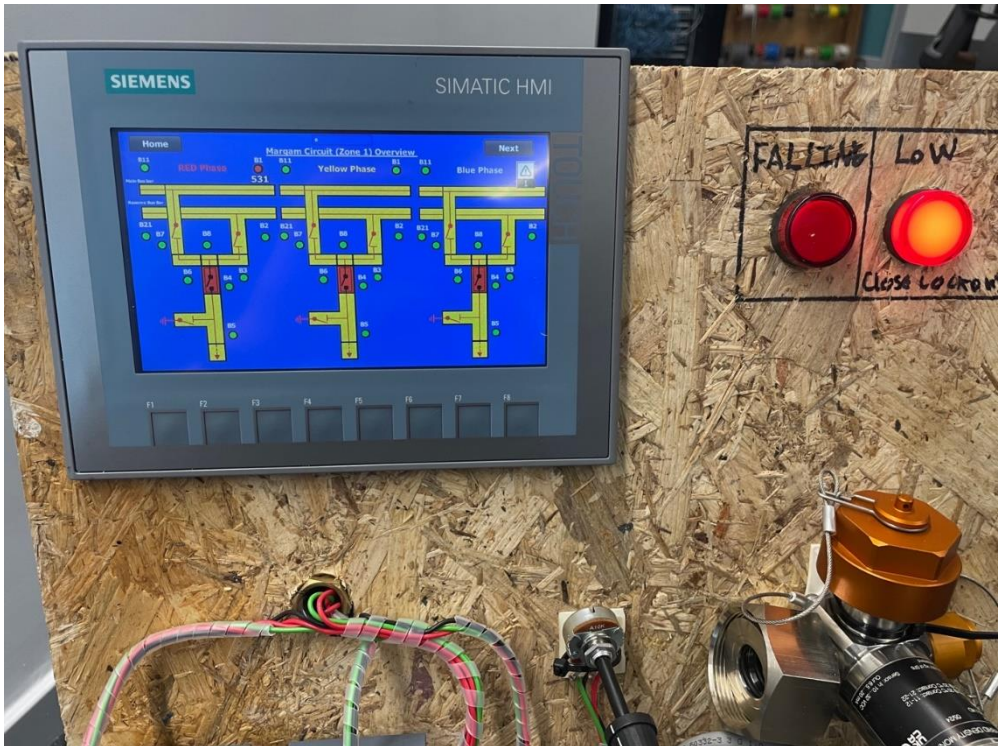

Figure 37: Circuit overview with Alarm LED Lit

Figure 38 illustrates low value on the multiple zone screen while the alarm Led is lit.

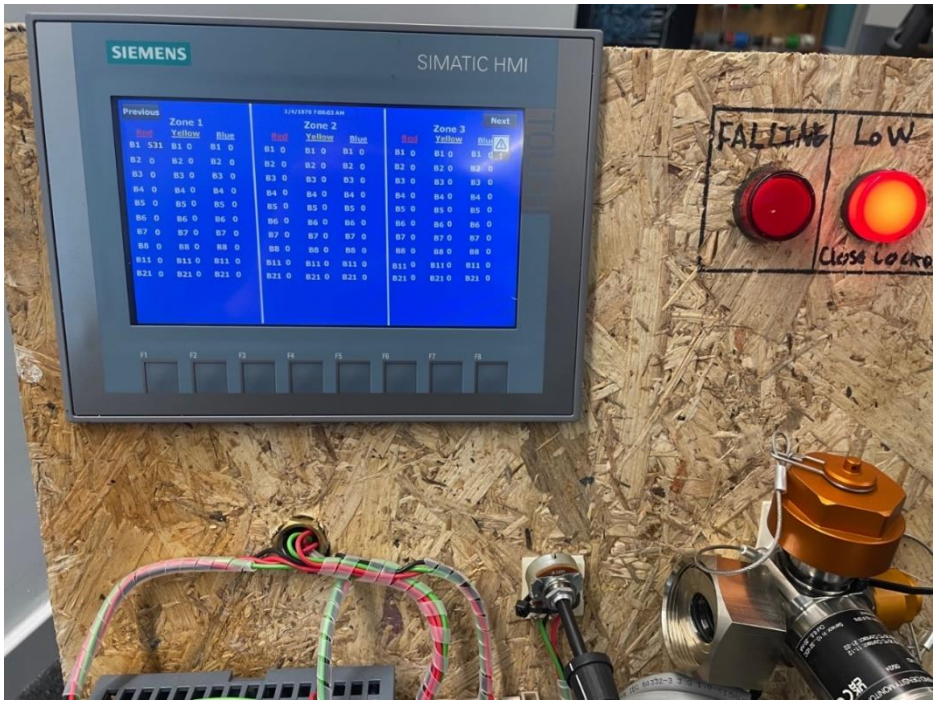

Figure 38: Zone screen with low value and lit lockout LED

Figure 39 illustrates the alarm/ waarning screen with low alarm.

Figure 39: Alarm/Warning screen with Low Alarm

Figure 40 presents the alarm notification/instruction

Figure 40: Alarm Notification Label/Instruction

4.6. Implementation of the Site Gas density Monitoring System

The prototype design passed the testing and functionality check resulting in the implementation strategy for the onsite system to start. The drawings had been created and approved along with certain test/calibration instruments to be used to commission the sensors/system. The onsite projects start date was pushed back due to other priority jobs taking over during the time of this project thus resulting in the onsite install not being complete ready for commissioning by this project end date.

4.6.1. Outline of the overall implementation strategy.

The outline of some resources of the onsite install are listed below where a contractor worked closely to achieve the project design aims and objectives.

4.6.1.1. Sensor positions in Substation

Figure 41 demonstrates the schematic of the site sensor locations within the substation. A full version can be found in Appendix D.

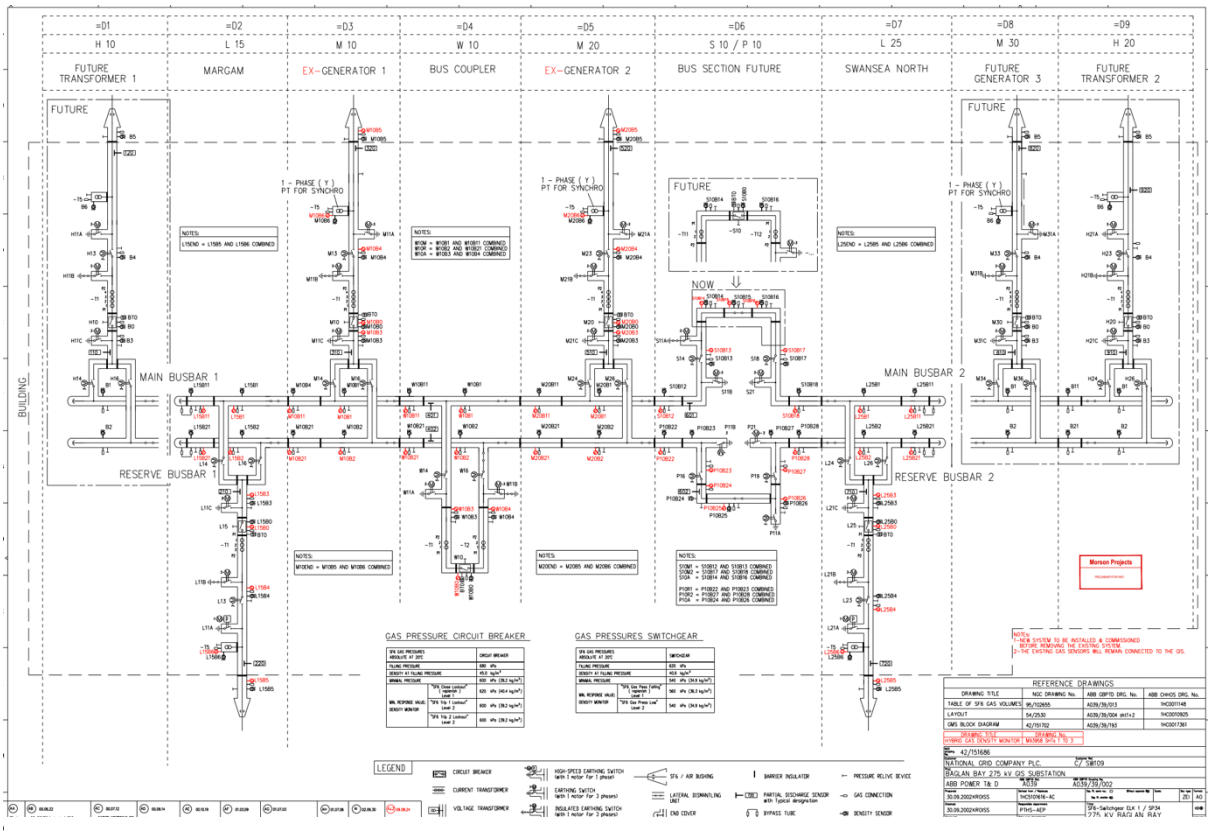

Figure 41: Overview of the substation sensor selections

4.6.1.2. Cabling from Sensor

Figure 42 presents the final revision of the cable block diagram from the sensors to the local control cabinets, providing a clear illustration of component locations and interconnections. The diagram was provided as a reference for the team on site. A full version of the cable block diagram can be found in Appendix E.

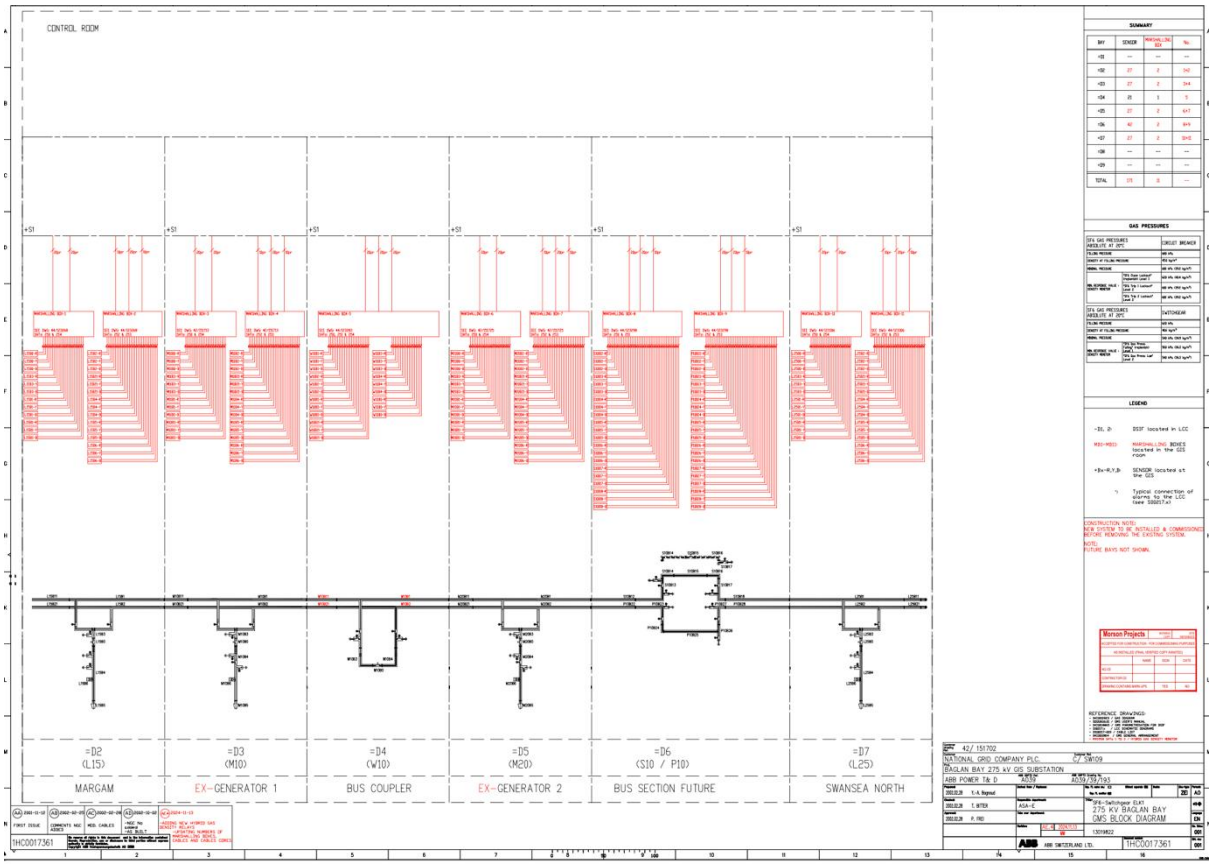

Figure 42: Site Sensor to Local control Cabinet Block Diagram

5. Evaluation

The outcomes of this project suggest that the proposed SF6 gas monitoring system is both technically viable and functionally effective. Data obtained from the prototype such as the successful detection of falling and low-pressure thresholds and corresponding alarm activation show that the system can reliably monitor SF6 levels in real time. These results are consistent with the findings from the literature review, which highlighted the importance of accurate and responsive leak detection systems in preventing equipment damage and reducing environmental impact.

The data collected and analysed during the prototype testing supports the conclusions drawn from the reviewed literature, particularly in demonstrating that a well-designed sensor and PLC-based system can enhance safety and ensure regulatory compliance in GIS applications. The inclusion of both electronic and mechanical feedback pathways, as outlined in the system design, also confirmed that redundancy in monitoring improves overall system reliability another point emphasised in the literature.

All the main objectives outlined at the beginning of the project were met. These included selecting suitable sensors, designing a scalable monitoring system, integrating PLC and HMI components, and successfully simulating system operation through prototype development. The project also achieved its overall aim to design a system capable of effectively detecting SF6 leaks and providing real-time data to both local and central control systems.

The results were in line with expectations based on prior research and industry practices. No unexpected behaviours or inconsistencies were encountered during testing. However, it is worth noting that the prototype was limited to a single zone and a small number of sensors. Full-scale implementation in a live substation environment may present additional challenges that may not have been observed during this phase.

If the project were to be repeated or extended, improvements could include earlier engagement with site engineers to ensure the design is more closely aligned with operational requirements. Further long-term testing could be conducted to assess system performance under different environmental conditions. Additionally, future

development could explore cloud-based analytics or AI-driven features for predictive maintenance as covered in the literature review.

In conclusion, the project successfully met its aims and objectives, providing a solid foundation for future deployment and enhancement in real-world substation environments.

6. Conclusion

This project set out to design and implement a reliable, scalable, and regulation-compliant SF6 gas monitoring system for use in high-voltage gas-insulated switchgear (GIS). The primary aim was to improve the safety, operational reliability, and environmental performance of substations by enabling real-time monitoring and early detection of SF_6 gas leaks, which pose significant environmental risks due to their high global warming potential.

The work began with an in-depth literature review exploring current technologies, industry practices, and environmental regulations. This provided a solid foundation for identifying the system requirements and selecting appropriate components, from this, it was obvious that a solution integrating real-time gas density sensors, programmable logic controllers (PLCs), and HMI/SCADA visualisation would be most effective.

The design and development phase included the selection of Trafag C40149 sensors, supported by Schneider Electric's EcoStruxure platform, with the prototype programmed using Siemens TIA Portal. The system was developed with a modular and user-friendly architecture, designed to enable straightforward expansion and future integration. A working prototype, simulating one GIS circuit, was produced and successfully demonstrated the system's capabilities in real-time monitoring, alarm triggering, and communication with local and central control systems.

The implementation met all the defined objectives. The system operated as intended and the results aligned closely with the findings from the literature. In particular, the project confirmed that combining electronic and mechanical sensing elements improves

overall reliability and resilience. The system also supports broader sustainability and compliance goals by allowing early intervention in the event of gas leaks.

6.1. Suggestions for Further Work

While the project achieved its intended outcomes, several areas have been identified where additional work could extend and improve upon this foundation:

Full system deployment: The prototype covered a single zone. Testing the system across a full substation would allow for assessment of scalability, communication load, and reliability in a real operational setting.

Extended operational testing: Longer-term testing would help evaluate system durability, sensor accuracy over time, and performance under varying environmental conditions.

Incorporation of predictive analytics and AI: Integrating AI or machine learning could allow for predictive maintenance, helping to identify potential faults or gradual pressure loss before alarms are triggered.

Remote access and cloud integration: Future work could include developing cloud-based dashboards for remote access, data storage, and reporting, improving usability for asset managers and maintenance teams.

Investigation into SF_6 alternatives: Further research could focus on implementing and monitoring low-GWP gas alternatives, supporting the wider environmental objectives set out by regulatory bodies.

6.2. Final Summary

In summary, this project successfully designed and validated a robust SF_6 gas monitoring system that meets the technical and regulatory requirements for high-voltage GIS applications. It contributes meaningfully to improving safety, ensuring

regulatory compliance, and supporting environmental sustainability. While further development is recommended to enable wider deployment and long-term optimisation, the system provides a strong platform for future innovation in substation gas monitoring and asset management.

7. Reflection

Reflecting on my time studying BEng Electrical and Electronic Engineering at the University of Wales Trinity Saint David, and in particular on the completion of this final year project, I can say it has been a challenging yet highly rewarding experience. Transitioning from my HNC studies at Gower College Swansea to a full engineering degree was a significant step up in both academic expectations and personal responsibility. Balancing these demands alongside full-time employment as a Commissioning Engineer at Hornbill Engineering Services while changing job to National grid during this project and trying to keep my property business going has pushed me to develop not only technically, but also personally.

At times, managing both work, study commitments was extremely difficult. I have worked in the industry for over 8 years so undertaking this degree while continuing my professional role required me to make considerable sacrifices and re-evaluate how I prioritise my time. However, this experience has taught me that with the right mindset, determination, and planning, I can overcome challenges and achieve my goals.

This final year project presented a unique opportunity to merge my academic learning with real-world industry application. Initially, I struggled to find a suitable project due to the initial project being left behind with my old job. Fortunately, National grid had a upcoming SF6 Gas density monitoring system upgrade to which I volunteered to lead the project, recognising its potential for both professional and academic development. Managing the project not only meant delivering the work scope but also documenting, analysing, and replicating elements within a simulated environment for this report.

Although the complete commissioned system could not be included in the report due to its complexity and scale and timeline, I am proud of the way I was able to simulate the

system using Siemens TIA Portal and a prototype. This allowed me to clearly demonstrate key features such as sensor integration, alarm thresholds, and data visualisation.

On a technical level, I have significantly improved my understanding of PLC programming, SCADA systems, and sensor-based monitoring all of which are highly relevant to my field. Additionally, I have strengthened my skills in AutoCAD, structured documentation, and system testing.

If I were to repeat this project, I would engage earlier with operational stakeholders to better understand their expectations and incorporate their input into the design process. I would also allocate more time to testing the system under simulated fault conditions to further validate its performance.

To conclude, this has been the most extensive and demanding project I have undertaken. I am highly proud of the outcome and grateful for the growth it has brought about, both personally and professionally. The skills I have gained technical, organisational, and personal will undoubtedly benefit me in my career going forward. I look forward to using this knowledge not only to develop myself further but to support and mentor junior engineers in similar roles.

Bibliography

[1] DEFRA, “F gas regulation in Great Britain,” UK Government , 2022.

[2] RISET, “GMS User Manual Gas Monitoring System,” RISET AG, 2001.

[3] Qualitrol, “iSGM On-line Intelligent SF6 Gas Monitoring System,” Qualitrol, [Online]. Available: https://www.qualitrolcorp.com/products/cbm-software/multi-function-software/isgm-on-line-intelligent-sf6-gas-monitoring-system/.

[4] D. Incorportated, “SF6 LEAK POINTER / SNIFFER,” Dilo inctruments .

[5] J. N. K. B. K. G. Sergio Díaz, “Study of technologies implemented in the operation of SF6 switches,” Purpose LED Publishing , Atlantico Colombia , 2020.

[6] X. Zhang, “Research status of replacement gases for SF6 in power industry,” AIP Advances , 2020.

[7] M. Eves, “A Literature Review on SF6 Gas Alternatives for use on the Distribution Network,” Western Power Distribution , 2018.

[8] P. Castro, J. Aráujo, G. Martinho and A. Pereiro, “Waste Management Strategies to Mitigate the Effects of Fluorinated Greenhouse Gases on Climate Change,” MDPI, Switzerland , 2021.

[9] ACRIB, “ACRIB,” 6 April 2016. [Online]. Available: https://acrib.org.uk/news/company-pays-21000-in-fines-and-costs.

[10] P. G. Simmonds, “The increasing atmospheric burden of the greenhouse gas sulfur hexafluoride,” Copernicus Publications on behalf of the European Geosciences Union., 2020.

[11] M. F. Judith Ward, “Sustainability First. DNO ED2 Business Plans,” Sustainability first, 2022.

[12] D. Kilpatrick, “SF6 Alternatives CLOSEDOWN REPORT,” Western Power Distribution , 2018.

[13] J. W. a. J. W. Maxine Frerk, “Green Grids: Tackling SF6 Emissions on GB Electricity Networks,” Grid Edge Policy , 2023.

[3]

[14] P. W. a. A. (. Haddad, “Evaluation of SF6 Leakage from Gas Insulated Equipment on Electricity Networks in Great Britain,” MDPI, Cardiff, 2018.

[15] S. Y. S. M. R. H. J. a. H. W. Wei Xu, “Modularization Design of Inspection Robot Based on Substation,” IAEAC , 2018, 2018.

[16] B. C. C. X. Y. W. Jing Huang, “Research On Intelligent Detection of Sulfur Hexafluoride Gas Leakage in Confined Spaces,” ICEPE-ST, 2022.

[17] Y. Z. Y. W. B. L. G. T. a. Y. Y. Wenrong Si, “Monitoring SF6 Gas Leakage Based on a Customized Binocular System,” MDPI, Basel, Switzerland, 2024.

[18] H. Tan, “Live Detection Technology of SF6 Equipment Based on Computer Aided Laser Imaging Technology,” IOP Publishing, Chongqing, China, 2020.

[19] Y. Yang, “Design of a multi sensor ultrasonic detection system for SF6 gas leak in Power System,” Electric Power Network Technology Training Department State Grid Hubei Electric Power Company Limited Technical

[9] Training Center Wuhan Electric Power Vocational and Technical College, Wuhan, China , 2020.

[20] N. Grid, “University of Manchester and National Grid team up to develop SF6-free retrofill solution for electricity network,” National Grid, 1 11 2022. [Online]. Available: https://www.nationalgrid.com/university-manchester-and-national-grid-team-develop-sf6-free-retrofill-solution-electricity.

[21] N. Grid, “London Power Tunnels substation takes delivery of supergrid transformers and UK-first SF6-free switchgear,” National Grid, 21 january 2025. [Online]. Available: https://www.nationalgrid.com/media-centre/press-releases/london-power-tunnels-substation-takes-delivery-supergrid-transformers-and-uk-first-sf6-free#:~:text=The%20installation%20of%20SF6,network%20by%2050%25%20by%202030..

[22] H. Energy, “EconiQ™ gas-insulated switchgear (GIS) ELK-04, 145 kV,” Hitachi Energy , [Online]. Available: https://www.hitachienergy.com/uk-ie/en/products-and-solutions/high-voltage-switchgear-and-breakers/gas-insulated-switchgear/gis-for-72-5-1200-kv/econiq-gis-elk-04-145-kv.

[23] N. Grid, “What are scope 1, 2 and 3 carbon emissions?,” National Grid, [Online]. Available: https://www.nationalgrid.com/stories/energy-explained/what-are-scope-1-2-3-carbon-emissions.

[24] H. L. a. J. Romero, “Climate Change 2023: Synthesis Report,” IPCC, Geneva, 2023.

[25] P. L. Faurre, “Systems engineering methodology,” 1988.

[26] T. Controls, “8773 Gas density Sensor,” Trafag Controls, 2017.

[27] s. electric, “schneidr electric eco struxture,” schneidr electric , [Online]. Available: https://www.se.com/ww/en/work/campaign/innovation/platform.jsp.

[28] Kabeltech, “Flex-CH, Halogen-free control cable copper screened,”.

[29] R. Compoinents, “RS Components/ STMicroelectronics LM317T, 1 Linear Voltage, Voltage Regulator 1.5A, 1.2 → 37 V 3-Pin, TO-220,” RS Components , [Online]. Available: https://uk.rs-online.com/web/p/voltage-regulators/7140792?gb=a.

[30] J.popham, “ACRIB- nThe UK umbrella body for the Refrigeration, Air Conditioning and Heat Pump industry associations and institutions,” ACRIB, 2015. [Online]. Available: https://acrib.org.uk/news/company-pays-21000-in-fines-and-costs#. [Accessed 18 02 2025].

[31] M. Eves, “A Literature Review on SF6 Gas Alternatives for use on the Distribution Network,” Western Power Distribution , 2018.

[32] L. Instruments, “ZMJ60XD Density Monitors,” Lanso Instruments .

[33] Trafag, “Seite / sheet M Hybrid Gas Density Monitor/ (Drawing number-M93958),” Trafag.

[34] Wika, “Hybrid gas density monitor with reference chamber With Modbus® interface or analogue 4 ... 20 mA signal Model GDM-RC-100-T,” Wika .

[35] S. Electric, “Modicon M251 dPAC,” Schneider Electric , [Online]. Available: https://www.se.com/uk/en/product/TM251MDESE/modicon-m251-dpac/.

[36] S. Electric, “license, EcoStruxure Automation Expert, run time, application, permanent, 1 user, for M251, M262 dPAC,” Schneider Electric , [Online]. Available: https://www.se.com/uk/en/product/EALAMP/license-ecostruxure-automation-expert-run-time-application-permanent-1-user-for-m251-m262-dpac/.

[37] S. Electric, “license, EcoStruxure Automation Expert, run time, HMI, permanent, 1 user, for Harmony iPC,” Schneider Electric , [Online]. Available: https://www.se.com/uk/en/product/EALH2P/license-ecostruxure-automation-expert-run-time-hmi-permanent-1-user-for-harmony-ipc/.

[38] S. Electric, “Modicon TM3 - 8 analog inputs (screw) 24Vdc,” Schneider Electric, [Online]. Available: https://www.se.com/uk/en/product/TM3AI8/modicon-tm3-8-analog-inputs-screw-24vdc/.

[39] S. Electric, “license, EcoStruxure Automation Expert, run time, HMI, permanent, 1 user, for Harmony ST6,” Schneider Electric , [Online]. Available: https://www.se.com/uk/en/product/EALH1P/license-ecostruxure-automation-expert-run-time-hmi-permanent-1-user-for-harmony-st6/.

[40] S. Electric, “Modicon Managed Switch - 4 ports for copper + 2 ports for fiber optic multimode,” Schneider Electric , [Online]. Available: https://www.se.com/uk/en/product/MCSESM063F2CU0/modicon-managed-switch-4-ports-for-copper-+-2-ports-for-fiber-optic-multimode/.

[41] D. Uk, “Inspiron 27 All-in-One,” Dell Uk, [Online]. Available: https://www.dell.com/en-uk/shop/cty/pdp/spd/inspiron-27-7730-aio/bd773007?tfcid=43590050&gacd=9685798-5484-5761040-270826046-0&dgc=ST&SA360CID=71700000111252883&gclsrc=aw.ds&&gad_source=1&gbraid=0AAAAAD77Ikfv1RdTq7S-31zdsRUN4fX6I&gclid=Cj0KCQjw_JzABhC2ARI.

[42] S. Electric, “10 m, cat 7, green Patch cable,” Schneider Electric , [Online]. Available: https://www.se.com/uk/en/product/VW3E3001R100/10-m-cat-7-green-patch-cable/.

[S. Electric, “Modular box PC, Harmony P6, advanced Intel Celeron 4305UE, 2 Core, 2 Threads, for configured products,” Schneider Electric , [Online]. Available: https://www.se.com/uk/en/product/HMIP6CBCTO/modular-box-pc-harmony-p6-advanced-intel-celeron-4305ue-2-core-2-threads-for-configured-products/?range=22953172-harmony-p6&selectedNodeId=42315478431.

[R. Components, “RS PRO SMA to SMA Simplex Multi Mode Fibre Optic Cable, 0.2mm, 2m,” RS Components , [Online]. Available: https://uk.rs-online.com/web/p/fibre-optic-cable/4258562?gb=s.

[R. Components, “RS Components / Siemens SIPLUS S7-1200 CPU 1215C Series PLC CPU for Use with SIPLUS S7-1200, Transistor Output, 16-Input, Analog Input,” [Online]. Available: https://uk.rs-online.com/web/p/plcs-programmable-logic-controllers/2330532.

[R. Components, “RS Components Siemens SIMATIC Series KTP700 Basic HMI Panel - 7 in, TFT Display, 800 x 480,” [Online]. Available: https://uk.rs-online.com/web/p/hmi-displays/8643961?gb=s.

[R. Compenents, “RS Components/ RS PRO 10kΩ Rotary Potentiometer 1-Gang Panel Mount,” [Online]. Available: https://uk.rs-online.com/web/p/potentiometers/8427002?gb=a.

[48] R. Components, “RS Components Vishay 240Ω Thin Film Resistor 0.6W ±1% MRS25000C2400FCT00,” RS Components , [Online]. Available: https://uk.rs-online.com/web/p/through-hole-resistors/6834180?gb=s.

[49] R. Components, “RS Components / TE Connectivity 1.6kΩ Metal Film Resistor 0.6W ±1% LR1F1K6,” RS Components , [Online]. Available: https://uk.rs-online.com/web/p/through-hole-resistors/0148556?gb=s.

[50] R. Components, “RS Components / RS PRO, Panel Mount Red LED Pilot Light, 22mm Cutout, IP65, Round, 24V ac/dc,” RS Components, [Online]. Available: https://uk.rs-online.com/web/p/pilot-lights/7637909?gb=s.

[51] R. Components, “RS Components/ Weidmuller 1020100000 WDU Series Beige, 4mm², Single-Level, Screw Termination, ATEX,” RS Components , [Online]. Available: https://uk.rs-online.com/web/p/din-rail-terminal-blocks/0425207?gb=s.

[52] IEC, “Tests on electric and optical fibre cables under fire conditions,” [Online]. Available: https://cdn.standards.iteh.ai/samples/23523/cbb2d108281b44168742f0a97fe14a97/IEC-60332-3-22-2018.pdf.

APPENDICEIS

Appendix A

Project Start Date: 01 October 2024

Project Name: SF6 Gas Monitoring System

Week Starting:

Task		Project Lead	Start Date	End Date	Days
	Project Proposal Development				
Task 1	Identify a project topic and a potential supervisor	J.Popham	01/10/2024	04/10/2024	4
Task 2	Begin researching the chosen topic	J.Popham	07/10/2024	16/10/2024	8
Task 3	Define the problem statement and project aims	J.Popham	17/10/2024	22/10/2024	4
Task 4	Outline project objectives and methods	J.Popham	23/10/2024	25/10/2024	3
Task 5	Develop a plan of action including sub-tasks	J.Popham	23/10/2024	25/10/2024	3
Task 6	Identify needed resources and references	J.Popham	23/10/2024	25/10/2024	3
Task 7	Start the writing the project proposal	J.Popham	17/10/2024	28/10/2024	8
Task 8	Complete the Ethics form	J.Popham	23/10/2024	25/10/2024	3
Task 9	Finalise and submit the project proposal by the deadline	J.Popham	28/10/2024	28/10/2024	1
Task 10	Discuss with supervisor on a weekly basis to refine the review	J.Popham	29/10/2024	29/10/2024	1
	Detailed Literature Review				
Task 1	Start researching and write the first draft of the lit review	J.Popham	30/10/2024	19/11/2024	15
Task 2	how the project will impact on cooperate responsibility and sustainability	J.Popham	20/11/2024	26/11/2024	5
Task 5	Continue detailed literature review	J.Popham	27/11/2024	11/12/2024	11
Task 6	Refine and finalise the literature review based on the supervisor feedback	J.Popham	12/12/2024	19/12/2024	6
Task 7	Start to think about design methodology	J.Popham	20/12/2024	24/12/2024	3
	Development Methodology				
Task 1	Begin to outline System Requirements	J.Popham	02/01/2025	09/01/2025	6
Task 2	Outline potential data collection methods	J.Popham	10/01/2025	17/01/2025	6
Task 3	Outline design methodology, key principles and stakeholders for review	J.Popham	20/01/2025	27/01/2025	6
Task 4	Outline implementation methodology	J.Popham	28/01/2025	01/02/2025	4
Task 5	Identify potential limitations	J.Popham	03/02/2025	05/02/2025	3
Task 6	Outline Data Analysis techniques	J.Popham	06/02/2025	08/02/2025	2
	Prepare for Interim Viva				
Task 1	Put research together for interim viva	J.Popham	06/01/2025	10/01/2025	5
Task 2	Start to prepare a PowerPoint presentation	J.Popham	11/01/2025	15/01/2025	3
Task 4	Attend the Interim Viva	J.Popham	16/01/2025	17/01/2025	2
	System Design & Implementation				
Task 1	Begin system design, based on research and supervisor feedback	J.Popham	20/01/2025	31/01/2025	10
Task 2	Outline implementation strategies and identify stakeholders	J.Popham	03/02/2025	07/02/2025	5
Task 3	Start to gather data using appropriate method	J.Popham	10/02/2025	21/02/2025	10
Task 5	Continue implementation of the system	J.Popham	24/02/2025	28/03/2025	25
Task 6	Conduct testing of system functionality and reliability	J.Popham	31/03/2025	11/04/2025	10
Task 7	Validate compliance with environmental regulations	J.Popham	14/04/2025	18/04/2025	5
Task 8	Document testing outcomes	J.Popham	21/04/2025	25/04/2025	5
	Data Analysis & Report Writing				
Task 1	Analyse data collected from the system	J.Popham	31/03/2025	11/04/2025	10
Task 2	Write up findings and discussion for the report	J.Popham	14/04/2025	25/04/2025	10
Task 3	Develop user manuals and guidelines	J.Popham	14/04/2025	21/04/2025	6
Task 4	Complete the bulk of the writing for the report.	J.Popham	31/03/2025	25/04/2025	20
Task 5	Review and edit the report	J.Popham	21/04/2025	28/04/2025	6
Task 6	Ensure all sections are complete	J.Popham	24/04/2025	28/04/2025	3
Task 7	Prepare a complete final draft for supervisor to read and comment on	J.Popham	24/04/2025	28/04/2025	3
Task 8	Finalise and submit the report by the deadline	J.Popham	29/04/2025	29/04/2025	1
Task 9	Prepare for the final viva.	J.Popham	29/04/2025	05/05/2025	5
	Final Viva Preparation & Poster				
Task 1	Practice and prepare for the final viva	J.Popham	30/04/2025	05/05/2025	4
Task 2	Develop and design your poster	J.Popham	30/04/2025	06/05/2025	5
Task 3	Prepare exhibition materials such as images and the questionnaire	J.Popham	30/04/2025	06/05/2025	5
Task 4	Attend the Final Viva	J.Popham	07/05/2025	07/05/2025	1
Task 5	Demonstrate the project deliverables	J.Popham	07/05/2025	07/05/2025	1
Task 6	Submit poster by the deadline	J.Popham	09/05/2025	09/05/2025	1
Task 7	Submit exhibition questionnaire	J.Popham	09/05/2025	09/05/2025	1

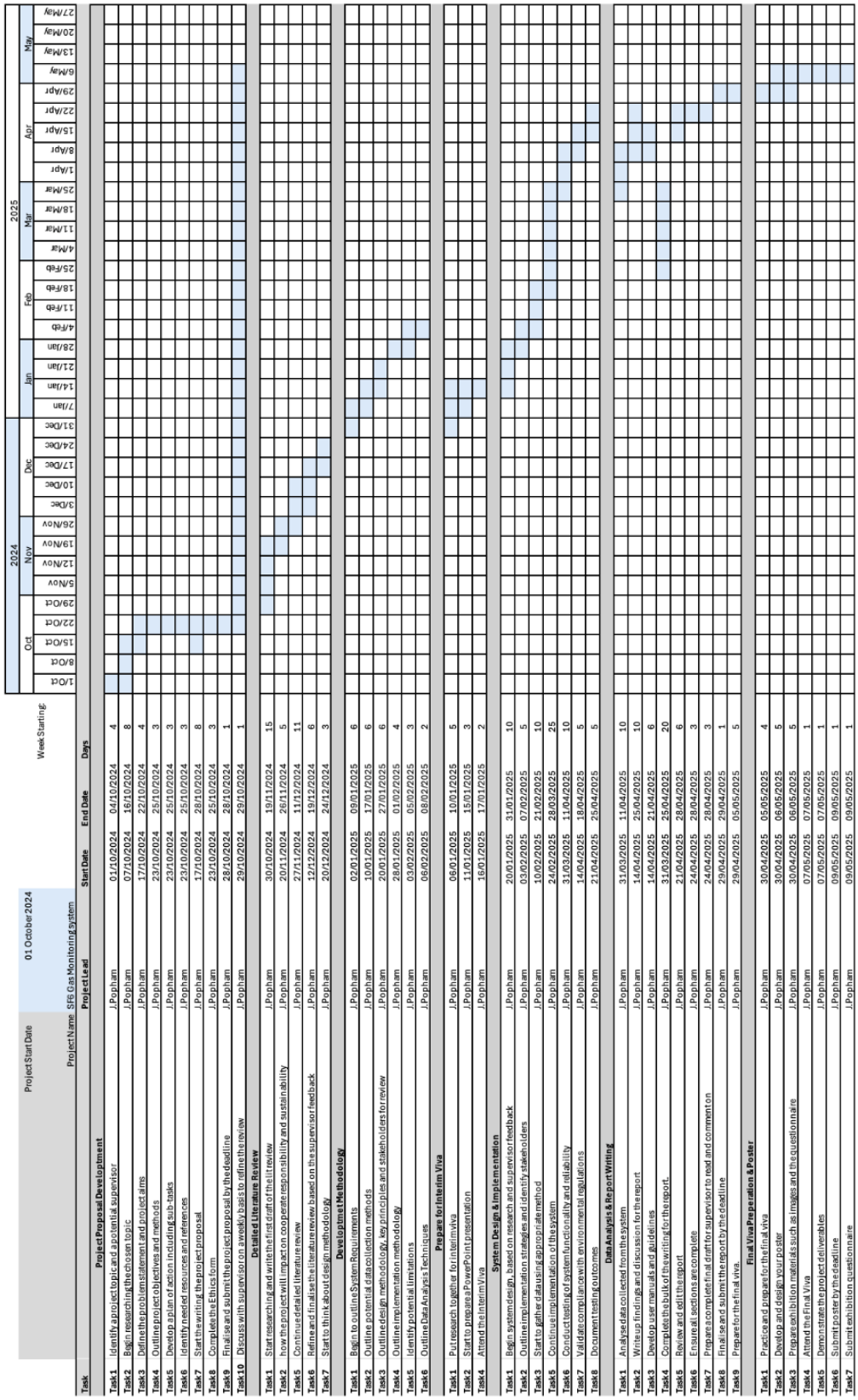

Figure 43: Project Timeline

Appendix B

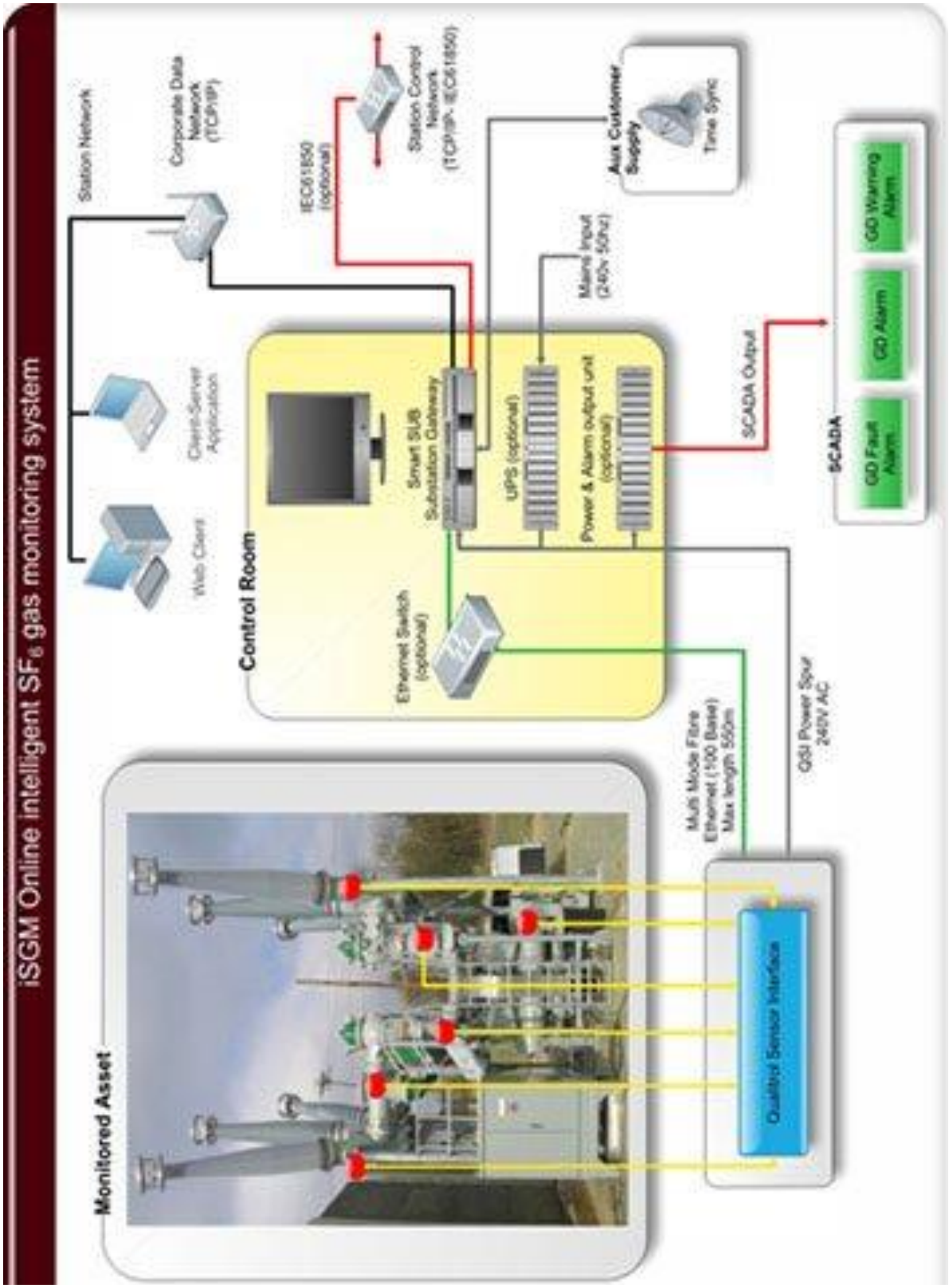

Figure 44: iGSM System [3]

Appendix C

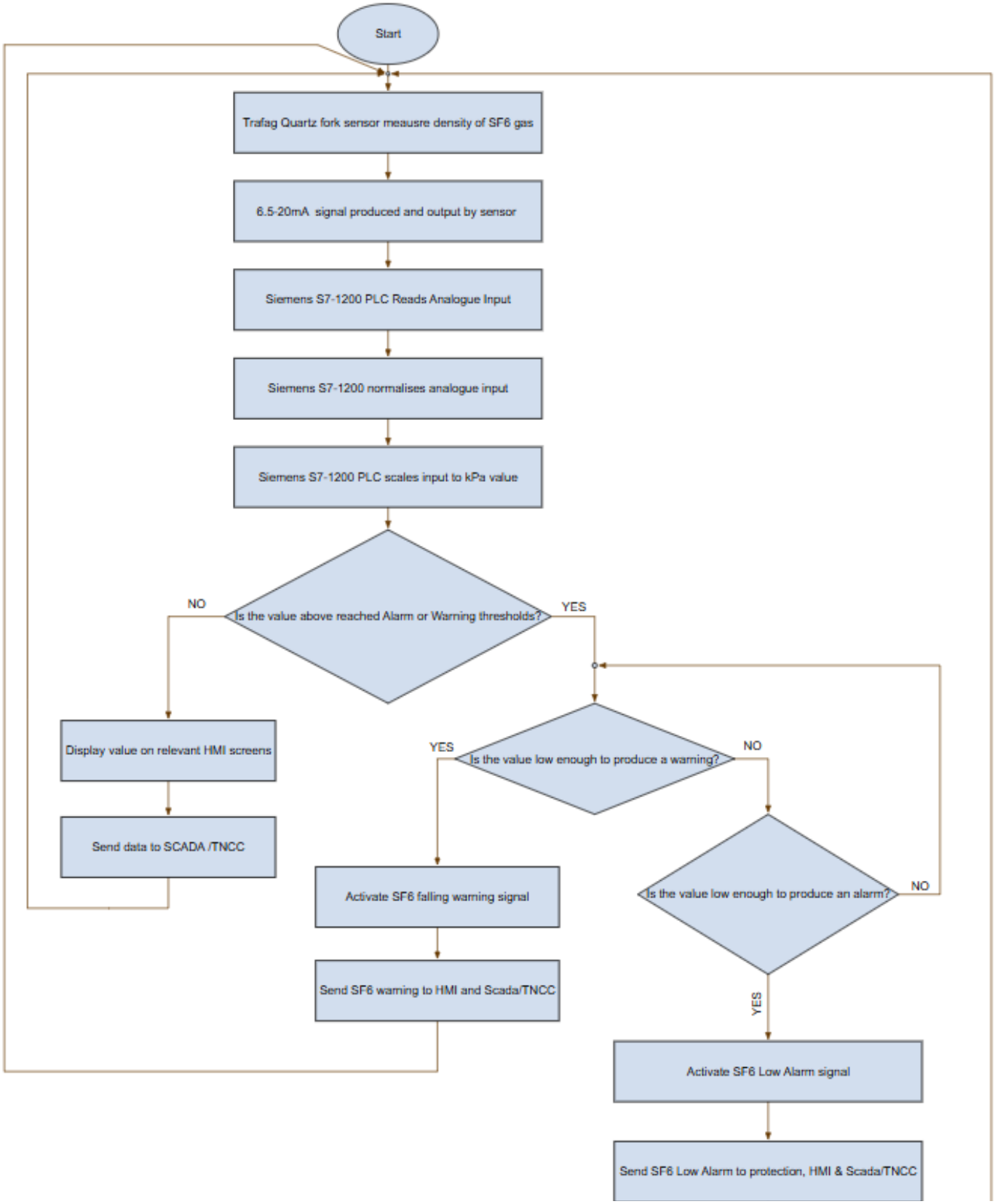

Figure 45: system flow chart

Appendix D

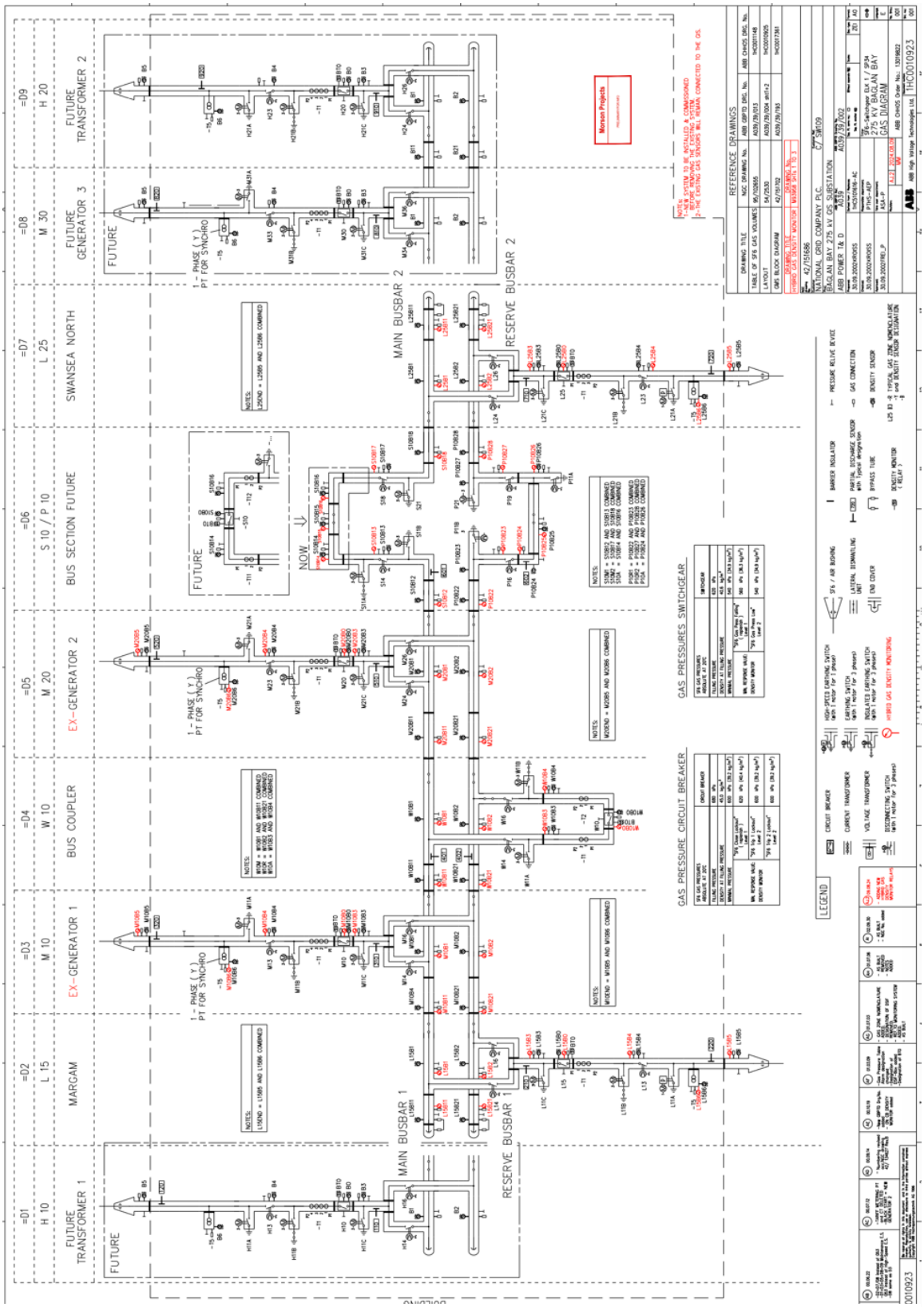

Figure 46: Site sensor position schematic

Appendix E

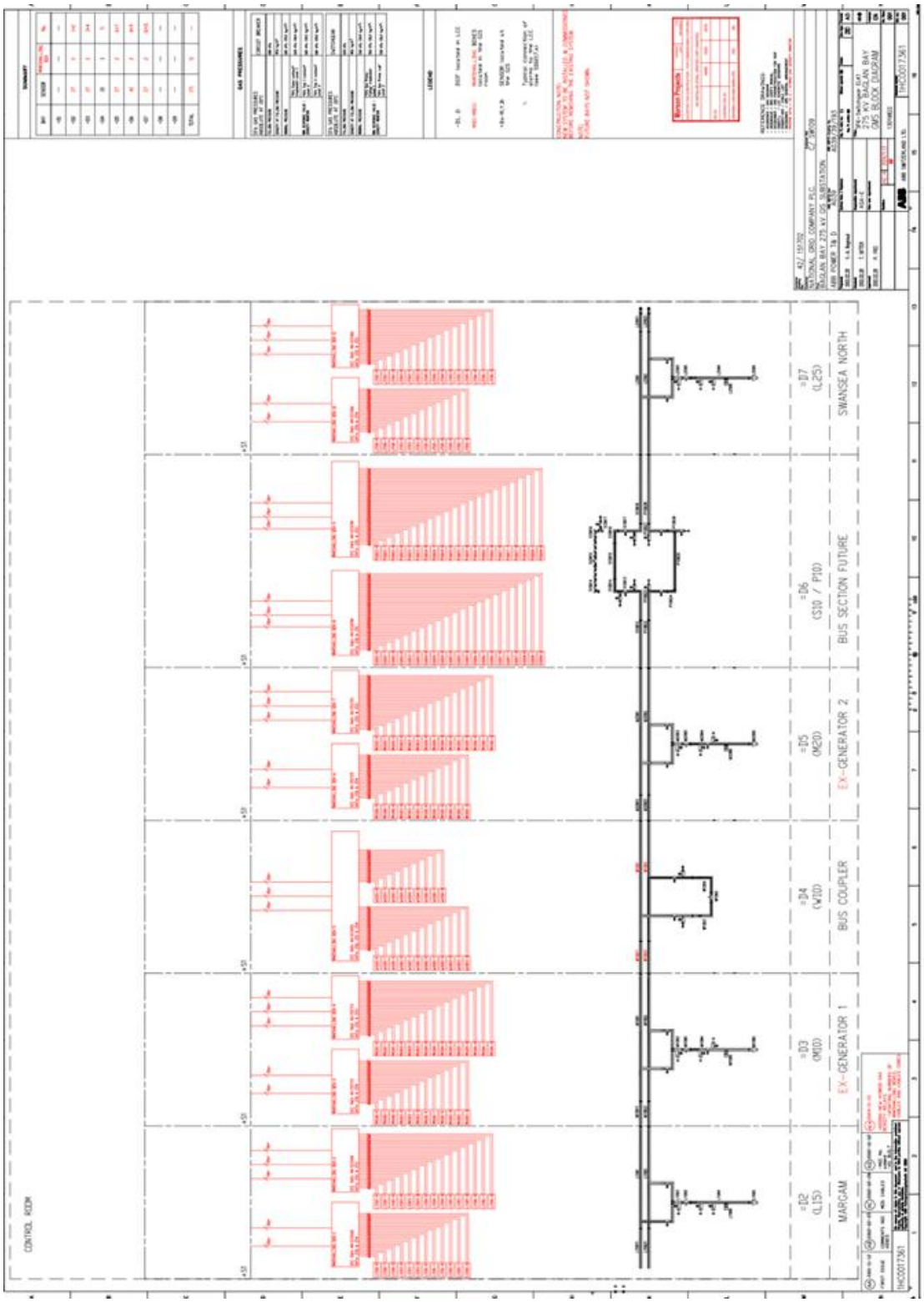

Figure 47: Site sensor to LCC Site Block Diagram