PRIFYSGOL CYMRU
Y Drindod Dewi Sant
UNIVERSITY OF WALES
Trinity Saint David

RESULT

# BACHELORS DEGREE ASSIGNMENT SPECIFICATION

| | | | |
|---|---|---|---|
| **Programme:** | **BEng / MEng Engineering Portfolio** | **School:** | **Schools of Engineering** |
| **Module:** | **Engineering Design** | **Module Level (4, 5 or 6):** | **4** |
| **Module code:** | **M4X01160** | **Contribution to Overall Module Assessment (%):** | **50%** |
| **Lecturer:** | **Richard Morgan** | **Internal Verifier:** | **Pedro Monteiro Ferreira** |
| **Assignment Title:** | **The production of 3D Modelled Components and Assemblies** | **Assignment No (x of x):** | **1 of 2** |
| **Hand Out Date:** | **16/07/18** | **Submission deadline:** | **18/07/18 (supervised lab session)** |

| | | |
|---|---|---|
| **Turnitin:** Lecturer to tick to indicate if an electronic version of the assignment must be submitted to Turnitin. Note: the Turnitin version acts as a receipt for the student. | **YES** | √ |
| | **NO** | |
| **Hard Copy:** Lecturer to tick to indicate if printed version of the assignment is required. If a hard copy is required please submit the assignment parts in a suitable report folder– not in polypockets. | **YES** | |
| | **NO** | √ |

| **Learning Outcomes tested (from module syllabus)** | **Assessment Criteria To achieve each outcome a student must demonstrate the ability to:** |
|---|---|
| Demonstrate skills in communicating the design, material and manufacturing of products through the preparation and reading of Engineering Drawings to BS8888 through the medium of 2D and 3D CAD tools. | • identify the key features of a computer-aided design system<br>• use computer-aided design software to prepare a design drawing<br>• demonstrate an understanding of the principles of computer-aided design. |

| | |
|---|---|
| **Referencing:** | In the main body of your submission you must give credit to authors on whose research your work is based. Append to your submission a reference list that indicates the books, articles, etc. that you have read or quoted in order to complete this assignment (e.g. for books: surname of author and initials, year of publication, title of book, edition, publisher: place of publication). |
| **Declaration:** | **The following declaration is to appear at the top of the first page of your Turnitin submission:**<br><br>I declare that this assignment is all my own work and that I have acknowledged all materials used from the published or unpublished works of other people. All references have been duly cited. |

- **Please DO NOT attach this form to your Turnitin submission or it will match many similarities with other students' submissis.**

# TASK DESCRIPTION

Computer Aided Design (CAD) is used extensively throughout many industries. Although two-dimensional CAD software is still appropriate for some applications, the use of three dimensional solid modelling and assembly applications are widespread across a number of engineering sectors. In this assignment you will gain experience in using a Computer Aided Engineering Solid Modelling package in the production of three dimensional solid models of components and assemblies.

**Task 1**

Using the SolidWorks Computer Aided Engineering software, create a solid model of the **'Sliding Jaw'** based on the geometry and dimensions outlined in the technical drawing provided on Moodle (Sliding Jaw .pdf)

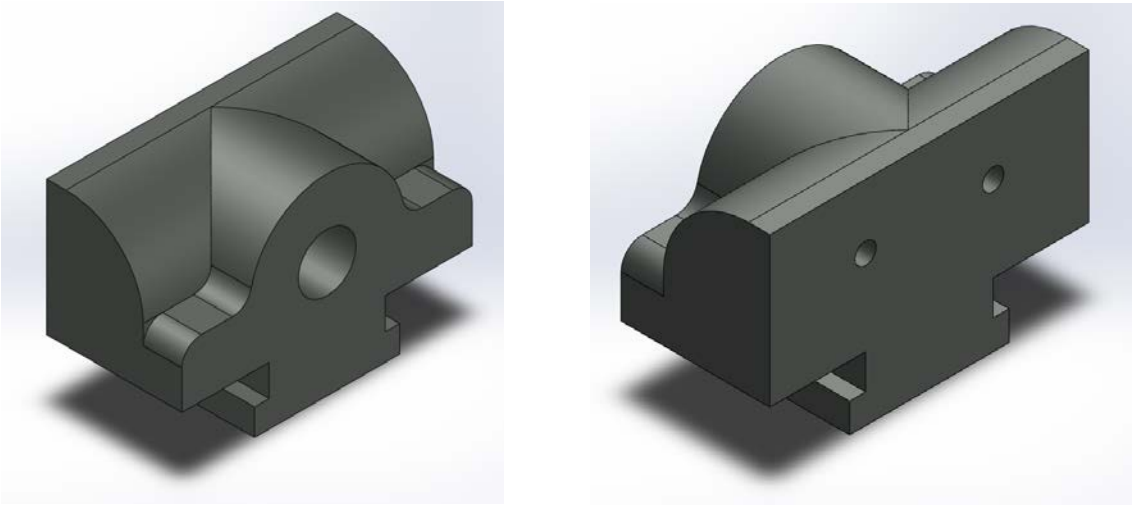

3D Images of the 'Sliding Jaw' (technical drawing available on Moodle)

(35 Marks)

**Task 2**

Using the SolidWorks Computer Aided Engineering software, you are required to construct an assembly of the following parts:

- Base
- Bush
- Handle Lever
- Jaw Plate
- Screw Shaft
- Sliding Jaw

The **Base**, **Bush**, **Handle Lever, Jaw Plate** and **Screw Shaft** geometry have already been modelled and should be downloaded from Moodle as separate part (.SLDPRT) files.

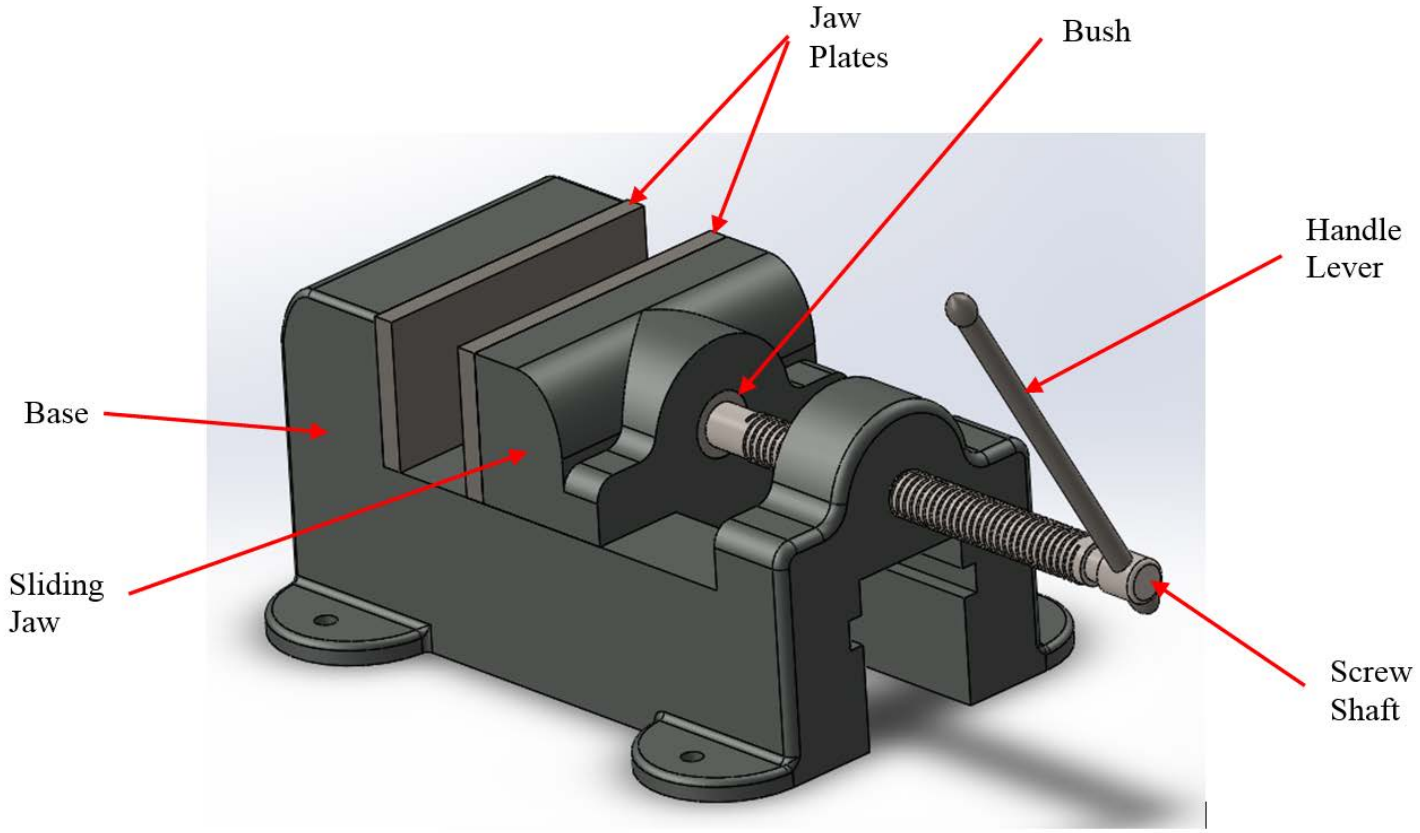


Use the **Sliding Jaw** model which you developed in **Task 1**. You are required to position and constrain each of the components within the assembly in order that the inter-part assembly geometry represents that of a vice. A motion simulation clip is available on Moodle to clarify the desired inter-part geometry (Vice Motion .avi).

(35 Marks)

**Task 3**

Model a component (of your choosing) to sit in the vice. This may be similar to one of the components you've modelled previously or could be a new geometry. Aim to demonstrate:

- The use of a wide range of modelling tools and strategies
- The ability to develop complex features / part geometry
- The ability to apply efficiency in the modelling process

(30 Marks)

# GUIDANCE FOR STUDENTS IN THE COMPLETION OF TASKS

*(Lecturer – please insert guidance for students here. Please link the task to the five common assessment criteria overleaf)*

- You are to begin and finish your modelling activity in a single, session lasting no longer than two hours. However, you may practice and prepare for your assessment activity beforehand. Completed models/assemblies should be uploaded to the 'CAD Submission' Turnitin link at the end of the assignment lab session in a 'zipped' folder.

- Please keep a copy of your work in your 'My Documents folder'. Please don't amend or re-save any of your assignment part-files once you have finished the lab session as the electronic date-stamp will invalidate files as a verifiable backup of the work completed for the assignment.

- At the end of the assignment lab session, please leave all the files open on your PC once they have been saved.

You will be marked on your ability to:

1) Create correct Part Geometry
2) Use a range of appropriate tools when modelling
3) Manage and organise the part structure
4) Create a suitable assembly structure with appropriate mating conditions and degrees of freedom.

It is advised that regular saves are carried out during the lab session in case of IT/software crashes or interruptions.

**Saving Your Work**

Remember that the assembly file along with the files of any parts instanced within the assembly should uploaded to the Turnitin link. Therefore, the files saved onto the CD should look like the list below (not necessarily in order).

- Base
- Bush
- Handle Lever
- Jaw Plate
- Screw Shaft
- P****** Sliding Jaw
- P****** Task 3 Part

**It's advised that regular saves are carried out during the lab session** in case of IT/software crashes or interruptions. It is best to work of the 'C' drive of the machine during the assignment session (create a file in 'My Documents') and then upload a copy the entire 'zipped' file to the Turnitin link once you have finished your work.

# MARKING CRITERIA AND STUDENT FEEDBACK

This section details the assessment criteria. The *extent* to which these are demonstrated by you determines your mark. The marks available for each criterion are shown. Lecturers will use the space provided to comment on the achievement of the task(s), including those areas in which you have performed well and areas that would benefit from development/improvement.

| **Assessment Criteria Applied** | **Marks available** | **Marks awarded** |
|---|---|---|
| **1. Part Modelling from a Technical Drawing** | | |
| This task will be assessed by evaluating the your ability to interpret the engineering drawing provided to develop an accurate solid model of the 'Sliding Jaw' | 35 | |
| **2. Assembly Development** | | |
| This task will be assessed by evaluating your ability to use assembly definition tools to build a digital representation of the vice assembly. You should aim to develop an assembly which represents the static and dynamic relationships which exist between the vice components. | 35 | |
| **3. Free Part Modelling** | | |
| Develop part geometry of a component to be sited in the vice. You should aim to:<br>• Use of a wide range of modelling tools and strategies<br>• Demonstrate the ability to develop complex features / part geometry<br>• Apply efficiency in the modelling process (efficient use of sketches and features). | 30 | |

# Student Self Evaluation Form

| | | | |
|---|---|---|---|
| **Student name:** | | **Student P number:** | |
| **Programme:** | | **Year of programme** | **1 (level 4)** |
| **Assignment Title:** | **The production of 3D Modelled Components and Assemblies** | | |

This section repeats in brief the common assessment criteria detailed on previous pages. The *extent* to which these are demonstrated by you determines your mark. Using these criteria, tick the box that best indicates the level of achievement you feel you have achieved with regard to each of them.

**If completed return the Student Self-Assessment Feedback form separately to your module tutor by email using your student email account. Do not add it to your assignment.**

| **Common Assessment Criteria Applied** | **Level of Achievement** | | | | | | |
|---|---|---|---|---|---|---|---|
| | **REFER** | | **3rd** | **2:2** | **2:1** | **1st** | **1st** |
| | OUTRIGHT FAIL | UNSATISFACTORY | SATISFACTORY | GOOD | VERY GOOD | EXCELLENT | EXCEPTIONAL |
| **1. Part Modelling from a Technical Drawing** | 0-29% ☐ | 30-39% ☐ | **40-49%** ☐ | **50-59%** ☐ | **60-69%** ☐ | **70-79%** ☐ | **80-100%** ☐ |
| **2. Assembly Development** | 0-29% ☐ | 30-39% ☐ | **40-49%** ☐ | **50-59%** ☐ | **60-69%** ☐ | **70-79%** ☐ | **80-100%** ☐ |
| **3. Free Part Modelling** | 0-29% ☐ | 30-39% ☐ | **40-49%** ☐ | **50-59%** ☐ | **60-69%** ☐ | **70-79%** ☐ | **80-100%** ☐ |

| **PLEASE COMMENT ON AREAS IN WHICH YOU FEEL THAT YOU HAVE PERFORMED WELL** | **PLEASE COMMENT ON AREAS YOU FEEL THAT YOU NEED TO DEVELOP** |
|---|---|
| | |