University of Wales Trinity Saint David
School of Engineering

AWD Torque Vectoring

Advanced Vehicle Dynamics

Nicholas David Thomas

1702567

20/05/2020

Contents

1 Introduction 1

2 Base Data 1

3 Torque Vectoring Systems 1

4 Lumped Mass Model (4-9) 3

5 Torque Transfer (10) 5

6 Torque Capacity (11) 6

7 Longitudinal acceleration (12) 9

8 Potential Yaw Increase (13) 10

9 Control Systems (14) 12

9.1 Types of sensors needed for torque vectoring 12

9.2 How the AWD system affects vehicle dynamics 12

10 Summary 14

11 References 15

12 Appendices 17

12.1 Appendix A 17

12.2 Appendix B 18

1 Introduction

The Ferrari FF is a four-wheel drive GT car which was first released in 2011. It is a front to mid-engine car which has a rear transaxle which is connected to the engine via a single driveshaft with an F1 dual clutch gearbox (Ferrari, 2020). This report will investigate this car and look into the vehicle's novel 4wd system, handling characteristics, its torque vectoring and some of its control systems.

2 Base Data

Table 1- Base Vehicle Data

Wheelbase	2990mm
Front Track	1676mm
Rear Track	1660mm
Kerb Weight	1880kg
Weight Distribution	47% front-53%rear
Engine Type	V-12 65°
Maximum Power	486kW @8000rpm
Maximum Torque	683Nm@6000rpm
Electronic Aids	ABS/EBD,ESC,4RM

3 Torque Vectoring Systems

Torque vectoring generally come in two types, brake and active differential based. The aim is to redistribute the torque coming from the engine between wheels so as to maximise the torque to help turn the car (Chen, et al., 2017). This can be used in a variety of ways such as for safety if the car is going out of control it can assist to regaining stability or it can be used for quicker cornering. It is based around when weight transfer loads one tyre more than the other, so the outside wheel has the ability to provide more traction. The first type which is generally simpler to implement and less expensive is brake based. This limits the torque on the heavily loaded outside wheel to the same as the inner lightly loaded wheel. This increases the total torque on the outside wheel so that the open differential sends more torque there so that the available torque is used better. This is good as it increases the yaw moment, but performance wise it is a negative as it is slowing the car down.

The second type is an active differential. This is a much more expensive method as complicated gearing and extra parts need to be added rather just an extra piece of software and perhaps one or two parts. So, this variation is generally only seen in high end 'performance' cars. Depending on system is, it changes the amount of torque going to the

outside wheels generally through a set of clutches (Crosse, 2019). It moves extra torque to the outside wheel around a corner which without slowing the other wheel down means that the car can have a higher yaw moment. This helps with cornering without having to waste as much energy. It is able to do this as the outside wheel has a much larger normal force acting on it from weight transfer. This means that it has a greater friction coefficient which can then create a larger lateral acceleration without losing traction. This is also sometimes used with the brake system as well.

The key with the software's in both cases is to make sure that the tyres stay within its slip curve. This is the amount of slip angle the tyre can produces for a given load. As can be seen below it rises and begins to fall so the key is to keep it at its optimal amount. If the tyre does go out of this slip curve, then the tyre will begin to lose traction and then the car can begin to skid. Another key part is also keeping the tyre in its frictional ellipse. This is the maximum force which can be put through a tyre before it starts losing grip. The aim is to keep the tyre from doing too many things at once which may lead the tyre to going out of the frictional ellipse. An example of this could be braking heavily whilst cornering. This all does change with other factors such as tyre temperature and pressure so a margin of safety must be built in to comply with differing conditions or be adaptable to the changing conditions. This is all much easier to do with electric cars with independent motors as designer just need to change the software rather than adding clutch packs and gearsets.

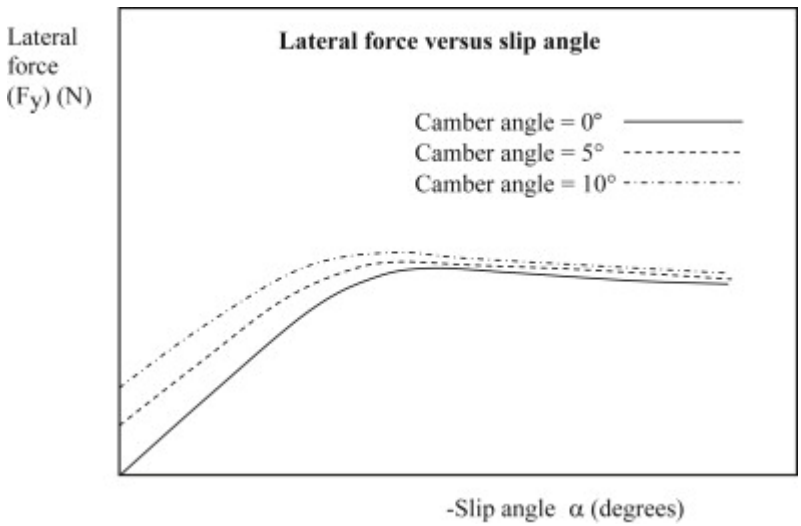

Figure 1-Slip Curve (Blundell & Harty, 2015)

4 Lumped Mass Model (4-9)

A lumped mass model is when a vehicles mass is all measured down to a number of points. These values and their positions can then be used to calculate some fundamental parameters about the vehicle such as inertia and weight transfer. From the base vehicle data, the weight distribution is 47:53 to the rear. Assuming the lateral weight distribution is 50:50 the front tyre mass is 441.8kg (4334.058N) and the rear is 498.2kg (4887.342N). Then using the below equation, the centre of mass was found.

$$CoG\ from\ Rear = Total\ Length \times \left(\frac{Load\ front}{Total\ Load}\right)$$

Equation 1- CoG Position

Without any passengers the author found it to be 1.4053m from the rear axle. Using this the author then developed the model whilst making some assumptions of the location and mass of some key parts. These parts were the heavier items within the car such as the gearbox and engine which can cause a large effect on the handling ability of the car (see below). Using these and the weight distribution the author calculated the inertia.

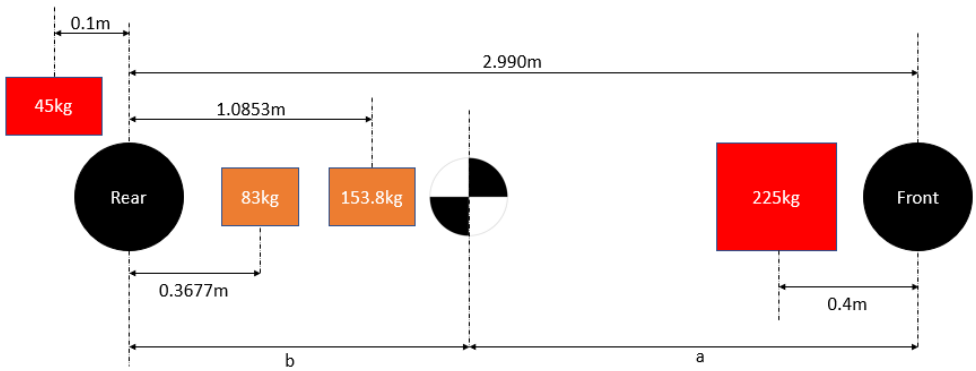

Figure 2- Mass Distribution of Ferrari FF

$$I = \sum Mx^2$$

Equation 2-Rotational Inertia

Using this the author gained a value of 4003.19kgm for the inertia. This value is what is expected as it is below the value of the Chrysler Grand Voyager (4651.5kgm) which has a 0.1m smaller wheelbase, but it is also heavier by 100kg. Then using the inertia, the author found the inertial conjugate or centre of percussion. This is the point at which no translation occurs when loaded in a direction which does not pass through the centre of gravity (Blundell & Harty, 2015). This can also be seen at the point at which the body rotates about. This is

quite important as this can define how a car reacts in a corner. Then in turn the author could then find the dynamic index. This is the relationship between the distance between the centre of percussion and the rear axle. This can be either side of the rear axle and can have a big effect on the handling of the vehicle. A dynamic index less than 1 is in front of the rear axle and greater than 1 is behind the rear axle. Typical 'sporty' feeling vehicles are between 0.9 and 0.92 such as a Mazda MX-5 or a Lotus Elan. But is it important to not have too low of a DI as it could make the car feel twitchy and react too fast even for the best of drivers (Bastin, 2014). With no passengers the author gained a value of 0.956. This make sense as it is designed to be a GT car which can be a bit sporty but still easy to handle. So, to overcome the higher DI it could use the torque vectoring system. The value for the inertial conjugate is 1.34m.

The author then recalculated these values with added passengers. First were two adult passengers in the front seats with a combined mass of 153.8kg and then with two 'child' passengers totalling 83 kg in the rear seats.

Table 2- Inertia Response to Passenger

	No Passenger	2 Passengers	4 Passengers
Cog from front (m)	1.5847	1.604	1.644
Weight Distribution front %	47	46.35	45
Inertia (Kgm^2)	4003.19	4017.097	4096.53
Inertial Conjugate (m)	1.34369684	1.231401595	1.177157298
DI	0.956163695	0.888457139	0.874559657

As can be seen as the added mass that is slightly behind the centre of gravity, so it brought the overall centre of gravity rearwards by 0.65%. This added mass also has an effect on the inertia. With the new centre of gravity, the inertia also increases slightly which is expected as there is more mass to rotate. But what is interesting is how large effect on the DI it has. This will be because of the increase in mass in front of the real axle it is going to bring the centre of percussion forward and therefore decrease the DI.

Adding even more mass with the extra passenger just increases the effect of extra mass by changing the values even further with the DI going down all the way to 0.87. This could possibly give the car a twitchier feeling as the DI as the lower the DI the more the car is sensitive to steering input. However, this added sensitivity can be combated by the torque vectoring system within the car so that the car it still manageable by your average driver.

5 Torque Transfer (10)

The Ferrari FF has a different approach to transferring torque to the two axles compared to the more 'traditional' method.

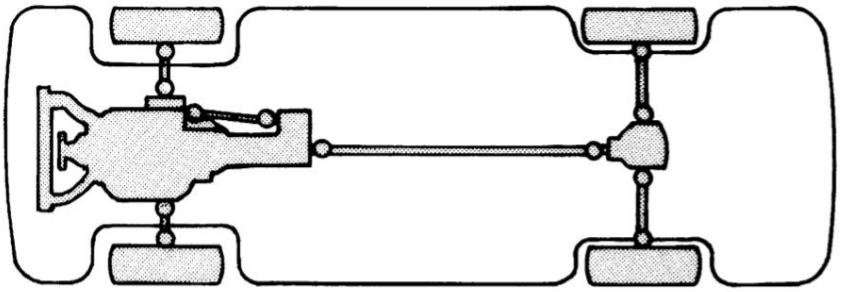

Figure 3- Traditional 4WD system (Hillier & Coombes, 2004)

As can be seen the more traditional system has the power comes out of the rear of the engine where is gets split off from the main shaft using a transfer case. This then sends the power back to the front wheels. This is a very heavy system which can have quite large mechanical losses.

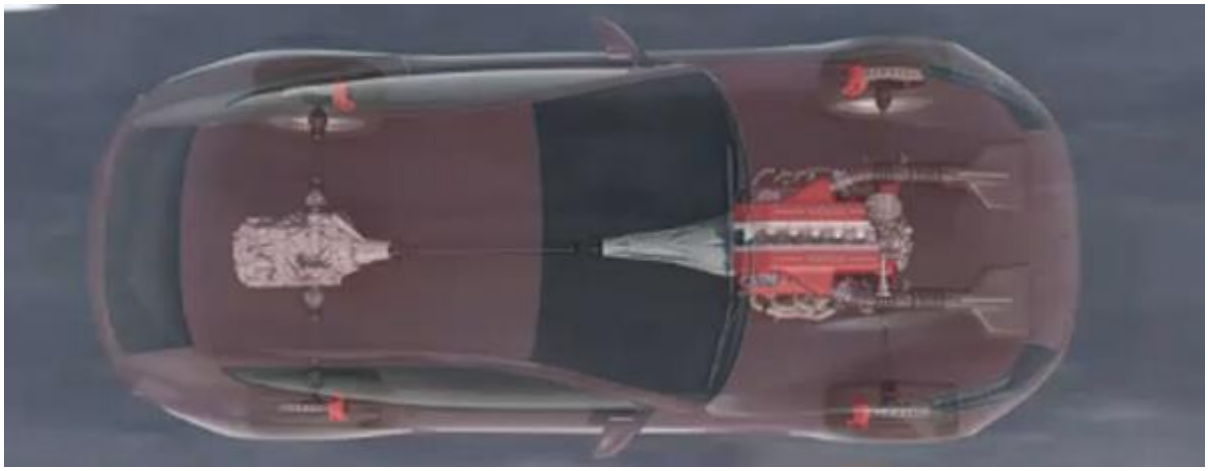

Figure 4-Ferrari FF AWD system (Ireson, 2011)

The Ferrari has a traditional power output from the rear of the engine going to the rear axle where there is a gearbox and Ediff to distribute the torque so as to optimise the torque usage. However, at the front of the engine there is a secondary gear box coming off the crank shaft. This has two gears in it, gear one is in use when the main gear box is in one or two and the front is in the 2nd gear then the rear is in 3rd and 4th. As the car should be going at cruising speed in 5th and 6th there is not much need to have front wheel drive at this point. Once the torque has gone through the gears it gets split through a differential where it is met by a clutch pack on either side. By controlling the amount of slip that the clutches are going through this controls how much torque is being transferred to each wheel individually. It does mean that

the clutches are always slightly slipping, which can wear them out quickly as the rear wheel speed is higher than the output speed of the front gearbox. Not only does this give very good control of the 4wd system but it is also about 50% lighter than a traditional system (Ferrari, 2020), so it has better performance that way. The way the torque is split front to rear is that 20% goes to the front and 80% goes to the rear. So, the car is still mainly a rear wheel drive sporty feeling car but when it needs it, it has the more stable feel of a 4wd car. It also helps with high acceleration on low grip surfaces by changing the amount of torque on each wheel so that it is maximised without the wheels spinning. The user can also potentially turn the front wheel drive off completely when they want to just have a rear wheel drive car.

6 Torque Capacity (11)

The author found the torque capacity by first using the gear ratios, then finding the rear wheel speed of the car when at 6000rpm. Using this and the information about that the first gear in the front box is 6% taller than 2nd gear in the rear and 2nd gear in the front is 6% taller than 4th in the rear (Edmunds, 2011), calculated the wheel speed of the front wheels. Then the author calculates the ratio which he then multiplied by the incoming torque. For the front it is receiving 20% of the total torque, so each clutch pack is receiving 10% of the total torque.

Table 3-Torque Output to Front Wheels

Gear rear	Rear Ratio	Final Drive Ratio	Overall Ratio	Rear wheel speed 6000rpm	Front gear box out-put @6000 RPM	Front Ratio	Max Torque Capacity front Nm
1	3.4	4.38	14.892	67.15014773	111.0133635	9.007924528	615.24125
2	2.18	4.38	9.5484	104.7295882	111.0133635	9.007924528	615.24125
3	1.63	4.38	7.1394	140.0677928	187.6039786	5.330377358	364.06477
4	1.29	4.38	5.6502	176.9848855	187.6039786	5.330377358	364.06477
5	1.03	4.38	4.5114	221.6606818	0	0	0
6	0.84	4.38	3.6792	271.798217	0	0	0

Then using this the author could work out the power loss. Using the difference in rpm and the torque the maximum power loss at the front clutch packs could be found.

Table 4-Power Loss Across Front Clutch

Gear rear	Difference in rpm	Power loss W	Power loss kW
1	43.86322	2826.015	2.826015
2	6.283775	404.8505	0.404851
3	47.53619	1812.306	1.812306
4	10.61909	404.8505	0.404851
5	0	0	0
6	0	0	0

The author could then make some assumptions to find the axial force application of the clutch. This can be done in two different methods, constant wear, and constant pressure. Constant wear assumes that the wear at any location is proportional to the pressure and the velocity of the clutch. Then constant pressure assumes that every point on the clutch surface is subjected to the maximum pressure that is designed for the clutch material. In this case from the supplementary material the author assumed that the clutch was a carbon fibre wet clutch. This has a mue value of between 0.05-0.1 (School of Automotive Engineering UWTSD, 2020) and the dimensions were assumed as set out below.

Table 5- Assumptions of Clutch Pack

Outer Radius (r_o)	0.12
Inner Radius (r_i)	0.05
Mue coefficient (μ)	0.1
No. of plates (n)	6

Constant wear

$$F = \left(\frac{2 \times T}{\mu \times (r_o + r_i)}\right) \times n$$

Equation 3- Constant Wear Theory

Constant pressure

$$F = \left(\frac{3 \times T \times ({r_o}^2 - {r_i}^2)}{2 \times \mu \times ({r_o}^3 - {r_i}^3)}\right) \times n$$

Equation 4- Constant Pressure Theory

Table 6- Axial Force Across Front Clutch

Gear rear	Axial Force Uniform wear N	Axial Force Uniform Pressure N
1	6031.777	5709.116
2	6031.777	5709.116
3	3569.262	3378.33
4	3569.262	3378.33
5	0	0
6	0	0

These values seem reasonable as comparing to values with (AP Racing, 2020) they were getting ever so slightly lower values for some of there clutches however , these are not exactly the same clutches with the assumptions that the author had used.

7 Longitudinal acceleration (12)

The author first found the maximum acceleration of the car if it were limited by the power of the engine with 4 passengers as outlined earlier. He did this by using the torque output calculated previously and then using the wheels rolling radius (0.254m) found the maximum tractive force. Then dividing by the total mass found the acceleration.

Table 7-Maximum Acceleration Limited by Engine

Gear	Max force front wheels	Max force rear wheels	Total tractive force AWD	Max accel AWD	Max Accel rear only
1	1723.365	11396.34	13119.71	6.197897	5.38376
2	1723.365	7307.067	9030.432	4.266077	3.45194
3	1019.789	5463.541	6483.33	3.062798	2.581038
4	1019.789	4323.907	5343.696	2.524422	2.042662
5	0	3452.422	3452.422	1.630963	1.630963
6	0	2815.567	2815.567	1.330105	1.330105

The author then looked into the maximum acceleration of the car limited by the road surface. He used a number of road surfaces and assumed their coefficient of friction (HP wizard, n.d.). Using the tyre loads then multiplying it by the mue value and dividing by total mass the maximum acceleration could be found.

Table 8- Maximum Acceleration Limited by Road Surface

Surface	Mue	Tractive Force Front N	Tractive Force Rear N	Total Tractive Force with Front N	Total Tractive Force Just Rear N	Max Accel with Front m/s/s	Max Accel without Front m/s/s
tarmac	1	4672.307	5710.597	20765.81	11421.19	9.81	2.69775
wet tarmac	0.85	3971.461	4854.008	17650.94	9708.015	8.3385	2.293088
gravel	0.66	3083.722	3768.994	13705.43	7537.988	6.4746	1.780515
Ice	0.1	467.2307	571.0597	2076.581	1142.119	0.981	0.269775

As can be seen in some cases the author found that the maximum acceleration is limited by the engine where in others it is the road surface. So, the author found the actual maximum acceleration on a surface whether it is limited by engine or tyre friction.

Table 9- Maximum Acceleration on a Number of Surfaces

Surface	Max Accel with Front m/s/s	Max Accel without Front m/s/s	% Difference
tarmac	6.197897	2.69775	43.52686
wet tarmac	4.266077	2.293088	53.75167
gravel	3.062798	1.780515	58.13361
Ice	0.981	0.269775	27.5

What is interesting is how much of a difference including the front wheels does to the acceleration. This is because the car is able to put significantly more tractive effort in as there are more wheels driving the car along. This is exasperated by the fact that the amount of torque can be varied so that the optimum drive is being used without the wheels spinning.

8 Potential Yaw Increase (13)

The author also calculated the potential yaw increase of the torque vectoring system. He assumed that 100% of the torque went onto the outside wheel of the car which create a torque moment. The author found that with the added front wheels there was a maximum increase of 17.9 °/s when the system was in use. This would mean that reduced amount of hand wheel turn would be needed.

Table 10- Potential Yaw Gain using the AWD System

Just rear Wheel Drive			AWD		
Yaw moment Just rear	Yaw gain rads/s	Yaw gain °/s	Yaw Moment AWD	Yaw Gain Rad/s	Yaw gain °/s
14031.5	3.425216066	196.2504	15312.48	3.737914	214.1667
8996.668	2.196167948	125.8312	10277.64	2.508866	143.7474
6726.866	1.642088879	94.08476	7484.875	1.827126	104.6866
5323.716	1.299567272	74.45972	6081.725	1.484604	85.06155
4250.719	1.037638985	59.45233	4250.719	1.037639	59.45233
3466.606	0.846229852	48.4854	3466.606	0.84623	48.4854

Assuming that every degree of slip angle needs 500N the author could then find how much the road wheels need to turn and therefore the hand wheel rotation. Then through this the author found that adding the front wheels meant that there could be 55° less turn needed on the handwheel when using the front wheels. This could further be increased if the other side

wheels are braked slightly to increase the yaw moment further. There is a limit though as too much yaw and the tyres will break traction and will spin this is where the control systems come in.

Table 11- Change in Handwheel movement for Yaw Gain

RWD				AWD			
Lat force a front wheels	Slip angle	required wheel travel	hand wheel movement	Lat force at front wheels	Slip angle	required wheel travel	hand wheel movement
4692.809	9.385618978	0.104285	107.9346182	7115.019	14.23004	0.158112	163.6454397
3008.919	6.01783805	0.066865	69.20513758	5431.129	10.86226	0.120692	124.915959
2249.788	4.499576157	0.049995	51.7451258	3683.114	7.366228	0.081847	84.71162105
1780.507	3.561014259	0.039567	40.95166398	3213.833	6.427666	0.071419	73.91815923
1421.645	2.843290455	0.031592	32.69784023	1421.645	2.84329	0.031592	32.69784023
1159.4	2.318799983	0.025764	26.6661998	1159.4	2.3188	0.025764	26.6661998

9 Control Systems (14)

9.1 Types of sensors needed for torque vectoring

- Handwheel Sensor
- Break Request
- Tyre Pressure Monitoring
- Accelerator request
- Which driving mode selected
- Wheel speed
- Vehicle speed
- Rotational Yaw Rate
- X,Y,Z Acceleration
- Clutch pressure
- Clutch Speed

9.2 How the AWD system affects vehicle dynamics

The torque vectoring system has a large effect on the vehicle dynamics of the car. It can reduce the change in the yaw moment of the vehicle so that it can corner tighter and faster. It also changes the amount of grip being used on each wheel, so it increases handling that way so to optimise the amount of slip angle acting on each wheel. It does this by measuring each wheel speed and then increasing or decreasing individual wheel depending on the yaw rate and accelerations in the XYZ directions. It can also help with accelerating on different mue surfaces. If one side is gripper than the other, then the system will change the torque output to prevent wheel spin or possibly prevent the car from veering to one side.

The AWD system may also interact with other safety systems. One of which could be the ABS as you will want to turn off the system when under heavy breaking. It can also work with the ESP system. Most cars will just use the brakes so that the steering wheel input matches the amount of yaw if the yaw becomes too great. But with the Ferrari it can use the torque vectoring and AWD system to use the yaw moment to get the car under control again. One such of an example where ESP can be used is in double lane changes or when cornering hard. This will use a control algorithm which takes in the inputs from the sensors and decide which is the best way to control the skid. Generally, in ESP it in more of an emergency situation so it will most likely priorities the brakes and perhaps reduce or turn the power off on certain wheels so that the car regains control. The algorithm must also consider the driver inputs. In some cases the system will want to do one thing but the driver another so it must decide which will have priority in a certain situation. For the algorithms to work an accurate model of the car must be

had so that the correct course of action can be used (Mikulas, et al., 2018). These algorithms are generally run on proportional integral and derivative controllers which uses past present and predicted data. These work by taking signals from the sensors and run the algorithms and give out a signal for the output devices such as engine or brakes to use. There are sometimes multiple controllers doing the same thing as fails safes (El Pro Cus, n.d.). Controllers generally keep a value at a certain value. Either side of this value there will be a tolerance and it is the aim of the controller to keep the value within the range i.e. increase or decreasing the brake pressure so that the wheel speed is kept at a certain value.

10 Summary

In summery the Ferrari FF is quite a large car which still has a sporty handling feel. It is also able to drive well on a multitude of surfaces as it has a novel and relatively light 4wd system. This can have an improvement on vehicle handling on different surfaces and on overall performance. It can also increase safety as it keeps the car under control under varying conditions. If looking at European car sales between 2011 and 2018 the FF did not sell particularly well. It was only 6.3% of total Ferraris sold and compared to other cars such as the Aston Martin Rapide (1618 sold), Nissan GTR (4954 sold) and the Porsche Panamera (53524 sold) (carbasesales, 2020) (all European sales). This may be due to the fact the general trend for car sales was turning more into people buying SUV's rather than GT cars for a 'family' car. But it may also be that it was priced much higher than the alternatives being over £100,000 more than the closest being the Aston Martin Rapide. This may be from the added complexity of the gearbox system and the price of the badge. Even by more recent standards of big SUV'S that is still expensive (£227,198-£238,717). It may also be that it did not have the traditional Ferrari market in mind so some of the Ferrari purists would not have bought it. Although the car did have good reviews over it AWD system and handling it was clearly not appealing to that many people.

11 References

AP Racing, 2020. *AP Racing Catalogue Issue 3.* s.l.:s.n.

Bastin, M., 2014. *An Investigation into the Effects of Hybrid Electric Vehicle Power-trains on Ride and Handling,* Warwick: University of Warwick, School of Engineering.

Blundell, M. & Harty, D., 2015. *The Multibody Systems Approach to Vehicle Dynamics.* 2 ed. Coventry: Butterworth-Heinemann.

carbasesales, 2020. *CarSalesbase.com.* [Online]
Available at: https://carsalesbase.com/europe
[Accessed 15 May 2020].

Chen, Y.-f., Chen, I.-M., Chang, J. & Liu, T., 2017. Design and Analysis of a New Torque Vectoring. *Energies*.

Crosse, J., 2019. *Under the skin: the technology behind torque vectoring.* [Online]
Available at: https://www.autocar.co.uk/car-news/technology/under-skin-technology-behind-torque-vectoring
[Accessed 20 April 2020].

Edmunds, D., 2011. All Roads, All-Out, All Year. 06 September.

El Pro Cus, n.d. *Different Types of Microcontrollers are used in Automobile Applications.* [Online]
Available at: https://www.elprocus.com/different-microcontrollers-used-in-automobiles/
[Accessed 17 May 2020].

Ferrari, 2020. *FF.* [Online]
Available at: https://www.ferrari.com/en-EN/auto/ff
[Accessed 15 April 2020].

Hillier, V. & Coombes, P., 2004. *Hillier's Fundementals of Motor Vehicle Technology.* 5th ed. Cheltenham: Nelson Thornes Ltd.

HP wizard, n.d. *HPwizard.com.* [Online]
Available at: http://hpwizard.com/tire-friction-coefficient.html
[Accessed 16 May 2020].

Ireson, N., 2011. *Motor Authority.* [Online]
Available at: https://www.motorauthority.com/news/1056494_yet-more-details-on-ferraris-ff-all-wheel-drive-system
[Accessed 15 May 2020].

Kingston, L., 2018. *What is torque vectoring? PH Explains.* [Online]
Available at: https://www.pistonheads.com/news/features/what-is-torque-vectoring-ph-explains/38379
[Accessed 20 April 2020].

Mikulas, E., Gulan, M. & Tackacs, G., 2018. *Model Predictive Torque Vectoring Control for a Formula Student Electric Racing Car.* Limassol, s.n., pp. 581-588.

School of Automotive Engineering UWTSD, 2020. *Notes on Clutches.* Swansea: s.n.

12 Appendices

12.1 Appendix A

Assumptions and Vehicle Specifications used			
Vehicle Mass	1880kg	4th gear ratio rear	1.29
Wheelbase	2.990m	5th gear ratio rear	1.03
Front Track	1676mm	6th gear ratio rear	0.84
Rear Track	1660mm	Final Drive Ratio Rear	4.38
Longitudinal Mass Distribution	47% front 53% rear	1st gear ratio front	6% taller than 2nd rear
Lateral Mass Distribution	50% 50%	2nd Gear ratio front	6% taller than 3rd rear
Wheel and tyre Diameter	0.508m	Outer Radius of clutch	0.12
Maximum Torque	683Nm	Inner Radius of clutch	0.05
Torque Split Front Rear	20% Front 80% Rear	Mue coefficient of clutch	0.1
No of Gear	6+Reverse	No. of plates in clutch	6
Mass of Front Passengers	153.8kg	Mue coefficient of dry tarmac	1
Mass of Rear Passengers	83kg	Mue coefficient of wet tarmac	0.85
1st gear ratio rear	3.4	Mue coefficient of ice	0.1
2nd gear ratio rear	2.18	Mue coefficient of gravel	0.66
3rd gear ratio rear	1.63	Steering Ratio	11.5

12.2 Appendix B

Equations Used

$$CoG\ from\ Rear = Total\ Length \times \left(\frac{Load\ front}{Total\ Load}\right)$$

$$I = \sum mx^2$$

$$Inertial\ Conjugate = \frac{I}{M \times a}$$

$$DI = \frac{I}{M \times a \times b}$$

$$Power\ Loss = T \times \omega$$

$$Constant\ wear\ theory\ T = \frac{F\ \mu\ (r_o + r_i)}{2}$$

$$Constant\ Pressure\ Theory\ T = \frac{2}{3}\mu\ F\ \frac{({r_o}^3 - {r_i}^3)}{({r_o}^2 - {r_i}^2)}$$