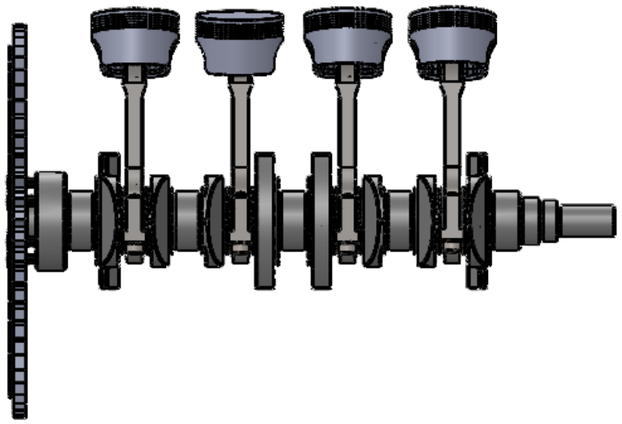

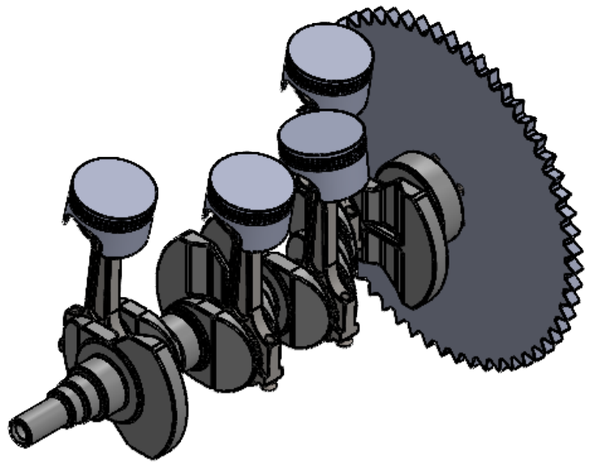

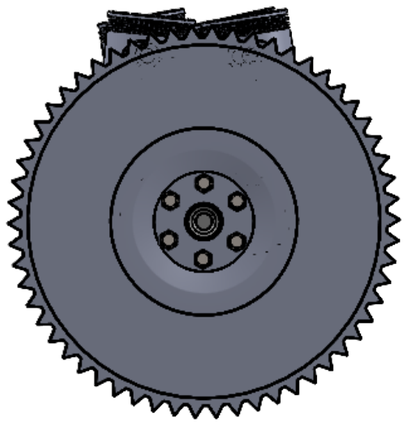

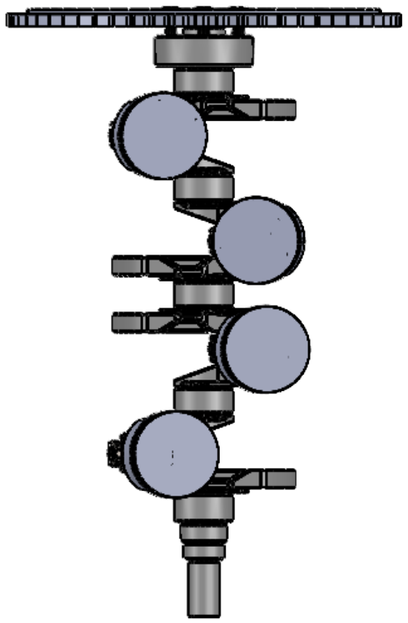

ITEM NO.	PART NUMBER	DESCRIPTION	QTY.
1	Crankshaft		1
2	flywheel		1
3	B18.2.3.2M - Formed hex screw, M8 x 1.25 x 30 --30WS		6
4	piston assembly		4
5	B18.3.1M - 8 x 1.25 x 30 Hex SHCS -- 30SHX		6

UNLESS OTHERWISE SPECIFIED:
DIMENSIONS ARE IN MILLIMETERS
SURFACE FINISH: Shaded With Edges
TOLERANCES:
LINEAR:
ANGULAR:

FINISH:

DEBURR AND BREAK SHARP EDGES

DO NOT SCALE DRAWING

REVISION

	NAME	SIGNATURE	DATE
DRAWN	Sam Cashell		07/12/21
CHK'D			
APPV'D			
MFG			
Q.A			

TITLE:

MATERIAL:

WEIGHT:

DWG NO. Final Assembley

A3

SCALE:1:5

SHEET 1 OF 1

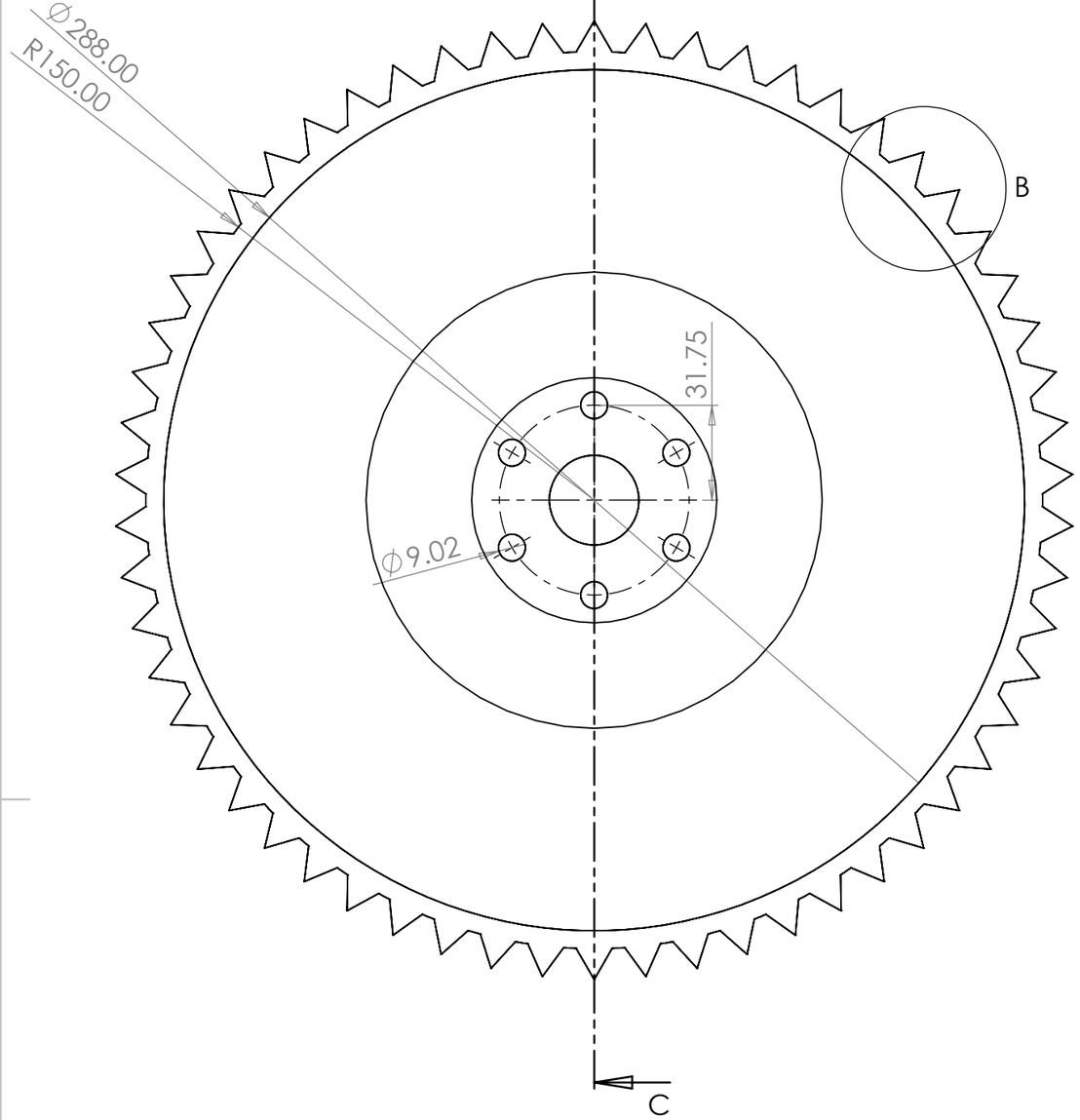

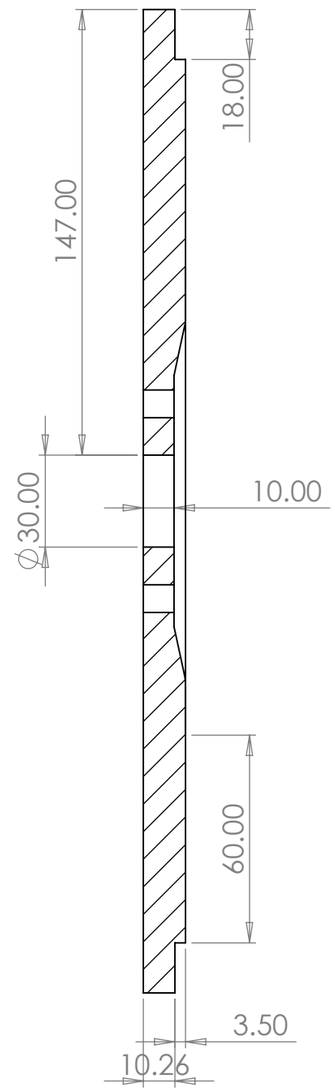

SECTION C-C

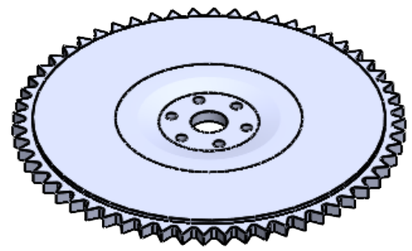

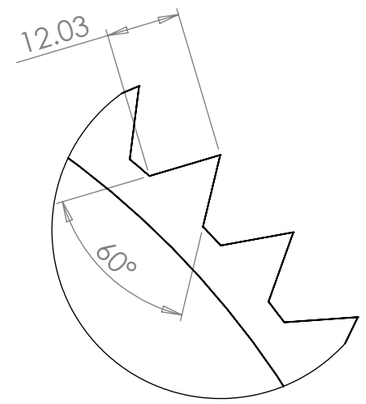

DETAIL B
SCALE 1 : 1

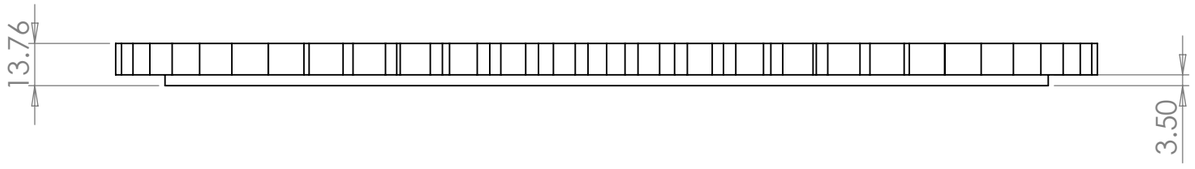

UNLESS OTHERWISE SPECIFIED: DIMENSIONS ARE IN MILLIMETERS SURFACE FINISH: TOLERANCES: LINEAR: ANGULAR:	FINISH:			DEBURR AND BREAK SHARP EDGES	DO NOT SCALE DRAWING	REVISION
	NAME	SIGNATURE	DATE		TITLE:	
DRAWN						
CHK'D						
APPV'D						
MFG						
Q.A				MATERIAL:	DWG NO. flywheel drawing	A3
	Sam Cashell		06/12/21			
	2004364			WEIGHT:	SCALE:1:2	SHEET 1 OF 1