Management Innovation and Sustainability

Group Assignment

M5X01176

Team: Mathew Isn't Here

Adam Sheppard	1909576		
Joseph Garland	1707750	Matthew Ford	1903400
Leon Knight	1909571	Rhodri Williams	1910918
Lewis Christopher	1909572	Tom Blizzard	1402861

Contents

Introduction	**2**
Team roles	**3**
– Introduction	4
– Belbin's Team Roles	5
– Maslow's Hierarchy of Needs	7
– Mintzberg Theory	8
– Our Team	10
– Conclusion	11
Co-ordination Tools	**12**
– Gantt Chart	13
– Meeting Logbook	14
– Critical Path Analysis	15
– Procedures	16
– Summary and Comparison	17
Decision Criteria	**18**
– What are Decision Criteria	19
– Weighted Decision Matrix	19
– Belbin's Role Matrix	20
– QFD Table	20
– Conclusion	20
Marketing	**21**
– Copyright & Patent Laws	22
– Marketing Basics	22
– Target Audience	22
– Existing Products and Brand Competition	23
– Unique Selling Point	25
– Packaging	25
– Marketing Tools & Communication Plan (Internal & External)	25
– Internal Comms Plan	26
– External Comms Plan	26
– Aftermarket care considerations	26
Design	**28**
– Initial Design Idea	30
– QFD	31
– Design for X	32
– Final Design	33
– Conclusion	34
Materials	**35**
– Summary	36
– Metals	36
– Polymers	37
– Sustainable Materials	39
– Material Cost	42
– Conclusion	43
Manufacturing	**44**
– Manufacturing Processes	45
– Manufacturing Process Proposal	47
– Assembly Flow Chart	50
– Conclusion	50
Compliance/Regulations	**51**
– What are Regulations	52
– Manufacturing Regulations	52
– Waste Materials Regulations	54
– Intellectual Property Regulations	56
– Conclusion	57
Appendices	**58**
References	**74**

Introduction

The purpose of this project is to develop a team that can work together to complete a common goal. The team will research, design, develop and plan out the manufacturing process of a product whilst also adhering to legal requirements.

This document will cover the following aspects of the project:

Team Roles
Coordination
Decision Criteria
Marketing
Design
Materials
Manufacturing
Compliance/Regulations

Team Roles

Tom Blizzard

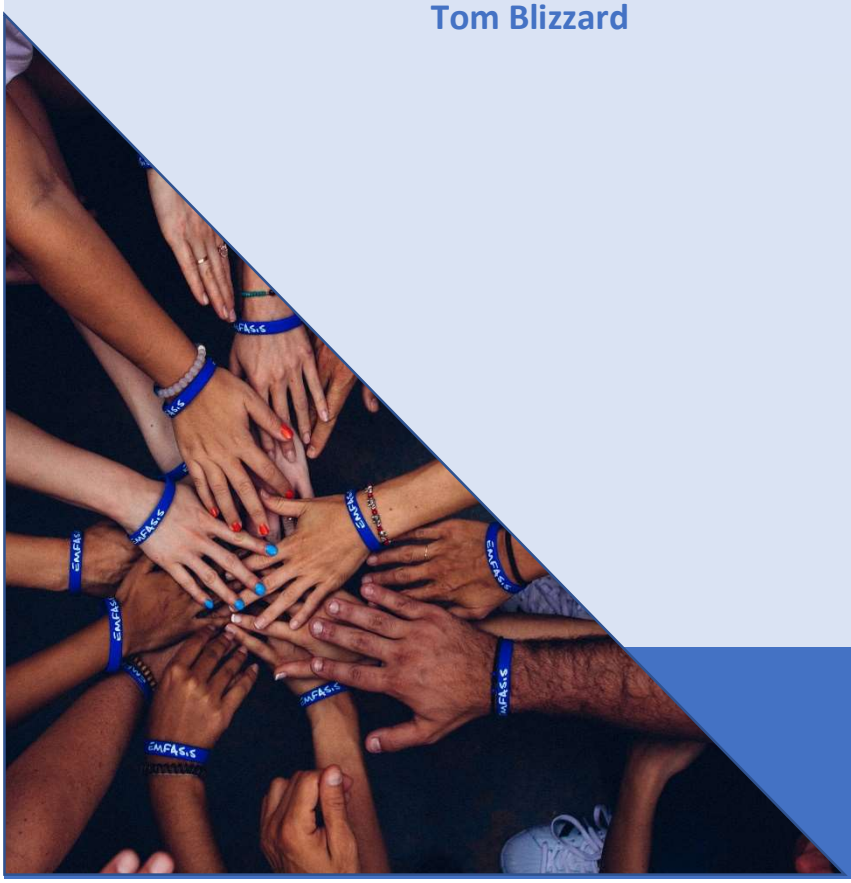

Introduction

During this part of the project, you will be given an overview of the how each member of the team was given their roles and responsibilities. This section will show the team members, their project role and also discuss three different theories used for bringing teams together. These the theories are Belbin's theory, Maslow's theory and Mintzberg's theory. It will be discussed which of the three theories will be used and which one is the most relevant to our team. When one of the theories is selected, there will be a breakdown of who is doing what task and why the theory we have chosen relates to them.

Many companies all over the world drive towards teamwork within all areas of the business. Teamwork is now a new measure of people's success whereas people's achievements were measured individually in previous years. Many companies use work time to do team building exercises in order to develop these skills further as they value them so highly. When individuals are faced with working as part of a team, there is often conflict between members. This generally happens when they are unprepared to work within a team. Continuous training and communication are key to a team developing into a group who work well together and encourage potential within one another. The team members also realise that the number one priority of the team forming is to satisfy the customer and not the management team who are driving them for results. A well-rounded team will be full of decision makers whose decisions are trusted and employees are empowered to make these choices. (Caudron, 1994)

Our team has been asked to design, develop, and analyse an innovative product. To do this we have been separated into a group of 7 and asked to go away and complete the task required of us. The team members and their roles are listed below.

Team Member	Project Role
Adam Sheppard	Compliance/Regulations Decision Criteria
Leon Knight	Co-ordinator
Tom Blizzard	Team Roles
Lewis Christopher	Design
Rhodri Williams	Manufacturing
Matthew Ford	Marketing
Joseph Garland	Materials

These roles were decided over initial meetings. We all decided on an idea, then as a team we scored each idea using a weighted decision matrix table. A weighted decision matrix evaluates a list of options and is used as a decision-making tool. The team will firstly establish a weighted criterion and they cross examines each option against the criteria set. (Tague, 2005). The table allowed us to input 7 ideas and score these ideas accordingly. From this table it allowed us to decide which idea we would be using. Our criteria were made up of 7 factors. These factors are complexity, audience, materials, waste, development time, ease of use and sustainability. These 7 factors helped the team decide what product we were going to use. The product the team decided on using was a right-angle ratchet adapter which scored a total number of172. This was our highest scoring idea and this score allowed us to make the correct decision according to our criteria.

Belbin's Team Roles

Team Role	Contribution	Allowable Weaknesses
Plant	Creative, imaginative, free-thinking. Generates ideas and solves difficult problems.	Ignores incidentals. Too preoccupied to communicate effectively.
Resource Investigator	Outgoing, enthusiastic, communicative. Explores opportunities and develops contacts.	Over-optimistic. Loses interest once initial enthusiasm has passed.
Co-ordinator	Mature, confident, identifies talent. Clarifies goals. Delegates effectively.	Can be seen as manipulative. Offloads own share of the work.
Shaper	Challenging, dynamic, thrives on pressure. Has the drive and courage to overcome obstacles.	Prone to provocation. Offends peoples feelings.
Monitor Evaluator	Sober, strategic and discerning. Sees all options and judges accurately.	Lacks drive and ability to inspire others. Can be overly critical.
Teamworker	Co-operative, perceptive and diplomatic. Listens and averts friction.	Indecisive in crunch situations. Avoids confrontation.
Implementer	Practical, reliable, efficient. Turns ideas into actions and organises work that needs to be done.	Somewhat inflexible. Slow to respond to new possibilities.
Completer Finisher	Painstaking, conscientious, anxious. Searches out errors. Polishes and perfects.	Inclined to worry unduly. Reluctant to delegate.
Specialist	Single-minded, self-starting, dedicated. Provides knowledge and skills in rare supply.	Contributes only on a narrow front. Dwells on technicalities.

Above is a table showing the 9 team roles within Belbin's theory. These 9 roles all have natural contributions from each member but also the allowable weaknesses. Belbin defines a team role as "A tendency to behave, contribute and interrelate with others in a particular way." Each individual within a team has a pattern of behaviour which describes a person's behaviour in relationship to another person which helps a team progress. (MacKechnie, 2003)

The selection of team roles came down to the use of Belbin's team roles. Belbin's theory is that there are nine different behaviours. To becoming a well performing team, these nine behaviours must be within the team. These teams do not require nine members. Generally, members are normally comfortable in two or three of the behaviours. All team members will have strengths and weaknesses within the Belbin theory, but all team roles are important.

After the right-angle ratchet adaptor was selected by the team, roles were discussed so the team could begin on their selected parts of the project. Each member of the team filled in a Belbin team roles table. The table helps show peoples strengths and weaknesses within Belbin's theory. Out of the nine team roles we were able to fill 7 out of the 9 roles with people's strongest team role.

The table below shows the team members and their scoring for each role, from 1 to 9 within Belbin's theory.

	Belbin Roles of the Team								
	Action Orientated			People Orientated			Ceribral		
	Shaper	Implementor	Completor Finisher	Co-ordinator	Team Worker	Resource Investigator	Plant	Monitor Evaluator	Specialist
Leon Knight	9	8	6	7	2	5	1	3	4
Lewis Christopher	1	8	9	5	7	6	2	4	3
Matthew Ford	6	5	2	3	9	1	8	7	4
Rhodri Williams	6	3	8	5	1	9	4	2	7
Adam Sheppard	2	1	7	5	6	3	4	8	9
Tom Blizzard	3	7	6	2	4	8	5	1	9
Joseph Garland	5	2	4	6	3	7	9	8	1

Maslow's Hierarchy of Needs

Maslow's hierarchy of needs derives from a motivational theory in psychology. The theory is set out in hierarchical levels within a pyramid. The pyramid is made from five levels. The bottom of the pyramid has to be satisfied before moving up a level. The first level are basic needs which contrive of water, food, rest and warmth. When these needs are satisfied the individual is able to move to the safety level. This is where an individual has security and safety. After this level is reached the individual requires belongingness and love needs. The next step is esteem needs where people want to feel a sense of accomplishment and the final level is self-actualization, this is where a person achieves their full potential. (Hoffman, 1988)

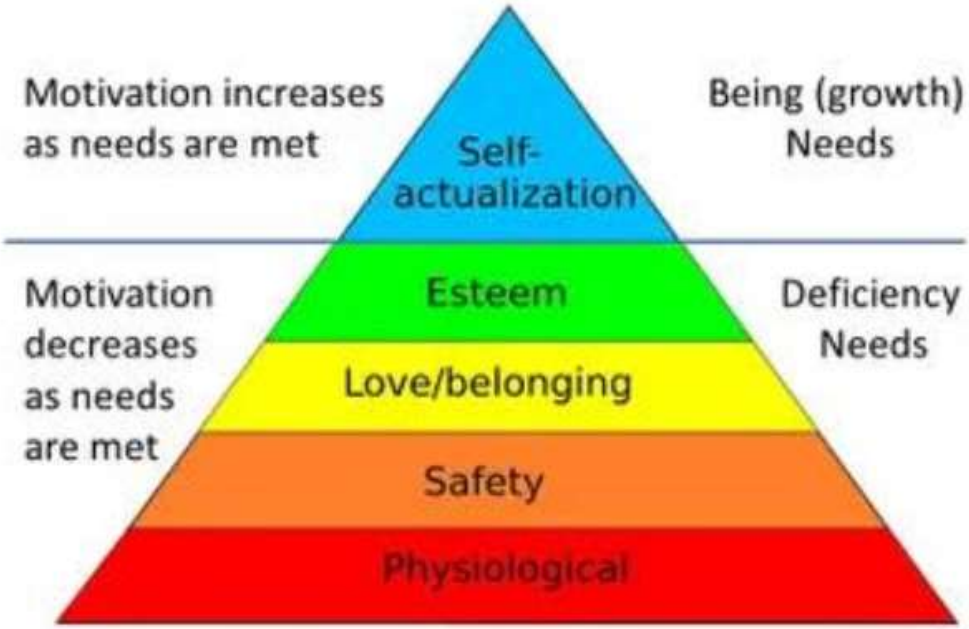

Within Maslow's theory the bottom four requirements are considered deficiency needs. An individual will start to feel more motivated when they are deprived of these four needs. A person's motivation will grow the longer they are denied these needs. An example of this happening is when a person does not have food for a period of time, the person will become hungrier.

In Maslow's original theory in 1943 he said that individuals must satisfy lower levels before progressing to the next level of needs. More recently Maslow has stated that a person's satisfaction is not an "all or none" situation. Maslow also said that his original statements gave a person "the false impression that a need must be satisfied 100% before the next need emerges." (McLeod, 1987)

Maslow's theory has helped the development of other psychological motivational theories. A study was completed in 2011 where researchers Louis Tay and Ed Diener analysed data from 60,000 people over 120 countries. This theory assessed six needs instead of the 5 which is required in Maslow's theory. These six needs are safety, love, pride respect, mastery and autonomy. The six requirements were linked to well-being, but it was also linked to people's overall quality of their lives.

Another theory which has been heavily influenced by Maslow's theory is eudemonic well-being. This theory suggest that their theory refers to meaning and purpose which is related to Maslow's theory of self-actualisation. The eudemonic well-being theory was developed by Carol Ryff and Burton Singer who are both psychologists.

Mintzberg Theory

Henry Mintzberg is an author but also a management expert. As an educated man Mintzberg believes that skills cannot be taught through classrooms alone, he believes that skills are learned through experience. Mintzberg said "You can teach all sorts of things that improve the practise of management with people who are managers. What you cannot do is teach management to somebody who is not a manager." (Caramela, 2018)

When looking at Mintzberg's theory there are three different steps. First there is the organisational types, secondly parts of an organisation and finally managerial roles.

Looking at the first stage which is organisational types, there are 5 types. These are:

• **Simple Structure** – This organisation type is made up of few managers with multiple employees. These are generally entrepreneurial structures.

• **Machine Bureaucracy** – Workers are part of a machine and each section of the business has its own responsibilities.

• **Professional Bureaucracy** – This type of organisation runs to each individuals' skillsets as each person works independently. Decisions are made by the individual without discussion.

• **Divisional form** – This is where each department is made up of a certain skillset. The work is separated between departments which best suit the job and they take ownership of the work.

• **Adhocracy** – This structure simply has no structure. This structure I made up of highly qualified employees who work in teams to complete tasks and they adjust to the business demands and changes.

These 5 organisational types lead us into parts of an organisation. This section shows Mintzberg's theory should allow for a maximum of these six parts of an organisation.

• **Strategic Apex**

• **Middle Line**

• **Operating Core**

• **Technostructure**

• **Support Staff**

•**Ideology**

These six parts of an organisation are generally where companies are split into departments. They will take care of their part of the organisation rather than try to do all parts. These departments will normally report to a central figure or decision maker.

Once you have looked at these two sections of Mintzberg's theory you're on to the final and what many consider the most important part of Mintzberg's theory, managerial roles. There are ten managerial roles which are split into 3 types of styles. These are interpersonal, informational and decision making.

Interpersonal

1. **Figurehead** – A figurehead within a company represents the company in a professional style.

2. **Leader** – A manager should always be a leader. A manager should be the person who employees can look to for advice and guidance when a tough time or situation arise.

3. **Liaison** – A manager who comes under the liaison style is responsible for working with other companies outside of their own. This information will get reported back to the individual's company.

Informational

4. **Monitor** – A monitor will look to other companies and their own for changes that can be made to better the company. This can be done simply by rectifying issues internally.

5. **Disseminator** – This management type will relay relevant and important information back to employees and set tasks to rectify issues which have come up.

6. **Spokesperson** – A spokesperson is someone within the company who relays information externally from the company. This can act as advertising for their company/brand.

Decision Making

7. **Entrepreneur** – This type of manager will always inspire change within a company. New ideas will come from this manager type to improve the company.

8. **Disturbance Handler** – Any conflict which is internal or external should be handled by managers.

9. **Resource Manager** – Funding to equipment will be the responsibility of a manager. They will monitor several resources at one time.

10. **Negotiator** – All companies will have a negotiator. The negotiator will be responsible for all internal and external negotiations whether it be a yearly pay negotiation or new business coming to a company. (Caramela, 2018) (Zartler, 2016)

Our Team

From the three method's which have been discussed through the team roles section of this assignment, there was a discussion which took place to determine which method would suit our team better or whether we would use different methods from different theories.

When looking at Maslow's theory the team had decided that the methods were relatable but would not be as helpful to us through this project. We unknowingly use these methods not only in a project but in daily life situations to motivate ourselves.

The team then looked at Mintzberg's theory. This theory looks at different business types and structures firstly. This was helpful to us as we could identify where our team would be when considering the project, we were working on. As the team developed from initial meetings, we found ourselves in a divisional form. This form came as each individual was given a section of the project to deal with according to their skills. These sections were like departments within a company where meetings were held between people to assist but they were all reliable for their own section. We did not use this method as much only because it is concentrated towards a manager's role with a project or business.

Finally, we came to Belbin's theory. As a team it was decided that this would be the main driver of who would be taking on what task. The team filled in a 'Belbin's roles of the team' table. This table shows the 9 different roles within Belbin's theory and each individual within the team rated the roles from 1 (strongest) to 9 (weakest). From this we were able to assign people tasks based on their strengths and weaknesses. (Anderson, 2004)

Analysing the team's roles can show how we did this.

Joseph Garland – Specialist – Joseph was assigned materials within the project as this was a specialist subject of his which has been gained over time.

Leon Knight – Plant – Leon took on the role of co-ordinator. In Belbin's table his co-ordinator ability was rated a 7. From initial meetings the team could see Leon's natural co-ordinator attributes which better suited him to lead the project and timing plans.

Adam Sheppard – Implementor –Adam's roles were decision criteria and compliance/regulations. Being a natural organiser Adam fitted into this role perfectly. Adam was efficient in the decision criteria and also practical in which regulations would affect our project.

Lewis Christopher – Shaper –Lewis was given the role of designing our product which the whole project would be based around. Lewis's shaper role showed from the offset where he took the pressure of designing a difficult product and sharing it with the team.

Rhodri Williams – Team Worker – Rhodri took on the role of manufacturing. Rhodri was able to see all points of view through the project in team meetings and this allowed conflict to be constructive, rather than destructive. The manufacturing of the product was also possible through his good relationship with all team members.

Matthew Ford – Resource Investigator – Matthew was given the role of marketing. Matthew was able to outsource to contacts to spread the word of our product and was consistently enthusiastic throughout the project.

Tom Blizzard – Monitor Evaluator – Tom was given the task of team roles. Tom's role was to look at different methods in which a team can be formed and select accordingly. Tom felt Belbin's theory best suited the team and used it to progress the project.

The role which remains is completer/finisher. All members of the team took on this role to deliver each part of their project on time, without problems and also each section was finished to the highest quality.

Conclusion

During the project, the team has worked well together. The team has achieved what it set out to do and also delivered a high-quality project. The team looked at several different methods which could have changed the outcome of how the project ended up. These were Maslow's, Mintzberg's and Belbin's theories. The three are very effective if used in the correct way.

As a team we felt that Maslow's and Mintzberg's theories weren't as relevant to us as Belbin's theory so we opted to use Belbin's theory throughout the project to dictate what roles the team would be taking on and also ensuring that the project ran as smoothly as possible.

Due to there being 7 members of the team who were very diverse I feel that we filled all 9 roles of Belbin's theory and gave peoples roles which fitted their personalities. This is what allowed this project to be such a great success.

The only negative issue I would like to touch upon would be the lack of contact. Our communication skills have been tested through the project as we all do not work for the same company. We have had to set aside time to have regular online meetings once a week to track and monitor issues arising or to relay information to the team.

Overall, I feel that people have been happy throughout the project, without conflict and also delivering a high standard of work. The negative issue highlighted was an area of improvement that over time would become seamless and come naturally to this project team.

Co-ordination Tools

Leon Knight

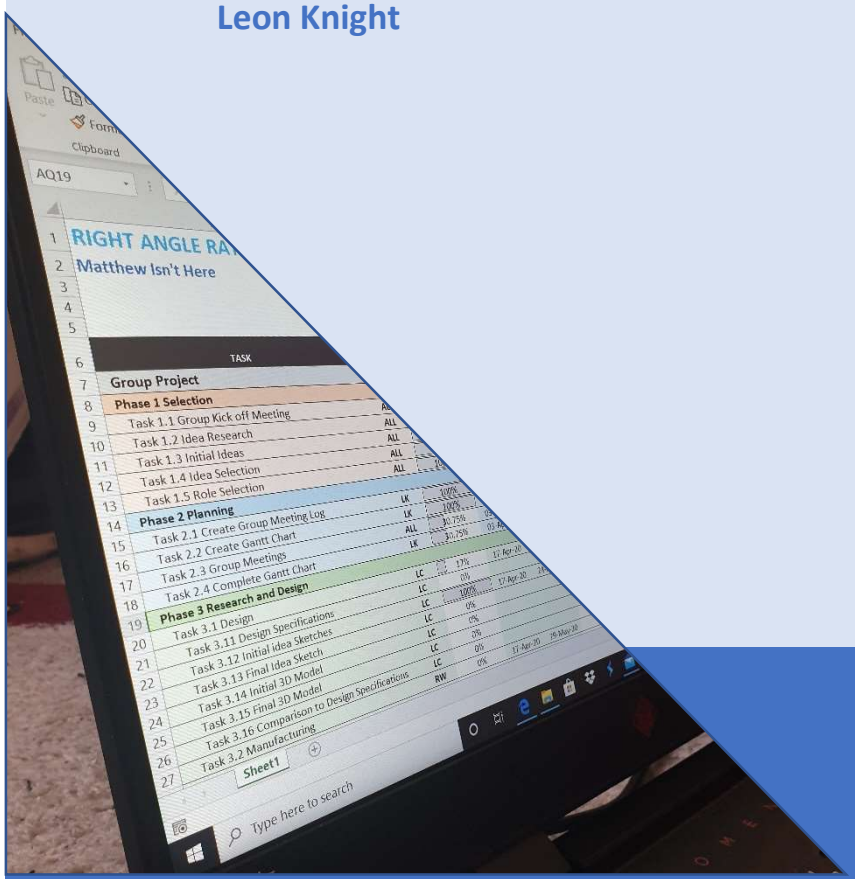

This section will cover the co-ordination tools used on this project. This will go over each method and highlight what steps were taken to ensure the project was kept on track over the duration of this

Gantt Chart

According to Gantt.com (2020) Gantt charts are one of the most prevalent methods when it comes to keeping track of a project's progress. The chart lists all the tasks that need to be completed and the dates in which they are to be achieved by. The progress can be monitored by viewing the progress bar/percentage in the progress column. This can also be monitored by viewing the bar going across the date data. This bar also provides a visual for what tasks should be active, completed or pending.

The **benefits** to using this method are:

- It is easily to visually understand when a project is on track or is falling behind.
- A Gantt chart is flexible in that it can be used for all time scales and it is easy to modify when adding or removing tasks.
- A Gantt chart can have variable levels of complexity to it, depending on what is required for the specific project.
- It is organised in a clear and professional setup. Others in the business/company/organisation will be able to see that you know what you are doing and that you are competent.

The **drawbacks** to using this method are:

- The progress bar does not visualise the quantity of work that is required to complete a task.
- A Gantt chart needs to be manual updated to ensure the data is correct. This means an individual will need to use project time to maintain the chart.
- A Printed-out variation of the Gantt chart can be difficult to read as it would either be printed to a small scale or on a large quantity of paper to get the full scope. It is recommended that it is viewed digitally.

During this project, a Gantt chart was created with the tasks split into four key phases:

Phase	
1	**Selection**
2	**Planning**
3	**Research and Design**
4	**Presentation and Project Package**

[Appendix 1]

Phases one, two and four are all phases in which the team would work collaboratively to complete. Phase three (Research and Design) was split between the members, each having their own section to complete by a pre-determined time frame.

Each Phase has a gateway objective that needed to be achieved to be able to move onto the next phase. These were:

- Role Selection
- Create Gantt Chart
- The completion of all research tasks
- Completion of project package

These are all straightforward gateways except for phase three which required all tasks to be completed. Because phase 3 was split between the group, it meant that to progress onto phase four, everyone was required to pull their weight. If anyone were lagging, others who had managed to complete their tasks could aid them to help the team progress.

The allocation of each section was highlighted in the "Assigned to" column with their initials or with "all" to show a collaborative part. Each task in Phase three was split into sub tasks with their own progress bars. As subtasks are completed overtime, the overall progress bar for the main task will increase until completion of all subtasks has been achieved. This is also a good method to show if any member is struggling to meet deadlines. This can allow the team to make decisions that will positively impact the progress and effectiveness of the team.

Meeting Logbook

Meeting logbooks are a vital tool when it comes to co-ordinating a project. Meeting logs ensure that team members actively communication between one another on a frequent basis. They also allow members to re-tread past meetings to remind themselves what decisions were made and what tasks are next to be completed.

In our team, a member was chosen to be to transcriber for each meeting. Their job was to note several factors of the meeting including attendees, dates, meeting agenda and actions taken from the meeting. The individual would then log this data into a table and create a layout that was both easy to access and understand. The meeting logs were kept on Microsoft Teams where any of the members could reach it, but only the transcriber could make modifications.

[Appendix 2]

The **benefits** of using meeting logs in a project are:

- The logs provide structure to a discussion. This allows for all desired meeting points to be acknowledged in a systematic process, this should ensure that no topics are left unanswered.
- The action list provided at the end of a meeting creates a to do list for the team to work on before the next meeting occurs. This provides frequent bite sized deadlines for each member, encouraging the team to progress with the project without swamping them down in work. This in turn keeps the individual's motivation levels up.
- The logs are also a decent method of measuring the productivity of the team. With each meeting, the team can review the work that has been accomplished and to observe any weak spots in the project.
- The log also provides a level of accountability for each member. The meeting log will show who was given what tasks to complete. It will also show who made contributions to meetings including ideas, votes, debates, and other discussion points. This will give each member a level of ownership for their own work.

For the most part, all members were able to attend the meetings. A weekly meeting was arranged to occur every Friday, this time was agreed because all members would be routinely available at this time. These meetings would be where we would see the progress of the project as a team. Other meetings outside of this time was encouraged to ensure communication as a team was maximised.

These smaller meetings would be more focused on areas of the project that required collaborative work between members working on different roles. If members are to conduct these smaller meetings, they would need to either invite the transcriber to the meeting to take notes or take notes of the meeting themselves and transfer them to the transcriber to update the meeting log table.

If meetings are not actively logged, it can lead to the following **consequences**:

- Individuals forgetting information passed on in past meetings.
- Meetings could be bogged down with repeated questions from previous meetings
- There would be a lack of accountability for decisions and actions previously made
- If anything were to go wrong, it could have legal implications
- Could create delays in the project timeline
- Actions set in previous meetings may be missed and left forgotten until ramifications occur

Critical Path Analysis

Will Kenton (Investopia.com, 2020) describes the critical path analysis (CPA) as a tool used to work out which tasks in a project are either critical or non-critical tasks. The CPA will come in the form of a flow chart, travelling from left to right, and follows each of the steps that are required to complete the project.

Each stage is represented in the form of a box (shown below) that displays the task number on the top half and the time taken to complete it on the bottom half. Each stage will then have four numbers on its perimeter. Each number stands for:

Top Left: Earliest start time **(EST)**

Top Right: Earliest Finish Time **(EFT)**

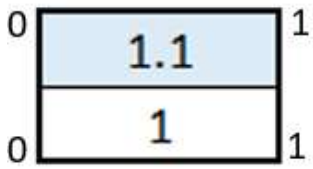

Bottom Left: Latest start time **(LST)**

Bottom Right: Latest Finish Time **(LFT)**

EFT

As you travel through the stages, left to right, the EFT number will accumulate each task's duration period until you reach the end of the project. The EFT is worked out by taking the value of the EST and adding it to the duration of the current task. The Final figure on the EFT will display the Earliest duration the project can be completed in.

EST

The EST is the total duration that was accumulated up until the previous task. If there are multiple tasks that need to be completed to reach this point, the highest figure from previous tasks will be used.

LFT

The LFT is worked out by travelling right to left of the project tasks. The starting figure is the final EFT value that was produced on the EFT. The LFT is typically the total duration that was left from the previous task's LST. If there are multiple tasks that lead to this point the lowest figure from the previous tasks will be used.

LST

As you progress through each stage, right to left, the LST number will gradually decrease until you reach zero at the project's starting point. The LST is worked out by taking the LFT and reducing the number by the current task's duration.

According to an NHS document (wales.nhs.uk, 2020) Once the CPA chart has been completed, you can use it to decide the following factors:

- What the duration of the project will be from the final EFT figure on the last task.
- The critical path of the project. This can be found by working out which tasks do not have any float/slack time available.
- Decide when the latest times for each task needs to start by, ensuring the project remains on time.
- Use the chart to actively monitor each task so that they do not over-run their designated time slots.

In this project, the CPA chart showed that there was a limited amount of flexibility for slack time. The CPA chart lists all the main tasks for the project, it does not however include all the subtasks as it would have made the chart far larger and complicated. Some of the subtasks were also grouped together under a main task (tasks 3.1 - 3.8) as they could be done at any time during the phase as long as the overarching task were completed by the deadline given. If this were to be put into the CPA chart it would better show the critical tasks within the main task. However, it would have made no bearing to the total project time.

[Appendix 3]

Procedures

A project procedure is a sequence of tasks that make up the workflow of the overarching project. The procedure functions as a written-out version of a Gantt chart, favouring organised paragraphs over bar charts. Tasks are categorised into different phases to help better organise a clear workflow.

The US FHWA describes a five-step guide that can be used to create an effective procedure *(FHWA Office of Operations - Coordinating Military Deployments on Roads and Highways - Chapter 4. Recommended Coordination Procedures, 2017).* They depict this list of steps to follow this rough guide:

1. Identify what the project is about/ what the end goal is.
2. Identify what you need to achieve the desired outcome.
3. List different activities that could be used to achieve the project end goal.
4. As a team, discuss which activities are required and organise them into phases and give targets for completion times.
5. Once a consensus is settled, the final list of tasks should be completed. Once finalised, the task list should not be altered.

In this project, the procedure will act in a similar manner to an instruction manual, it will allow the team to follow a step by step guide that will dictate the tasks required to be completed with their respected due dates.

[Appendix 4]

Benefits of following the procedure:

- The team follows the tasks in the procedure order, they should be able to mitigate any chance of missing any activities.
- It gives a structure to the process, meaning that individuals should easily be able to identify which task they should be working on.
- The procedure gives a reasonable amount of information that can be used by the team to conduct the task.

Drawbacks of the procedure:

- The procedure is rigid in nature. Once the tasks have been set, they should not be altered, or it can lead to confusion and the workflow could fall apart.
- The procedure cannot give you live progress of the tasks. It can only let you know where the project should be at.

Comparisons and Summary

Each of these methods work together to help the group to keep on track with the project and ensure that we delivered an effective and efficient team. Each method provides their own benefits and weaknesses, but they can each lean on one other to help mitigate any mistakes or mishaps from occurring.

For instance, the Gantt chart provides a clear layout to make it simple to oversee what tasks should have been completed and what upcoming tasks should be next. However, the Gantt chart is such a large table that it would be difficult to create print outs for meetings and reviews. On the other hand, The Critical path analysis and procedure are smaller and easy to print, with the CPA being a particularly straightforward guide when wanting to work out what order tasks need to be completed. However, The Gantt chart does hold more details compared to the CPA.

Another example of where these methods help one another is that the logbook can hold detailed information which is regularly updated. The logbook will hold details from meetings including plan alterations and current progress of individual tasks. It also acts as a monitoring device to check on individuals and their progress and motivation levels. This level of detail in unattainable in the other two methods. Conversely, this method cannot give the project the solid structure required to allow the project to maintain a steady progress rate throughout the process. The log can remind individuals of what tasks to work on next, but it does not have details on deadlines and tasks that are further along in the project. The log has limited foresight and is more reactive than proactive compared to the other methods.

The procedure, compared to the other methods, will provide more information about the individual tasks than the Gantt chart and the CPA. It may not give as much detail as the logbook, but it is a proactive method of coordinating compared to the logbook's reactive method. The is shown because the procedure is able to provide information of upcoming tasks all the through the project at any time, whereas the logbook can only give information on tasks that have been completed or are currently being worked on. The Gantt chart and logbook have an advantage over the procedure method because they are both able to monitor the live progress of the tasks being worked on, where the procedure cannot. The Gantt chart can provide a visual percentage/bar chart to show this information and the logbook can give current feedback from the team members.

Decision Criteria

Adam Sheppard

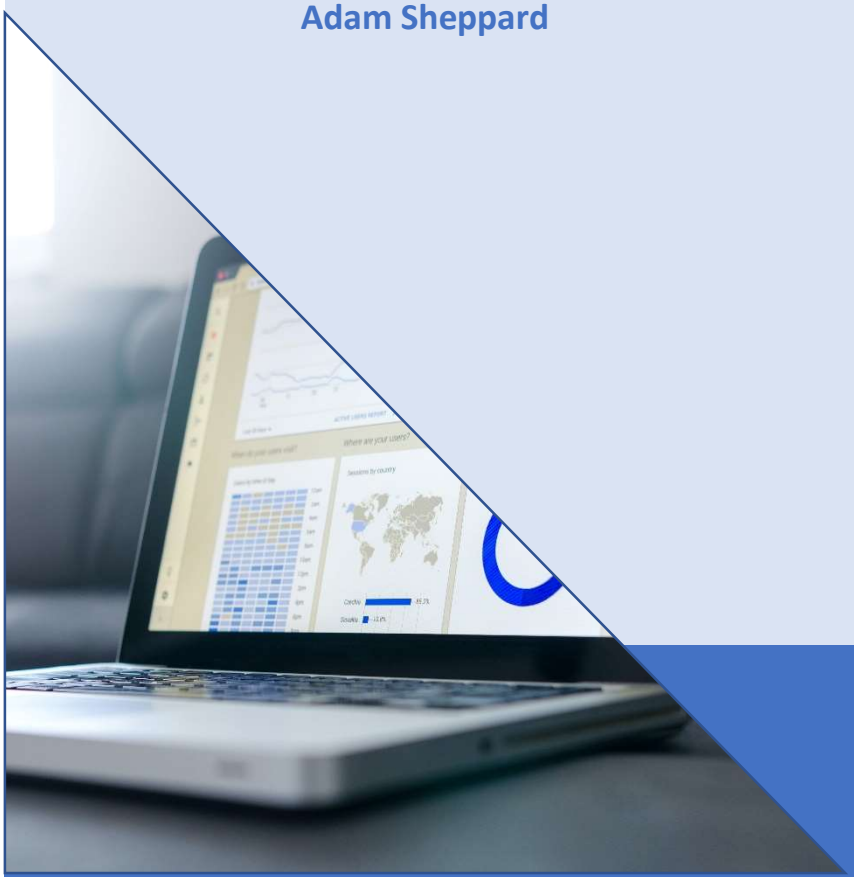

During this section I will be evaluating the decision matrices and tables used during the project. Identifying key areas where decision criteria was used as a tool to make decisions between the group easier and efficient.

What are Decision Criteria?

Decision Criteria is an essential tool in any company, this is especially the case when the company's main purpose is the development and manufacturing of products. When making any major decisions as a group, it is important to first set out the criteria that the decision needs to satisfy before being implemented. These criteria are the guidelines or requirements such as specifications, scoring systems (Decision Matrix) or a rule of thumb designed for flexibility. Below are five examples of Decision criteria according to (Mar, 2018):

- Cost
- Quality
- Efficiency
- Performance
- Reliability

These are typical criteria that will be seen in a number of decision matrices/ tables in several different companies. However, *"Criteria in a business setting are those variables or characteristics that are important to the organization making the decision"* (Cox, 2015). This means that as the manufacturer of the product, we decided on what the criteria was most relevant for the decisions being made. Evidence of this can be found in the following Matrices and tables.

Weighted Decision Matrix

Prior to deciding what would need to be completed as a part of the team objectives, it was important to first identify what product concept we would be developing. In this instance it was decided that a 'Weighted Decision Matrix' would be used.

Everyone was given time to think of their own innovation, then during a brainstorming session the respective ideas were scored based on pre-determined criteria. As mentioned previously, the criteria used focused on what we determined as key points that the succeeding invention should satisfy. As a team, we decided on what level of importance (weighting) every criterion had. This would be used as a multiplication factor for each score giving a more accurate representation of ideal qualities.

		Weighted Decision Matrix													
		Idea 1	Diabetic Chip	Idea 2	Vanopy	Idea 3	Key Buddy	Idea 4	Pressure Karate Gear	Idea 5	Right Angle Ratchet Adapter	Idea 6	Golf Buddy	Idea 7	Laptop Tray
Criteria	Weighting	Score	Total	Score	Total	Score	Total	Score	Total	Score	Total	Score	Total	Score	Total
Complexity	5	2	10	6	30	2	10	2	10	7	35	5	25	6	30
Potential Audience	4	3	12	4	16	10	40	4	16	4	16	4	16	6	24
Materials	3	5	15	5	15	5	15	7	21	6	18	8	24	7	21
Waste Generation	3	10	30	5	15	8	24	5	15	9	27	4	12	7	21
Development time	2	9	18	5	10	2	4	3	6	8	16	8	16	5	10
Ease of use	5	6	30	9	45	9	45	8	40	8	40	9	45	8	40
Sustainability	4	1	4	8	28	6	24	5	20	5	20	8	32	6	24
Total			119		159		162		128		172		170		170

Weighted Decision Matrix

As demonstrated clearly in the image above, had this type of decision criteria not been implemented, the deciding process would have been lengthened considerably. With three of the innovations scoring within 2 points of one another, serious points of debates and collision were avoided.

Belbin's Role Matrix

Before making any decision regarding the design and manufacture of the product, it was key to identify what roles everyone would have as a part of the team. For this we decided to create a 'Belbin's Role Matrix', this would help us identify key traits and skills that everyone had and align them to their specific roles. Before the creation of this table it was important to first look into the team objectives needed in developing a 'Right Angle Ratchet Adapter'. As in some Instances, not all of Belbin's nine roles are required at the same time (Belbin, 2020).

	Belbin Roles of the Team								
	Action Orientated			People Orientated			Ceribral		
	Shaper	Implementor	Completor Finisher	Co-ordinator	Team Worker	Resource Investigator	Plant	Monitor Evaluator	Specialist
Leon Knight	9	8	6	7	2	5	1	3	4
Lewis Christopher	1	8	9	5	7	6	2	4	3
Matthew Ford	6	5	2	3	9	1	8	7	4
Rhodri Williams	6	3	8	5	1	9	4	2	7
Adam Sheppard	2	1	7	5	6	3	4	8	9
Tom Blizzard	3	7	6	2	4	8	5	1	9
Joseph Garland	5	2	4	6	3	7	9	8	1

Belbin's Role Matrix

The criteria for this matrix was determined by the principles of Belbin's 9 roles. Each role is made of strengths and weaknesses. Using these criteria everyone was required to score the roles best suited to their personalities and traits from 1 to 9, 1 being the strongest relation and 9 being the weakest. Using the findings in the table above, we were able to conclude who would take on what role(s) and therefore the sections they would be responsible for.

Quality Function Deployment (QFD) Table

A QFD table (Appendix 7) is a useful decision-making tool when looking to develop a new/ current product. In some instances, this tool takes the decision making out of the manufacturer's hands in terms of feature priority. The QFD is used to determine the wants and needs of the customer, we as a team prioritised the 'Demanded Qualities' in terms of importance. Then continued to assess the relationships between demanded qualities and the functional requirement or 'Quality Characteristics' (American Society for Quality, 2020).

The decision criteria in both the demanded qualities and functional requirements were used together to highlight the features requiring most improvement in the original design. A scoring system is also used in the QFD to identify areas where we fall short in comparison to competitors. Taking both design and marketing into consideration.

Conclusion

It is clear to see that decision criteria have a clear impact on the capabilities of a group to make important decisions efficiently. By first establishing key criteria to meet in certain sections of the project, there was no wasted time on any unneeded debates or quarrels. Using this as a tool we could develop an effective tool that met customer wants and needs in an organised and timely manner.
I have found the research into decision criteria enlightening, highlighting the importance it holds when working as a part of a team. I will look to implement this in future group projects and work activities.

Marketing

Matthew Ford

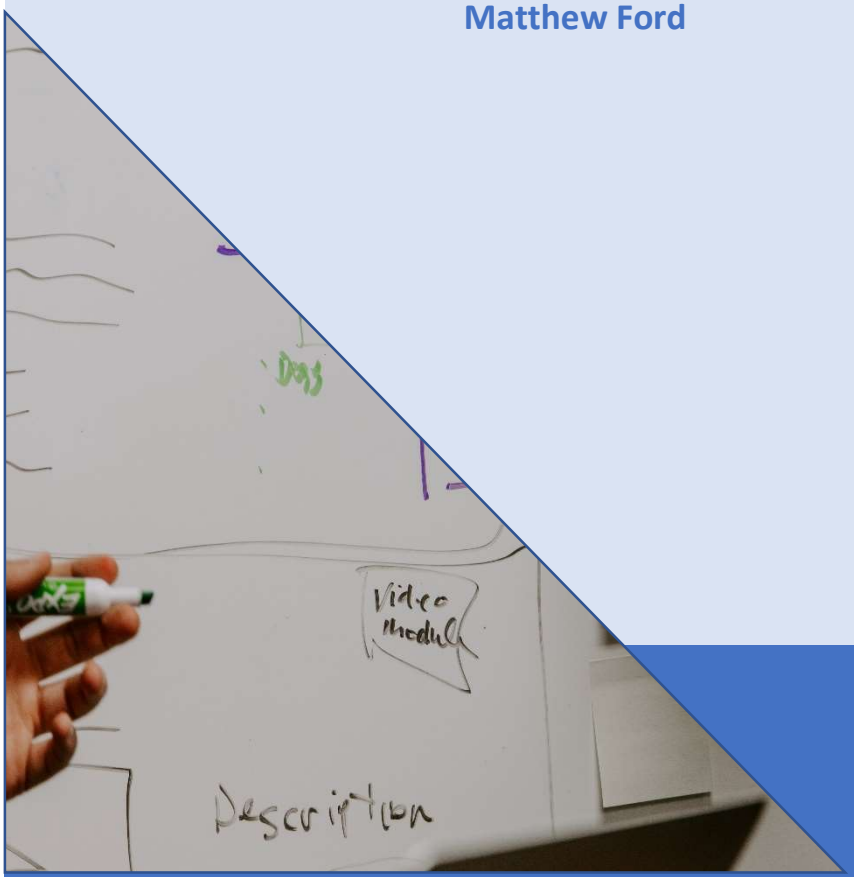

The purpose of this section of the project is to determine how our product will be marketed along with how it will be priced and what other services we, as a new company producing a fresh product, should consider providing to the customer.

This will be done by drawing from numerous and diverse written sources as well as life experience. During the project, we learnt that our product was unique, needed to be legally protected, that we had a large price band to operate in, and that aftersales support is an essential part of product marketing.

Copyright and Patent Laws

https://www.gov.uk/intellectual-property-an-overview
Before marketing a product, it is absolutely key that the product design, name and branding is appropriately protected in law. This must be done to ensure against copies, fake products and design theft. This is known intellectual property protection. As well as protecting your product, it enables a business or individual to bring legal action against anyone that may steal or imitate the design.
According to British regulations, there are five types of protection available in UK law.

The first two are "copyright" and "design right". These are granted automatically when an idea is created. Copyright is protection for written word literary works, photography, music etc. More relevant to our product is the design right. This protects the fundamental shape of a design

The other three are "trademarks", "registered designs" and "patents". These are not automatically granted; they need to be applied for via the Intellectual Property Office. For the product in question, we would be less concerned with the registered designs protection as the product is of an industrial nature, and this type of protection is for the colour/appearance of the property. We would be far more inclined to obtain the trademark and patent. The trademark would protect our product logo and name, and the patent would protect the invention/concept itself.
Once all these legal protections are in place, we can begin to look into marketing the product.

Marketing Basics

When marketing a product there are five fundamental aspects that need to be covered. These are: -

- Decide who your buyer is (target audience)
- Look into what similar products already exist (competition)
- What media will be used to market the product
- Enterprise/company background
- Evolve and diversify tactics for longevity of campaign

https://fitsmallbusiness.com/how-to-market-a-product/

Target Audience

Identifying the audience at which a product is aimed is a vital part of marketing. It ensures that the product is made available to all potential buyers, and conversely ensures that time and money is not wasted on audiences that are simply not interested.

The product in question is a compact adapter unit designed fit on a powered impact driver to apply torque to nuts and bolt heads where there is not enough room to fit a conventional tool. The unit will be available in one size only, this being a ½ inch drive input and output.

The ½" drive unit: this will appeal to light industry maintenance and assembly. Specifically, the automotive industry where access to fasteners can be severely restricted, namely in engine compartments.

The 1/2" drive unit: this will also be aimed at the heavier industries. Such as petro-chemical maintenance companies and assembly lines where there might be other obstacles (pipework, machinery, explosive atmospheres) preventing the use of conventional impact tools.
The collation of the target audiences 'master data' will be an integral step to ensure that we are contacting the correct people and building a relationship with these customers prior to the product launch.

The master data to be collated will include:

- Contact Company Name
- End User Contact Name
- Email address for End User
- Purchasing cycle to enable our commercial team to plan demand effectively

Collating this contact details will also support account creation to enable a smooth customer journey, a personalised after care and finally be utilised for measuring the overall success of the product roll out.

Finally, the last use for this data will be utilised for a customer satisfaction survey which will help us establish our Net Promoter Score (NPS) for this product. A Net Promoter Score a metric for assessing customer loyalty for a company's brand, products or services. **Many** companies use NPS as part of their customer relationship management (CRM) strategy because the metric is easy to calculate.

Existing Products and Brand Competition

Understanding your market and identifying existing brand competitors is a vital part of marketing. It will provide you with critical information such as:

- What customers are currently purchasing similar products
- Product Price point - How much they are willing to pay
- Identify any copyright/patent breaches are being made against existing products

Having carried out thorough market research by means of internet searches, patent searches and catalogue consultation, I can confirm there are no products on the market that perform the exact same task that our product does.

The market research concluded that there are complete units available that incorporate a right-angled drive head, but there are no standalone adapters like ours.
With this in mind, we have identified a core requirement for this product roll out to be successful.

"our product needs to be inexpensive, to avoid potential customers overlooking our product and going directly
to a purpose-built angled driver"

Below is a table showing typical prices of purpose-built tools currently available in the market – type of product, drive size and price.

	Pneumatic	Electric	Drive size	Price
Tool				
Ingersol		x	1/2"	£400
Ingersol	x		1/2"	£228
Milwaukee		x	1/2"	£200
Makita		x	1/2"	£200
Chicago Pneumatics	x		1/2"	£216
Bahco	x		1/2"	£460

From the information above, it has been identified that market shows a very wide price range on the variety of products available. The lowest priced electric unit being £200 (not including battery), and the lowest priced pneumatic item is £216. Having utilised this market intelligence, we have been able to identify the lowest and highest price points. This intelligence has enabled us to be understand our price point and we have identified that we will need to market our product for maximum market filtration at less than £200 for a successful product roll out.

Whist gathering market intelligence on these products, we were also able to identify a gap in the current market. There doesn't appear to be any ¾" drive units readily available on the market. This information should be noted as a future potential product line for the company to invest in.

https://www.9spokes.com/blog/the-seven-best-pricing-strategies-for-small-businesses-infographic/#:~:text=1.,which%20goes%20up%20over%20time.

Now that a base product price line has been identified, we can begin the process of developing a completive pricing strategy for our product. A pricing strategy is by which a company sets its product price. A good and accurate pricing strategy will give our product the best chance of making maximum profits per unit sold. There are several recognised strategies used by businesses, including but not limited to: -

"Price Skimming", using an initial overinflated product price, which then tapers off as competition increases

"Value Pricing", pricing a product at a minimum level, just sufficient to cover costs, often used on products produced cheaply in large quantities.

"Penetration pricing", pricing a product at, or below the actual product costs, selling it at a loss. This is a very short term concept, designed to capture the market before raising the product price to a profitable level. This is a risky strategy as if the product does not capture the market, substantial losses will be made.

"Competition pricing", this is the strategy we will use for our product. This strategy is used when there are only a small number of the competitors in a market, none of whom are particularly interested in

a price war. As our product is unique, we can set our own price, so long as we stay well below our nearest competitors prices that are tabled above.

Unique Selling Point

https://www.newbreedmarketing.com/blog/how-to-define-your-unique-selling-proposition-usp
We have a USP that no other competitor on the market has and this message will be utilised by our commercial teams and our customer care teams to promote the product both internally and externally to maximise cross sales and identity cross selling opportunities.
Our product has several moving parts and is a high impact tool, the product life will be finite, therefore this aftermarket care is essential to ensure the customer does not feel short changed by the experience and instead feels looked after and willing to reinvest in a second, third, fourth product.

Packaging

Due to the target audience our product is aimed at, it is highly unlikely that the tool will be bought off the shelf in a local store/shop, it is more likely to be ordered online, or via a tool catalogue. For this reason, the appearance of the packaging is a low priority within the marketing plan, taking third place, behind the cost and practicality. There is investment to be returned by investing in packaging, therefore our product will be packaged in an appealing cardboard box with clever see through plastic window and protective transparent plastic preforms to keep the product in place (visible through window) within the box. The packaging essentially just needs to keep the product clean, enable it to travel safely via mail and clearly the product along with promoting the company name and logo but extra investment here doubles as an additional advertising stream.
In addition to the practical aspects of the packaging, it is worth bearing in mind the guidance laid out by Government bodies (Environment Agency) on the environmental impact of packaging waste. Although the mass and size of our packaging will mean that we do not legally fall under their guidelines (over 50 tonnes of packaging and £2m company turnover) as a responsible business we would make every effort to conform to their guidelines which are:-

- reduce the amount of packaging produced in the first place
- reduce how much packaging waste goes to landfill
- increase the amount of packaging waste that's recycled and recovered

https://www.gov.uk/guidance/packaging-producer-responsibilities

Marketing tools & Communiction Plan (internal & External)

https://marketbusinessnews.com/financial-glossary/marketing-tools/
https://fabrikbrands.com/external-communication-strategies/
In the 21st Century, there are an almost infinite number of marketing tools, broadly ranging from the old "real world" tools such as newspapers, magazines, classified adverts, word of mouth, postal mail, conferences and trade shows, celebrity/respected figure endorsements, to the more modern electronic based tools such as email, online advertising via social media platforms, search engine key words and internet marketing.
A well-positioned marketing campaign takes an integrated approach, combining several if not all of the above methods, whilst ensuring that the techniques and tools are adapted with time to ensure all available client bases are catered to.
For internal marketing/brand awareness, we no longer issues 'memos' instead looking to utilise the improved platforms at our disposal such as a company intranet, closed groups on social media, screens in staff areas so that the workforce are engaged and aware of the launches.

Internal Comms Plan

The objectives of this communications plan are:

- To update the business on the new product launch
- To engage key stakeholders and create a sense of excitement about the benefits the product brings
- To demonstrate to the wider employee base that the company is investing in their future with additions to the product portfolio
- To ensure all employees are aware of how the product can be used.

Key messages - USP

- New Product Launch and its USP - *Our product has several moving parts and is a high impact tool, the product life will be finite, therefore this aftermarket care is essential to ensure the customer does not feel short changed by the experience and instead feels looked after and willing to reinvest in a second, third, fourth product*.

Internal communications activity

- Communication of training schedule for end users and sellers of product
- Regular reminders and signpost information for queries and problems – utilising the intranet, office notice boards and internal mail announcements
- Positive reinforcement of product launch from Senior Leaders
- Countdown activity a week prior to launch of product

External Comms Plan

The objectives of this communications plan are:

- To communicate a new product

Key message

- New Product Launch and its USP - *Our product has several moving parts and is a high impact tool, the product life will be finite, therefore this aftermarket care is essential to ensure the customer does not feel short changed by the experience and instead feels looked after and willing to reinvest in a second, third, fourth product*.

External communications activity

- Series of features, focusing on the key message and user reviews
- Clear communication of product availability, price and how to order

Aftermarket care considerations

https://blog.hubspot.com/service/what-is-nps

After a customer has purchased our product, it is essential to maintain a good dialogue with them.

As our product has several moving parts and is a high impact tool, the product life will be finite, therefore this aftermarket care is essential to ensure the customer does not feel short changed by the experience and instead feels looked after and willing to reinvest in a second, third, fourth product. Utilising the master data collated, we will provide them at point of purchase a dedicated Customer Care contact to ensure that customers feels valued and ensuring that they are satisfied with the product. Taking this approach ensures that should any issues arise they will be familiar with their Customer Care contact and will contact them as their first point of call with any questions.

This would serve us two fold, the first benefit being the expectation that any service or product complaints would be kept "in house" and logged via the Customer Care contact and not be published on social media.

The second benefit, would provide us with an opportunity to repair the customers faith in us, thus ensuring they want to repeat their customer purchase with us for additional products providing us with the potential to cross sell within our product portfolio. The third benefit, is to support us with

our NPS - to make sure that both the product and company name are maintained in a high standing and maximising the positive “word of mouth” advertising touched upon earlier.
After each purchase the customer will be provided with a questionnaire for feedback on their purchasing journey and the usefulness of the product received. This will be carried out via e-mail and will provide us with our NPS score.

The Net Promoter Score is calculated as the difference between the percentage of Promoters and Detractors. The NPS is not expressed as a percentage but as an absolute number lying between -100 and +100. For instance, if you have 25% Promoters, 55% Passives and 20% Detractors, the NPS will be +5.

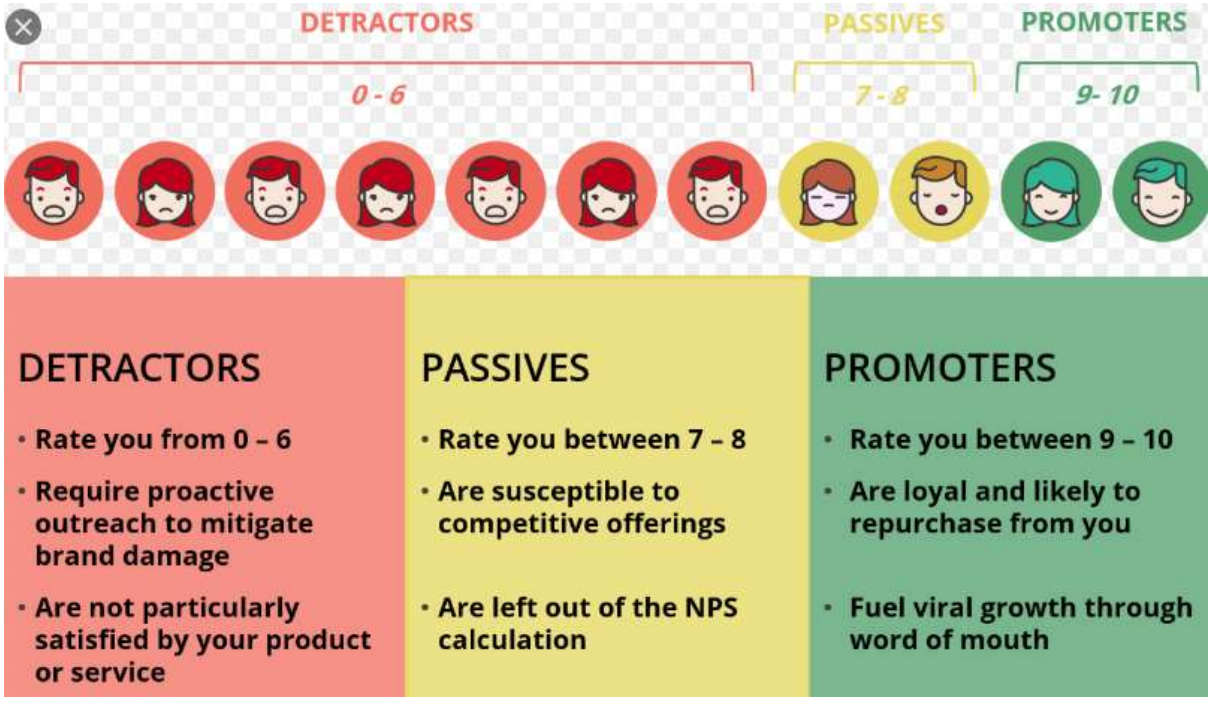

The data gathered from the NPS score will allow us to gain further insight into our customer base providing us with information such as:

- how likely are you to buy from us again
- how was your onboard experience as a new customer
- was your order delivered on time
- how likely are you to recommend us to a friend
- did you visit us with the sole purpose of buying the product you bought
- how would you rate the service from your customer care contact
- were you explained the UPS of the product
- were you happy with the price of the product
- were any issues you had during your purchase resolved in a timely manner and to your satisfaction
- what could we have done differently
- what new products would you like to see in our portfolio

Design

Lewis Christopher

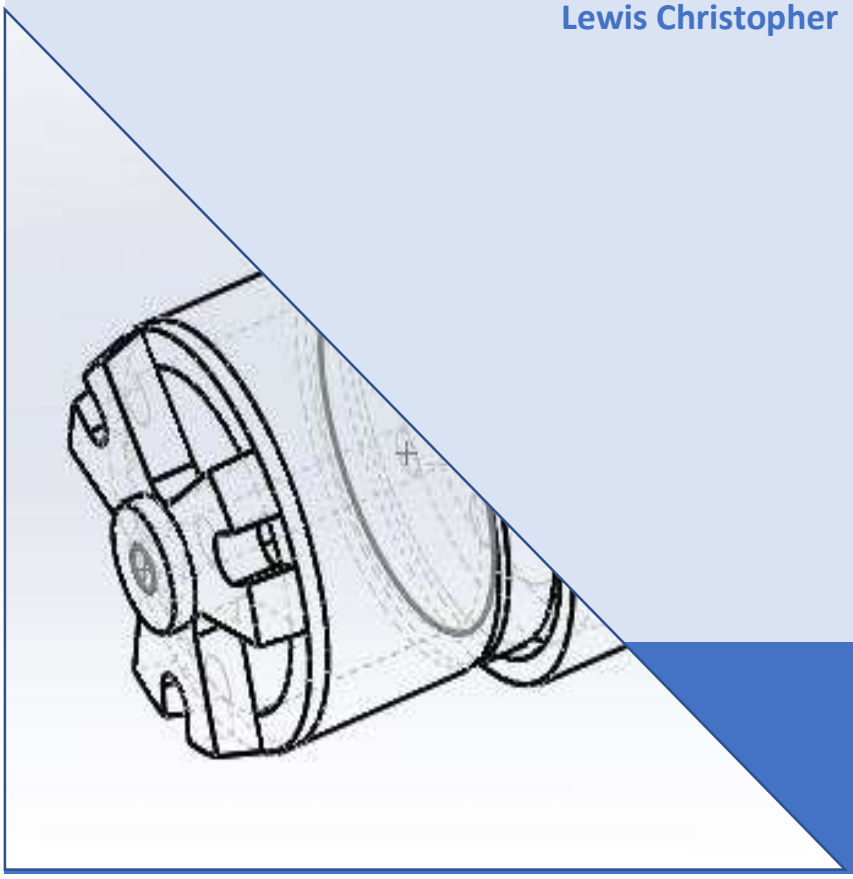

Introduction

The product which I am designing and developing is to be used by maintenance technicians across a range of disciplines, who regularly use either ratchets or impact wrenches as part of their job. It could also be aimed at DIY enthusiasts who may want to include this in their tool kits. The product is being developed in order to eradicate the problem of trying to loosen, or tighten bolts, where there is not enough room to get a wrench on the bolt. Alternatively, it can be used in situations where you do not have the space to apply sufficient force to the ratchet in order to tighten the bolt to the correct torque, or if loosening, enough force to exceed the required break out torque. If a technician is working in an environment in which there a lot of machinery in a close proximity and movement is therefore restricted, this issue could occur daily.

There are several basic requirements that the product needs to solve this problem. All further research and development will be built upon these requirements. Firstly, the tool will need to be able to fit on to a ratchet or impact wrench and into a socket, therefore it will require both a male and female, half inch ratchet attachment. Secondly, the tool must provide a means of transferring the turning force of the ratchet at an angle, hence giving the technician the ability to work from a location which is more convenient or safer for them. The tool must be able to withstand the torque which it will be subjected to, so it must have a solid casing and a method of transferring the torque at an angle without causing damage to the tool or risking the safety of the worker.

There are numerous other requirements of this design, which will become apparent as I carry out my quality function deployment (QFD) and there will be many alterations made as I focus on designing for manufacture and sustainability. The three aspects I have mentioned previously are the essential basic requirements in order to successfully design a tool that will meet the customer demands. The success of the design will be evaluated firstly against these points, which will give a clear answer of whether the tool will be able to solve the initial problem. Furthermore, I will then compare the final design against the findings of my QFD, to ensure the product is able to meet the customer's needs effectively and I will then also assess how well the design meets the brief of design for manufacture and sustainability.

Initial Design Idea

During the concept design phase of the project, the designer will confirm the understanding of the design brief and brainstorm initial ideas of how the issues can be overcome (Rudeck, 2017). When in the concept design stage, getting input from numerous avenues will help to get the best results (Rudeck, 2017). During this initial designing stage, I therefore gathered input from other members of the team to help produce the concept design, which would work as the basis for further development.

As you can see from the design image (Appendix 5) the initial design shows the first attempt at producing a tool that will meet the basic requirements of the customer. Currently the design shows a tool that can transfer the input turning motion of the ratchet on the female coupler to the output on the male, through a 90-degree angle. This is achieved using a bevel and pinion gear, hence achieving the first point of the design specification. The solid outer casing of the tool and the use of the bushes around the shaft of the gear, will enable the user to apply a good amount of torque through the tool in order to tighten or loosen the bolts.

The design for manufacturing and sustainability aspect of the part has not yet been addressed at this stage of the design and alterations will have to be made to allow the design to become maintainable. As the design currently looks, there is no way to replace either the bushes or the gears if they wear over time as in this concept, they are made with an interference fit which would not allow them to be removed and maintained. The QFD will also raise further issues, which will need to be addressed in order to produce a tool that meets all the needs of the customer, along with any other maintainability issues which may become clear through further research and development.

Quality Function Deployment

Quality function deployment is a tool used during the design process as a means of assessing the needs of the customer and then working to effectively respond and address those requirements and expectations (Furterer, 2020). Using the house of quality model allows the desires of the customer to be prioritised and this can then be used to produce a realistic plan for the design process (Anon., 2019).

The QFD which I have completed for this design (Appendix 7) shows that the customer's priorities are that the product is durable and maintainable. The cost is another high priority but as the table shows when the quality of a product increases so does the price. This is an aspect of the design that will have to be investigated to ensure that I am able to meet these two, contrasting demands of the customer.

The QFD shows the current competition and how our initial concept design compares to them based on each of the criteria that the customer has stipulated. The concept design is not currently as high quality as the comparative tools but is also a cheaper alternative. Development of the current design will focus on insuring that the quality is comparable to the other available tools. The focus on design for manufacture will aid in keeping production costs as low as possible, so as not to negatively impact the cost price for the customer.

Design for 'X'

Design for 'X' is a design approach where 'X' represents the main focal point of the process (Sunny, 2019). This approach is essential in ensuring that the design is reflective of what the customer requires and their demands (Sunny, 2019) . There are numerous different aspects which can be focused on, such as cost, sustainability, manufacture or quality (Sunny, 2019).

The aspect of the design which will be focused on in this process is design for manufacture (DFM) and sustainability (E-BI, 2018). Design for manufacture is the process of producing product designs with the main goal in mind being ease of producing the physical product (E-BI, 2018). If effectively carried out, DFM can ensure a higher level of quality and can speed up production times which allows for lower production costs and therefore allows for lower costs for customers (E-BI, 2018). Approximately 70% of manufacturing costs are attributed to design decisions such as materials and manufacturing methods but the remaining 30% are impacted by production decisions, so if the focus is put on design optimisation then this 30% can be greatly affected (Crease, 2018).

When using DFM there are a lot of aspects which can be considered to produce the optimal design for manufacture. Using parts which can be shared between different parts of a product allows much quicker production as it will reduce the amount of tooling required and the time taken to set up different tooling. In my design I will ensure that the bushes used are both the same so they can be made in the most efficient way. The body will also be made of 2 identical halves to speed up production time and the need for numerous tools. If any fasteners are included in the final design then I will make sure that these are standard components which can be sourced easily, rather than having to be produced individually during the manufacturing stage. This will speed up the process and allow for the fasteners to be bought in bulk rather than having to produce them individually, per unit. Any fasteners which are included will be designed into the product in a manner that enables them to be push or snap fit and should also be self-aligning. Using this method will eradicate the possibility of errors within the assembly process.

I will also need to design a product that is sustainable. Much of the sustainability comes from the manufacturing processes used and the use of sustainable materials but there are also parts of the design which can be altered to make a more sustainable product. One way I will do this is to make the product maintainable, doing this will enable the customer to replace a single part of the tool if it fails rather than having to dispose of the whole tool and then buy another one. I will do this by including a means of removing the bushes and the gears which are the 2 parts of the tool which could fail over time. Making it easy to remove these parts and replace them individually will reduce the waste and will save the customer money, as they will not require a full replacement of the tool if a single part fails. During this aspect of the design it is essential that I focus on the design for assembly, as previously mentioned, including self-aligning parts and non-threaded fasteners which can cause assembly problems. The use of standard fasteners will also allow the customer to replace these if they are damaged without having to come back to the manufacturers.

Final Design

In the development of the concept design, the alterations that I made were focused on designing for manufacture and sustainability and this is reflected in the final design (Appendix 6). The first change that I have made to the design is the introduction of circlips to the tool. These circlips, which fit into the grooves that will be machined into the body of the tool, are included to hold the bushes in place around the shaft of the gear. This alteration was made to ensure sustainability of the product, making it as easy as possible to replace the damaged or worn bushes rather than the whole tool. This was an aspect of the initial design which needed addressing as originally, they were an interference fit and had no way of removing and maintaining them.

The use of the circlips to hold the bushes in place was decided upon due to the use of a Poka Yoke approach to assembly (RNA Automation, 2019). Poka Yoke is a mechanism used to eliminate mistakes by essentially making it impossible to do something incorrectly (RNA Automation, 2019). Threaded fasteners are an area where mistakes can be made in an assembly process, through cross threading, under torqueing and over torqueing. Each of these mistakes could be detrimental to the tool's performance. The use of circlips takes this issue away due to them self-aligning and not requiring any tightening to function correctly.

The QFD highlighted that the priorities of the customer were that they wanted a durable tool which was affordable. With the cost being a high priority aspect of the customer's desires, I did not opt to change the bushes, used in the concept design, to a bearing on either side of the tool as I had considered. This is because there would have been a requirement for four bearings to be used in the tool which would have been a lot more costly than the use of the bushes. The durability would also have been an issue if bearings were used as they would have taken away the maintainability of the product which would prolong its lifespan, as there would be no way easy way of removing them from the housing and shaft, without causing damage to other parts of the tool.

Conclusion

Throughout the development of this design, from constructing the original concept design to the final design, I have made many changes to best meet the customer's needs. The final design which I have produced delivers on the customer's specific desires, and this has been achieved through my use of the QFD to distinguish what the customer's priorities were and how this would impact other parts of the project.

The use of design for manufacture and sustainability has impacted the way that I designed certain aspects of the tool in order to successfully achieve the desires of the customer. This was done through the use of sacrificial parts which could easily be maintained, so the customer was able to replace these individual parts rather than the whole tool. The success of this aspect of the design was also down to the focus on incorporating Poka Yoke into the design, as a way of error proofing the assembly process and reducing the need for many tools to remove individual parts, speeding up both the manufacturing and the maintenance processes.

In comparison to other similar products which I looked at in the QFD, the concept design was lacking in some of the criteria specified by the user. The best ranked competitor through my research was the Amtech Universal Joint (Amtech, n.d.)which was the superior tool for carrying out the same job as this design. The final design that I have produced is now much closer to the competitors in all aspects stated in the QFD and there is no area where it lacks behind the competition. Overall, the final design of this product has been a success, as the tool is able to successfully meet all the demands of the original design brief and performs well against all the criteria identified in the QFD.

Materials

Joseph Garland

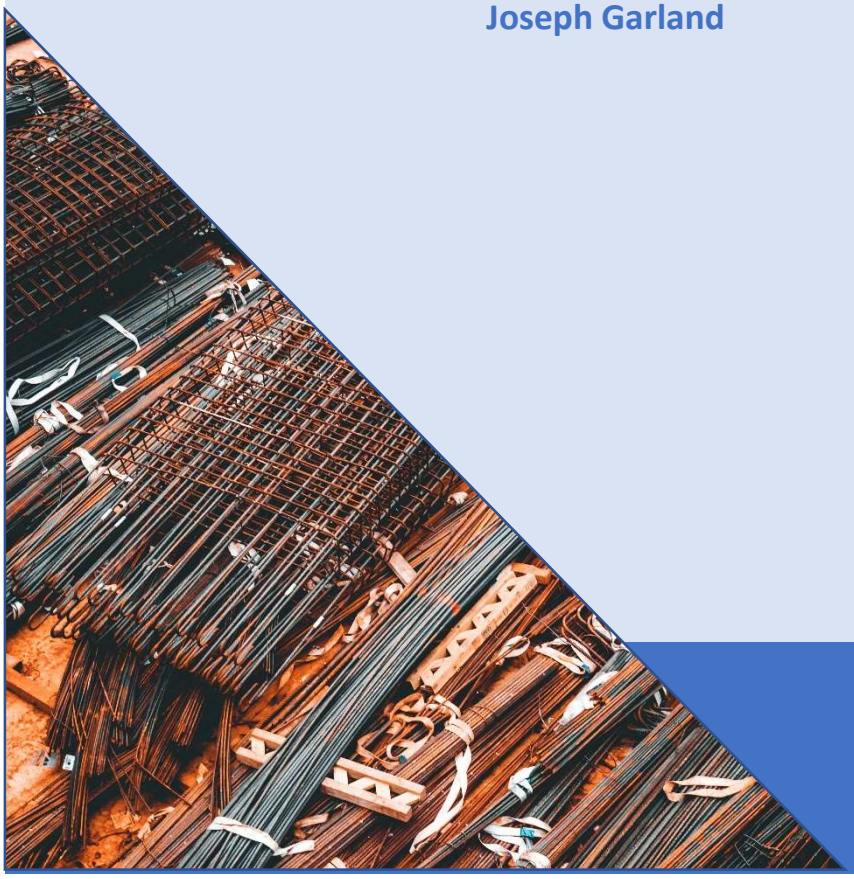

Summary

The following report contains a detailed look into all material considered for the production of the angled ratchet adaptor. A wide variety of materials were looked at during the study ranging from multiple different polymers and metals. The team were views Polymers and metals as the most appropriate materials for consideration for the ratchet adaptor due to previous experiences using ratchet's and ratchet attachments within industry.

When evaluating suitable material for the production of the rachet adaptor components, it was seen essential to gather as much information on each material as possible. Information such as material properties, uses, cost and manufacturing processes were all taken in order to form an educated opinion of the most suited material for each component.

This study has been highly beneficial to the group as aids manufacturing and design processes allowing for a high-quality product to be manufactured.

Introduction

This report will consider a range of materials that would be suitable to create the ratchet adaptor. It will look at materials such as Metals and Polymers. It will consider the properties of the materials as well as compare them to other similar materials.
For this product, certain properties are required. These properties include:

- Wear Resistance.
- Abrasion resistance.
- Durable.

Some other properties will be of use but will not be detrimental to the production of this product.

Metals

1. Tool Steel.

Tool steel is widely used throughout industry. They are normally alloyed with other materials to improve certain properties. They have a high level of hardness and abrasion resistance. (astmsteel.com, 2020) explains that there are six different forms of tool steel which are listed below:

1. Water-Hardening Group.
2. Cold-Worked Group.
3. Shock-Resisting Group.
4. High Speed Group.
5. Hot-Working Group.
6. Special purpose group / Plastic Mould Steel.

Each of these have positive and negative aspects. This will look at the Shock-resisting group. This is because the it would be the most suitable. This has been chosen because it is able to resist shock at

both low and high temperatures. This type of steel contains between 0.5-0.6 % carbon and around 3% nickel and has an HRC between 58/60.

2. Stainless Steel

Another possibility is to use an alloyed steel. This is when other metals are added so that certain properties can be improved, and certain defects can be removed. This would include stainless steel. Steel on its own has a number of defects that could cause problems but by adding other metals, these defects can be negated. (Encyclopaedia Britannica, 1998) states that stainless steel has a low carbon content as well as the addition of chromium. This ensure that it is corrosion resistant whilst also improving its heat resistance. Other metals such as nickel, aluminium and titanium can be added to improve its corrosion resistance.

(Encyclopaedia Britannica, 1998) also explains that Martensitic steels that normally contains 11.5 to 18 percent Chromium and 1.2 percent Carbon and occasionally having nickel added to the mix. This form of stainless steel can be heat treated unlike some other forms of the material. It also lists some of the uses for this version of stainless steel which have been listed:

- Cutlery.
- Surgical Instruments.
- Wrenches.
- Turbines.

This would make it very suitable for this projects purpose as it is already used to create wrenches.

3. Carbon Steel.

(MatMatch.com, 2020) states that there are three types of carbon steels. These three are:

- Low-Carbon Steel
- Medium Carbon Steel
- High Carbon Steel

The names indicate the amount of Carbon used within the steel. Low carbon steel has less that 0.25 percent carbon within its structure. Medium has 0.25 – 0.60 percent carbon. Carbon steel has between 0.60 and 1.25 percent carbon. The amount of carbon in the steel also has an effect on the steels structure. Low carbon steel has a Ferrite/Perlite structure, medium carbon steel has a Martensite structure and high carbon steel has a pearlite structure.

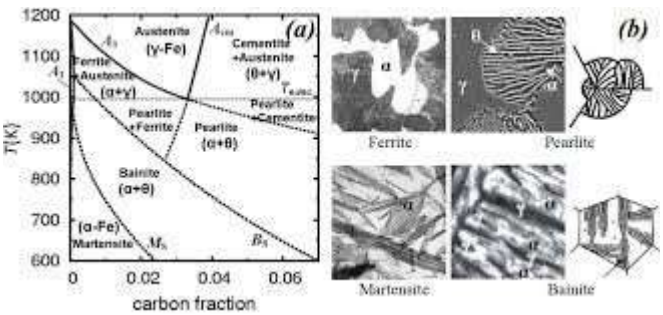

Figure 1 - Carbon content and structures of steel

The most applicable of these three for the creation of the ratchet adaptor is the medium-carbon steel as it is already used in used to make gears. This would be suitable for the internal mechanisms of the adaptor.

Polymers

Plastics are a material that can be moulded into various different shapes and can contain drastically different properties. These properties include:

- Low Density.
- Toughness
- Low electrical conductivity

Plastics can be placed into two groups. Thermoplastics, plastics that can revert to its original shape using heat, and thermosetting plastics, plastics that cannot change its shape even if heat is applied once it has originally set.
(Rodriguez, 2020) provides examples of various plastics which will be investigated. These include:

- Polyethylene Terephthalate
- Polymethyl Methacrylate
- Polyamide
- Polycarbonate
- Epoxy

1. Polyethylene Terephthalate (PET)

(Encylopeadia Britannica, 2009) states that PET is a strong and stiff fiber polymer that comes into the thermoplastic group of plastics. It is also an exceptionally light weight material compared metals and some plastics. It can be used in a temperature ranging from -60 to 130°C (Omnexus, 2020). It is used in three main industries which have been listed below:

- Textile Industry
- Electronics and Electrical Industry
- Automotive Industry

This material can be used in manufacturing processes such as 3D Printing, Blow Molding, Injection Molding and Extrusion. This will be investigated further in the report focused on the manufacturing process of the product.

2. Polymethyl Methacrylate (PMMA)

(Omnexus, 2020) is commonly known as acrylic glass due to it being made by melting plastic granules and its transparent coloration. It is half the weight of regular glass. It falls into the thermoplastic category of polymers. Acrylics can be used for many different purposes, some of which are listed below:

- Architecture and Construction
- Lighting
- Medical and Healthcare
- Furniture

Unfortunately, PMMA does not have good wear resistance which is one of the main properties required for this product. It also has a limited teat resistance of around 80˚C which may be too low for the products requirements.

3. Polyamide (PA).

(Omnexus, 2020) explains that polyamide is also known as nylon. These types of thermoplastics are used extensively throughout the engineering industry as it has a good balance of properties. There

are man different variations of nylons that contain multiple properties and are dependent on the chemical structure of it. This will look at Polyamide 66. This nylon has many properties including:

- High strength and stiffness at high temperature
- Good abrasion and wear resistance
- Good fatigue resistance

Along with many other properties that are not as important to our product. It is widely used in Building and Construction, Transportation, Electricals and Electrical.

4. Polycarbonate (PC).

(The Plastic People, 2020) writes that "Polycarbonate is a tough and stable clear plastic" whilst also boasting "light transmission, incredible high strength (whilst being incredibly light in weight) and resistant to stresses both accidental and intentional". (Federation, 2020) lists some other properties of PC which have been listed below.

- Tough
- Stiff
- Rigid (up to 140˚C)
- Toughness (down to -20˚C)

5. Epoxy

Epoxy is a thermoset plastic which is made as a result of a reaction that takes place between two or more chemical compounds. (Hotmelt, 2020) states that "Epoxies are made up of chains of carbon linked to other elements such as hydrogen, oxygen or nitrogen". The link created between these elements is a covalent bond, which means elements share a pair of electrons in order to stay together. (Threebond, 2020) and (Omnexus,2020) note that some of the properties of epoxy are as follows.

- Adhesive strength
- Low shrinkage
- Tensile strength ranges between (90-120 Mpa)
- Electrical insulator
- Chemical and solvent resistant
- Hardness
- Heat dissipation (glass transition temperature range between 150 to 220 Celsius)

Sustainable Materials

A sustainable material is a material that has a positive effect on the environment in which it is situated. (Simplicable, 2018) suggest that sustainable materials can be defined by a number of different characteristics. These characteristics include the following;

- Health
- Source
- Environmental impact
- Economical
- Efficiency
- Quality of life
- Resilience
- Renewable
- Reusable
- Emotionally Durable
- Waste

After evaluating the characteristics listed it was found that some of the characteristics were more relevant to the project than others. The characteristics found to be more relevant to the product in this project were efficiency, economical, resilience and reusable.

1.1 Efficiency

An efficient material uses very little resources in relation to its value. It is a material that used to within the production of efficient products. For example; when considering material for bodywork of a car the manufacturer would look to choose as light a material as possible whilst maintaining the required structural integrity. They would look to do this in order to keep passengers as safe as possible whilst having as little effect on fuel efficiency of the car as possible. This is due to heavier cars burning more fuel during use than a lighter car.

1.2 Economical

An economical material must be able to be produced at a reasonable cost in relation to the sale price of the product. Manufacturers must aim to create a product that is low cost to produce yet still maintains high production quality, this will ensure the product has a long life span and can be competitively prices within its intended market.

1.3 Resilience

A resilient material is a material that is capable of enduring high levels of stress over short or long periods of time, must be able to operate in many different environments and must be able to be effectively used on a frequent basis. For example, a manual hand tool such as a hammer must have an extremely high level of resilience in order to cope with the constant impacts it is subjected to. This would mean the most appropriate material must be selected for its production to guarantee the hammer is capable of performing effectively during its intended use.

1.4 Reusable

A reusage material is determined by whether it can perform as expected more than one time. The reusability of a material can in some cases can effect the sustainability of a material that isn't renewable. Reusable materials often originate from waste as they are able to be recycled and used again. An example of a reusable material would be metals such as steels and aluminium. Metals are widely recycled materials that can be melted down to their original preformed state before being used to make other products.

2.1 Reusable metals

When considering materials for the angled adaptor for a ratchet the team decided that as a way of making the product more environmentally friendly that almost all of the materials used to construct it should be fully reusable/recyclable. After establishing this it was agreed that in order to meet the product specification the most suitable materials for the product would be metals. Some of the more commonly used reusable metals include:

- Steel
- Copper
- Brass
- Aluminium
- Cast Iron

2.2 Steel

Steel is globally recognised as on of the world most durable and long-lasting materials. As a result of this steel is probably the most commonly used metal in the world. Steel is extremely versatile and can be used in a wide variety of applications such as structure beams used in construction, tools such as hammers or spanners and heavy machinery. It is suitable for all these applications due to its ability to withstand high levels of stress over time.

Steel is an alloyed metal meaning it is made up of more than one metal/element. The primary metal used to create steel and almost every other metal alloy is iron. Iron is then combined with carbon to create steel. The amount of carbon used to make steel although always small will vary depending on the desired material properties.

The material properties steel is best known for is its toughness, durability and hardness. As a result of these qualities steel has a very high melting point of around 1510 degrees Celsius. Steel also has a very high density of 7982kg/cm³ which is almost 8 times that of the density of water as stated by (Sciencing, 2020). Steel inherits its hardness and strength through the amount of carbon added during the process of creating steel. Steel has a relatively high tensile strength when compared to other materials however its actual tensile strength can vary from anywhere between 290N/mm² to 870N/mm². The hardness of steel can also vary depending on the carbon content and the type of hardness test carried out on the steel. Using Hardness Rockwell mild steel typically ranges between 58-71 HRC as stated by (Azahner, 2020).

2.3 Copper

Copper is used widely across the world for a number of different applications but its most common application is in electrical wire/cable. Copper is a ductile and malleable metal which can be easily manipulated with no effect to its structural qualities. Perhaps the main reason copper is uses within electrical cable is it has excellent conductive properties allowing both heat and electricity to transfer through it very easily. Other uses for copper include pipework, roofing and building material.

Copper has a melting point 1083.4 degrees Celsius, having high melting point helps copper in its numerous conductive applications as heat is often transferred during electrical conductivity. The tensile strength of copper is relatively low due to its high level of ductility and ranges between 210N/mm² to 390N/mm². (Azom, 2020) states other physical properties of copper include a hardness of 33-25HRC and a density of 8944kg/m³.

2.4 Brass

Like steel brass is an alloy, the two main materials used to create brass is copper and zinc. As per (Thoughtco, 2020) the amount of copper and zinc used in making brass can vary with percentage copper ranging between 55-95% and zinc ranges from 5% to 45%. Brass is used in both industrial and commercial applications and can be found used in products such as bearing bushes and musical instrument.

Brass has a relatively low melting point of 885-900 degrees Celsius which is comparatively low when considered against that of steel or copper. (Ezlok, 2020) states that brass has a density of 8587kg/m³, a tensile strength of between 124-310 N/mm² and a hardness of 70-78 HRC.

2.5 Aluminium

Aluminium is one of the most abundant natural metals on earth and as a result is used globally for an extremely wealth of different applications ranging from bike frames to aeronautical

products. Aluminium popularity across the world may be due to its versatility when it come to its physical properties. (Metalsupermarket, 2016) lists some of the physical properties aluminium has;

- Lightweight
- Strong
- Corrosion resistant
- Durable
- Ductile
- Malleable
- Conductive
- Odourless
- 100% Recyclable

Aluminium has a very low melting point in comparison to other common metals with temperature needed to cause it to disform ranging between 582-652 degrees Celsius (Asm, 2020). It is stated by (Asm, 2020) that aluminium has a tensile strength on 310N/mm² and a hardness Rockwell value of 40-60HRC. Aluminium also has a low density of 2705kg/m ³ when looked at comparatively with materials such as steel, this allows it to be used for a number of lightweight applications.

2.6 Cast Iron

Like steel cast iron is made by alloying both iron and carbon together. However in cast iron the carbon content within the material is much higher usually ranging between 2-4% carbon. The higher carbon content within cast iron makes it a lot harder than steel and subsequently it also makes it more brittle. (Introduction to Cast Iron: History, Properties, and Uses, 2020) states a few of the most common mechanical properties of cast iron are as follows;

- Hardness
- Toughness
- Ductility
- Malleability
- High tensile strength
- High fatigue tolerance

Cast iron has a density of 7300kg/m³ and a melting point ranging between 1127-1204 degrees Celsius. (Matweb, 2020) lists cast iron has a tensile strength of 1650N/mm² and a hardness rockwell rating of between 11.4-65 HRC.

Material Cost

When trying to find the most suitable materials for the product the cost of raw materials must be carefully considered in order to create the most cost effective product. During the design specification and numerous group meetings there were discussions held within the group to suggest potential materials fit for purpose on the product. Following the study carried out into all potential materials the most suitable materials were deemed Aluminium, Brass, Steel and Cast iron. The cost of Raw materials for the selected to produce the Angled ratchet adaptor were as follows.

- Steel £0.06 per kilogram
- Cast Iron £0.06 per kilogram
- Aluminium £0.60 per kilogram
- Brass £2.50 per kilogram

Conclusion/Recommendations

After careful consideration of the material properties and cost of the materials suggested for the product by the team. It was decided that the materials to be used for the production of the angled ratchet adaptor were to be cast iron, mild steel and brass.

Cast iron was decided to be used for the internal bevelled gears. Cast iron was chosen due to it high fatigue tolerance. It was deemed essential this part of the product had a high fatigue tolerance as it will be the part of the product that will experience the most work due to rotation.

Mild steel was decided to be used on the product for its outer housing. For this part of the product it was decided the material needed to have a good resistance to wear as it would be the part exposed to the external environment. It was also chosen as it is of relatively cheap cost and can be easily sourced and manufactured to the desired shape.

Brass was chosen to be used to produce the sacrificial bush surrounding the gear shafts. The main reason for the selection of brass was that it is self-lubricated. This allows the product to be made without the use of bearings. The decision helps easy the process of assembling the ratchet adaptor as well as reducing the potential cost of production

Manufacturing

Rhodri Williams

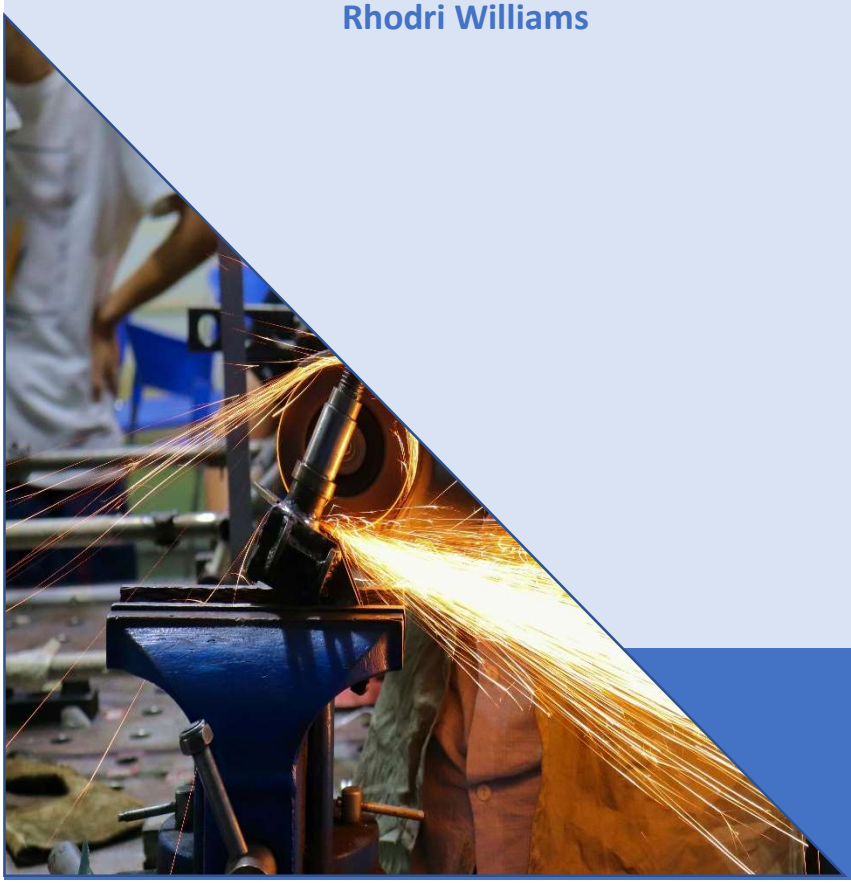

I have been tasked with the how to manufacture of our product. With the design and materials selected to be used for each component finalized, efforts are directed to exploring the different manufacturing processes available and deciding on the most efficient, cost effective and sustainable options for each.

Manufacturing Processes

1. Additive Manufacturing
2. Investment Casting
3. Machining
4. CNC Machining
5. Heat Treatment

Additive manufacturing

Additive manufacturing, commonly known as 3D printing is a manufacturing process that functions by applying continuous layers of the desired material to create the object. 3D modelling software such as SolidWorks, Inventor and AutoCAD are used to create totally new and unique designs, or simply update original designs before being transferred directly from digital files and drawings to the printer.
The cost of entry has been a major obstacle for smaller manufacturing companies with the cost of equipment often being too expensive to justify, however, new technologies have driven the costing of new equipment down substantially in recent years and according to (Brand, 2020)a reliable industrial quality machine can cost as low as £3,500.
The creative freedom given with additive manufacturing really brings design and innovation to the forefront, by moving away from traditional manufacturing which can lead to significant cost and time penalties being incurred when design modification is required. Additive manufacturing moves away from static designs and tooling enabling multiple versions of a design to be created in a cost-effective way.
As additive manufacturing adds material layer by layer it cuts waste material significantly when compared to traditional manufacturing. Traditionally material is removed from a larger block of material in the form of shavings or kindling that cannot be reused, ending up as waste. Material waste and cost can be reduced by as much as 90% according to (Brand, 2020)
Due to having less production steps and by using less material, additive manufacturing can reduce energy cost significantly.
Although additive manufacturing seems the perfect process going forward, it is not without its drawbacks. Due to having a lower quality surface finish the dimensional accuracy can be compromised slightly requiring post processing. Large scale production is also difficult due to a small number of parts being able to be printed at a time, and due to the layering of the process, the multiple interfaces can lead to defects and poor mechanical properties. (ACMA, 2015)

Investment casting

Investment casting is a manufacturing process to where a wax pattern of a component is created by injecting hot wax into the tool or die. Once the required number of components have been created from wax, they are connected to a was runner system knows as a tree, either by gluing or melting the components on. Once this has been completed, the trees undergo a series of shelling operations where ceramic is applied layer by layer until the required thickness has been met. Once the ceramic layers have dried the wax from the trees is removed using an auto clave leaving a hollow ceramic cast. The desired material is melted in a furnace and then poured into the cavity and left to cool. Once cool, the ceramic is knocked off, and components cut away from the tree. (Kopeliovich, 2012)

Investment casting has the capability to cast thin walls with tight dimensional tolerances, along with excellent surface finish. A wide range of metals and alloys can be cast giving freedom for designers to be specific with material choice, and with material left over from the process simply being re-melted and used again the waste for this process is relatively low.
Complex shapes and designs can be produced, although there are only limited casting dimensions available due to the tooling required. Individual patterns are required for each casting, and with the cost of tooling, labor costs and the number of process steps involved, investment casting can have a relatively high cost when compared to additive manufacturing, although mass production of a component is far more viable using this method. (Cirex, 2020)

Machining

Machining includes a wide range of techniques and technologies and is loosely defined as the process of removing material from a workpiece shaping it into an intended design. Most metal components require some form of machining during manufacture, whether it is solely for the surface finish, or to precisely refine the component to specific tolerances.
Machining tools can be used alone or combining with other tools at different stages of manufacturing to achieve the intended geometry of the part.
Major machining tool categories:

- Cutting – Cutting tools such as saws and shears are used to cut materials, such as sheet metal into a desired shape.
- Boring – Typically finishing equipment that enlarge holes previously cut.
- Drilling – Two-edges rotating tools that create round holes.
- Milling – Rotating cutting surface with multiple blades used to create unique designs and non-circular holes.
- Turning – Equipment such as lathes us a cutting tool with a workpiece rotating on its axis to shape its form.
- Grinding – Rotating wheel used to make light cuts into a workpiece or achieve a fine finish. (Thomasnet, 2020)

CNC Machining

Compute numerical control machining (CNC) uses programming and software to guide machining tools to shape a component to preset parameters. As this method is automated by the computer, there is a low labor cost and usually requires minimal downtime or maintenance allowing for a fast production rate, particularly for production runs that are high in volume. A uniform production of components typically gives a precise and high-level design consistency.

Heat Treatment

Heat treatment changes the physical and mechanical properties of metals by the heating and cooling the material usually to extreme temperatures to achieve the desired result. Heat treatment is not only a method to strengthen a material but can also alter mechanical properties to improve machining and formability.
Hardening – Involves heating of the material and keeping it at an appropriate temperature and then rapidly quenching it in oil or water.
Tempering – Once the material has been heated and quenched, tempering can take place. Heating the hardened material for a specific period of time to the material becomes equilibrated. Lower temperatures will produce high strength and hardness, whilst higher temperatures will produce low hardness and strength but higher ductility.

Annealing – Used to enable the material not to fail under large strains. Involves heating the material to high temperatures and allowing it to cool very slowly by leaving it in the oven as it cools. The resulting microstructure will produce low hardness, but high toughness and ductility.
Normalizing – Letting the material cool in air once heating has taken place. Higher hardness and strength are achieved as well as lower ductility and improves the machinability of the material.
(Heat Treatment of Steels & Metals, 2009)

Manufacturing Process Proposal

Investment Casting

Firstly, the shaft/bevel gear component will be manufactured by casting. Investment casting has been chosen as the method to use for this specific component due to its ability to create relatively complex geometric shapes, and good surface finishes. Once the component is cast in its rough shape, machining costs will be cut due to less material needing to be removed. Below is a flow chart of the investment casting process:

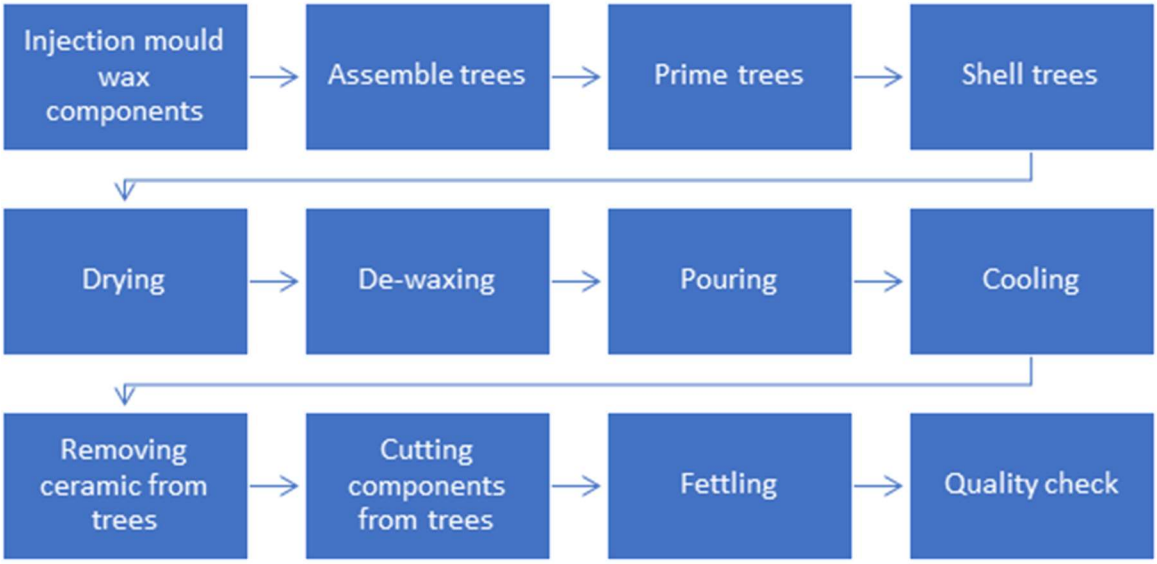

Once the components have gone through each step, and quality checked they are sent for heat treatment.

3D printing of housing

The housing is to be 3d printed in mild steel. Additive manufacturing has been chosen for the housing due to its exceptionally low carbon footprint when compared to other manufacturing process, as well its ability to quickly print complex components. Print speed it unique to the printer, type of material used and part geometry and can range from 25 cubic centimeters per hour to 1000 cubic centimeters per hour. According to (Huckstepp, 2020) the average print time ranges between processes from a matter of hours to around a week. Utilization rates are affected greatly by this. Running the printer for a week at a time, with the printer being unloaded and loaded frequently is likely to have a yearly printing time off 2,000 hours per year. Complex designs can be created without having tooling to consider.
Additive manufacturing has a number of steps between the original virtual CAD software model and the resultant completed part. Additive manufacturing steps:
Computer Aided Design – The component will start life as a virtual model describing its external geometry using almost CAD software, with the output being a tree dimensional solid representation.

Conversion to STL – Stereolithography (STL) is the file format accepted by almost every additive manufacturing machine, with every computer aided design system being able to output the file format. The converted file details the original CAD models external closed surfaces.
File Transfer – The STL file is transferred to the printer, where some general file manipulation is preformed so that the correct position, size and orientation for building is present.
Machine Setup – Prior to building to printer must be properly set up. Building parameters such as material constraints, layer thickness, timings and energy source are the settings to be considered.
Building – The creation of the component. This step is automatic and requires little to no supervision, although it may be wise to superficially monitor this step to ensure ample material is supplied to the printer, and no software glitches have been carried over along with checking power is keeping the machine running.
Removal – Once the build is complete the parts must be removed. Interaction with the machine may be required such as removing safety interlocks. Safety measures may be in place to ensure no injury to the operator such as temperatures have cooled enough, moving parts have ceased.
Post Processing – Finishing the parts for application purposes. This can involve abrasive finishing such as sand blasting and polishing. Depending on the results in terms of accuracy, components can often need machining, as well thermal or chemical treatment of the part to achieve desired component properties.
In the case of the 3d printed housing for our product, heat treating is required and therefore carried out to harden and strengthen its properties before the interior is machined using a CNC milling machine to get into specification.
Application – The components are now ready for use, however additional treatments such as painting, or priming may be required to give an acceptable finish or surface texture.
As our 3d printed component is part of a larger assembly, the application step for the part is to combine it with a previously manufactured component, fasten it together to form the final product and preform quality checks. (Gibson, Rosen and Stucker, 2010)

Heat Treatment of Components

Once the components have been cast and printed, the next step is to heat treat the components to alter their mechanical properties to increase ultimate tensile strength, yield strength, hardness and decrease elongation. This is to be done to ensure the part can withstand high levels of torque when in use.
Firstly, both components are to be heated to 900 degrees Celsius and allowed to homogenize for 2 hours at that temperature. The components are carefully removed and quenched in water. Water has been choses over oil as according to (E., Kamal and Ogunjirin, 2020), specimens quenched in water proved superior with respect to yield point, toughness, Brinell hardness and strength.
The next and final step for both components before machining is to temper.
Tempering is to be done at 250 degrees Celsius for 1 hour. This temperature and duration have been selected to maximize ultimate tensile strength[648MPa], yield strength[369MPa], hardness [42] as well as having the lowest elongation percentage [7.14%]. (Shekhar and Jaiswal, 2008)
In contrast if tempering were done for 2 hours then the results would change to:
ultimate tensile strength = 570MPa,
yield strength = 322MPa,
hardness = 33
elongation percentage = 9.42%
And if tempering were done at 650 degrees Celsius for 1 hour:
ultimate tensile strength = 386MPa,
yield strength = 277MPa,
hardness = 31
elongation percentage = 17.857%

Machining Spindle Speed and Feed Rates

The first step for machining the cast gear/shaft component is to turn the workpiece using a lathe. The material of choice when selecting tools for turning operations are Cemented Carbides. Cast iron has a typical feed rate of 0.25mm/rev. With this information the spindle speed and feed rate can be calculated. (Morgan, 2020)

$$\text{Spindle Speed (rev/min)} = \frac{1000 \times \text{Cutting Speed (m/min)}}{\pi \times \text{Work Diameter (mm)}}$$

Spindle speed = (1000x100) / (π x 20)
= 1591.55rpm

This data can be used to determine the feed rate in mm/min.

Feed Rate (mm/min) = Feed Rate (mm/rev) x Spindle Speed (rev/min)
= 0.25 x 1591.55
= 397.89 mm/min

Milling operations are the next step of manufacture and will be used to machine the bevel gear end of the component. The gear teeth are relatively complicated surfaces and for geometric accuracy to be guaranteed three stages of machining will be required. Volume milling will be used for the first rouging cut using a 2mm flat-end mill. Profile milling sequence will be used for the second sequence for semi finishing and will use a 1mm flat-end mill. For the final finishing run, a surface milling sequence will cut the teeth surfaces using a 1mm ball-end mill, bringing the component into its design specification (Van Tuong, 2018). A high-speed steel tool can be used for all milling operations for this component. The spindle speed is calculated as follows:

Roughing Cut:

$$\text{Spindle Speed (rev/min)} = \frac{1000 \times \text{Cutting Speed (m/min)}}{\pi \times \text{Tool Diameter (mm)}}$$

= (1000 x 18) / (π x2)
= 2864.8 rpm (1dp)

Typical Feed Rates for Milling (mm/tooth) using high speed steel cutters on cast iron is 0.18mm/tooth.

This data can be used to determine the feed rate in mm/rev.

Feed Rate (mm/rev) = Feed Rate (mm/tooth) x Number of teeth
= 0.18 x 4 = 0.72mm/rev

From this,

Feed Rate (mm/min) = Feed Rate (mm/rev) x Spindle Speed (rev/min)
= 0.72 x 2864.8
= 2062.7 mm/min (1dp)

Semi-finishing Cut and Finishing Cut:

Spindle Speed = (1000 x 18) / (π x1)
= 5729.6 rpm (1dp)

Feed Rate = 0.72 x 5729.6
= 4125.3 mm/min (1dp)

Assembly Flow Chart

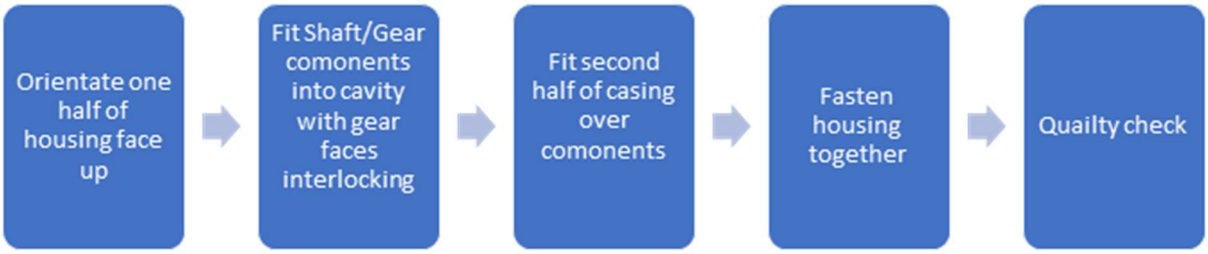

Conclusion

Having explored different manufacturing processes and what benefits and drawbacks they each have a decision was made for each component about which process to use for manufacture.
Investment casting was chosen over additive manufacturing for the Shaft/Gear component due to the components shape and function. It was important for the process to maximize the strength of the material choice due to the torque that will be applied to the product when in use, with investment casting providing higher material strength over additive manufacturing.
For the products housing, additive manufacturing was selected for manufacture due to its speed of manufacture and low carbon footprint when compared to investment casting as well as the material strength not being as important as the shaft/gear. Although the components strength was not as important, it was important enough to heat treat to increase its overall strength.
Heat treatment was used to improve the strength of both components using optimal temperatures and timings to ensure maximum increases to the desired strengths and hardness.
Finally, the optimal machining conditions were calculated to ensure the most efficient machining operations for the materials selected.

Compliance/Regulations

Adam Sheppard

In this section I will be researching compliance and regulation laws. This is to ensure that we as a company are following the relative legislations that we are governed by. This section will focus mainly on British and European law.

What are regulations

The decision-making process determined the best idea for manufacture was the 'Right Angle Ratchet Adapter'. When looking to develop a new product it is important to notice that there are key legislations and therefore regulations to comply with. These vary depending on what type of product is being manufactured and in what working environment that product is being manufactured in.

A regulation is a type of UK Statutory Instrument. Legislation is the law that a company has the legal obligation to follow and a regulation defines and controls the ways the business must operate to comply with said law. (Tsunami Solutions Ltd, 2020)

I have researched and found what I believe to be the most relevant legislations/ regulations which will influence the manufacturing of the 'Right-Angle Ratchet Adapter'.

Manufacturing Regulations

To find what legislations and regulations were applicable for the manufacturing of the Ratchet Adapter, it was important to define what type of product this is. In my research I found that the tool fits within the legal definition for machinery.

The Supply of Machinery (Safety) Regulations 2008

Under the Supply of Machinery (Safety) Regulations 2008, Machinery is defined as *"an assembly, fitted with or intended to be fitted with a drive system other than directly applied human or animal effort, consisting of linked parts or components, at least one of which moves, and which are joined together for a specific application".* (HM Government, 2020a)

As the Right-Angle Adapter is an interchangeable component designed with the intent to be used on power tools such as a ½" air gun, it is mandatory that the directives are conformed with to satisfy this legislation. According to (Health and Safety Executive, 2020a) a manufacturer must ensure that the machinery:

1. Is safe to use and meats all the relevant health and safety requirements.

2. Has undergone a conformity assessment by a notified governing body and has received declaration of conformity

3. Includes a technical file, this includes having an instruction manual written in the main or recognised language of the intended audience and the declaration of conformity.

4. Is CE marked

As a manufacturer it is our duty to comply with the regulations listed above, we will achieve this by taking the following control measures:

1. A detailed risk assessment must be carried out to ensure that the product is safe to use. After completing the risk assessment hazards that noted must be mitigated as far as is reasonably practicable. All hazards that cannot be mitigated completely will be notified in the user's manual.

2. To satisfy the conformity assessment, we as a manufacturer need to demonstrate that all relevant legislations are conformed to. The product must also include required inspection, testing and certification. (European Commission, 2020)

3. Technical files will be provided with the product. Including: technical drawings of the product itself, the specifications and standards used in the design, the declaration of conformity and test relevant test certificates.

4. Prior to CE marking being applied to our product, as a manufacturer it is our obligation to follow all of the regulation under the Supply of Machinery (Safety) Regulations 2008 and any other regulations that our product is governed under European law. It is also our responsibility to have our product assessed for conformity before a CE marked can be put on to the product.

The Health and Safety at Work Act 1974

As a manufacturer of a part of 'machinery', we must also adhere to Section 6 of the Health and Safety at Work Act. According to the (Health and Safety Executive, 2020b) for anyone in the supply chain there is a general health and safety obligation. We are governed by this legislation as we are supplying a product that will be used in the workplace. The regulations also require us as a producer to provide adequate instruction and information on the safe use of our product.

Waste Materials Regulations

Manufacturing processes have a natural tendency to develop waste. However, there are strict regulations that govern how waste must be controlled, whether it is creating low amounts of waste or the correct disposal of. It is important that as a manufacturer we recognise and adhere to these regulations in a conscious effort to protect the planet.

According to the article '*What is commercial waste'* (Cook, 2019) business waste is defined as "*any waste product that is created through commercial activity*". Therefore, any waste that is created as a biproduct of the manufacturing process of the Right-angle adapter, will therefore have to be controlled under the appropriate legislations. These legislations and regulations are as follows:

Environmental Protection Act 1990

As a producer of waste, we have an obligation to follow the regulations set out under the Environmental Protection Act 1990. In the government document titled 'Waste Duty of Care Code of Practice' (Department For Environment Food & Rural Affairs, 2018), as a producer of waste we are also classed as a 'Waste Holder'. This article states that as a 'Waste Holder', we have 5 regulations to abide by. These regulations are:

1. Prevent any harmful or unauthorised disposal, treatment, or deposit of waste.

2. Prevent a breach by any other person to meet the requirements of an environmental permit or a breach of the permit conditions.

3. Prevent the escape of waste from your control.

4. Ensure that the correct authorisation is held by the person you are transferring the waste to.

5. Provide this person with an accurate description of the waste that is being transferred to them.

To comply with these regulations, we as a manufacturer will take the following precautions when handling waste:

1. Obtain the correct environmental permit for the type of wastes that will be creating and disposing of.

2. Remain within the limits of the environmental permit, this includes handling only a set amount of waste and adhering to the restrictions on the type of waste that can be handled. We are also required by law to put in place adequate measures to protect the environment and human health, such as the recycling of waste materials and the carrying out of risk assessments for the handling of.

3. To prevent the escape of waste, containers should be correctly labelled and adequate for the amount and type of waste materials. Containers should be suitable for the storage and transportation of said waste, capable of preventing leakage contamination and spoiling. Only

authorised personnel will be able to handle the waste to prevent any unnecessary accident or cross contamination.

4. Ensure that the person(s) that we transfer the waste to has a valid registration as a broker, carrier or dealer of waste. Waste can also be transferred to waste management operators who have either an environmental permit or an exemption to receive said waste.

5. Prior to the transferring of waste to another person we will ensure that a written description of the waste has been signed by us and the person receiving the waste. As we will only be producing non-hazardous waste, we will use the national electronic duty of care system "edoc". If there are any instances where for whatever reason hazardous waste is produced, we must the use consignment notes for its transferring.

Packaging Waste Regulations

Although not currently required by law our company will be making a conscious effort to abide by the regulations of creating packaging waste. How we look to comply with this section can also be found under the 'Product Marketing Fundamentals' section of the project in 'Packaging'.

Intellectual Property Regulations (Copyright and Patents)

As a company, it is essential to protect any intellectual property that the company has. This is to prevent it being used or stolen by competitors that are developing similar products. It is also vital that our company is fully aware of the regulations surrounding intellectual property, not only to protect our own, but to prevent an infringement on other companies and avoid legal punishment. According to (HM Government, 2020b), Intellectual property can be classed as any of the following:

- The name or brand of our product
- Our inventions
- The design of our product
- The things we make, write, or produce

With this in mind the regulations regarding the following intellectual property protection laws need to be implicated.

Copyright

Copyright protects an original idea that has been recorded in some form, from being copied, performed, or broadcasted without consent of the creator (Atom Content Marketing Ltd, 2020). Copyright does not need to be registered for and automatically applies in most instances, this is true in many countries through international agreements.
During the creation of our product, it is important to stay mindful of copyright infringements that can easily present themselves. It is our responsibility as a company to enforce copyright ourselves, it is important to keep original work and dated records for this instance.

Patents

As stated previously, Patents are a means of protecting an invention created either by an individual or a business. This gives the right to the inventor to prevent anyone from using, manufacturing, or selling the invention for a term of 20 years, but it is not mandatory (Pinsent Masons, 2012). To obtain a patent, there is certain criteria that the invention must meet, this includes:

1. It must be inventive or include an inventive 'step'
2. It must be new
3. It must be something that can either be used or manufactured

This is criteria that our Right-Angle Ratchet satisfies, making it a key regulation in the manufacture of our product. It would be beneficial to register our product and design to be patented, preventing illegal use, and allowing us to maintain a competitive edge. It is worth noting that a patent that is given in the UK only give the owner(s) rights within the UK. To prevent the invention from being stolen overseas, respecting patents would need to be obtained.
During the design process it is key that we research into any current patents that may prevent us from using any components or design features incorporated in our design. This would avoid any legal repercussions.

Conclusion

From my research I have gained an appreciation for the different forms of legislation and regulations that can affect our product. My finding highlighted the more prominent factors that needed to be met to ensure general compliance. I was also able to pinpoint infringements that could have had serious repercussions for us if we were not careful.
I found the overall process enlightening and opened my eyes to the amount of governing regulations that need to be satisfied during the development and manufacture of a product.

Appendices

[Appendix 1] Gantt Chart – LK

(Weeks 1 – 5)

RIGHT ANGLE RATCHET ADAPTER PROJECT

Matthew Isn't Here

Project Start: Friday, 3-Apr-2020

Display Week: 1

TASK	ASSIGNED TO	PROGRESS	START	END
Group Project	ALL	100%	03-Apr-20	26-Jun-20
Phase 1 Selection				
Task 1.1 Group Kick off Meeting	ALL	100%	03-Apr-20	03-Apr-20
Task 1.2 Idea Research	ALL	100%	03-Apr-20	10-Apr-20
Task 1.3 Initial Ideas	ALL	100%	03-Apr-20	10-Apr-20
Task 1.4 Idea Selection	ALL	100%	10-Apr-20	10-Apr-20
Task 1.5 Role Selection	ALL	100%	10-Apr-20	17-Apr-20
Phase 2 Planning				
Task 2.1 Create Group Meeting Log	LK	100%	03-Apr-20	03-Apr-20
Task 2.2 Create Gantt Chart	LK	100%	23-Apr-20	23-Apr-20
Task 2.3 Group Meetings	ALL	100.00%	03-Apr-20	26-Jun-20
Task 2.4 Complete Gantt Chart	LK	100.00%	03-Apr-20	26-Jun-20
Phase 3 Research and Design				
Task 3.1 Design	LC	100%	17-Apr-20	29-May-20
Task 3.11 Initial Design Idea	LC	100%	17-Apr-20	24-Apr-20
Task 3.13 QFD	LC	100%	24-Apr-20	01-May-20
Task 3.14 Design for X	LC	100%	01-May-20	08-May-20
Task 3.15 Final Design	LC	100%	08-May-20	22-May-20
Task 3.18 Conclusion	LC	100%	22-May-20	29-May-20
Task 3.2 Manufacturing	RW	100%	17-Apr-20	29-May-20
Task 3.21 Additive Manufacturing	RW	100%	17-Apr-20	01-May-20
Task 3.22 Investment Casting	RW	100%	17-Apr-20	01-May-20
Task 3.23 Machining	RW	100%	01-May-20	07-May-20
Task 3.24 Heat Treatment	RW	100%	07-May-20	15-May-20
Task 3.25 Manufacturing Process Proposal	RW	100%	15-May-20	22-May-20
Task 3.3 Marketing	MF	100%	17-Apr-20	29-May-20
Task 3.31 Target Audiences	MF	100%	14-Apr-20	21-Apr-20
Task 3.32 Existing Products	MF	100%	21-Apr-20	01-May-20
Task 3.33 Packaging	MF	100%	01-May-20	08-May-20
Task 3.34 Typical marketing tools	MF	100%	08-May-20	15-May-20
Task 3.35 Copyright and Patent laws	MF	100%	15-May-20	22-May-20
Task 3.4 Team Roles	TB	100%	17-Apr-20	29-May-20
Task 3.41 Belbin	TB	100%	20-Apr-20	02-May-20
Task 3.42 Mintzberg	TB	100%	03-May-20	15-May-20
Task 3.43 Maslow's Theory	TB	100%	16-May-20	28-May-20
Task 3.5 Materials	JG	100%	17-Apr-20	29-May-20
Task 3.51 Metals	JG	100%	17-Apr-20	01-May-20
Task 3.52 Polymers	JG	100%	01-May-20	15-May-20
Task 3.53 Sustainable materials	JG	100%	15-May-20	22-May-20
Task 3.54 Material Cost	JG	100%	22-May-20	29-May-20
Task 3.6 Coordination Tools	LK	100%	17-Apr-20	29-May-20
Task 3.61 Research Gantt Charts	LK	100%	17-Apr-20	30-Apr-20
Task 3.62 Log Books	LK	100%	30-Apr-20	01-May-20
Task 3.63 Procedures	LK	100%	01-May-20	09-May-20
Task 3.64 Critical Path Analysis	LK	100%	09-May-20	22-May-20
Task 3.65 Summary	LK	100%	22-May-20	29-May-20
Task 3.7 Compliance/ Regulations	AS	100%	01-May-20	29-May-20
Task 3.71 What are Regulations	AS	100%	01-May-20	08-May-20
Task 3.72 Manufacturing Regulations	AS	100%	01-May-20	15-May-20
Task 3.74 Waste Materials Regulations	AS	100%	15-May-20	22-May-20
Task 3.75 Intellectual Property Regulations	AS	100%	22-May-20	29-May-20
Task 3.8 Decision Criteria	AS	100%	17-Apr-20	01-May-20
Task 3.81 What are Decision Criteria	AS	100%	17-Apr-20	24-Apr-20
Task 3.82 Belbin's Role Matrix	AS	100%	17-Apr-20	24-Apr-20
Task 3.83 Weighted Decision Matrix	AS	100%	24-Apr-20	01-May-20
Task 3.84 QFD Table	AS	100%	24-Apr-20	01-May-20
Phase 4 Presentation and Project Package				
Task 4.1 Project Package	ALL	100%	29-May-20	12-Jun-20
Task 4.21 Create Package Template	LK	100%	29-May-20	29-May-20
Task 4.22 Compile individual Sections	ALL	100%	29-May-20	05-Jun-20
Task 4.23 Write out group evaluation	ALL	100%	05-Jun-20	12-Jun-20
Task 4.25 Complete Project Package	ALL	100%	12-Jun-20	12-Jun-20
Task 4.2 Powerpoint Presentation	ALL	100%	12-Jun-20	26-Jun-20
Task 4.11 Create Presentation Template	LK	100%	12-Jun-20	12-Jun-20
Task 4.12 Complete individual slides	ALL	100%	12-Jun-20	19-Jun-20
Task 4.13 Compile and Practise Presentation	ALL	100%	19-Jun-20	26-Jun-20
Task 4.14 Present Presentation	ALL	100%	26-Jun-20	26-Jun-20

(Weeks 6 – 10)

Project Start:	Friday, 3-Apr-2020
Display Week:	6

TASK	ASSIGNED TO	PROGRESS	START	END
Group Project	ALL	100%	03-Apr-20	26-Jun-20
Phase 1 Selection				
Task 1.1 Group Kick off Meeting	ALL	100%	03-Apr-20	03-Apr-20
Task 1.2 Idea Research	ALL	100%	03-Apr-20	10-Apr-20
Task 1.3 Initial Ideas	ALL	100%	03-Apr-20	10-Apr-20
Task 1.4 Idea Selection	ALL	100%	10-Apr-20	10-Apr-20
Task 1.5 Role Selection	ALL	100%	10-Apr-20	17-Apr-20
Phase 2 Planning				
Task 2.1 Create Group Meeting Log	LK	100%	03-Apr-20	03-Apr-20
Task 2.2 Create Gantt Chart	LK	100%	23-Apr-20	23-Apr-20
Task 2.3 Group Meetings	ALL	100.00%	03-Apr-20	26-Jun-20
Task 2.4 Complete Gantt Chart	LK	100.00%	03-Apr-20	26-Jun-20
Phase 3 Research and Design				
Task 3.1 Design	LC	100%	17-Apr-20	29-May-20
Task 3.11 Initial Design Idea	LC	100%	17-Apr-20	24-Apr-20
Task 3.13 QFD	LC	100%	24-Apr-20	01-May-20
Task 3.14 Design for X	LC	100%	01-May-20	08-May-20
Task 3.15 Final Design	LC	100%	08-May-20	22-May-20
Task 3.18 Conclusion	LC	100%	22-May-20	29-May-20
Task 3.2 Manufacturing	RW	100%	17-Apr-20	29-May-20
Task 3.21 Additive Manufacturing	RW	100%	17-Apr-20	01-May-20
Task 3.22 Investment Casting	RW	100%	17-Apr-20	01-May-20
Task 3.23 Machining	RW	100%	01-May-20	07-May-20
Task 3.24 Heat Treatment	RW	100%	07-May-20	15-May-20
Task 3.25 Manufacturing Process Proposal	RW	100%	15-May-20	22-May-20
Task 3.3 Marketing	MF	100%	17-Apr-20	29-May-20
Task 3.31 Target Audiences	MF	100%	14-Apr-20	21-Apr-20
Task 3.32 Existing Products	MF	100%	21-Apr-20	01-May-20
Task 3.33 Packaging	MF	100%	01-May-20	08-May-20
Task 3.34 Typical marketing tools	MF	100%	08-May-20	15-May-20
Task 3.35 Copyright and Patent laws	MF	100%	15-May-20	22-May-20
Task 3.4 Team Roles	TB	100%	17-Apr-20	29-May-20
Task 3.41 Belbin	TB	100%	20-Apr-20	02-May-20
Task 3.42 Mintzberg	TB	100%	03-May-20	15-May-20
Task 3.43 Maslow's Theory	TB	100%	16-May-20	28-May-20
Task 3.5 Materials	JG	100%	17-Apr-20	29-May-20
Task 3.51 Metals	JG	100%	17-Apr-20	01-May-20
Task 3.52 Polymers	JG	100%	01-May-20	15-May-20
Task 3.53 Sustainable materials	JG	100%	15-May-20	22-May-20
Task 3.54 Material Cost	JG	100%	22-May-20	29-May-20
Task 3.6 Coordination Tools	LK	100%	17-Apr-20	29-May-20
Task 3.61 Research Gantt Charts	LK	100%	17-Apr-20	30-Apr-20
Task 3.62 Log Books	LK	100%	30-Apr-20	01-May-20
Task 3.63 Procedures	LK	100%	01-May-20	09-May-20
Task 3.64 Critical Path Analysis	LK	100%	09-May-20	22-May-20
Task 3.65 Summary	LK	100%	22-May-20	29-May-20
Task 3.7 Compliance/ Regulations	AS	100%	01-May-20	29-May-20
Task 3.71 What are Regulations	AS	100%	01-May-20	08-May-20
Task 3.72 Manufacturing Regulations	AS	100%	01-May-20	15-May-20
Task 3.74 Waste Materials Regulations	AS	100%	15-May-20	22-May-20
Task 3.75 Intellectual Property Regulations	AS	100%	22-May-20	29-May-20
Task 3.8 Decision Criteria	AS	100%	17-Apr-20	01-May-20
Task 3.81 What are Decision Criteria	AS	100%	17-Apr-20	24-Apr-20
Task 3.82 Belbin's Role Matrix	AS	100%	17-Apr-20	24-Apr-20
Task 3.83 Weighted Decision Matrix	AS	100%	24-Apr-20	01-May-20
Task 3.84 QFD Table	AS	100%	24-Apr-20	01-May-20
Phase 4 Presentation and Project Package				
Task 4.1 Project Package	ALL	100%	29-May-20	12-Jun-20
Task 4.21 Create Package Template	LK	100%	29-May-20	29-May-20
Task 4.22 Compile individual Sections	ALL	100%	29-May-20	05-Jun-20
Task 4.23 Write out group evaluation	ALL	100%	05-Jun-20	12-Jun-20
Task 4.25 Complete Project Package	ALL	100%	12-Jun-20	12-Jun-20
Task 4.2 Powerpoint Presentation	ALL	100%	12-Jun-20	26-Jun-20
Task 4.11 Create Presentation Template	LK	100%	12-Jun-20	12-Jun-20
Task 4.12 Complete individual slides	ALL	100%	12-Jun-20	19-Jun-20
Task 4.13 Compile and Practise Presentation	ALL	100%	19-Jun-20	26-Jun-20
Task 4.14 Present Presentation	ALL	100%	26-Jun-20	26-Jun-20

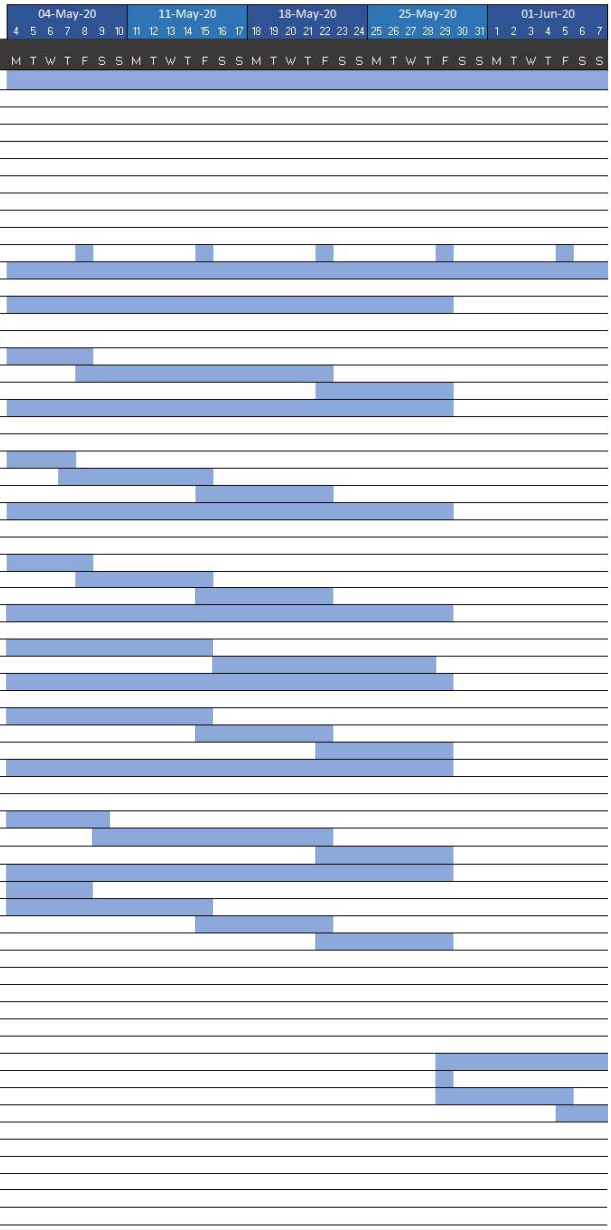

(Weeks 11 – 13)

Project Start:	Friday, 3-Apr-2020
Display Week:	11

TASK	ASSIGNED TO	PROGRESS	START	END
Group Project	ALL	100%	03-Apr-20	26-Jun-20
Phase 1 Selection				
Task 1.1 Group Kick off Meeting	ALL	100%	03-Apr-20	03-Apr-20
Task 1.2 Idea Research	ALL	100%	03-Apr-20	10-Apr-20
Task 1.3 Initial Ideas	ALL	100%	03-Apr-20	10-Apr-20
Task 1.4 Idea Selection	ALL	100%	10-Apr-20	10-Apr-20
Task 1.5 Role Selection	ALL	100%	10-Apr-20	17-Apr-20
Phase 2 Planning				
Task 2.1 Create Group Meeting Log	LK	100%	03-Apr-20	03-Apr-20
Task 2.2 Create Gantt Chart	LK	100%	23-Apr-20	23-Apr-20
Task 2.3 Group Meetings	ALL	100.00%	03-Apr-20	26-Jun-20
Task 2.4 Complete Gantt Chart	LK	100.00%	03-Apr-20	26-Jun-20
Phase 3 Research and Design				
Task 3.1 Design	LC	100%	17-Apr-20	29-May-20
Task 3.11 Initial Design Idea	LC	100%	17-Apr-20	24-Apr-20
Task 3.13 QFD	LC	100%	24-Apr-20	01-May-20
Task 3.14 Design for X	LC	100%	01-May-20	08-May-20
Task 3.15 Final Design	LC	100%	08-May-20	22-May-20
Task 3.18 Conclusion	LC	100%	22-May-20	29-May-20
Task 3.2 Manufacturing	RW	100%	17-Apr-20	29-May-20
Task 3.21 Additive Manufacturing	RW	100%	17-Apr-20	01-May-20
Task 3.22 Investment Casting	RW	100%	17-Apr-20	01-May-20
Task 3.23 Machining	RW	100%	01-May-20	07-May-20
Task 3.24 Heat Treatment	RW	100%	07-May-20	15-May-20
Task 3.25 Manufacturing Process Proposal	RW	100%	15-May-20	22-May-20
Task 3.3 Marketing	MF	100%	17-Apr-20	29-May-20
Task 3.31 Target Audiences	MF	100%	14-Apr-20	21-Apr-20
Task 3.32 Existing Products	MF	100%	21-Apr-20	01-May-20
Task 3.33 Packaging	MF	100%	01-May-20	08-May-20
Task 3.34 Typical marketing tools	MF	100%	08-May-20	15-May-20
Task 3.35 Copyright and Patent laws	MF	100%	15-May-20	22-May-20
Task 3.4 Team Roles	TB	100%	17-Apr-20	29-May-20
Task 3.41 Belbin	TB	100%	20-Apr-20	02-May-20
Task 3.42 Mintzberg	TB	100%	03-May-20	15-May-20
Task 3.43 Maslow's Theory	TB	100%	16-May-20	28-May-20
Task 3.5 Materials	JG	100%	17-Apr-20	29-May-20
Task 3.51 Metals	JG	100%	17-Apr-20	01-May-20
Task 3.52 Polymers	JG	100%	01-May-20	15-May-20
Task 3.53 Sustainable materials	JG	100%	15-May-20	22-May-20
Task 3.54 Material Cost	JG	100%	22-May-20	29-May-20
Task 3.6 Coordination Tools	LK	100%	17-Apr-20	29-May-20
Task 3.61 Research Gantt Charts	LK	100%	17-Apr-20	30-Apr-20
Task 3.62 Log Books	LK	100%	30-Apr-20	01-May-20
Task 3.63 Procedures	LK	100%	01-May-20	09-May-20
Task 3.64 Critical Path Analysis	LK	100%	09-May-20	22-May-20
Task 3.65 Summary	LK	100%	22-May-20	29-May-20
Task 3.7 Compliance/ Regulations	AS	100%	01-May-20	29-May-20
Task 3.71 What are Regulations	AS	100%	01-May-20	08-May-20
Task 3.72 Manufacturing Regulations	AS	100%	01-May-20	15-May-20
Task 3.74 Waste Materials Regulations	AS	100%	15-May-20	22-May-20
Task 3.75 Intellectual Property Regulations	AS	100%	22-May-20	29-May-20
Task 3.8 Decision Criteria	AS	100%	17-Apr-20	01-May-20
Task 3.81 What are Decision Criteria	AS	100%	17-Apr-20	24-Apr-20
Task 3.82 Belbin's Role Matrix	AS	100%	17-Apr-20	24-Apr-20
Task 3.83 Weighted Decision Matrix	AS	100%	24-Apr-20	01-May-20
Task 3.84 QFD Table	AS	100%	24-Apr-20	01-May-20
Phase 4 Presentation and Project Package				
Task 4.1 Project Package	ALL	100%	29-May-20	12-Jun-20
Task 4.21 Create Package Template	LK	100%	29-May-20	29-May-20
Task 4.22 Compile individual Sections	ALL	100%	29-May-20	05-Jun-20
Task 4.23 Write out group evaluation	ALL	100%	05-Jun-20	12-Jun-20
Task 4.25 Complete Project Package	ALL	100%	12-Jun-20	12-Jun-20
Task 4.2 Powerpoint Presentation	ALL	100%	12-Jun-20	26-Jun-20
Task 4.11 Create Presentation Template	LK	100%	12-Jun-20	12-Jun-20
Task 4.12 Complete individual slides	ALL	100%	12-Jun-20	19-Jun-20
Task 4.13 Compile and Practise Presentation	ALL	100%	19-Jun-20	26-Jun-20
Task 4.14 Present Presentation	ALL	100%	26-Jun-20	26-Jun-20

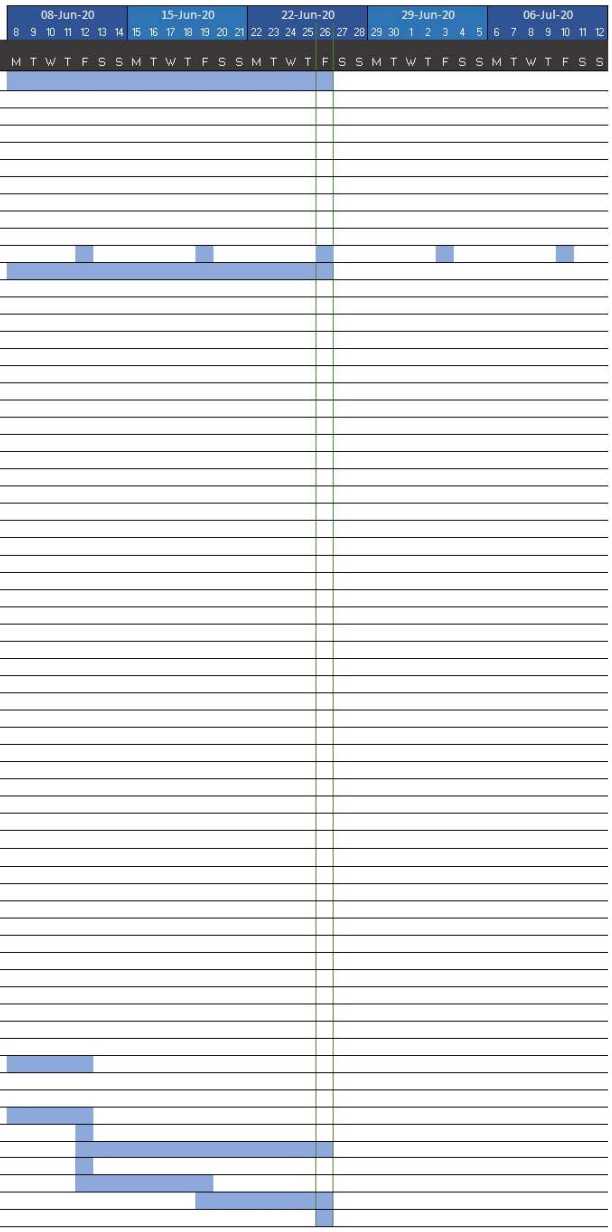

[Appendix 2] Meeting Logbook - LK

Meeting Log

Meeting 1	Date	03/04/2020
Attendees	Adam Sheppard ☒ Damian Thomas ☒ Joseph Garland ☒ Leon Knight ☒ Lewis Christopher ☒ Matthew Ford ☐ Rhodri Williams ☒ Tom Blizzard ☒	

Today we met on Microsoft teams to discuss how would start this project. We went through the scope of the project and determined what would be required to complete it.

Together we decided that we would all put an idea each into a list of potential products. A decision matrix table was created in excel put onto a shared location on Microsoft teams. This was left on here so it could be accessible to everyone and anyone could add to it.

This meeting log was then created to keep track of what was said in each of our upcoming meetings. This is also saved in Microsoft Teams.

Meeting 2	Date	10/04/2020
Attendees	Adam Sheppard ☒ Damian Thomas ☒ Joseph Garland ☐ Leon Knight ☒ Lewis Christopher ☒ Matthew Ford ☐ Rhodri Williams ☒ Tom Blizzard ☒	

As a group, we each inputted our own idea into the matrix table. We then decided on the criteria in which we would mark each idea against. The criteria were then given a weighting value, with a 5 being the most important and 1 being the least important. We each graded each idea a value between 1 and 10 against each criterion. This score is then multiplied by the weighting value. All these scores are added to give each idea a total scoring point value. The idea with the highest score was chosen. In this case, it was the Right-Angle Ratchet Adapter.

Next, we discussed how we would tackle the project. We discussed what the project would require and began creating a list of roles.

In the next meeting we will decide on who is doing what roles and begin our research

Meeting 3	Date	17/04/2020
Attendees	Adam Sheppard ☒ Damian Thomas ☒ Joseph Garland ☐ Leon Knight ☒ Lewis Christopher ☒ Matthew Ford ☒ Rhodri Williams ☒ Tom Blizzard ☒	

In this meeting we decided to write down all the different items that would be needed to complete the project. Once the list was compiled, we combined certain ideas that could be put under a larger section umbrella.

Once we had our project section titles organised, we used our results from the Belbin Roles table to help designate roles. We also asked each other if we had a preference to what we would like to do.

We organised the roles between ourselves. We also discussed how each of us could begin acting on our designated roles. We decided that we can use Microsoft teams as well as the WhatsApp application to keep in contact with one another.

Next meeting, we plan on discussing the initial design ideas of the product. Each of us will show our initial findings for our respective sections.

Meeting 4	**Date**	**24/04/2020**

Attendees	Adam Sheppard ☒ Damian Thomas ☒ Joseph Garland ☒ Leon Knight ☒ Lewis Christopher ☒ Matthew Ford ☒ Rhodri Williams ☒ Tom Blizzard ☒

Today's meeting, we had our first full attendance.

As a group, we went over the Gantt chart. Using the chart, we were able to take the roles that we divided amongst each other and set tasks based on the roles that would need to be completed. We then decided to set a deadline for our research period, taking into consideration for the project deadline and the tasks that would need to be completed in that time frame.

Next, we went over the initial sketch and design of the product. The basic operation and look of the product were discussed, leading us to note that a product specification will be needed when creating future designs.

The current progress that we have made on the project so far was inputted into the Gantt chart.

Next meeting, we plan on discussing how we have gotten on with our initial research. A product specification will also be written up.

Meeting 5	**Date**	**01/05/2020**

Attendees	Adam Sheppard ☒ Damian Thomas ☒ Joseph Garland ☒ Leon Knight ☒ Lewis Christopher ☒ Matthew Ford ☒ Rhodri Williams ☒ Tom Blizzard ☒

In this meeting we gathered to discuss any issues we were having with our individual roles.

Individual folders for each member's documents was created on the file share. This was created to help organise the files and make it easy for each member to locate their work. The framework for the final project document has been created with slots for each member's work.

The product specification still needs to be completed.
Members are starting to progress with their research.

Next Meeting, we will review the work that has been completed and go over any difficulties any members are having with their work.

Meeting 6	Date	08/05/2020
Attendees	Adam Sheppard ☒ Damian Thomas ☒ Joseph Garland ☒ Leon Knight ☒ Lewis Christopher ☒ Matthew Ford ☒ Rhodri Williams ☒ Tom Blizzard ☒	

In this meeting we went over any work that had been done up until this point.

Some of the team could not work out how to use the teams upload and download tools. We used this meeting to go over how to do it as a team. We made sure to clarify how to do it and had each person write down a personal step by step guide for themselves.

The remainder of the meeting was spent reviewing the initial Solidworks model of the right-angle ratchet adapter. We were happy with this design and it gave the members working on the manufacturing and materials roles a clearer idea of what materials and methods would be suitable to produce it.

Next meeting, we will continue to review the progress of everyone's work.

Meeting 7	Date	15/05/2020
Attendees	Adam Sheppard ☒ Damian Thomas ☒ Joseph Garland ☒ Leon Knight ☒ Lewis Christopher ☒ Matthew Ford ☒ Rhodri Williams ☒ Tom Blizzard ☒	

In today's meeting, we had a look at the final model design of the product. We had the manufacturing, materials and design members of the team present the product design and explain how each of them contributed to it.
After a detailed explanation of their findings, the rest of us were able to share our thoughts and finalise the product decisions.

We also had a catch up with everyone else's progress. Some claimed to reach mental roadblocks when it came to research. We used this time to propose different potential research topics. We then whittled down these ideas to a select few. This idea generating activity helped to give everyone a broader idea of what could be used in the project.

Next meeting, we will have another review of everyone's progress. We acknowledge that we are arriving to the final stages of this phase.

Meeting 8	Date	22/05/2020
Attendees	Adam Sheppard ☒ Damian Thomas ☒ Joseph Garland ☒ Leon Knight ☒ Lewis Christopher ☒ Matthew Ford ☒ Rhodri Williams ☒ Tom Blizzard ☒	

In this meeting, we began by asking if anyone was having any serious problems with their research. Luckily, everyone seemed to be progressing with their work at a steady pace.

We then went over everyone's current offerings for the project. Most members looked to have made a lot of progress, with a couple nearly finishing entirely. However, some still seemed to have a great deal of a workload left.
We decided that those who were close to finishing could spare some time to give assistance to those who needed it. This would relieve some of the pressure on some members. We agreed that having a second set of eyes could provide numerous benefits for the quality of work.

Next meeting, we will be looking to finalise all the research and will be looking to begin creating the overarching project file.

Meeting 9	**Date**	**29/05/2020**
Attendees	Adam Sheppard ☒ Damian Thomas ☒ Joseph Garland ☒ Leon Knight ☒ Lewis Christopher ☒ Matthew Ford ☒ Rhodri Williams ☒ Tom Blizzard ☒	

Today we went over everyone's work that they had completed. We went through a checklist of tasks we needed from each individual to ensure nothing had been missed or was still pending completion.

A couple of files needed modifications doing to them. The files will be updated before the next meeting.

A person was selected to create the package template. The template will have sections already divided within the file. These sections will have their own title pages with the title of the section as well as the name of the individual in charge of it.

The template will be completed ready for the next meeting. It will be uploaded onto Microsoft Teams to allow all members instant access to the file.

Meeting 10	**Date**	**05/06/2020**
Attendees	Adam Sheppard ☒ Damian Thomas ☒ Joseph Garland ☒ Leon Knight ☒ Lewis Christopher ☒ Matthew Ford ☒ Rhodri Williams ☒ Tom Blizzard ☒	

In today's meeting, we made sure that everyone was able to upload their part of the project onto teams. We used this time to help anyone who was having any technical difficulties.

Once everyone was confirmed to be able to make the modifications to the project package template, we began to compile them as a group. We made sure that each part looked uniform to the rest of the project.

Over the next week, our aim as a team is to have all the work put into the one file. It needs to be clearly organised and divided into segments that will represent each person's roles.

In the next meeting, we should be putting the final touches on the project.

Meeting 11	**Date**	**12/06/2020**
Attendees	Adam Sheppard ☒ Damian Thomas ☒ Joseph Garland ☒ Leon Knight ☒	

	Lewis Christopher ☒ Matthew Ford ☒ Rhodri Williams ☒ Tom Blizzard ☒

In today's meeting, we went over our final checks of the project package. We went through a checklist to ensure everything was present and we were happy it all looked how we wanted it.

Once we were happy the package was complete, we discussed our plan for the PowerPoint Presentation. We decided to do the order of the presentation in the same order that we did on the project package. We came to a decision that each person can have a maximum of 3 slides to make sure that we did not go over the time allowance.

A person was selected to create the PowerPoint presentation template. This will be set up so that individuals can place their information into predesignated slide locations. Once the template was completed, it was uploaded onto Microsoft Teams to allow all members instant access to the file.

By the next meeting will should have all the slides prepared.

Meeting 12	**Date**	**19/06/2020**

Attendees	Adam Sheppard ☒ Damian Thomas ☒ Joseph Garland ☒ Leon Knight ☒ Lewis Christopher ☒ Matthew Ford ☒ Rhodri Williams ☒ Tom Blizzard ☒

In today's meeting, we had everyone show the slides that they had prepared. We were able to critique them to make sure they were at the best standard they could be. We made sure that they were all inputted into the presentation template and began writing presentation notes.

We had a run through of the presentation to gain an appreciation for what it would be like to perform it.

We would all be practising our parts for the presentation until next week.

Meeting 13	**Date**	**26/06/2020**

Attendees	Adam Sheppard ☒ Damian Thomas ☒ Joseph Garland ☒ Leon Knight ☒ Lewis Christopher ☒ Matthew Ford ☒ Rhodri Williams ☒ Tom Blizzard ☒

Today we had a final run through the presentation before we were reading to present the presentation.

This is the final meeting log of the project.

[Appendix 3] Critical Path Analysis Chart - LK

Task	Duration	Preceding Activity
1.1	1	
1.2	7	1.1
1.3	7	1.1
1.4	1	1.2,1.3
1.5	7	1.1
2.1	1	1.1
2.2	1	1.5, 2.1
3.1	42	2.2
3.2	42	2.2
3.3	42	2.2
3.4	42	2.2
3.5	42	2.2
3.6	42	2.2
3.7	42	2.2
3.8	42	2.2
4.1	7	3.1-3.8
4.2	7	4.1

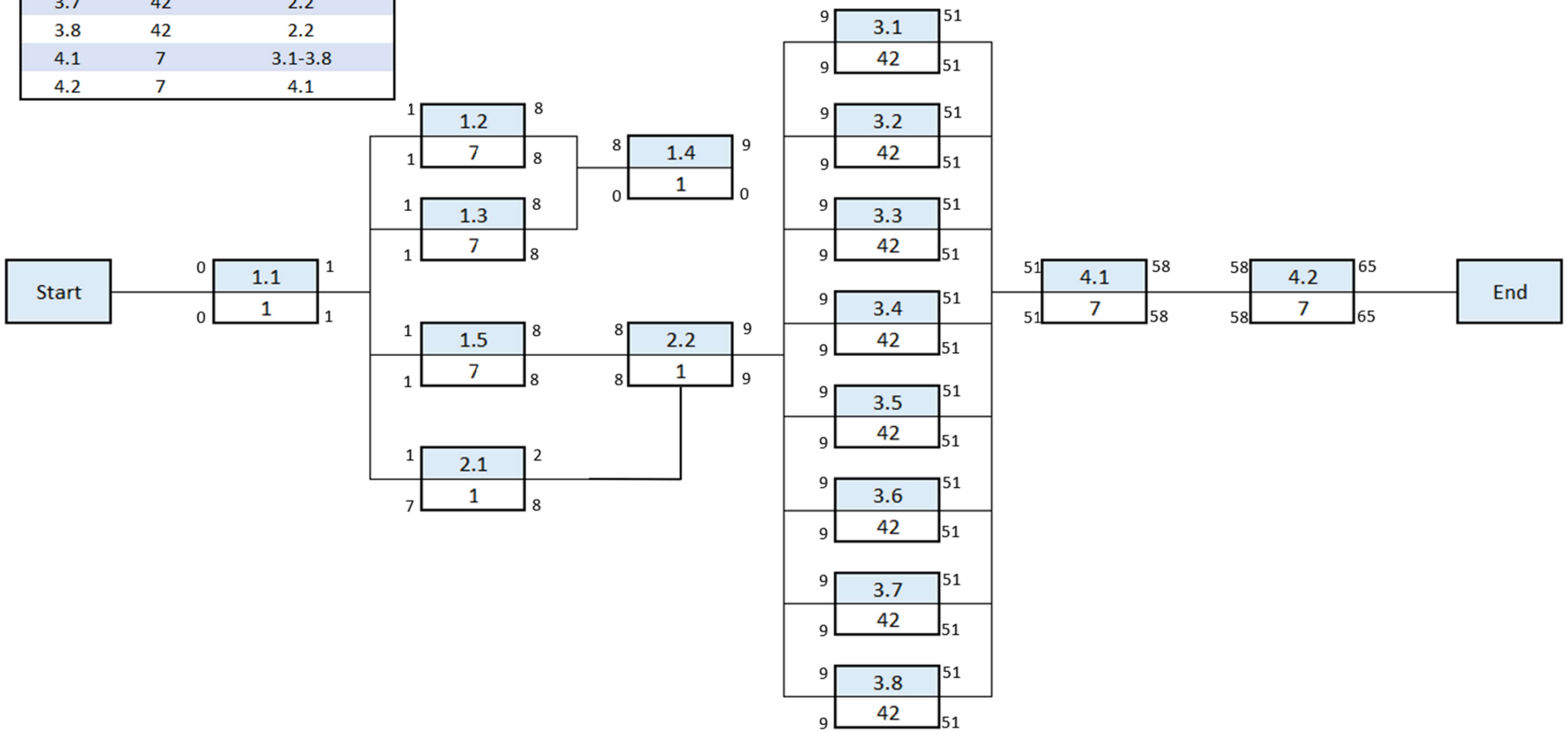

Total duration of project: 65 Days

Critical path: (1.1) – (1.2, 1.3, 1.5) – (2.2) – (3.1, 3.2, 3.3, 3.4, 3.5, 3.6, 3.7, 3.8) – (4.1) – (4.2)

[Appendix 4] Project Procedure - LK

Project Procedure	
Phase 1 Selection	**Duration: 14 Days**
Task 1.1 Group Kick off Meeting	This is the meeting to establish the team and discuss the goals of the project. This is where decisions on what tasks are required and to set initial goals. A decision on what roles will be required to complete the tasks.
Task 1.2 Idea Research	The team is to conduct research into existing products and to see if they can find a gap in the market for either a new product or an evolution of an existing product.
Task 1.3 Initial Ideas	This is where the team comes up with ideas on what product the project will be based on. Each member will bring forward an idea to provide a variety of potential choices.
Task 1.4 Idea Selection	The team is to use decision making methods to select a product for the project.
Task 1.5 Role Selection	The roles are to be shared amongst the team members based off role selection methods and preferences.
Phase 2 Planning	**Duration: 7 Days**
Task 2.1 Create Group Meeting Log	The designated member is to create the group meeting log and to designate times in which regular meetings will occur.
Task 2.2 Create Gantt Chart	A Gantt chart is to be created to help plan and monitor the project. The procedure is to be created at this same time.
Phase 3 Research and Design	**Duration: 42 days**
Task 3.1 Design	Design specifications are to be produced to ensure the product is designed to meet the needs or the consumer. The design of the product is to go through multiple phases including: • Initial idea Sketches • Final Idea Sketch • Initial 3D Model • Final 3D Model The final product will then be compared to the original design specifications.

Task 3.2 Manufacturing	Different potential manufacturing process will be considered. Such processes can include: • 3D printing • CNC vs Manual Methods • Casting • Other Additive Manufacturing Different potential design software should be researched for any computer based manufacturing.
Task 3.3 Marketing	Marketing research should be done to see what existing competitors are currently doing. The target audience should be looked at when considering marketing avenues. Other research can include: • Packaging styles: Aesthetics, sustainable packing, packaging materials etc. • Typical marketing tools used by other companies to grab customer attention • Existing Copyright and Patent laws should be investigated to ensure compliance is met with the design.
Task 3.4 Team Roles	Research into team role theories to help make sure that the team has been organised in the most efficient and effective method. Such theories may include: • Belbin • Mintzberg • Maslow's Theory
Task 3.5 Materials	Different types of materials should be researched to ensure that the materials used are the most apt and cost effective for the product. The materials researcher should work alongside the manufacturing researcher to ensure the findings correspond. Possible research topics include: • Metals • Plastics/Polymers • Sustainable materials • Material Cost vs Labour Cost
Task 3.6 Coordination Tools	This section is to research and decide what coordination tools could and should be used in the project. These options should be investigated and implemented into the project to improve the efficiency of the workflow. Possible coordination tools include: • Gantt Charts • Log Books • Procedures • Timing Plans • Task 3.65 Critical Path Analysis

Task 3.7 Compliance/ Regulations	Existing regulations from different sectors should be researched to ensure the final product is designed and marketed to a lawful standard. International laws should be considered in case the product was to ever be sold outside the British territory. Potential Research topics: • British Standards • European Standards • Health and Safety
Task 3.8 Decision Criteria	Different decision-making methods should be explored to ensure the most optimal method is selected. These decision-making practices can then be implemented in the project. Such methods could include: • Matrix Analysis Charts • Weighted Decision Matrix • Brinstorming/Mind Maps • QFD • Design for Assembly
Phase 4 Presentation and Project Package	**Duration: 14 Days**
Task 4.1 Project Package	The project package will need to be assembled once all previous tasks have been completed. A project template file will need to be created so members can easily assimilate their findings. An evaluation should be created for both the product itself and the project.
Task 4.2 PowerPoint Presentation	A presentation containing slides from each member should be developed. This presentation will go over the main points of the project. Each member can talk about their own role in the project.

Appendix 5 - LC

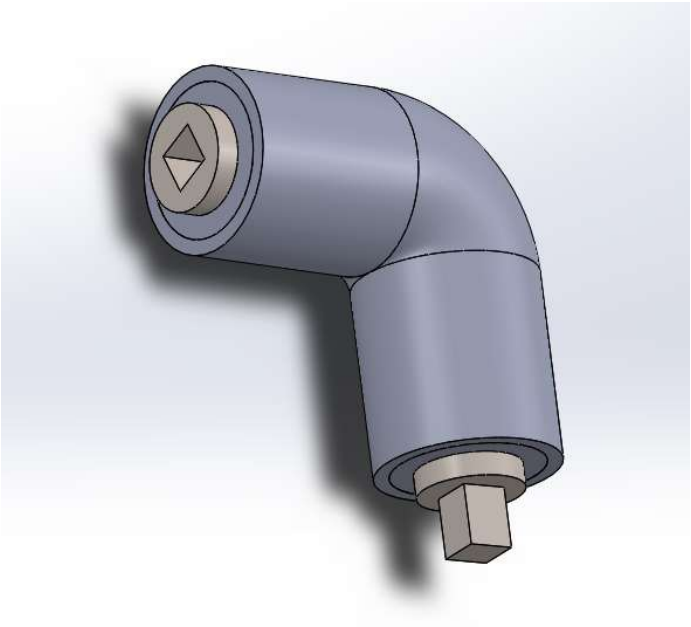

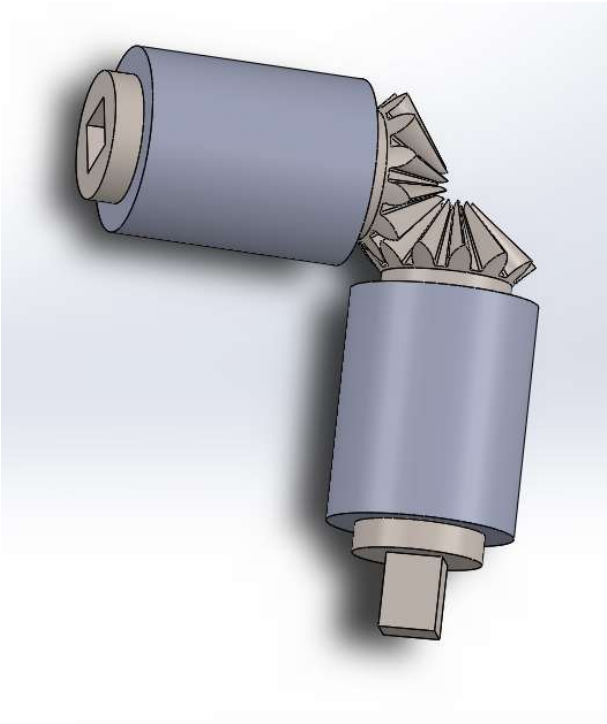

Appendix 6 - LC

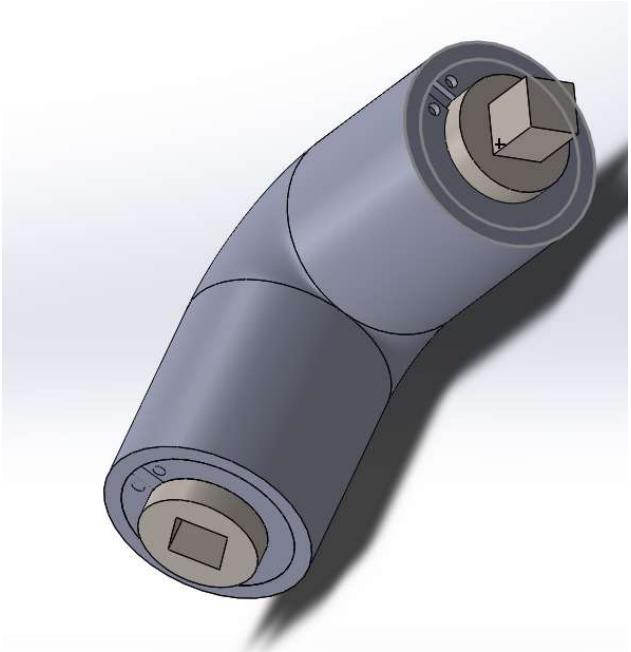

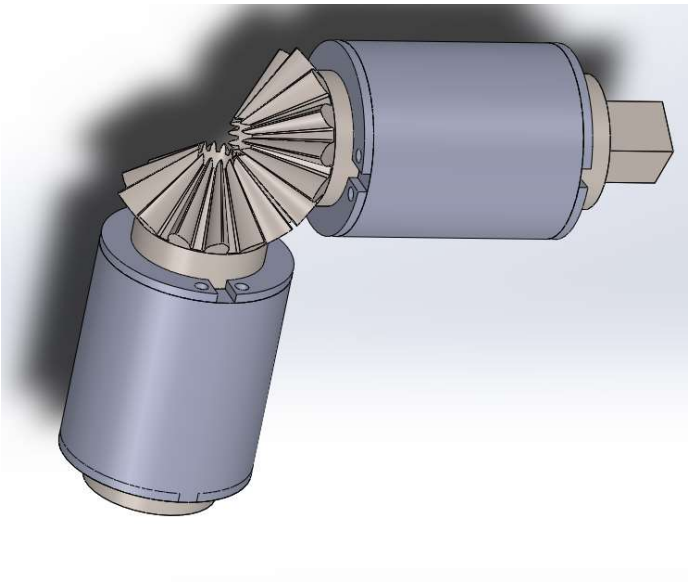

Appendix 7 - LC

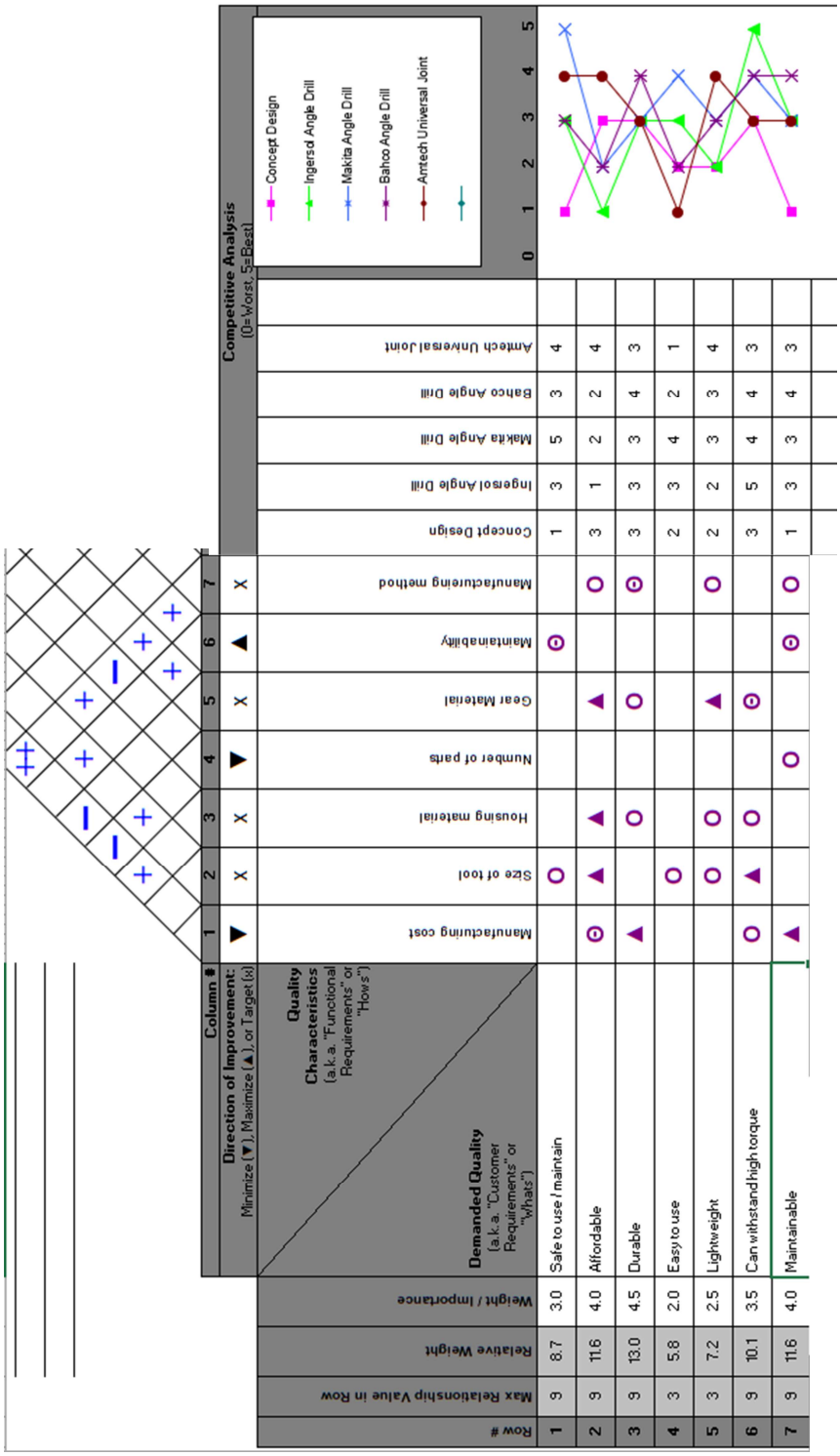

Row #	Max Relationship Value in Row	Relative Weight	Weight / Importance	Demanded Quality (a.k.a. "Customer Requirements" or "whats")	Manufacturing cost	Size of tool	Housing material	Number of parts	Gear Material	Maintainability	Manufacturing method	Concept Design	Ingersol Angle Drill	Makita Angle Drill	Bahco Angle Drill	Amtech Universal Joint
				Direction of Improvement: Minimize (▼), Maximize (▲), or Target (x)	▲	x	x	▲	x	▲	x					
				Column #	1	2	3	4	5	6	7					
1	9	8.7	3.0	Safe to use / maintain		○				⊙		1	3	5	3	4
2	9	11.6	4.0	Affordable	⊙	▲	▲		▲		○	3	1	2	2	4
3	9	13.0	4.5	Durable	▲		○		○		⊙	3	3	3	4	3
4	3	5.8	2.0	Easy to use		○						2	3	4	2	1
5	3	7.2	2.5	Lightweight		○	○		▲		○	2	2	3	3	4
6	9	10.1	3.5	Can withstand high torque	○	▲	○		⊙			3	5	4	4	3
7	9	11.6	4.0	Maintainable	▲			○		⊙	○	1	3	3	4	3

References

Blazek, L., 2017. *Turned On Black And Grey Laptop Computer Photo*. [image] Available at: https://unsplash.com/photos/mcSDtbWXUZU [Accessed 7 May 2020].	LK
Boscaro, G., 2017. *Black Wooden D And C Bookshelf Photo*. [image] Available at: https://unsplash.com/photos/OPzWvgL-upY [Accessed 7 May 2020].	LK
Campaign_creators, 2018. *Man Standing In Front Of People Sitting Beside Table With Laptop*. [image] Available at: https://unsplash.com/photos/gMsnXqILjp4 [Accessed 7 May 2020].	LK
Editors, A., 2020. *Five Reasons Why Meeting Minutes Are Important | Allbusiness.Com*. [online] AllBusiness.com. Available at: https://www.allbusiness.com/five-reasons-why-meeting-minutes-are-important-4113272-1.html [Accessed 20 May 2020]	LK
Gantt.com. 2020. *What Is A Gantt Chart? Gantt Chart Software, Information And History*. [online] Available at: https://www.gantt.com/ [Accessed 18 May 2020]	LK
Graham, S., 2016. *Brainstorming Over Paper*. [image] Available at: https://unsplash.com/photos/5fNmWej4tAA [Accessed 7 May 2020].	LK
Grone, P., 2018. Group Of People Huddling. [image] Available at: https://unsplash.com/photos/lbLgFFlADrY [Accessed 7 May 2020].	LK
Kenton, W., 2020. *Understanding Critical Path Analysis*. [online] Investopedia. Available at:https://www.investopedia.com/terms/c/critical-path-analysis.asp#:~:text=Critical%20path%20analysis%20(CPA)%20is,each%20activity %20on%20any%20others. [Accessed 21 May 2020]	LK
Meyer, M., 2019. Printing Papers On Brown Surface Photo. [image] Available at: https://unsplash.com/photos/HN1roKF-DS4 [Accessed 7 May 2020].	LK
Ops.fhwa.dot.gov. 2017. *FHWA Office Of Operations - Coordinating Military Deployments On Roads And Highways - Chapter 4. Recommended Coordination Procedures*. [online] Available at: https://ops.fhwa.dot.gov/publications/fhwahop05029/chapter_4.htm [Accessed 22 May 2020]	LK
Project-Management.com. 2018. *Advantages And Disadvantages Of Gantt Charts*. [online] Available at: https://project-management.com/advantages-and-disadvantages-of-gantt-charts/ [Accessed 18 May 2020]	LK
2018. Two People Drawing On Whiteboard Photo. [image] Available at: https://unsplash.com/photos/26MJGnCM0Wc [Accessed 7 May 2020].	LK
Wales.nhs.uk. 2020. *Critical Path Method*. [online] Available at: http://www.wales.nhs.uk/technologymls/english/resources/pdf/tools/problem/Critical%20Path%20Method.pdf [Accessed 21 May 2020].	LK
Wang, X., 2019. *Man Cutting Iron Photo*. [image] Available at: https://unsplash.com/photos/vevOKBpCI5E [Accessed 7 May 2020].	LK
Yo, M., 2020. Brown And Black Metal Pipe Photo. [image] Available at: https://unsplash.com/photos/VAhJP5c-XdI [Accessed 7 May 2020].	LK

Brand, S., 2020. *5 Major Benefits Of Additive Manufacturing You Should Consider*. [online] Cmtc.com. Available at: <https://www.cmtc.com/blog/benefits-of-additive-manufacturing> [Accessed 8 June 2020].	**RW**
Staff, A., 2015. *Pros And Cons Of Additive Manufacturing	Composites Manufacturing Magazine*. [online] Composites Manufacturing Magazine. Available at: <http://compositesmanufacturingmagazine.com/2014/10/pros-cons-additive-manufacturing/2/> [Accessed 12 June 2020].	**RW**
Kopeliovich, D., 2012. *Investment Casting [Substech]*. [online] Substech.com. Available at: <https://www.substech.com/dokuwiki/doku.php?id=investment_casting> [Accessed 13 June 2020].	**RW**
Cirex, 2020. *Investment Casting Process - CIREX*. [online] CIREX. Available at: <https://cirexfoundry.com/investment-casting/process/> [Accessed 13 June 2020].	**RW**
Thomasnet.com. 2020. *What Is Machining? A Guide To The Different Types Of Machining Operations*. [online] Available at: <https://www.thomasnet.com/articles/custom-manufacturing-fabricating/types-machining/> [Accessed 15 June 2020].	**RW**
Brighthubengineering.com. 2009. *Heat Treatment Of Steels & Metals*. [online] Available at: <https://www.brighthubengineering.com/manufacturing-technology/30476-what-is-heat-treatment/> [Accessed 23 June 2020].	**RW**
Huckstepp, A., 2020. *Economics Of Metal Additive Manufacturing*. [online] Digital Alloys. Available at: <https://www.digitalalloys.com/blog/economics-metal-additive-manufacturing/> [Accessed 18 June 2020].	**RW**
Gibson, I., Rosen, D. and Stucker, B., 2010. *Additive Manufacturing Technologies*. 2nd ed. New Yourk: Springer, pp.44-49.	**RW**
E., A., Kamal, A. and Ogunjirin, O., 2020. *Effects Of Heat Treatment On The Properties Of Mild Steel Using Different Quenchants*. [online] Article.sapub.org. Available at: <http://article.sapub.org/10.5923.j.fs.20120206.04.html> [Accessed 23 June 2020].	**RW**
Shekhar, S. and Jaiswal, A., 2008. *Heat Treatment Of S.G Cast Iron*. [online] Rourkela: Department of Metallurgy and Materials Engineering National Institute of Technology, pp.27-32. Available at: <http://ethesis.nitrkl.ac.in/4338/1/r.pdf> [Accessed 15 June 2020].	**RW**
Morgan, R., 2020. *Typical Machining Spindle Speeds & Feeds Rates*.	**RW**
Van Tuong, N., 2018. MANUFACTURING METHOD OF SPIRAL BEVEL GEARS BASED ON CAD/CAM AND 3-AXIS MACHINING CENTER. *MM Science Journal*, [online] 2018(02), pp.2401-2405. Available at: <https://www.researchgate.net/publication/325610675_Manufacturing_method_of_spiral_bevel_gears_based_on_CADCAM_and_3-axis_machining_center> [Accessed 20 June 2018].	**RW**

92(2016), A., 2020. *ASTM A686 - 92(2016) Standard Specification For Tool Steel, Carbon*. [online] Astm.org. Available at: <https://www.astm.org/Standards/A686.htm> [Accessed 25 June 2020].	**JG**
Asm.matweb.com. 2020. *ASM Material Data Sheet*. [online] Available at: <http://asm.matweb.com/search/SpecificMaterial.asp?bassnum=MA6061T6> [Accessed 25 June 2020].	**JG**
AZoM.com. 2020. *Properties: An Introduction To Copper*. [online] Available at: <https://www.azom.com/properties.aspx?ArticleID=597> [Accessed 25 June 2020].	**JG**
Bpf.co.uk. 2020. *BPF - Pbt/Polycarbonate*. [online] Available at: <https://www.bpf.co.uk/directory/pbtpolycarbonate.aspx> [Accessed 25 June 2020].	**JG**
Matmatch.com. 2020. *Carbon Steel: Properties, Examples And Applications - Matmatch*. [online] Available at: <https://matmatch.com/learn/material/carbon-steel> [Accessed 25 June 2020].	**JG**
Hotmelt.com. 2020. *Epoxy Adhesives - Metal Bonding & Potting - Adhesive Systems*. [online] Available at: <https://www.hotmelt.com/collections/epoxy> [Accessed 25 June 2020].	**JG**
Threebond. 2020. *Epoxy Resin Manufacturer | Industrial Epoxy Resins | Threebond*. [online] Available at: <https://threebond.com/products/adhesives/epoxy-resins> [Accessed 25 June 2020].	**JG**
Ezlok.com. 2020. *Brass Mechanical Properties | E-Z LOK*. [online] Available at: <https://www.ezlok.com/brass-properties> [Accessed 25 June 2020].	**JG**
Omnexus.specialchem.com. 2020. *PET Plastic (Polyethylene Terephthalate): Uses, Properties & Structure*. [online] Available at: <https://omnexus.specialchem.com/selection-guide/polyethylene-terephthalate-pet-plastic> [Accessed 25 June 2020].	**JG**
Omnexus.specialchem.com. 2020. *PMMA Plastics Poly(Methyl Methacrylate): Properties, Uses & Application*. [online] Available at: <https://omnexus.specialchem.com/selection-guide/polymethyl-methacrylate-pmma-acrylic-plastic#:~:text=PMMA%20or%20poly%20(methyl%202,produced%20from%20monomer%20methyl%20methacrylate.&text=It%20is%20a%20clear%2C%20colorless,compression%20molding%2C%20and%20extrusion).> [Accessed 25 June 2020].	**JG**
Omnexus.specialchem.com. 2020. *Polyamide/Nylon (PA Plastic): Uses & Properties [Updated 2019]*. [online] Available at: <https://omnexus.specialchem.com/selection-guide/polyamide-pa-nylon> [Accessed 25 June 2020].	**JG**
Theplasticpeople.co.uk. 2020. *Polycarbonate Sheet - Cut To Size Polycarbonate | The Plastic People*. [online] Available at: <https://www.theplasticpeople.co.uk/products/plastic-sheets/polycarbonate/> [Accessed 25 June 2020].	**JG**
Encyclopedia Britannica. 2020. *Polyethylene Terephthalate | Structure, Properties, & Uses*. [online] Available at: <https://www.britannica.com/science/polyethylene-terephthalate> [Accessed 25 June 2020].	**JG**

Google Books. 2020. *Principles Of Polymer Systems*. [online] Available at: <https://books.google.co.uk/books?id=isJTAAAAMAAJ&q=inauthor:%22Ferdinand+Rodriguez%22&dq=inauthor:%22Ferdinand+Rodriguez%22&hl=en&sa=X&ved=2ahUKEwiK8Z6Imp3qAhXWEcAKHRAYAqoQ6wEwAHoECAIQAQ> [Accessed 25 June 2020].	**JG**
Matweb.com. 2020. *Overview Of Materials For Cast Iron*. [online] Available at: <http://www.matweb.com/search/datasheettext.aspx?matguid=6291a24572754cae94ff365ed99b96f9> [Accessed 25 June 2020].	**JG**
Metal Supermarkets UK - Stainless Steel, Aluminium, Bright, Black, Engineering, Bronze, Copper, Brass, Tool, Galvanized. 2020. *Aluminium | Metal Supermarkets UK - Stainless Steel, Aluminium, Bright, Black, Engineering, Bronze, Copper, Brass, Tool, Galvanized*. [online] Available at: <https://www.metalsupermarkets.co.uk/metals/aluminium/> [Accessed 25 June 2020].	**JG**
Razumov, I., Gornostyrev, Y. and Katsnelson, M., 2020. *STRUCTURE, PHASE TRANSFORMATIONS AND DIFFUSION*. [ebook] p.2. Available at: <https://arxiv.org/ftp/arxiv/papers/1707/1707.04287.pdf> [Accessed 25 June 2020].	**JG**
Reliance Foundry Co. Ltd. 2020. *Introduction To Cast Iron: History, Properties, And Uses*. [online] Available at: <https://www.reliance-foundry.com/blog/cast-iron#gref> [Accessed 25 June 2020].	**JG**
Sciencing. 2020. *Properties & Uses Of Steel*. [online] Available at: <https://sciencing.com/properties-uses-steel-7271721.html> [Accessed 25 June 2020].	**JG**
Scrapmetalpricesuk.co.uk. 2020. *Scrap Metal Prices UK*. [online] Available at: <http://www.scrapmetalpricesuk.co.uk/> [Accessed 25 June 2020].	**JG**
Spacey, J., 2020. *11 Characteristics Of Sustainable Materials*. [online] Simplicable. Available at: <https://simplicable.com/new/sustainable-materials#:~:text=A%20material%20that%20can%20be%20reused%20or%20recycled.&text=Likewise%2C%20any%20material%20that%20originates,recycled%20is%20typically%20considered%20sustainable.> [Accessed 25 June 2020].	**JG**
Encyclopedia Britannica. 2020. *Stainless Steel | Types & Facts*. [online] Available at: <https://www.britannica.com/technology/stainless-steel> [Accessed 25 June 2020].	**JG**
ThoughtCo. 2020. *What Is Brass? Composition And Properties*. [online] Available at: <https://www.thoughtco.com/brass-composition-and-properties-603729#:~:text=Brass%20is%20a%20soft%20metal,including%20galvanic%20corrosion%20from%20saltwater.> [Accessed 25 June 2020].	**JG**
Zahner, A., 2020. *Materials — Zahner*. [online] Zahner. Available at: <https://www.azahner.com/materials> [Accessed 25 June 2020].	**JG**
Amtech, n.d. *3pc Universal Joint Set.* [Online] Available at: https://amtechdiy.com/product/3pc-universal-joint-set/	**LC**
Anon., 2019. *What is House of Quality / QFD Example.* [Online] Available at: https://www.whatissixsigma.net/house-of-quality-qfd/	**LC**
Anon., n.d. *QFD Quality Function Deployment.* [Online] Available at: https://asq.org/quality-resources/qfd-quality-function-deployment	**LC**

Crease, A., 2018. *The Importance of Design for Manufacturing.* [Online] Available at: https://markforged.com/blog/importance-of-dfm/	**LC**
E-BI, 2018. 3 reasons why design for manufacturing is important for your product. *Puget Sound Business Journal.*	**LC**
Furterer, G. L. D. a. S. L., 2020. *The ASQ Certified Quality Improvement Associate Handbook.* fourth ed. s.l.:s.n.	**LC**
RNA Automation, 2019. *Poka Yoke in Manufacuring.* [Online] Available at: https://www.rnaautomation.com/blog/poka-yoke-in-manufacturing/	**LC**
Rudeck, E., 2017. *Concept Design: A Short Introduction,* s.l.: s.n.	**LC**
Sunny, S., 2019. *Design for X (DFX).* [Online] Available at: https://sixsigmastudyguide.com/design-for-x-dfx/	**LC**

tom Content Marketing Ltd. (2020). *Copyright*. Retrieved from Lawdonut.co.uk: https://www.lawdonut.co.uk/business/intellectual-property/copyright/copyright-overview (Accessed: 25 May 2020)	**AS**
Cook, S. (2019). *What is commercial waste?* Retrieved from startups: https://startups.co.uk/what-is-commercial-waste/ (Accessed: 21 May 2020)	**AS**
Department For Environment Food & Rural Affairs. (2018, November). *Waste Duty of Care Code of Practice* . Retrieved from assets.publishing.service.gov.uk: https://assets.publishing.service.gov.uk/government/uploads/system/uploads/ attachment_data/file/759083/waste-code-practice-2018.pdf (Accessed: 21 May 2020)	**AS**
European Commission. (2020). *Internal Market, Industry, Entrepreneurship and SMEs.* Retrieved from Europa.eu: https://ec.europa.eu/growth/single-market/goods/building-blocks/conformity-assessment_en (Accessed: 11 May 2020)	**AS**
Health and Safety Executive. (2020a, April). *Supplying new machinery A short guide to the law and your responsibilities when supplying machinery for use at work.* Retrieved from hse.gov.uk: https://www.hse.gov.uk/pubns/indg270.pdf (Accessed: 11 May 2020)	**AS**
Health and Safety Executive. (2020b). *UK law on the design and supply of products.* Retrieved from hse.gov.uk: https://www.hse.gov.uk/work-equipment-machinery/uk-law-design-supply-products.htm#sec6hswa74 (Accessed: 11 May 2020)	**AS**
HM Government. (2020a). *Machinery manufacturers: legal responsibilities*. Retrieved from Gov.uk: https://www.gov.uk/guidance/machinery-manufacturers-and-their-responsibilities (Accessed: 11 May 2020)	**AS**
HM Government. (2020b). *Intellectual property and your work*. Retrieved from Gov.uk: https://www.gov.uk/intellectual-property-an-overview (Accessed: 25 May 2020)	**AS**
Pinsent Masons. (2012, January). *Patents: the basics*. Retrieved from pinsentmasons.com: https://www.pinsentmasons.com/out-law/guides/patents-the-basics (Accessed 25 May 2020)	**AS**
Tsunami Solutions Ltd. (2020). *Legislation vs. regulation: What's the difference?* Retrieved from SafetyLine: https://safetylineloneworker.com/blog/legislation-vs-regulation-whats-difference/ (Accessed: 2 May 2020)	**AS**

American Society for Quality. (2020). *What is Quality Function Deployment (QFD)?* Retrieved from asq.org: https://asq.org/quality-resources/qfd-quality-function-deployment (Accessed: 27 April 2020)	**AS**
Belbin. (2020). *The Nine Belbin Team Roles*. Retrieved from Belbin.com: https://www.belbin.com/about/belbin-team-roles/ (Accessed: 27 April 2020)	**AS**
Cox, A. (2015, June 23). *Choose the Right Decision Criteria*. Retrieved from netmind.net: https://netmind.net/choose-the-right-decision-criteria/ (Accessed: 27 April 2020)	**AS**
Mar, A. (2018, August 7). *20 examples of decision criteria*. Retrieved from Simplicable: https://simplicable.com/new/decision-criteria (Accessed: 27 April 2020)	**AS**

Anderson, N., 2004. Journal of Occupational and Organizational Psychology. *An evaluation of gender differences on the Belbin Team Role Self-Perception Inventory,* 77(3), pp. 429-437.	**TB**
Caramela, S., 2018. *Business.com.* [Online] Available at: https://www.business.com/articles/management-theory-of-henry-mintzberg-basics [Accessed 2 06 2020].	**TB**
Caudron, S., 1994. Teamwork Takes Work. *Teamwork Takes Work*, pp. 40-48.	**TB**
Fisher, S. G., 2002. Journal of Managerial Psychology. Belbin's team role theory: for non-managers also?, 17(1), pp. 14-20.	**TB**
Hoffman, E., 1988. *A Right to be Human: A Biography of Abraham Maslow*. 1 ed. Los Angeles: Jeremy, P.	**TB**
Lester, D., 2013. Measuring Maslow's Hierachy of Needs. Personality and Individual Differences, 113(1), pp. 1187-1188.	**TB**
MacKechnie, P., 2003. Belbin Team Role Theories. *Management Teams -Why They Succeed or Fail,* 2(1), pp. 1-12.	**TB**
McLeod, S. A., 1987. Maslow's Hierachy of Needs. *Simply Psychology* , 1(1), p. 69.	**TB**
Snyder, N. H., 2017. Academy of Management Proceedings. Managerial Roles: Mintzberg and the Management Process Theorists, 1981(1), pp. 23-27.	**TB**
Tague, N. R., 2005. *The Quality Toolbox*. Milwaukee: ASQ Quality Press.	**TB**
Zartler, J.,2016. *Medium.* [Online] Available at: https://medium.com/taskworld-blog/mintzberg-model-10-different-roles-of-a-successful-manager [Accessed 2 June 2020].	**TB**