Prifysgol Cymru
Y Drindod Dewi Sant
University of Wales
Trinity Saint David

A Study of Automotive Lighting and Parking Aid

Author: Luke Andersen (1603319) | Email: Lukeandersen28@live.co.uk

1) Introduction

The purpose of this project was to identify if a microcontroller could be used to implement the use of automatic headlights and parking aid within an automobile

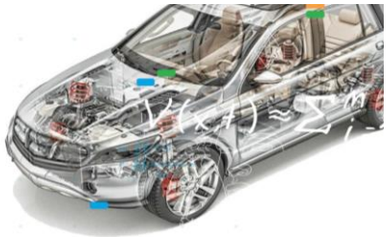

Figure 1: Automobile

2) Aims & Objectives

Design Aims:

- Parking Sensors
- Automatic headlights

Objectives:

- The activation point for the parking aid to operate is when the reverse gear has been initiated
- The Headlights have to be activated once a specific level of darkness has been reached
- The Headlights must be able to activate manually
- The distance an object is from the system must be replicated via a display

3) Research

Existing sensor technology research to find the most suitable technology :

- Ultrasonic Sensors – Parking Aid
- Electromagnetic Sensors – Parking Aid
- Radar Sensors – Parking Aid
- Light Dependant Resistors – Automatic Headlights

Image	
Cost	Pack of 4 - £9.95
Supplier	RS Components

Figure 2: LDR- Luna NORPS-1

4) Design

The schematic design of the system was created via the software Proteus. The sensors selected through the research chapter were implemented within the design along with a variety of other components needed to ensure the system operates correctly. After running a simulation via Proteus to make certain the system functioned correctly a hardware assembly was completed via a breadboard.

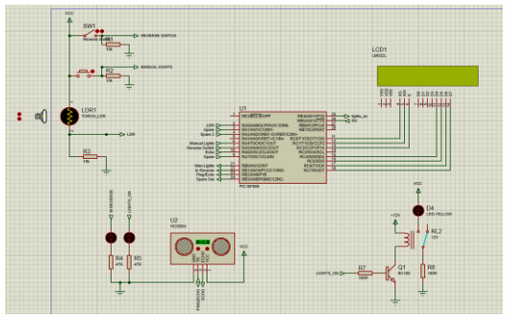

Figure 3: Proteus Schematic Design

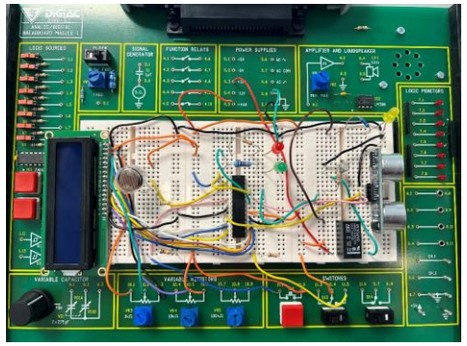

Figure 4: Breadboard Design

5) Testing & Results

Various methods of testing were carried out to ensure the system functioned correctly. The Proteus software and workshop equipment was used to completed the testing.

Testing to ensure the ultrasonic sensor measures accuracy:

Figure 5: Ultrasonic Sensor Test

6) Conclusion

The project was deemed successful as it was evident that a microcontroller could be used to assist parking aid and automatic headlights within an automobile.

The system was able to implement all of the design aims whilst meeting the objectives that were set out.

The additional features that could of been included in the system:

- Blind spot detection
- External Lighting – Indicators/Reverse
- Parking aid bleeper