HOYT MEMORIAL LECTURE

"STOP POURING, START CASTING"

J. Campbell
University of Birmingham, UK

Copyright © 2012 American Foundry Society

Editor's Note: *The Charles Edgar Hoyt Memorial Lecture is presented each year during the American Foundry Society's Metalcasting Congress to provide an opportunity for leading metalcasting experts to express their thoughts on a topic of their choosing. The lecture is intended to represent the many diverse voices in the metalcasting industry. The words and opinions expressed are those of the author and are reprinted with minimal editing.*

Abstract

The necessity to stop the pouring of liquid metals is becoming urgent. Pouring is the main source of entrained bifilms. Bifilms are the fundamental mechanisms which initiate all our familiar casting problems including porosity, hot tears, low mechanical properties, corrosion initiation etc. As lattice dislocations explain plasticity, bifilms explain pore initiation and fracture initiation. Only when pouring is eliminated (or, at second best, sufficiently controlled) will casting processes start to achieve their potential to deliver routinely sound and reliable castings (with the additional potential to make healthy profits!). Furthermore, with simplified foundry designs, including the elimination of pouring, the casting industry has the potential to produce products which in some cases might expect up to 1000 % improvement. Engineering throughout the world would be revolutionized. Although not widely realized, evidence for massive benefits from bifilm-free metals already exists in the Al alloy and Ni alloy casting industries. The groundwork is in place for a historical revolution in the casting industry.

Keywords: *Bifilms; counter gravity; Al alloy; superalloy; casting revolution.*

Introduction

Today, I want to share my vision for the casting industry with you. At this time I see us making mediocre products, with significant difficulty, and significant hard work. My view is that this need not be so. Today, I want to explain why.

We all know that there are easier ways to make money than making castings! The fact that we stick with it indicates that there is more to it than the money. Some might even suggest we are in it for the love of it. Whatever the reason, we know we must need our heads examined.

The opportunity to make this presentation today makes me feel particularly humble; there will be many of you here today who in a lifetime in the casting industry may have made even more scrap than me. Many know the feeling of standing over our scrapped casting, already having run out of delivery time, and with the customer threatening to take away the pattern work at the end of the week. There has to be a better way. As I mentioned earlier, that is what I want to talk about today. There is a better way. Furthermore, it promises to be exciting.

Earlier in my life, when I set up and managed a foundry, I was constantly frustrated by not knowing the answers to casting problems. Eventually, after what seemed a lifetime, I finally migrated from the industry into the University, where I was able to set up a video x-ray unit through which we put thousands of castings to see what happened during pouring. I finally started to find some answers. The answers were awesome. I had to throw away the textbooks. The existing books gave the wrong answers.

The correct answers were so simple, deceptively simple in fact, but life-changing. They concerned the surface oxide on the melt. The entrainment of the surface oxide caused the surface oxide to fold over, entraining either (1) a lump of air that we call a bubble, or (2) entraining nothing, but folding dry side to dry side, creating a doubled-over film with a central unbonded interface like as a crack (Fig. 1), eventually to be known as a bifilm. The turbulent pouring of metals fills the liquid with bubbles and cracks. The only real difference between these two entrainment defects is the amount of air each contains. It is no wonder that we all suffer mediocre and variable properties in our castings.

The turbulence of pouring ensures that the bifilm is raveled up into a compact form. This convoluted crack is a feature unique to castings. It is nothing like the geometry of an engineering crack propagated by stress. In this compact form it rattles though the runner system, defeating the filter, and finishes in the mold.

Now, in an environment in which turbulence gradually comes to a stop, it starts to open once again; a process I call unfurling. It can now unravel and straighten, developing into something more like an engineering crack; it becomes a serious defect.

If there is gas in solution in the melt, or if there is a shrinkage condition in which pressure is falling, unfurling can be followed by inflating. Now at last, we can explain porosity, hot tears, cracks and loss of properties for the very first time. All these defects can be eliminated by attention to the quality of the melt and the effectiveness of the filling system.

The two forms of bifilms, compact (furled) and open (unfurled) are the reasons why chilling gives good properties, and slow cooling gives poor properties, a fact that we all know.

For the metallurgists among us, the bifilm concept has come a long way since its introduction about a decade ago. Whereas the lattice dislocation is associated with plasticity, the bifilm appears to be associated with fracture initiation. Furthermore, there seems mounting evidence that the bifilm is the *only* initiation mechanism for cracks. Thus its presence may be essential for failure by cracking. It seems likely to be present at the start of every fracture.[1]

Thus, although compact bifilms (Figs. 2 and 3) give better properties than unfurled bifilms, because the bifilm initiates fracture, even better properties are to be expected if bifilms can be eliminated completely! We shall explore this possibility which turns out to be especially exciting!

The problem with bifilms is that they are often invisible; the oxide formed on the melt during entrainment has only a few milliseconds to grow before it is submerged, with the result that it is extremely thin, often as little as 20 nanometers thick, meaning just a few molecules thick. This is the reason they have lurked in our cast metals for the past two thousand years but have escaped our attention. You can find them if you really look. In fact, when looking at a fracture surface it is often a problem to find any evidence of metal; the surface is often covered almost completely, if not completely, with the remnants of an oxide bifilm that clearly originated in the liquid state.

On a radiograph, when they are visible, the bifilms can be observable because of their association with bubbles and with retained air inside the bifilms. These look *exactly* like shrinkage. These features are usually *never* shrinkage. They are usually never shrinkage because metalcasters have a good natural understanding concerning the correct feeding of a casting. Because of this expertise, in my travels around the world visiting foundries I almost never see any shrinkage. How is it possible to see shrinkage in a casting that has been well fed? In contrast, I see plenty of entrained oxides. We should never say the phrase "It is shrinkage." We all need to repeat and learn the phrase, "It *appears* to be shrinkage," keeping in our minds the subsequent rider "but probably is not." Masses of convoluted bifilms are common in castings, whereas shrinkage is rare. We need to reinterpret the evidence before our eyes.

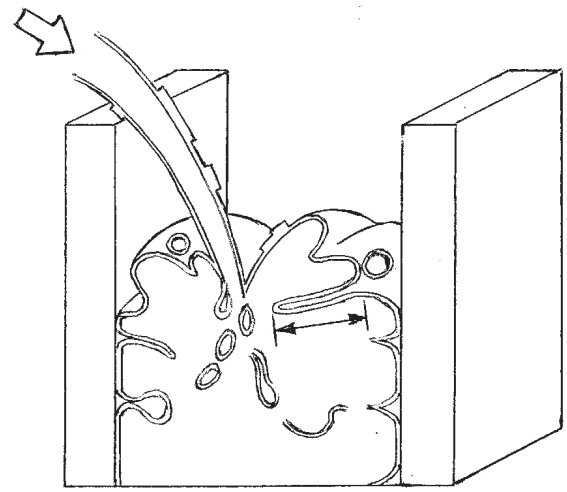

Figure 1a. Turbulent pouring is shown above.

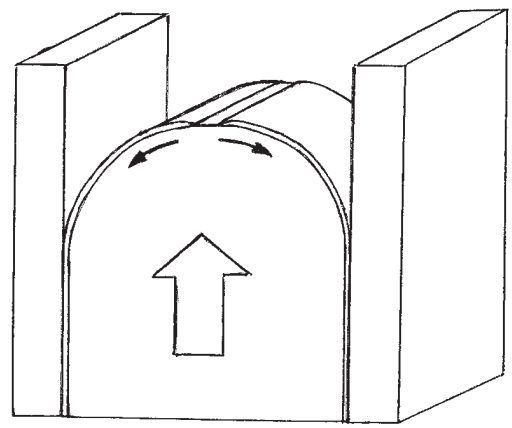

Figure 1b. Counter-gravity filling, creates undamaged metal plus a smooth surface finish.

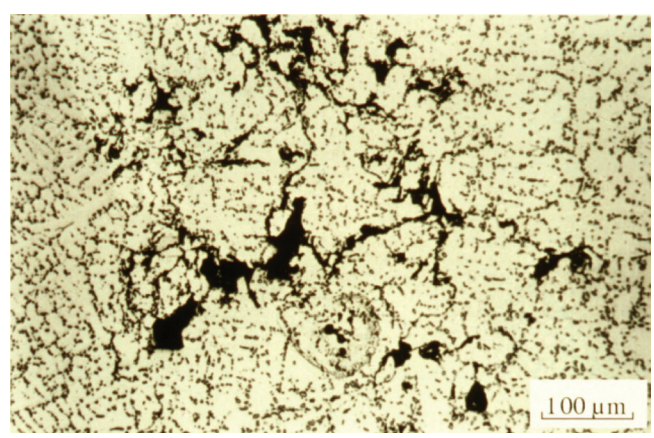

Figure 2. Entrained compact bifilms with typical air pockets.

Evidence For Bifilms

Actually there is now a huge amount of evidence that bifilms exist. This is summarized in detail elsewhere.[2,3] My favorite evidence is the picture of the two samples of the same aluminum melt, one subjected to a reduced pressure (Fig. 3).

The same melt subjected to reduced pressure experiences the inflation of the residual gas trapped in the bifilm, thus opening them like the straightening of a balloon during its early stages of inflation. Mechanical properties of this material would be minimal.

The double nature of bifilms can be seen in Fig. 4, where the top film was removed in areas, revealing the glossy inside surface of the second film beneath. As long ago as 1959, bifilms have been directly observed in the melt by ultrasonics.[4] Mountford and Calvert supplied ultrasonic waves into an Al alloy melt, and watched bifilms flash reflected signals as they slowly rotated in the liquid. Only bifilms with a central gas-filled layer could act as such efficient reflectors since the gas layer could not transfer the elastic wave, but would reflect it effectively as a mirror.

They could be forced to settle to the bottom of the crucible by reducing temperature, causing the heavy Ti-rich compounds to precipitate on the bifilms and weigh them down, dropping them to the bottom of the melt like stones. The deep layer of sediment at the bottom of the crucible could be clearly seen. When stirred up again, the melt would become temporarily foggy, but would eventually settle out once again to re-form the layer of sediment. If the sediment was stirred and the melt immediately poured, the resulting castings were observed to contain messy oxide films in association with Ti-rich compounds.

Observations of solidified dross,[5] in which droplets of metal are encased in an oxide, and therefore unable to coalesce with their neighbors, are necessarily separated by a double oxide film (Fig. 5). Notice the effectiveness of the double film isolating pockets of liquid so effectively that they have quite different cooling rates as is seen from the difference in the size of precipitated silicon particles.

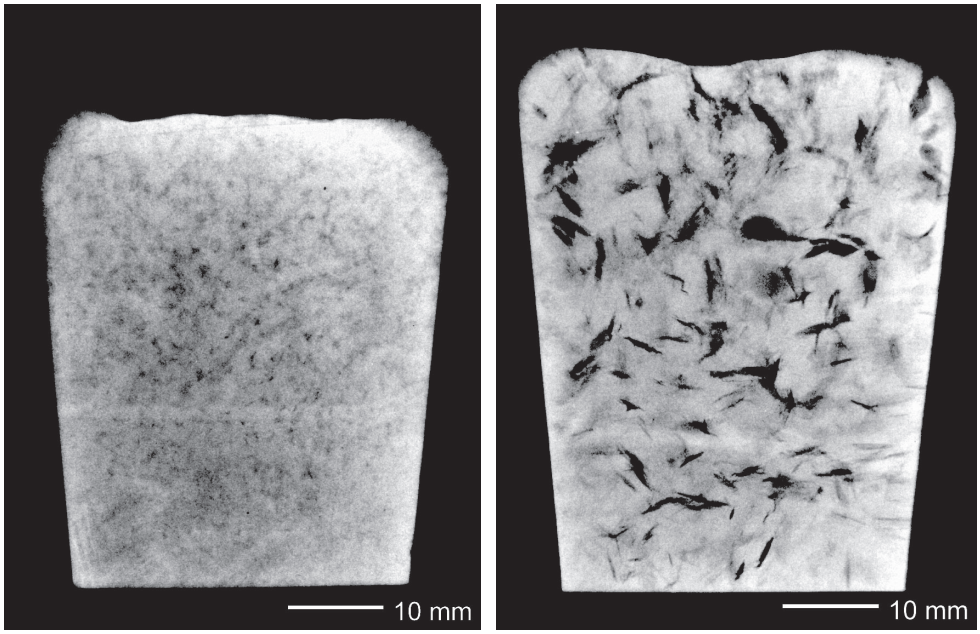

(a) (b)

Figure 3. Reduced Pressure Test samples of the same melt at (a) 1 atm. and (b) 0.1 atm. pressure.

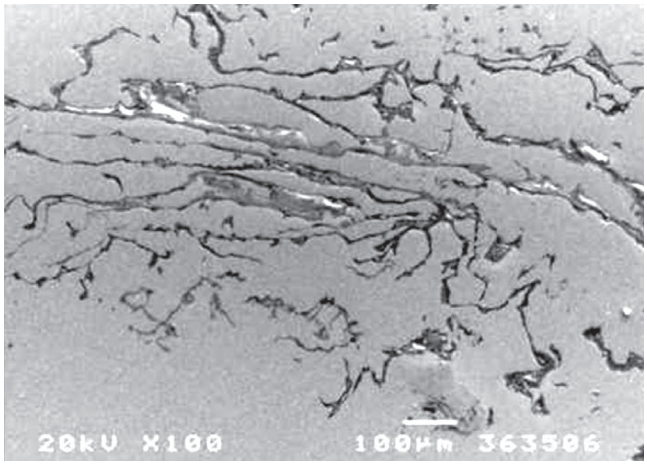

Figure 4. Optical micrograph sample was polished to reveal parts of the lower half of the compact bifilm.

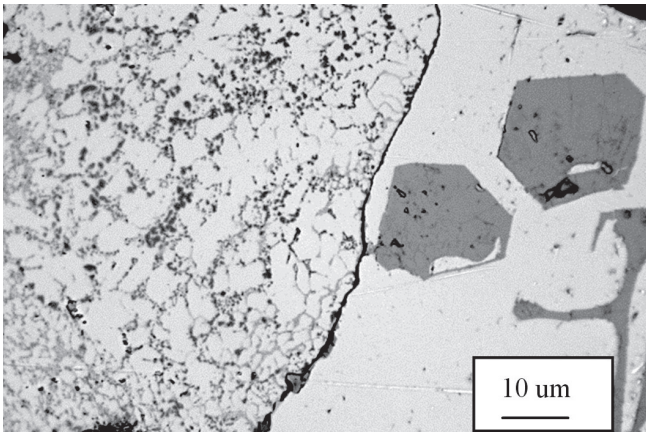

Figure 5. Bifilm separating regions of Al alloy so successfully that they solidify independently at different rates and times.[5]

Figure 6, unfortunately, is a typical scene in many of our foundries. The creation of dross in this instance would probably amount to 6 or 7 % loss of metal—a major loss from the bottom line, in addition to major losses of quality of the castings!

Counter-Gravity Casting

The lesson we need to learn is the avoidance of the entrainment of the surface film. The target for the elimination of bifilms is most difficult for aluminum alloy foundries, and might be tackled in several stages:

1. The avoidance of the entrainment of the old, thick oxide skins on the surfaces of charge materials would be achieved by never melting in a crucible or bath type furnace, but only melting on dry hearths, where the residual skins can be scraped off from time to time. Thus (1) the oxide skin and (2) its contained metal separate, going off in different directions in the furnace.
2. The elimination of the bifilm population remaining in suspension in the melt is probably best dealt with by sedimentation. This is achievable if the melt can be held quiescently, without convection or other stirring. For dense melts such as irons, steels and copper-base alloys, bifilms are much lighter and so will be expected to float out within minutes. For aluminum alloys, the oxide is denser than the liquid alloy but the entrained layer of residual gas makes the bifilms, on average, of neutral buoyancy. Furthermore, the high viscous drag experienced by the bifilm results in separation times measured in hours.
3. After the elimination of the primary oxide skins in the charge together with the inherited bifilm populations in suspension, it is then essential to avoid the re-entrainment of new bifilms into the melt. Clearly, pouring has to be avoided. Transferring the melt into the mold only uphill, against gravity, moves the surface film sideways to become the skin of the casting (Fig. 1b). This relatively thick oxide skin separates the melt from the mold and so aids the achievement of a good surface finish and can often eliminate the need for a mold wash. Also, of course, bifilm cracks in the body of the casting are avoided too.

In my opinion, the casting industry should abandon pouring by gravity at every point in the foundry. Melts would never be poured from a furnace, or from a ladle or crucible, and never poured down a sprue; the melt would only travel horizontally or uphill. This is not so difficult to engineer as shown in the Cosworth Process (Fig. 7). This was my early effort that I would probably not repeat in exactly this way if I had to do it again.

Therefore, for the future, think about counter gravity. However, please avoid the usual mistakes commonly made such as those built into the low pressure permanent mold (LPPM) process. In its most basic form LPPM will never ensure freedom from oxides. Oxides are generated during the massive turbulence during the filling of the furnace, and are formed in the riser tube as the melt washes up and down.

Furthermore, following each casting, the melt falls down the riser tube each time the pressure is cut off, the 'whoosh' effect in the bottom of the furnace stirring the oxide sediment and other inclusions back into suspension, ready to be introduced to the next casting. The LPPM process involving the use of separated furnace bodies is clearly an improvement, but still does not address all of the fundamental limitations of this process. The Cosworth use of the large holding furnace working at an essentially constant level, plus retaining the

Figure 6. Dross and bifilm manufacture.

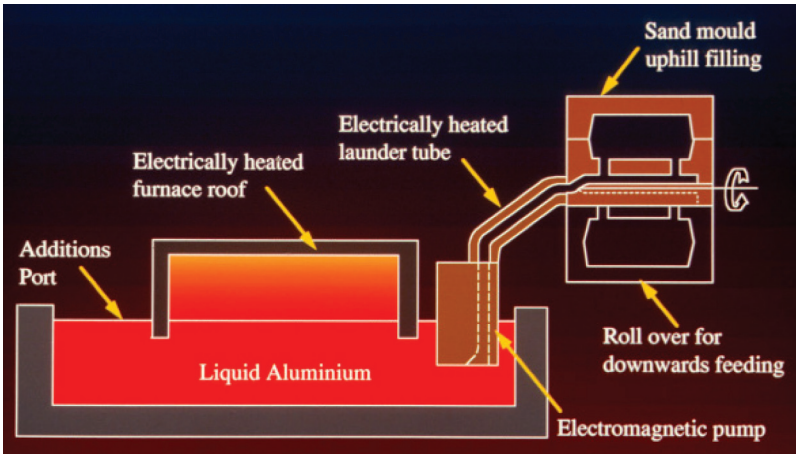

Figure 7. The Cosworth counter-gravity casting process.

melt at the elevated level close to the delivery point of the riser tube effectively eliminates these issues.

In contrast to the difficulties of the Al casting industry, for those of you casting heavier metals such as bronzes, irons and steels, the problem of eliminating bifilms to achieve a clean melt is far easier as a result of the large density difference between the melt and the oxide. Thus, for instance, the quality of steels is greatly damaged by pouring from the furnace from a height of 1 or 2 meters into a ladle, the damage has several minutes to float out, forming a surface slag, during the transfer of the ladle to the casting area. Preferably at this point a naturally pressurized filling system with a nicely designed offset step basin and stopper, or even better, contact pouring (Fig. 8) should be used.

Better still, for dense melts, placing the ladle in a pressurized enclosure and pressurizing to transfer the melt vertically into a mold uses the best melt at the base of the ladle. The highly successful Griffin process for steel railroad wheels has used this technique for over 60 years.[6] As a precautionary note, the ladle should fit the pressurized container as tightly as possible to reduce the volume of pressurizing gas. This enhances both safety and control.

However, the optimum solution for the really ambitious steel melter would be the elimination of the dangerous practice of using ladles by uphill transfer direct from the melting furnace by pressurizing the steel casing of the furnace. This technique reduces the volume of air required to a minimum.

Figure 9 illustrates an induction furnace designed to transfer metal directly into the molds (transported by crane or transfer car) positioned above the furnace for filling.

Thus, conventional overhead ladles with the dangers of transfer above workers and work areas, along with high maintenance and preheating costs, melt loss to slag, temperature loss prior to pouring, and melt damage (by inclusion generation during pouring), are eliminated with this new production method.

It will be important to introduce some device for cutting off the supply of metal at the exit from the riser tube so that immediately after filling, the mold and its liquid metal contents can be lifted clear, allowing the next casting to be made. A molded-in plug pushed down into place by a piston is illustrated as a suggestion for a multi-impression mold. Rapid cycling of molds through the casting station in this way will avoid the necessity for heating the top of the riser tube. (The alternative procedure of retaining molds in place to allow the casting to solidify on the casting station is not recommended; other problems are introduced, especially from convection which significantly interferes with the freezing pattern and may introduce shrinkage problems.[2]) The counter-gravity casting of metal directly from pressurized induction furnaces would be a huge simplification and streamline many bronze, iron and steel foundries, in addition to producing excellent castings.

Looking ahead to a time when we might all be using counter-gravity, we shall wave goodbye to casting defects. We will simply make castings and make money. Life will be so straightforward. For the skeptics among us, myself included, this is not such an overstatement. In my early experience with the Cosworth foundry, we had our counter-gravity system on one side of the foundry, reserved for our most difficult castings such as cylinder heads and blocks. On the other side of the foundry we used simple gravity pouring for all our covers and widgets. It is fair to say that with gravity we had difficulty making a good casting, whereas with counter-gravity it was difficult to make a bad casting. After a few months, I closed our gravity operation and put everything on the counter-gravity line.

There is a very good fundamental reason for this experience: with gravity, the melt is accelerated at 9.81 m/s^2 to speeds commonly in the range of 2 to 5 m/s, well above my theoretical safe speed of 0.5 m/s. This critical melt speed has now been repeatedly confirmed as accurate and effective.[2] Even

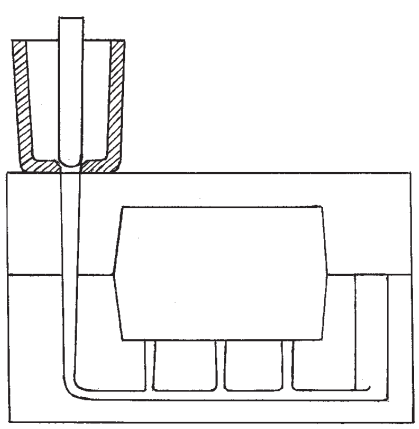

Figure 8. Contact pouring to avoid pouring basin entrainment problems.

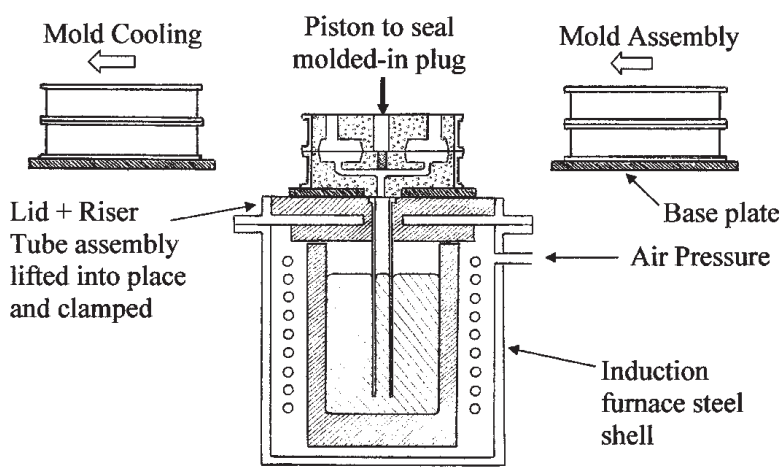

Figure 9. Induction melting furnace arranged to cast uphill and in-line.

the tiniest fall of a few millimeters can get the melt over the critical speed. Thus *all* falls of the melt damage the metal, and consequently damage profits. This is why pouring is intrinsically dangerous and should be avoided.

In contrast, with counter-gravity, the melt need never exceed 0.5 m/s so that the entrainment defects need never be created. Keep counter-gravity in mind for your 3 to 5 year plan for your foundry, it will pay dividends. Your production manager, accountants and shareholders will love it.

There are those who will argue that such benefits are only for aluminum alloys but not for 'real' metals such as steels. In this case, the doubter needs to take into account the millions of steel wheels produced each year by the Griffin process,[6] each weighing up to 350 kg. These wheels are a major part of the U.S. railway rolling stock, attaining a better safety record than forged wheels. Millions of much smaller precision investment castings in steels and Ni-base alloys are similarly produced.[2]

Gravity Filling of Molds

While you plan for your new counter-gravity foundry, during the interim you will need to continue to make money despite having to continue with gravity.

The 'Naturally Pressurized' gravity filling system (together with other techniques listed in Fig. 10) is the only recommended system that reduces some of the worst effects of gravity pouring.[2,3] It is important to recognize that when using gravity, no filling system design can work perfectly since gravity necessarily accelerates the liquid to unwanted high speeds; it is simply a matter of *damage limitation*; making the best of a fundamentally poor technology for mold filling.

The naturally pressurized system is my half-way house between the traditional pressurized and unpressurized systems, both of which have serious problems. Both these traditional systems should be discontinued as soon as possible.

The fundamental concept underlying the naturally pressurized bottom gated system is that it is modeled on the natural way that the metal falls under gravity. This is a tapering stream, around which we mold our runner system, effectively bringing the mold surface up to the falling jet so as to just touch it. When the metal and mold surface touch, friction is introduced. Fortunately, the friction provides drag, making the melt work a little to fall down the sprue channel, generating the buildup of a *natural* back pressure in the metal, so that the melt gently pressurizes the walls of the mold as it falls.

In this way the mold is supported by the gentle pressure of the melt, and sand inclusions cannot occur (sand inclusions tell you that the runner system is not pressurized, but the melt is sloshing about, damaging the mold and oxidizing away the sand binder to create sand inclusions). The natural pressurization of the whole system by the natural action of friction on the flow ensures the exclusion of air. It is essential to exclude air from the filling system.

A quick check-list of features includes:

- Avoid the conical-shaped (trumpet) inlet to the down-sprue. This is by far the worst feature of the whole filling system. The funnel shaped basin acts as an air pump, entraining on average 50 % air into the metal stream. As a result, the casting is effectively filled by a dispersion of 50% air and 50% metal. Any hope of a good casting fades from this moment on. The use of either (1) contact pouring (Fig. 8) or (2) less optimally, an offset step basin fitted with a stopper which is raised when the basin is correctly filled (Fig. 11) is a necessity. For the sake of emphasis to underline this fundamental issue, a conical basin must be avoided and replaced with an offset step basin (plus stopper) or by contact pouring. (Other measures to reduce the bad effects of a conical basin and poor sprue are possible as poor second-best techniques[2]). The remainder of the filling system should be a simple naturally pressurized filling system design. This is shown in Fig. 11 and described in the outline below and in detail elsewhere.[2]
- Avoid any sharp ledges or steps such as mismatch (especially in high velocity channels such as sprues) and encourage smooth flow (as much as possible) in straight lines. For instance stepped runners should become tapered runners.
- Gate into the mold cavity at its lowest point (not at the joint) so as to avoid a 'waterfall' condition inside the mold cavity.
- Target ingate speeds in the range 0.5 to 1.0 m/s (pushing the theoretical allowable speed to 1m/s seems usually just allowable in practice).

(In passing, I cannot resist pointing out that this pedantic and rather irritating list of recommendations effectively disappears if counter-gravity filling is adopted. Counter-gravity is just so much simpler!)

My 10 Rules for Casting[2]

1. Use good quality melt	6. Avoid shrinkage damage
2. Avoid entrainment	7. Avoid convection damage
3. Fill only smoothly uphill	8. Reduce segregation damage
4. Avoid bubble damage	9. Reduce residual stress
5. Avoid core blows	10. Provide Location Points

Figure 10. My 10 Rules for Casting.[2]

Personally, I tend not to use the so-called gating ratios, but for those of us that do, the naturally pressurized system uses the ratio 1:1:N where the value of N depends on the height of the sprue. For sprues varying between 0.2 m and 2.0 m, N takes on the values 4 to 12 when targeting an in-gate velocity of 0.5 m/s. I find that I can usually push the ingate velocity up to 1 m/s before any noticeable damage occurs in the casting, in which case N can take on the values 2 to 6. These ratios are quite different to the traditional ratios. The initial 1:1 ratio (effectively meaning the sprue exit and runner have the same area) ensures that the runner stays pressurized.

In particular, the unpressurized system might use 1:2:4, the expansion by a factor of 2 between the sprue exit and the runner entrance being intended to halve the melt velocity as it enters the runner. In fact nothing of the kind happens; it is a disaster; the melt continues at its same speed jetting along the largely empty runner. The loss of pressurization against the walls of the runner means that the system becomes an efficient device for entraining bubbles and bifilms, reducing the quality and properties of the casting.

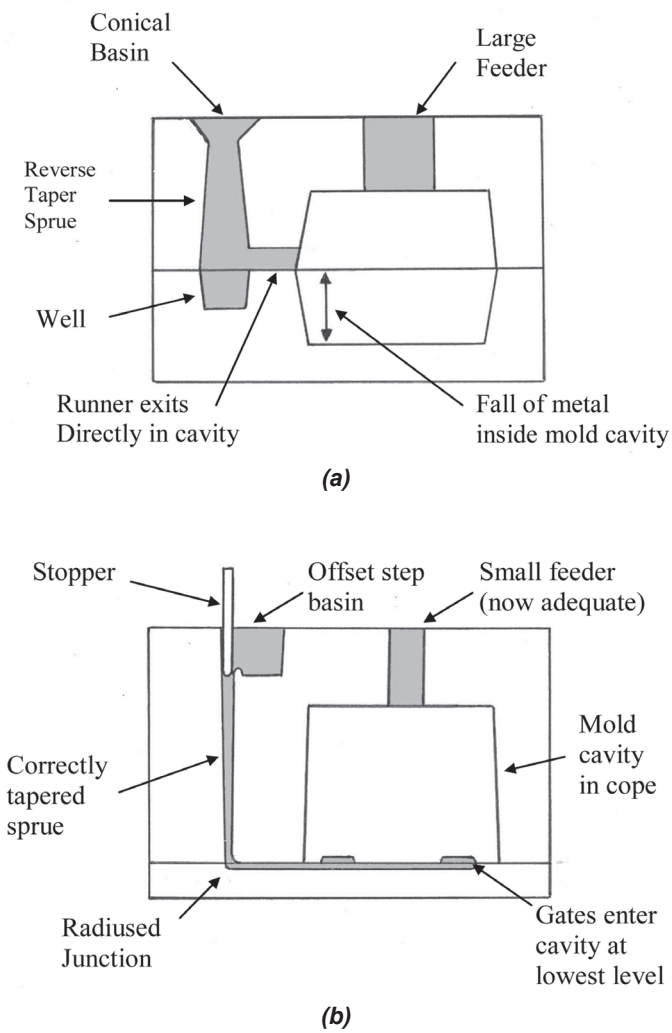

Figure 11. "Good" and "bad" gravity systems are shown.

The use of contact pouring has now been demonstrated on high speed Disamatic lines, where the launder can be set down on the mold and the stopper raised to fill the casting

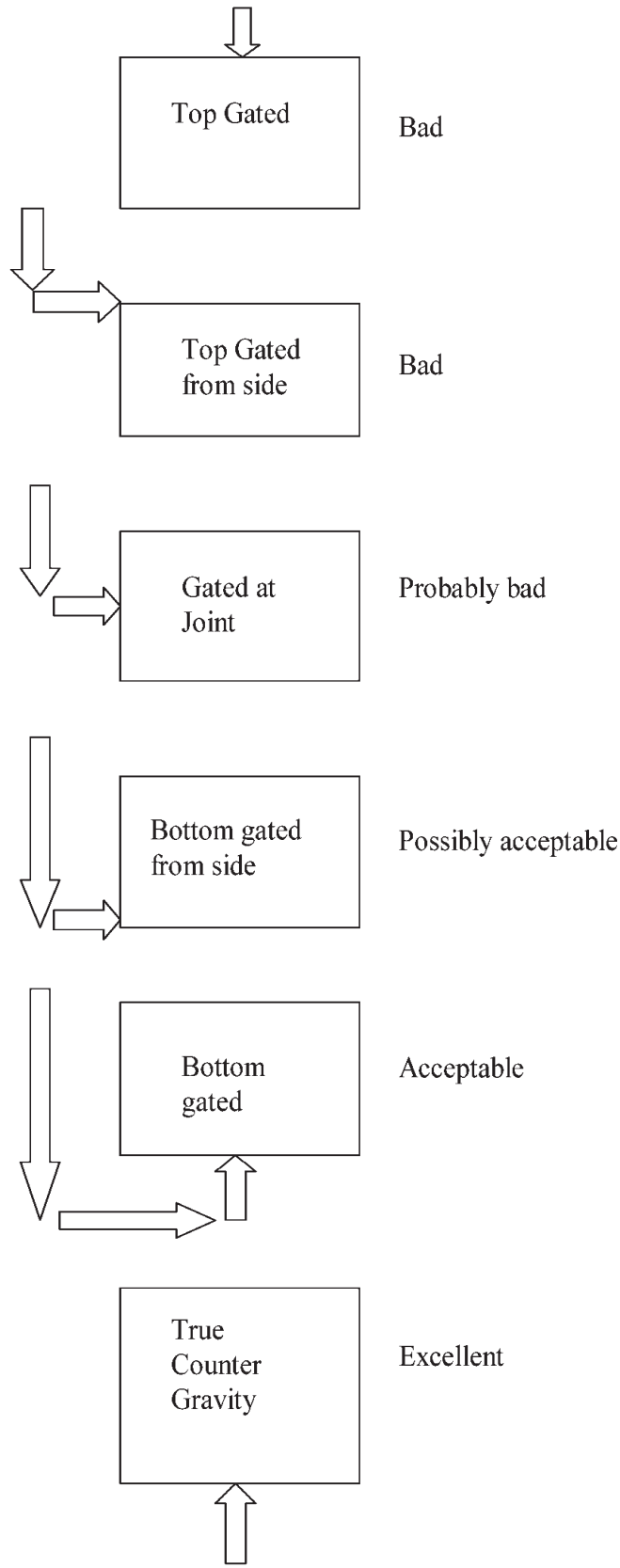

Figure 12. Gating options for castings.

(it is unfortunate that most of the remaining runner system is usually too awful to allow the benefits of this improved metal entry system to be seen. A contact pour system matched with a nicely designed naturally pressurized filling system would work excellently).

Figure 12 illustrates the options for gating, showing how the bottom gated system is the least "bad gravity" pouring option. This option is often mistakenly confused with counter-gravity which involves no pouring at all. It is important to realize how different a true Counter-Gravity system is, in the sense that all *pouring* of metal is eliminated, with huge benefits to the casting.

There are many other filling system developments that we do not have time to discuss today. These include the surge control systems and the exciting new vortex gate.[2,7]

These all appear to work well for steel castings even for the most difficult super duplex stainless varieties, to the point at which it seems that expensive treatments such as argon/oxygen/degassing (AOD) may be largely redundant.[7]

Filling System Filters

It is worthwhile to divert a little to show how a relatively small feature such as a filter can be used well or badly in a filling system. It will serve to illustrate how gravity systems, with their unfortunately high velocities, are hypersensitive to small errors in the design or assembly of a filling system.

At one time it was thought that filters filtered. In the technology used for the semi-continuous casting of aluminum it is true that filters filter. This happens because the filters are typically approximately 1 meter cube and the flow rate of metal through them is measured in millimeters per second. In filling systems for shaped castings, the filter is typically 1,000,000 times smaller in volume and the flow rate 10–1000 times higher. There is no way filtration can work effectively in this severe concentration of energetic flow, effectively up to a billion times too fast; liquid metal blasts through the filter, the immense power of the flow driving debris ahead. On other occasions the filter can generate even more defects after the filter than arrive at its front. There is usually little guidance from filter manufacturers on how to avoid these problems.

Before launching into the solutions to these issues, it is useful to forget that the filter was ever intended to filter. However, having said this, I am aware of filters becoming blocked (plugged) by oxide debris. However, this only happens if a conical pouring bush is used together with a poorly designed (usually oversized) sprue. These features generate so much oxide film (in the form of bifilms) that a filter is easily overwhelmed. If a properly designed basin is employed together with a correctly designed narrow tapering sprue, almost no oxide is entrained and in my experience the filter seems to have no limits, continuing to pass literally tons of metal without ever becoming blocked.

Even so, it is best to assume that the filter in a runner system does not act to reduce oxide bifilms in any significant way. Bifilms are expected to pass through most filters because they will be in compact, convoluted form when traveling through the filling system, and thus a high proportion will have an average diameter smaller than the pores of most filters. Only after reaching the tranquil conditions in the mold may the bifilm start to unfurl to its full size, reducing the properties of the casting, and starting to grow pores and cracks.

In fact, it is best to treat the filter only as a flow control device. Experiments have shown that the action to improve the cleanliness and properties of castings is 90% due to flow, and only 10% to filtration.[8]

As a flow control device, a filter is one of the very few devices that can be used in runner systems to reduce metal speeds. Practically no information is available on this important benefit, thus good research in this area is needed. In the meantime, I use the simplification (which is almost certainly not particularly accurate) that a 20 ppi ceramic foam filter will reduce speeds by a factor of 5, whereas a 10 ppi filter will only reduce speeds by about 2.5 to 3.0 times. For these reasons I might choose to use a 20 ppi filter to reduce speeds by a factor of 4, enlarging the subsequent runner area by the factor of 4. If I attempt to enlarge the downstream runner more than this, the system would be in danger of becoming unpressurized and thus in danger of entraining air and oxides. Maintaining pressurization in all parts of the filling system is essential.

The other key aspect of the use of a filter in a runner system is to protect its back. In conditions of high pressure or high velocity flow typical of many gravity situations (these conditions also require to be defined by research!) the melt jets from the pores at the back of the filter. This action of the filter was reported by Carl Loper and his students[9] as long ago as 1996 but has been ignored by filter manufacturers, researchers and foundrymen alike. The jets shoot through the air, becoming oxidized and creating oxides in the ensuing turbulence, thus degrading the casting. This has to be avoided by providing a geometry in which the rear face of the filter is quickly protected by liquid metal, so that the jetting is suppressed.[2] I recall painful memories of once overlooking this issue, and so scrapping an immensely expensive magnesium aerospace casting. These experiences keep one humble.

Ni-Base Turbine Blades

An industry that has given me particular cause for concern has been that casting Ni-and Co-based superalloy turbine

blades for aircraft engines. The vacuum melting and pouring arrangement used universally at this time is seen in Fig. 13. The fall 'H' is a meter or more, giving conical sprue entry velocities in excess of 4.5 m/s, ensuring that energy is available for the entrainment of copious quantities of bifilms. Thus the castings are damaged.[2]

Many make the point that casting in a vacuum should avoid the creation of surface oxides on the melt that can be subsequently entrained to form internal cracks. However, the unfortunate fact is that the vacuum is not sufficiently pure to avoid oxide formation at high casting temperatures. In effect the vacuum is merely dilute air. Furthermore, the main alloying elements, particularly aluminum, titanium and chromium, are such powerful oxide formers that they effectively 'getter' the available oxygen from the environment.

It follows that turbine blades contain bifilms as crack-like defects. These are usually extensive, measured in millimeters or even centimeters, but which are often too thin to be detected by either x-ray or dye penetrant. The sobering consequence is an incapable production process monitored by incapable testing techniques. The result is the fitting of defective blades into engines, in particular for single engine aircraft, the predictable engine failures and loss of aircraft and personnel.[10,11]

This need not happen. The counter-gravity filling of investment molds would eliminate this problem at a stroke. Blades could be made quicker, at greatly reduced cost, and without defects, so that costly testing by x-ray or dye penetrant would be a thing of the past. Clearly, an improved casting technique is needed as a matter of urgency. In addition, improved testing would also be a useful back-stop; at this time only sophisticated resonance techniques appear capable of detecting bifilms and discriminating between those that are harmless and those which can threaten service-life.[12]

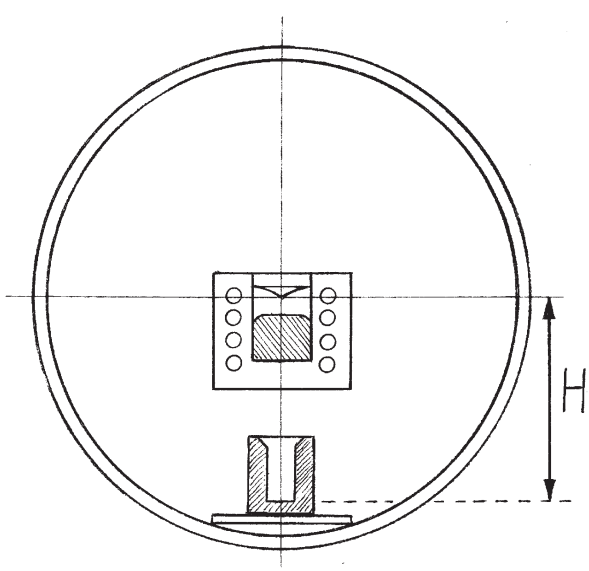

Figure 13. Typical vacuum melting and casting furnace.[2]

Future Potential of Bifilm-Free Castings

You may by now be wondering whether all this talk about bifilms is really meaningful; for instance even if it were possible to eliminate bifilms, would the effort by worthwhile?

As it happens, we already have evidence from castings that freedom from bifilms has dramatic, undreamed-of benefits. By a fortunate accident, the Ni-base casting industry already enjoys the huge benefit of a really important casting development involving the reduction of the bifilm population.

The famous result[13] for directionally solidified (DS) material and single crystal alloys is shown in Fig. 14 illustrating (it is claimed) the massive benefits for the removal of transverse grain boundaries in DS material, and *all* grain boundaries in the single crystal. However, this argument assumes that grain boundaries are weak. This is not true. If it were true all of our bridges would be in the river. Admittedly, creep is a high temperature phenomenon, but even so, decoherence of grain boundaries is not to be expected. Atomic modeling (MD simulations) of boundaries by Yamakov[14] confirms that boundaries have between 80 and 100 per cent of the strength of the matrix depending on the structure of the boundary.

However, grain boundaries are often the sites of bifilms, which are pushed by advancing dendrites, and so automatically and often find their way to grain boundaries. Here they sit as invisible *unbonded* interfaces. Naturally, those boundaries that contain bifilms *appear* to decohere. In fact, they are effectively pre-cracked as a result of the poor casting technique.

In my view, the correct interpretation of Fig. 14 is as follows: equiaxed castings solidify quickly before bifilms in suspension in the liquid have much chance to separate. Furthermore, the grains grow in all directions, effectively

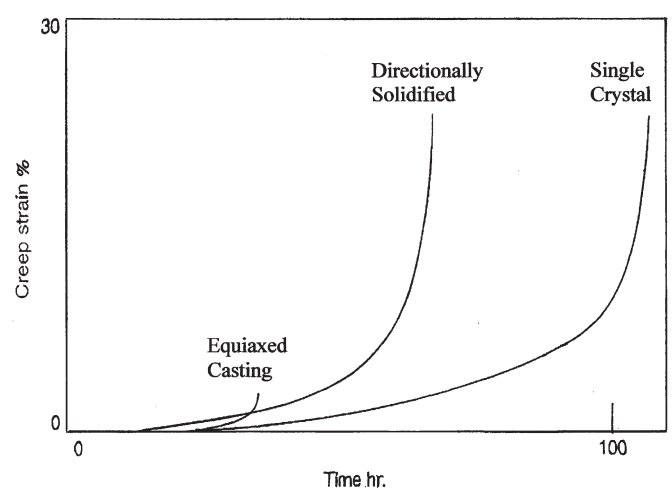

Figure 14. Creep to failure of equiaxed, DS and single crystal Ni-base alloy.[13]

trapping the bifilms in-situ in the grain boundaries. In contrast, the DS and single crystals grow vertically upwards. This fortunate choice of growth direction encourages bifilms to float ahead and so escape from being trapped in the solidifying alloy. Furthermore, those that happened to be slow to float would be pushed. Only relatively few would remain trapped, probably as a result of them adhering to the mold wall.

Thus Fig. 14 has nothing to do with grain boundaries. It is the best example produced to date for the immense benefits to metals from the avoidance of bifilms. It is clear that the benefits are huge. The elongation in this case is improved by 800%, and this is clearly a *minimum* because these castings were poured so badly. Improvements in the region of 1000 to 10,000 % are probably to be expected for properly cast blades. The same benefits are expected for Mg alloys, Al alloys, Cu alloys and steels. However, the bottom left hand side of Fig. 14, the equiaxed result, is currently where we all are; the top right hand side shows the minimum position of where we all could be. Moreover, we do not need castings to all be single crystals to get there; we simply need to clean up the metal.

Clearly, the Ni-alloy casting industry is already achieving some of the benefits of bifilm-free material, already demonstrating that fantastic properties can be achieved (although, now realizing that the effect has nothing to do with grain boundaries one can speculate that there would almost certainly be easier and less costly ways to make turbine blades with similar properties rather than going to the trouble of growing single crystals, even though, admittedly, single crystals have other benefits of course!).

The other message from this interpretation of Fig. 14 is that the upper limits found for the DS and single crystals are currently defined by fracture, indicating that the creep life of these samples was limited by residual bifilms, and should have been even greater as we have already noted.

The Al industry can also demonstrate that massive benefits can be gained with bifilm-free material.[15,16] The elongation values shown in Fig. 15 are based on tensile tests results mainly from aerospace foundries. However, despite this respectable source only very few foundries hit the maximum potential elongation, apparently by chance, and only on a few occasions. Most results are lamentable.

For 356/357 alloys at a yield strength of 350 MPa a potential elongation is seen to be as high as 15%. For 206 alloy at yield 350 MPa the elongation could be 18%, and 201 alloy might approach 500 MPa yield with 12%.

If these performances for Al alloys are not already sufficiently impressive, these theoretical limits are based only on the *uniform* elongation behavior. Thus if the necking elongation were included these elongation to failure values

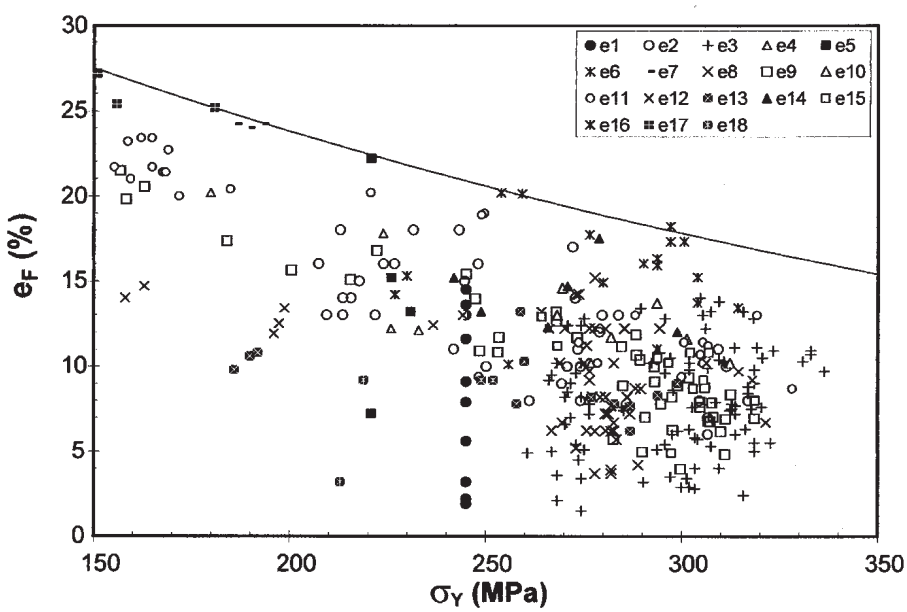

(a)

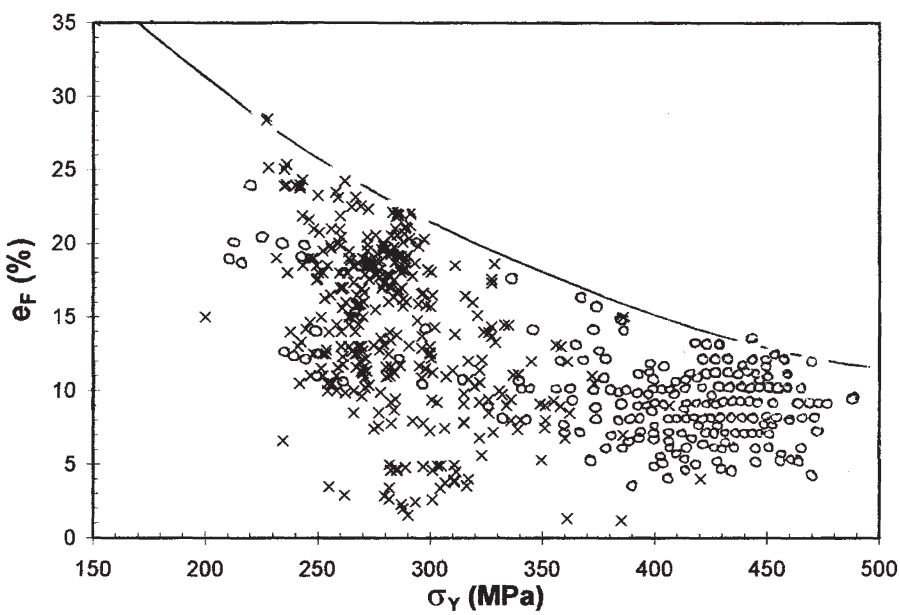

(b)

Figure 15. Ductility potential of (a) 356/357 and (b) 206/201.[6,7]

would approximately double. I would expect that values such as 50 to 100 % elongation (corresponding of course to 100 % reduction in area) at full strength should be quickly achievable.

Only gray cast iron may be an exception, not achieving these wonderful future benefits, since bifilms may be necessary to nucleate the graphite flakes and so will be necessarily present.[17] However, it is a comfort that ductile iron already achieves some ductility because of reduced bifilm content (not as usually claimed as a result of the spheroidal shape of its graphite!). However, it is tempting to speculate what its properties might be if completely cleared of bifilms.[2,17]

Engineering Implications

Metals cannot fail by their atoms being pulled apart since the stress required would be the theoretical strength corresponding to a stress in the region of 50 GPa.[1] For the reason that interatomic bonds are so strong, pores cannot be nucleated in liquid metals, and cracks cannot be initiated in solid metals. Defects such as cracks and pores can only be initiated from *unbonded* interfaces. It may be becoming clear that the *only* defects in metals that can provide large unbonded areas to promote failure are entrainment defects; i.e., particularly bubbles and bifilms. It follows therefore that probably *all* premature failures of engineering metals (rather than failures due to engineering design) are the fault of the casting industry.[1] We all need to be aware of this sobering fact.

The converse of this fact is that the casting industry has the potential to deliver products of amazing properties that are essentially unbreakable. The Ni casting industry is already nearly achieving this with its single crystals (even though it could do better), and the Al casting industry is doing it occasionally (unfortunately, in general, more by luck than judgment). Clearly, it can also do better!

It is quite clear that most of our research into alloying and heat treatment to improve properties is practically a waste of time compared to the benefits of achieving defect-free material by good casting techniques. In fact, simple, low cost bifilm reduction techniques achieve simultaneous increases in both strength and ductility; an achievement usually unattainable by alloying or heat treatment.

For the future, it seems to me quite within our grasp for all of us to benefit permanently from what appears at this time to be a utopia. It is perfectly possible to redesign our foundries and our casting techniques to deliver products on a routine basis that are essentially *unfailable*. Our test bars would be immensely strong but never fracture, most probably simply necking down to failure by ductile parting at 100 % reduction in area. (Our current testing machines would be unable to extend test bars sufficiently–the test bars would be essentially superplastic.)

We, as the casting industry, have it within our power to transform and revolutionize engineering. If we made steps in this direction we would become the stars of the engineering industry, and be able for the first time to charge the prices our products deserve. I look forward to that possibility.

Concluding Thoughts

As many of you know, one of my chief claims to fame is that I appear to be the author of "The world's most unread foundry text books." Years ago it used to be the norm in UK foundries for one person to be given the responsibility for reading all the latest journal publications to keep the foundry abreast of the most recent developments. It would be valuable to re-introduce this practice. We need to invest in our own education. I recommend employing a motivated young graduate together with some reliable foundry text books (I can recommend a good author…). It could be a profoundly valuable investment.

Recommended Actions

1. Employ literate graduate(s).
2. Adopt bifilm reduction technologies (quiescent, non-turbulent, non-entraining melt handling).
3. Make an immediate interim change to naturally pressurized bottom gated gravity filling systems (no conical trumpets; no wells, no traps).
4. In the next 5 to 10 years change to a good counter-gravity system.
5. Stop pouring.
6. Proceed to making better castings at better margins.

REFERENCES

1. Campbell, J., "The Origin of Griffith Cracks," Met. & Mat. Trans B, 42B, pp. 1091-1097 (Dec. 2011).
2. Campbell, J., "Complete Casting Handbook," Elsevier (2011).
3. Campbell, J., "Concise Castings" American Foundry Society, Schaumburg, IL, USA (2010).
4. Mountford, N.D.G., and Calvert, R., Journal Institute of Metals 88 121-127 (1959-1960).
5. Dispinar. D., and J. Campbell, J., Mater Sci., 42, 10296–10298 (2007).
6. Hursen, H.H., Transactions of the American Foundrymen's Society, Des Plaines, IL, USA, 63, 367-372 (1955).
7. Puhakka, R. (Bob), personal blog; and papers in "Shape Casting: ASM 4th International Symposium in Honor of John Berry," editors Tiryakioglu, M., Campbell, J., and Crepeau, P.N., pp. 79-86 and 241-248 (2011).
8. Din, T., Kendrick, R., and Campbell, J., Transactions of the American Foundry Society, AFS, Des Plaines, IL, 111, 91-100 (2003).
9. Loper, C.R., Javoid, A., Hitchins, J.R., Transactions of

the American Foundry Society, AFS, Des Plaines, IL, 104, 57-65 (1996).
10. Transportation Safety Board of Canada, Report LP010/2006, "CT Turbine Failure," Aviation Reports–2006-A06P0010, http://www.tsb.gc.ca/eng/rapports-reports/aviation/2006/a06p0010/a06p0010.asp (3-22-12)
11. Campbell, J. and Tiryakioglu, M., "Bifilms in Ni-base Castings," submitted to Met. & Mat. Trans B (2012).
12. Grupke, C.C., Hunter, L.J., Leonard, C., Nath, R.H., Weaver, G.J., "Quality Assurance with Process Compensated Resonant Testing," AFS Transactions, AFS, Schaumburg, IL, Paper 11-036 (2011).
13. Versnyder, F.I., and Shank, M.E., Material Science & Technology, 6, (4) 213-247 (1970).
14. Yamakov, V.I., personal communication (2011).
15. Tiryakioglu, M., Campbell, J., and Alexopoulus, N.D., Met. & Mat. Trans A, 40A, 1000-1007 (2009).
16. Tiryakioglu, M., Campbell, J., Material Science & Technology, 25, (6), 784-789 (2009).
17. Campbell, J., "A Hypothesis of Graphite Formation in Cast Irons," Met & Mat Trans B 40B, (6), 786-801 (2009).