Prifysgol Cymru
Y Drindod Dewi Sant
University of Wales
Trinity Saint David

Application of Computer Aided Engineering Processes

Structural Design and Fluid Analysis ACHA6010

Rhys Williams

2004443

14/12/2022

Contents

1. Introduction 3

2. Software Validation 3

3. Simulation and Analysis of Studies 5

3.1. Rigid Body Dynamics 5

3.2. Static Structural Study 8

3.2.1. Setup of System Linkage 8

3.3. Steady-State Thermal Study 9

3.3.1. System Linkage 9

3.4. Meshing Validation 10

4. Analysis of Results 11

4.1 Initial Design 11

4.2. Iterative Design 13

5. System Usage 14

5.1 Limitations 14

References 15

Figures 16

1. Introduction

The utility of specialist CAD software is one of the most beneficial tools within the Research and Development sector of any engineering company. Computer aided design is a process which allows the user to replicate a 2D or 3D drawing/model from real world designs: 3D CAD carries more opportunity for research and development through the use of kinematic simulation and stress testing.

For this report, CAD will be utilised to simulate, analyse and improve the quality and performance of a product of choice, using kinematic simulations and stress tests. Ansys was the software utilised for this report: Ansys is a highly developed CAD software, developed for engineers to test multi-body simulation within real-world parameters ensuring tests are performed to the highest accuracy possible, however validation is still required prior. Ansys Workbench allows the user to set the data parameters for the product to abide by, such as material and which simulation/test is required. Ansys Mechanical is also used within the Workbench application; this allows the user to adjust the meshing settings, setup of the testing variables and the performance of the simulation.

2. Software Validation

A vital process prior to any testing and development of any product is to ensure the software of choice is suitable to cater the user's needs. This can be done via testing a specific product with known results and comparing the percentage of accuracy between results.

Material	Elastic-Plastic	Modulus of Elasticity	E	210000.000	MPa
		Poisson's Ratio	ν	0.000	
		Shear Modulus	G	105000.000	MPa
Geometry	Plate	Length	L	1.000	m
		Width	w	0.050	m
		Thickness	t	0.005	m
Load	Plate	Pressure	p	2750.000	Pa

Figure 1 – Cantilever beam specifications (Dlubal, 2022)

For validation within Ansys, a simple test was performed to ensure the level of accuracy meets expectations. Validations can be conducted in multiple manners, such as calculating a simple structural analysis on a part of choice followed by conducting the calculation through simulation on the chosen software, however for simplicity a validation example was sourced from a

secondary company and then tested within Ansys. The test consisted of applying a pressure (uniform load) to a cantilevered beam to find the maximum deformation. The beams dimensions and other specifications were listed within the example as shown in figure 1.

Following this, a beam of the same dimensions was modelled within Solidworks, another CAD software which primarily targets the modelling and kinematic simulation of assembled parts, and then imported into Ansys for its testing. Within Workbench, the test type must be selected prior to importing the part: when the application is initially opened a blank 'project' page is opened as the user's canvas. A column on the left of the project page contains all the system test types which is where the static structural test was selected from. Static structural is used to measure forces and effects of those forces on a non-moving part.

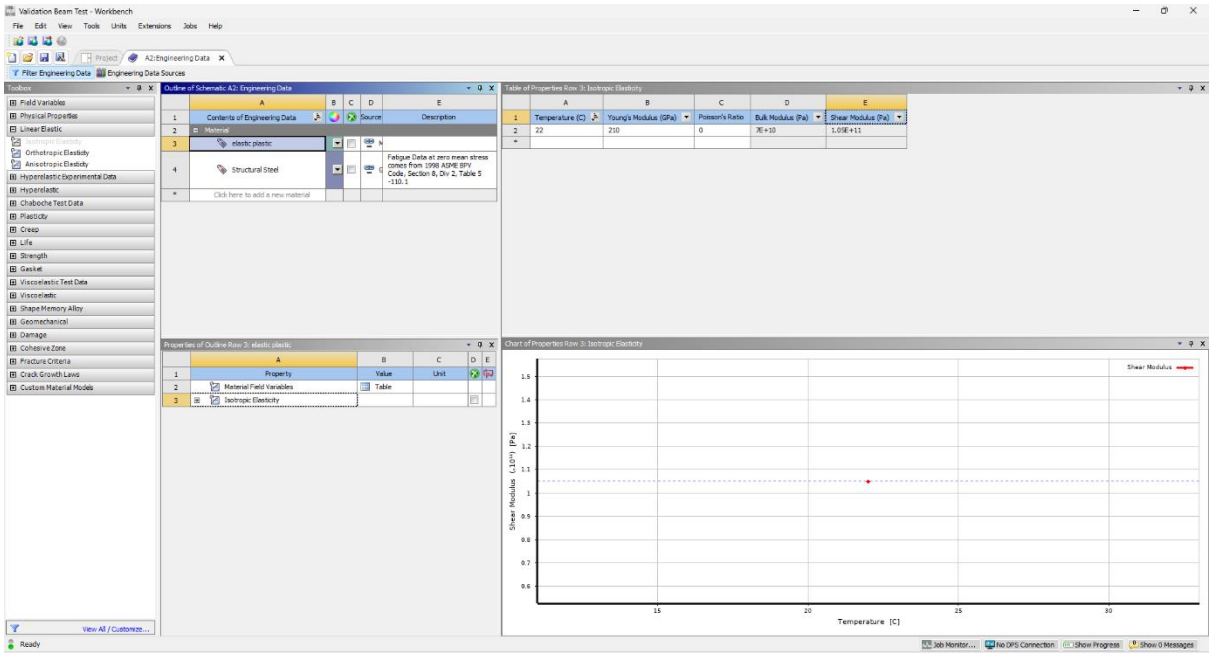

Figure 2 – 'Ansys Workbench': Screenshot of the Data Engineering tab

Working through the static structural test requirements, the material is first to be allocated to the product. Within the Data Engineering tab, a material must either be selected, or its properties must be specified; for the validation test, the material required specific properties to be set. Inside the 'Engineering Data' menu, users are prompted with another toolbox worth of submenus ranging from 'Hyperelastic' to 'Crack Growth Laws', though as the validation example listed the modulus of elasticity and the shear modulus values, the isotropic elasticity property was applied, from within the 'Linear Elastic' submenu. Alternatively, if the specific material is a known variable it can be obtained from Ansys' materials library, within the 'Data Engineering' tab and selecting

'Data Engineering Sources' in the top left of figure 2. Once the required property type is identified, the values for the variable can be set as seen above.

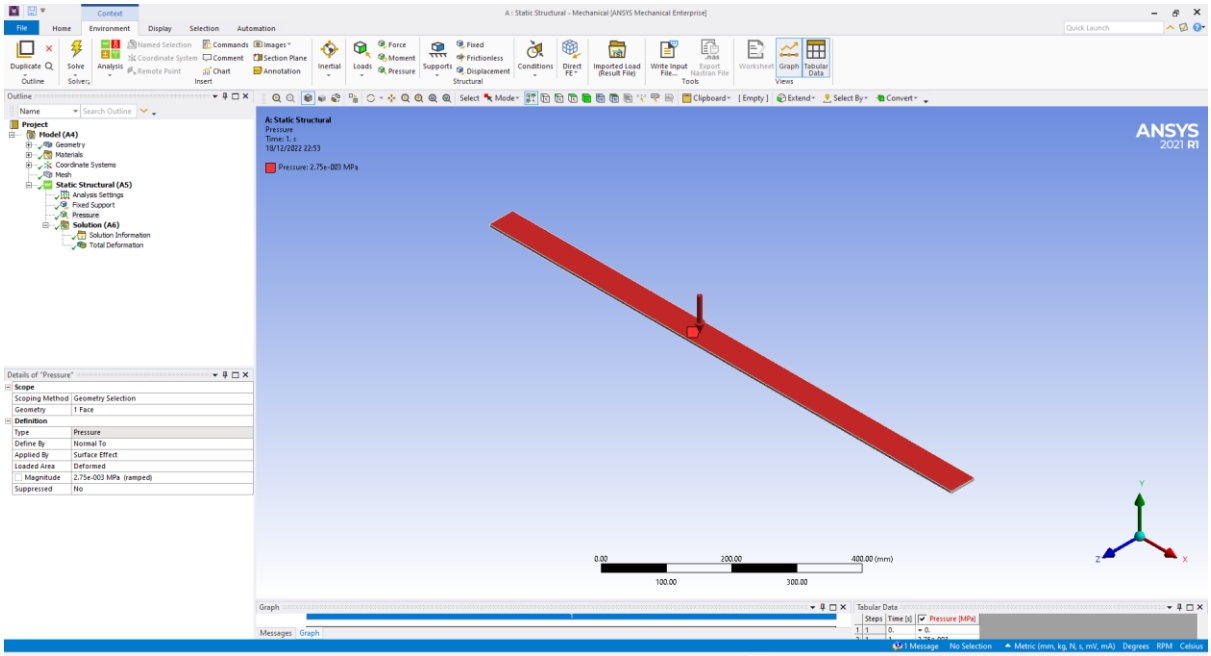

With material specified, the setup of the deformation loadings are applied. An initial constraint is applied to the edge face of the beam to simulate the behaviour of a cantilever; followed by a pressure being loaded across the beam uniformly, as to the specification of the example.

3. Simulation and Analysis of Studies

3.1. Rigid Body Dynamics

The main simulation and testing phases have been conducted on a piston from within an engine assembly consisting of a crankshaft, conrod, gudgeon pin and piston, with the con rod being split into two parts as if it had bolts clamping it to the crankshaft. Initially the engineering data must be setup, however with different properties to the validation test. The pistons material was specified to 6061-T6 aluminium (Noble, 2022) with thermal conductivity, thermal expansion coefficient, Poisson's ratio and a table containing a temperature dependent young's modulus.: the material allocation is performed after importing the assembly by selecting the piston from the geometry.

The initial test conducted was a 'Rigid Dynamics' study; this carries some variables which don't crossover with later studies, however the parameters set do not affect later stages: the results from which are exported and are imported back into the final study. Rigid dynamic studies assume that all parts within the study are rigid body's, allowing zero tolerance for deformation

to the part, however in this it is used instance solely to measure the loadings on the piston while simulating the assembly to operate at 5000rpm.

Subsequent to setting materials, importing the geometry is conducted via right clicking the geometry section and importing the assembly file, saved previously from Solidworks as a .STEP file. The modelling menu is now utilised to set the boundaries for the engine assembly, allowing the correct path of motion for parts connected to the crankshaft. This is done via a collection of 'joints' set with a revolute motion to each, allowing the cyclic motion around the crankshaft,

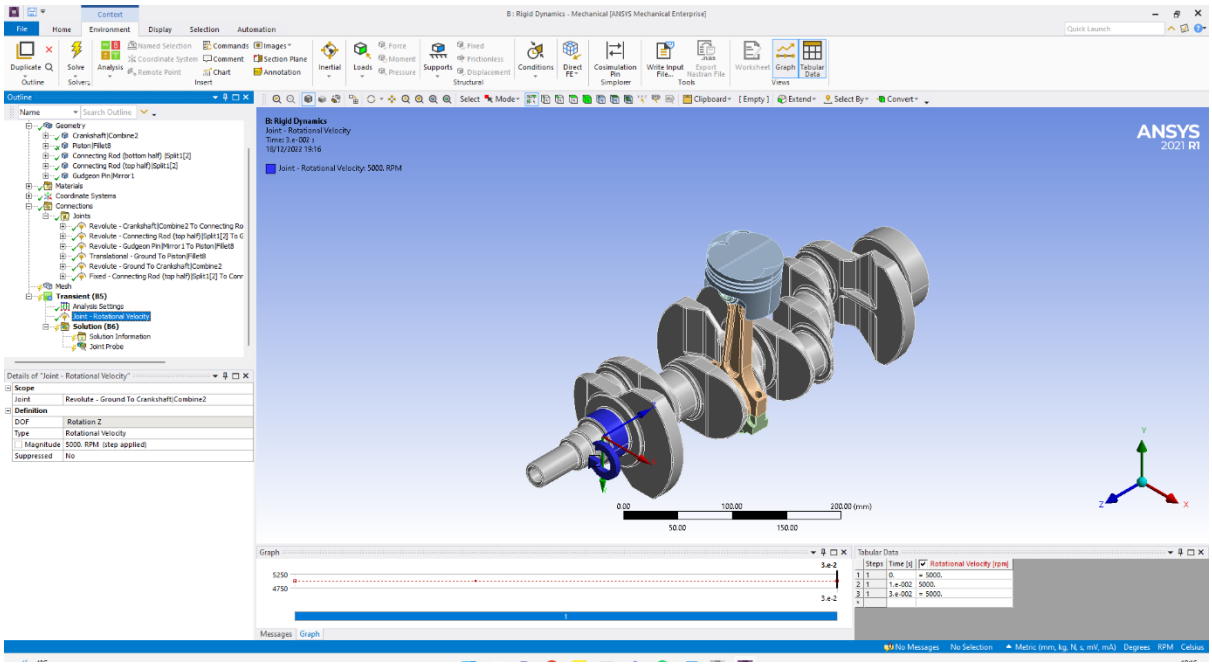

Figure 4 – 'Ansys Mechanical': screenshot of assembly showing rotational joint.

respective to each parts required path. The collection of body-to-body joints are built up in a manner as if the assembly is built from the ground up e.g., crankshaft is the reference contact body and the conrod bearing is the mobile body etc. Alongside body-to-body joints, a body-to-ground joint is applied to the main bearing surface which provides it the ability to revolve across the relevant axis which simulates the revolution of an engine assembly. A second body-to-ground joint is applied to the skirt of the position, though this is set to a translational joint, setting the boundary condition of an isolated motion across the original geometry's z axis.

Once all boundary conditions are allocated to the parts in simulation, a mesh size is required to be allocated to the geometry; despite it not having an affect on this study, it is still required throughout the analysis of any study. The analysis settings are now calibrated to match the required outputs. The rotational velocity is set to 5000rpm by dragging the body-to-ground joint

from the crankshaft into the transient folder of the project bar and setting the velocity within the 'rotational joint' bar, as seen in figure 4. As this study is recording the forces acting on the piston, from the gudgeon pin, the joint connecting these two parts is dragged down to the solutions menu. This creates a new output in labelled 'joint probe' which is a submenu containing the output data, subsequent to the allowing the system to solve the mathematical model.

Due to the velocity of the assembly, without altering running time, the desired output data would run at the systems default settings of 1 second; too long of a space as there would be numerous cycles performed in this time interval. Instead, the step end time is set to 0.03 seconds alongside changing the time step interval is set to .0001. Having an interval set so low allows more measurements to be taken across the allocated time duration.

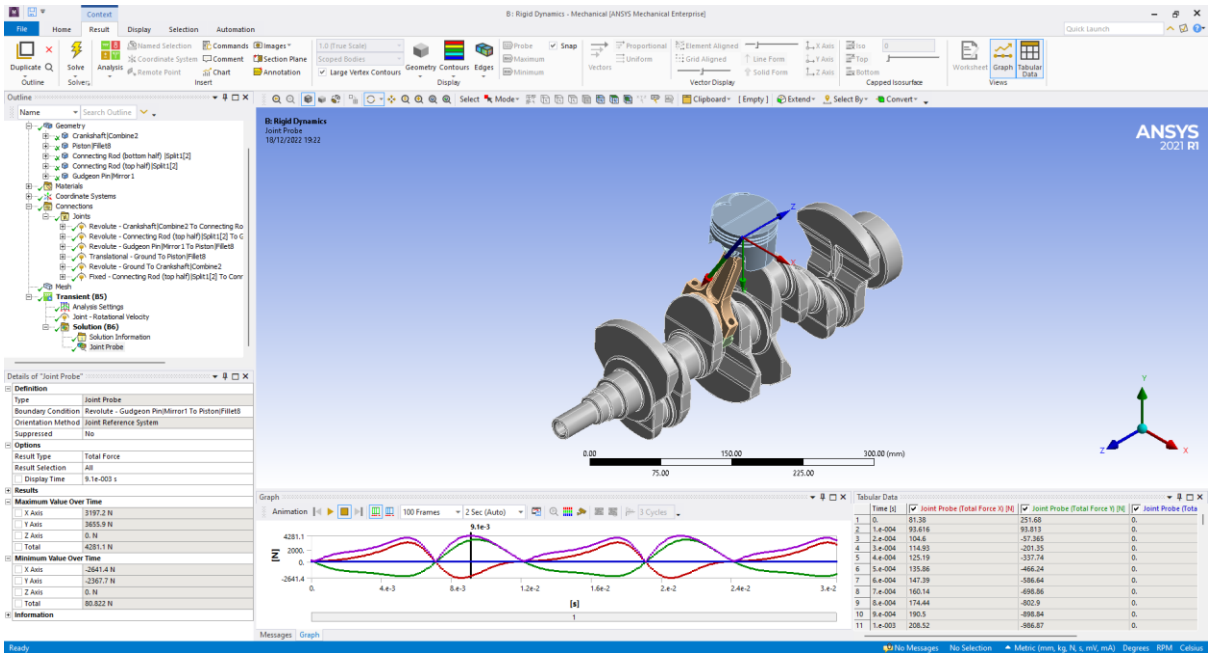

Figure 5- 'Ansys Mechanical': screenshot of rigid body forces.

Once solved, a graph will show the individual axes forces, as well as total forces, over the set duration; a table of these results are also shown to the right of the graph, showing results taken from each time step. The maximum total force can be found from the graph and/or filtering through the table. Right clicking the 'joint probe' tab will allow the result of the maximum load to be retrieved and highlighted within the joint probe's solution tab, however it needs to be exported so that it can be implemented later in the system for the final study.

3.2. Static Structural Study

3.2.1. Setup of System Linkage

The static structural study conducts a simulation on a select part from the assembly to measure one, or multiple, mechanically structural properties. As the piston is the product being analysed, the study was setup to analyse the total deformation and stress.

Initially, as the engineering data has been set, the static structural module can be dragged from the study menu and dropped onto the model tab. This allows all previous data, up to the modelling stage, to be transferred into this study. As the static structural study measures the mechanical stresses, elements from the geometry must be altered to accommodate. Within the geometry submenu, selecting the piston shows its properties, of which the structure is changed from rigid to flexible, to allow the deformation to be shown. Ensuring the material is still set to 6061-T6 is a valid precautionary measure.

As parameters have been altered here, the motion loads from the initial study are now imported back in, via the static structural folder, so the mathematical model can factor in these results for the final study. Though as this study isn't conducted until the steady-state thermal study, no further action is required until that study has been conducted. Once the study is done however, this test requires a minimal setup before solving the maths.

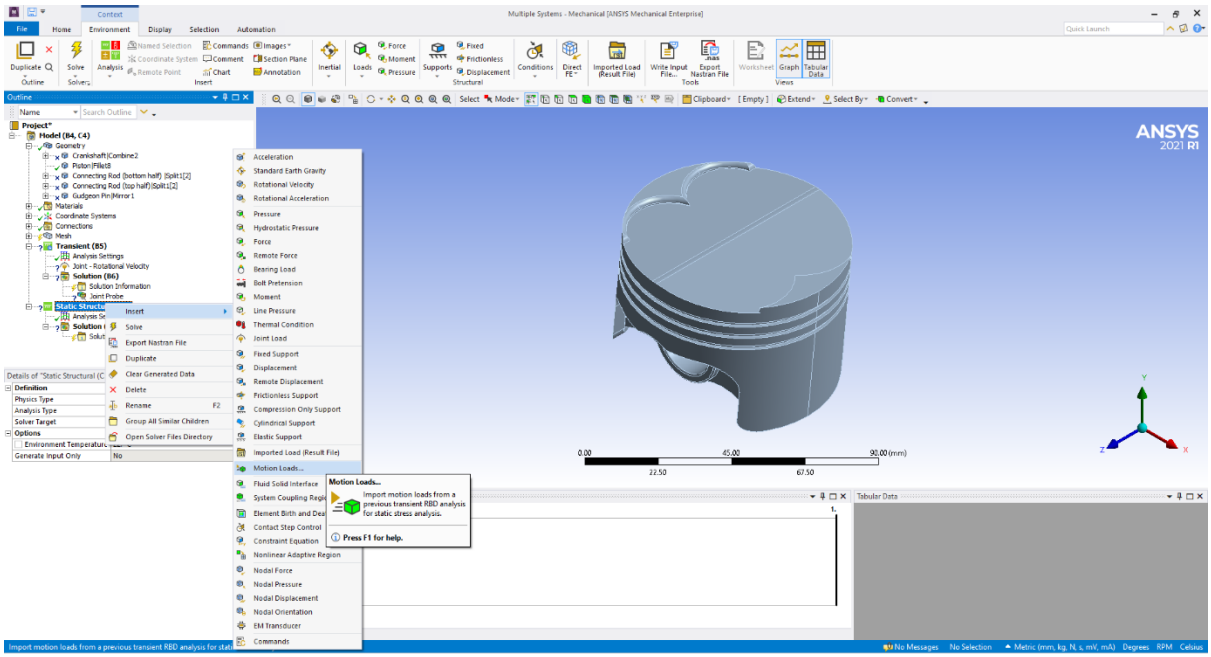

Figure 6 – 'Ansys Mechanical': screenshot of importing motion loads

Mesh sizing is kept at the same size as the other two studies to maintain accuracy and keep identical variables throughout: 2mm mesh across the whole body and 1mm on the piston crown.

As the body has been isolated and set to be flexible, more boundary conditions are required before calculating any forces. To keep the piston from moving positions due to applied forces, a weak spring parameter is applied to the total body. This parameter places an infinite number of springs, located on every surface of the body, with a miniscule force resulting in the body maintaining its position whilst not having a structural impact from the springs.

After ensuring the piston has the appropriate constraints, a pressure of 105bar was loaded onto the piston's crown to simulate the combustion process, thus finalising the static structural study. The pressure application can be found in the top bar of the environmental tab, see figure 6, and once selected the user is prompted to allocate the parts of the body/bodies that pressure is required. To obtain the output data, the required output must be selected and moved into the solution folder in the project tree: this study is focusing on the total deformation and stress.

3.3. Steady-State Thermal Study

3.3.1. System Linkage

Back on the project page on Workbench, the thermal study can be dragged into the project page as a standalone system underneath the static structural study. The engineering data and geometry from the static structural study are dropped into the thermal study's modules and the modelling can be reconstructed for the new study. Opening the model for the thermal study will still show the whole assembly, however the only relevant part wanted is the piston as the thermal convection is analysed, while parameters are added, simulating the thermal element of the combustion process.

Initially, within the geometry folder, the piston can be right clicked and the option to suppress all other bodies is selected. This removes the irrelevant bodies from the study, without compromising the previous study, rather than deleting the unnecessary parts. While the piston is isolated, the material should be checked to ensure it is correct prior to solving as the system can occasionally revert it to default without the user being aware.

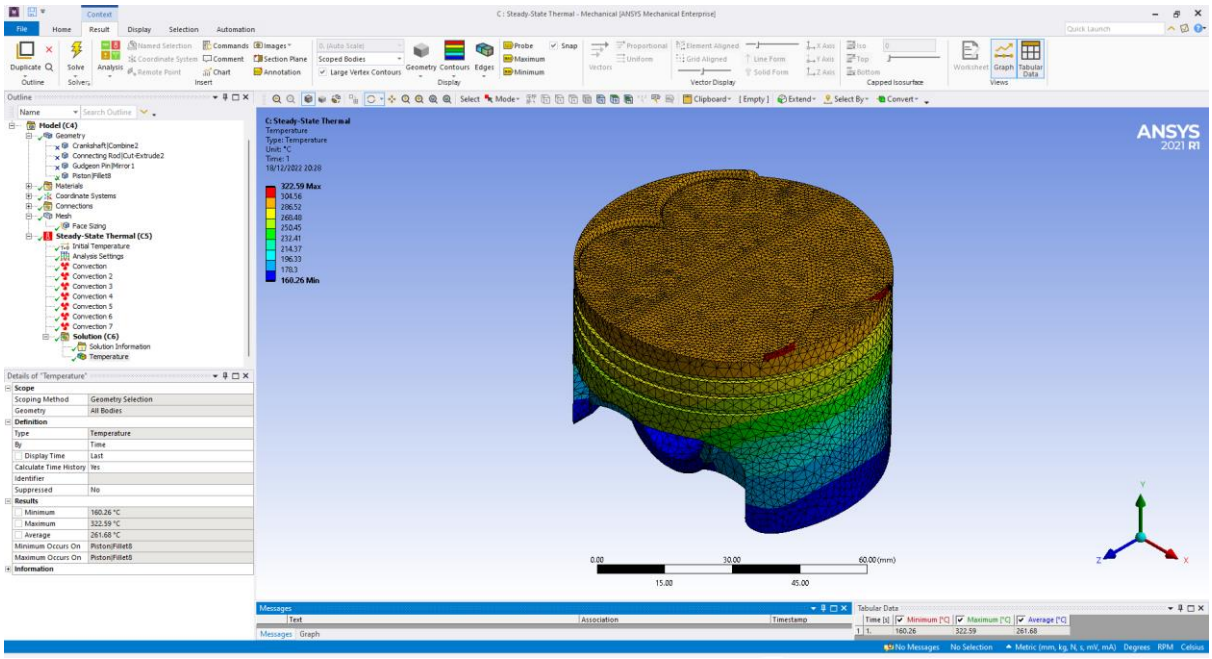

Figure 7 - 'Ansys Mechanical': screenshot of steady-state thermal study.

With the piston isolated, the several convection factors can be placed in the steady-state thermal folder, refer to figure 7. These act independently to each other and have independent properties to one another, refer to References - figure 1.

3.4. Meshing Validation

To further validate the accuracy of Ansys' systems and analyse the results dependency on mesh sizing, multiple mesh sizes were tested during the thermal study to identify the differences in results (FEAtips.com, 2022): mesh sizes were tested between 0.25mm and 2mm. The output data revealed that there was only a 1.45˚C, refer to figures 8, difference between the smallest and largest mesh densities used. Inherent issues involved not being able to use mesh sizes of 5mm and larger, however this shouldn't impact this part during testing as the mesh size relative to the part would be too large.

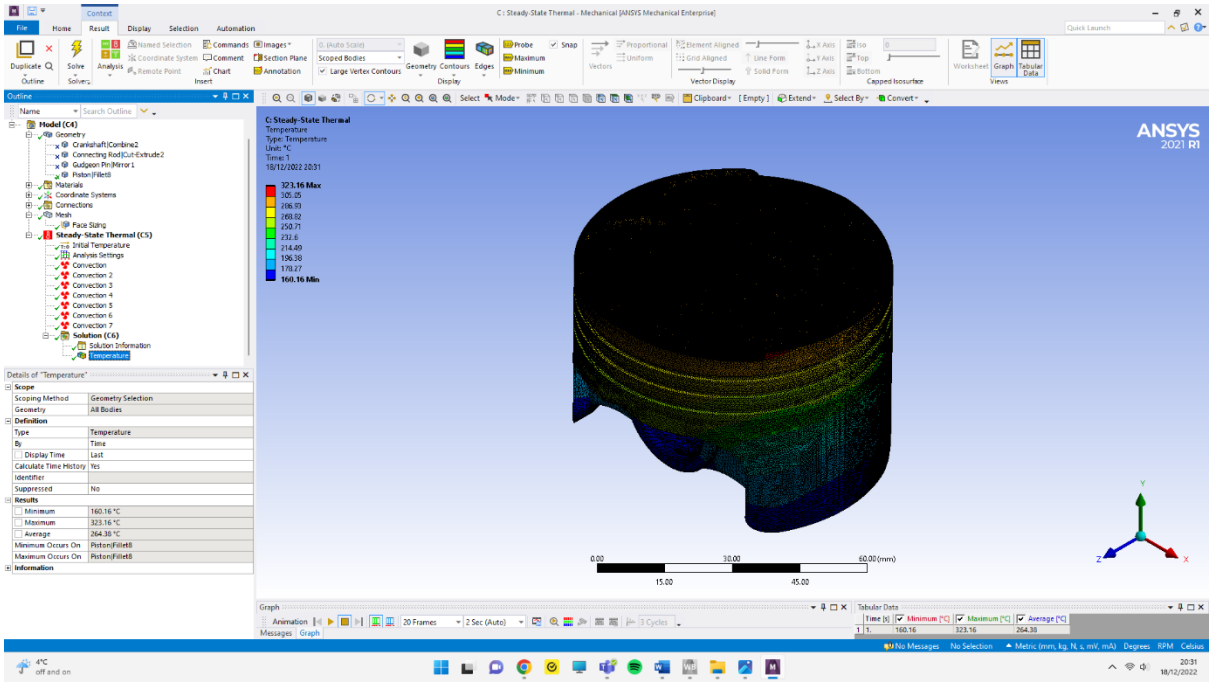

Figure 8 - 'Ansys Mechanical': screenshot of meshing dependence study

4. Analysis of Results

4.1 Initial Design

Results of the initial design study are shown below. The main inherent flaw of the piston's design is where the valve cut-out hasn't been given a filleted edge on the inside of the groove. As seen in figure 9, the edges of the cut-out contain the maximum deformation at 0.018m, or 18mm, which is far from ideal for any piston design.

The non-filleted valve cut-outs repeatedly show they are an inherently weak design as, during the simulated combustion phase, they pose to be the hottest part of the piston; refer to figure 10. This can likely be resolved by smoothing out the surface, in consideration to the direction of the flame front.

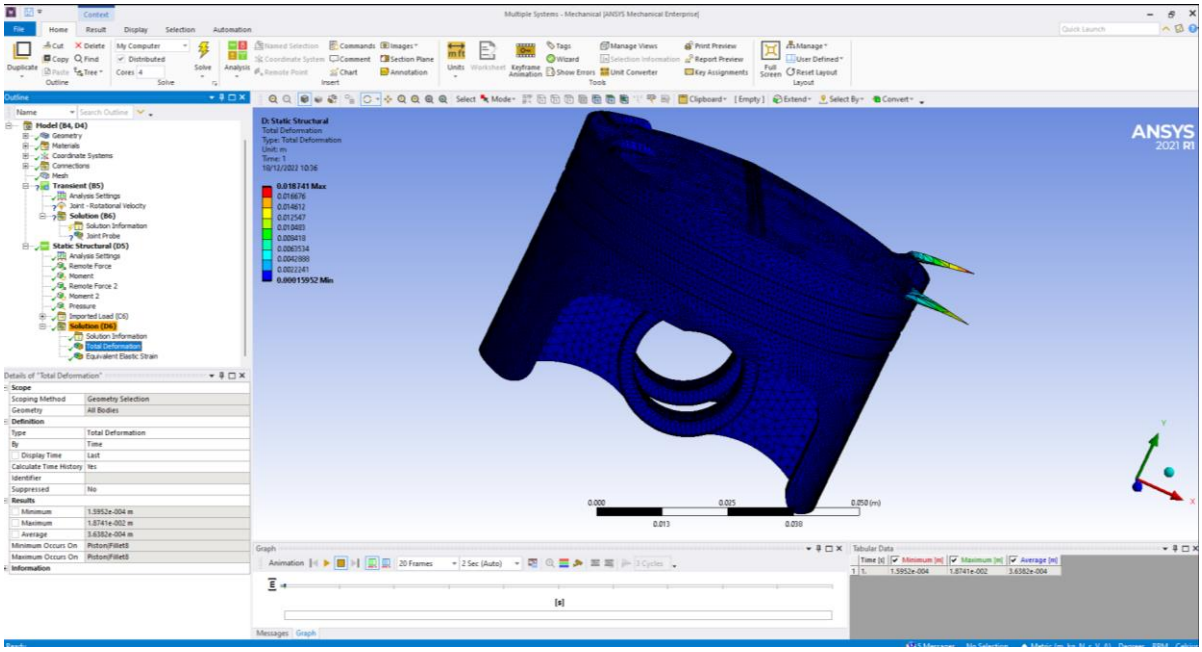

Figure 9 - 'Ansys Mechanical': screenshot of deformation results

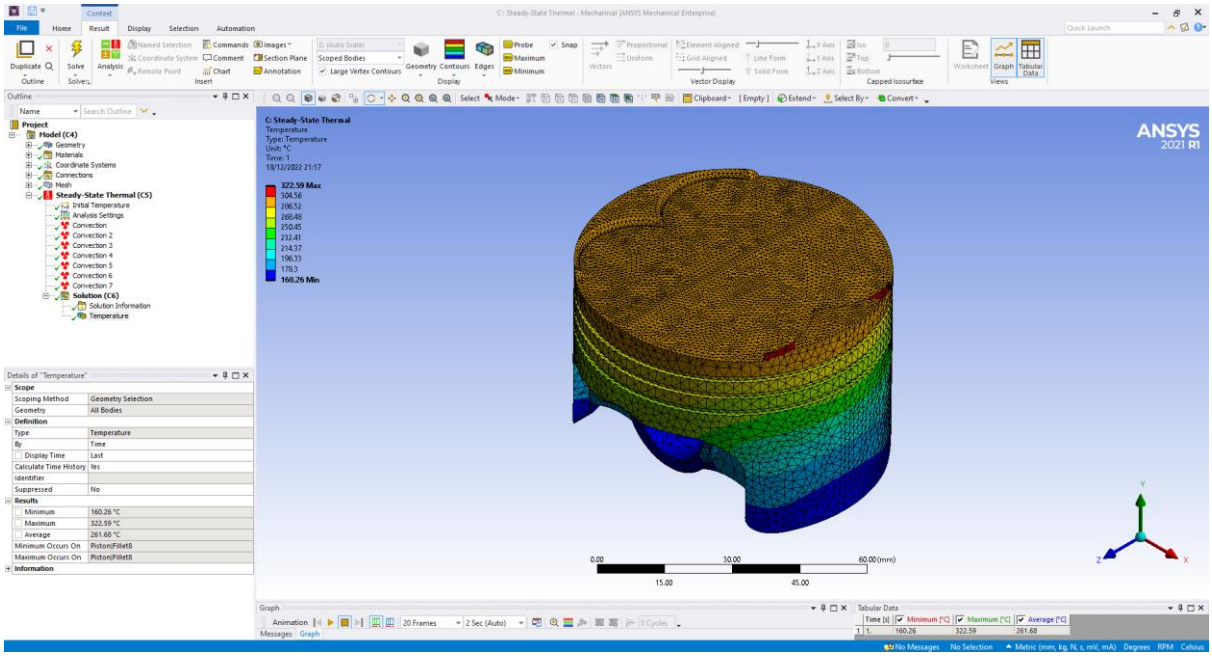

Figure 10 - 'Ansys Mechanical': screenshot of thermal results

4.2. Iterative Design

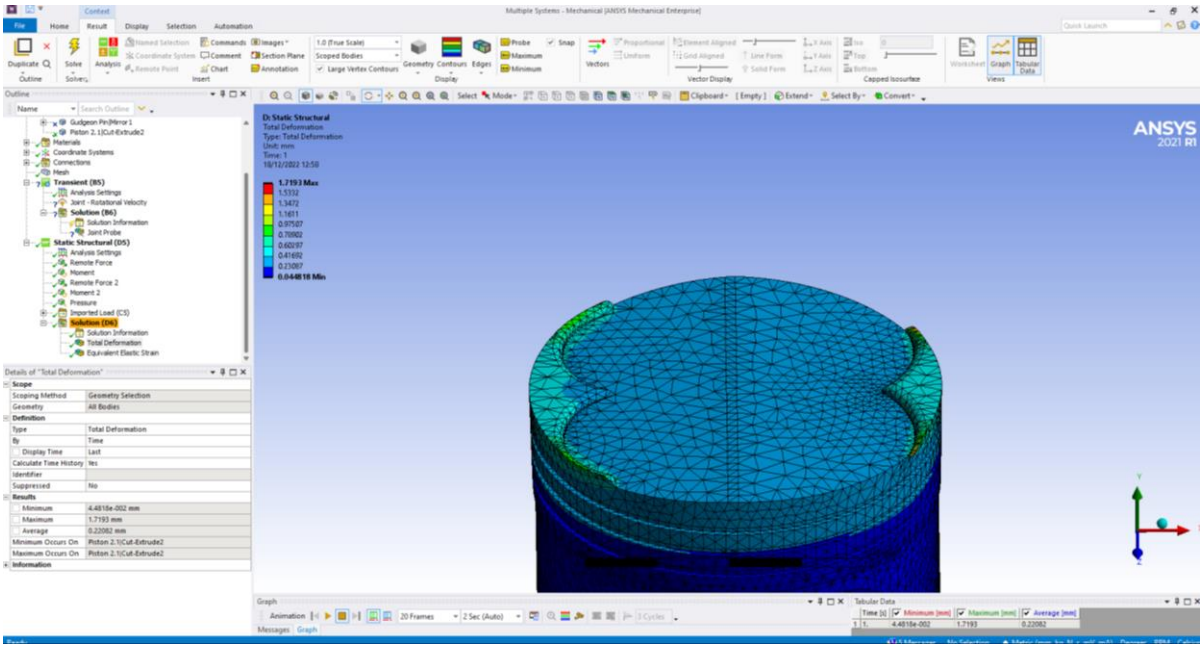

Figure 11 - 'Ansys Mechanical': screenshot of deformation results on updated piston design

The updated design of the piston merely consisted of marginally thinner skirting, filleted edges on the valve cut-out and a change in material properties. The filleted edges were included in attempt of relieving load from the side of the cut-out when under pressure: after resolving the study with the updated geometry and identical parameters, the fillets appear to have relieved a

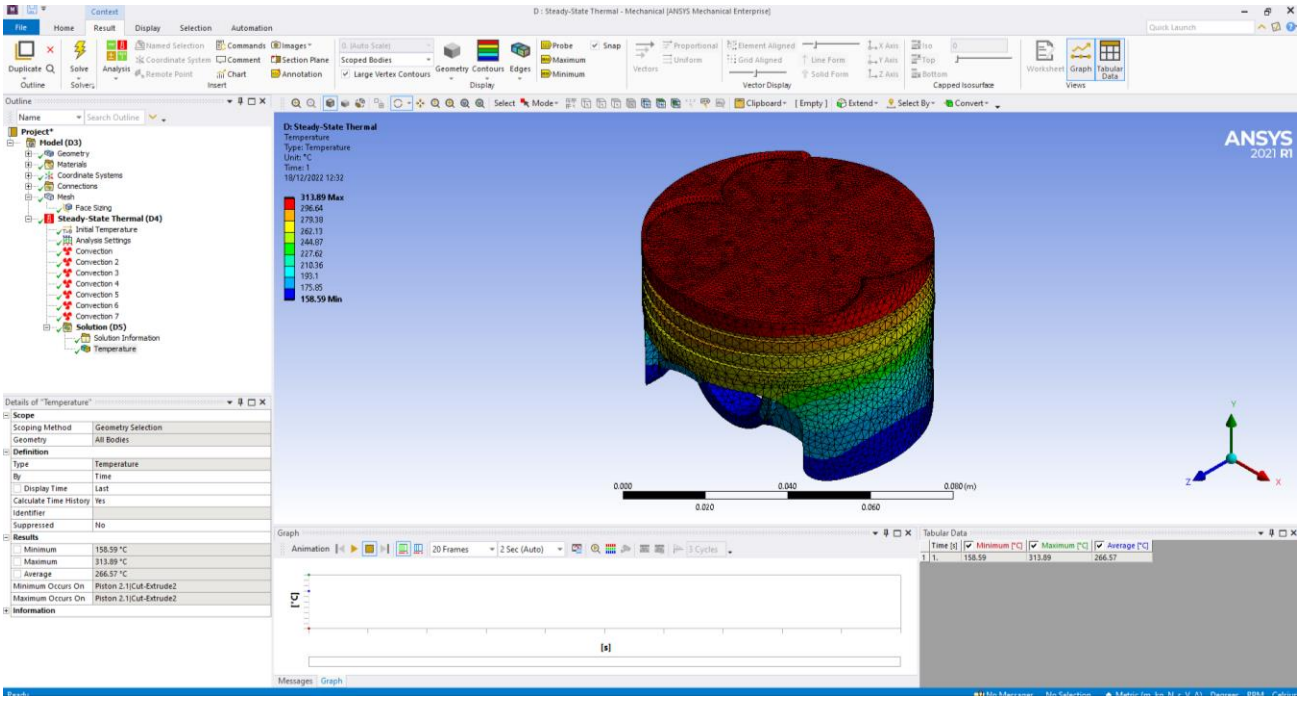

Figure 12 -'Ansys Mechanical': screenshot of thermal results on updated piston

lot of stress from the edges of the raised lip, though not designed completely to eliminate the deformation occurring.

The material choice would have a slight impact on the strength as the Young's Modulus was rated at 70-80GPa(Wixsteel, 2022), though unfortunately there was no temperature dependent map to show variance of the strength loss through heat. Due to the Young's Modulus value not having a specific value at ambient temperature the median of the values was utilised. The 4032 alloy was used, opposed to the 2618, as it has a high silicon content and lower wear degradation (MotorTrend, 2008) resulting in a longer lasting piston: ideal for most applications. However, A390-T5 (Carvalheira et Gonçalves, 2006) could be utilised as an alternate alloy could be used to reduce heat differences further or improve strength.

5. System Usage

5.1 Limitations

Although the Ansys system is a highly developed program, it contains inherent issues, especially when linking multi-body systems. The only problematic issue found during the study was at the final solutions stage; it seemed that the solution kept getting stuck at 10% while solving the mathematical model, displaying multiple error messages describing issues with multiple 'multi-body contact points'. Initially, it was believed that the modelling had been conducted incorrectly, however it was found that if the computer is left for long enough (45 minutes as opposed to the 15 minutes before the problem was resolved) then it will solve the problem.

References

1) Dlubal (2022) Elastic Bending – Continuous Loading. Available at: https://www.dlubal.com/en/downloads-and-information/examples-and-tutorials/verification-examples/000016 (Accessed 12 December 2022)
2) FEAtips (2022) *How to verify mesh quality in Ansys Workbench*. Available at: https://featips.com/2021/05/07/how-to-verify-mesh-quality-in-ansys-workbench/ (Accessed: December 16, 2022).
3) Wix Steel (2022) *4032 Aluminium Alloy Bar*, Available at: https://www.wixsteel.com/products/aluminum-alloy/4000-series-aluminum-alloy/4032#:~:text=4032%20aluminum%20alloy%20has%20a,known%20for%20strong%20corrosion%20resistance. (Accessed December 16, 2022)
4) MotorTrend (2008) Which Aluminum Forged Piston Is Right For Your Engine? Available at: https://www.motortrend.com/how-to/hrdp-0810w-mahle-piston-alloy-comparison/ (Accessed December 16, 2022)
5) Carvalheira, P. Gonçalves, P. 2006, FEA of Two Engine Pistons Made of Aluminium Cast Alloy A390 and Ductile Iron 65-64-1 Under Service Conditions, Departamento de Engenharia Mecânica, Faculdade de Ciências e Tecnologia da Universidade Coimbra, Portugal

Figures

Thermal Study Boundary Conditions

	Heat Transfer Coefficient					Temperature (Celcius)				
	1	2	3	4	Average	1	2	3	4	Average
Crown	600	350	500	540	**497.5**		928.5			**928.5**
Crown Side	500	540	350	400	**447.5**	250	650	500	300	**425**
Top Groove	300	650	200	600	**437.5**	180	150	180	250	**190**
Middle Groove	300	650	200	600	**437.5**	180	150	180	250	**190**
Oil Groove	260	520	175	400	**338.75**	165	150	170	170	**163.75**
Underside	1500	750	250	200	**675**	95	90	90	90	**91.25**
Skirt	1000	400	150	300	**462.5**	110	110	120	90	**107.5**

Structural Study Boundary Conditions

	Pressure	Inertia	Side
Max P	10537060	11371.29	7440.469
Max I	304222.2	18089.83	-1.10E-12
Max S	8907806	6954.198	8707.43

6061-T6 Aluminium Material Properties

	Young's Modulus	
Temp (°C)	Value	Unit
22	67	Gpa
100	70	Gpa
150	68	Gpa
200	64	Gpa
250	56	Gpa
300	48	Gpa
350	41	Gpa
400	32	Gpa
450	21	Gpa
500	12	Gpa

Poisson's Ratio	0.33	
Coefficient Thermal Expansion 22°C	2.36E-05	1/°C
Thermal Conductivity	167	W/m-K
Specific Heat Capacity	0.896	J/g-°C

Figure 1 – (Noble, 2022) – class handout of material specification and heat transfer values