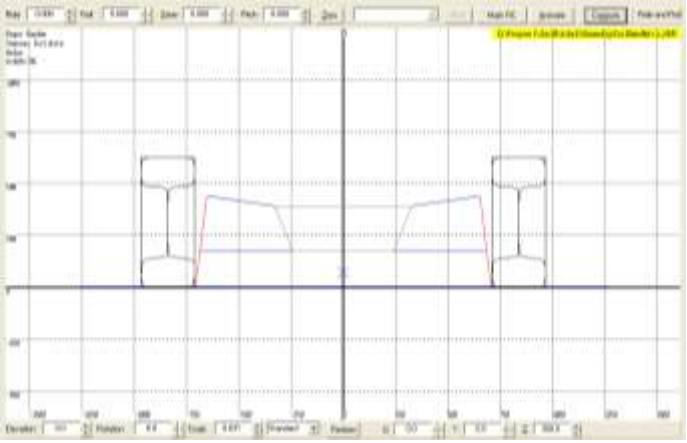

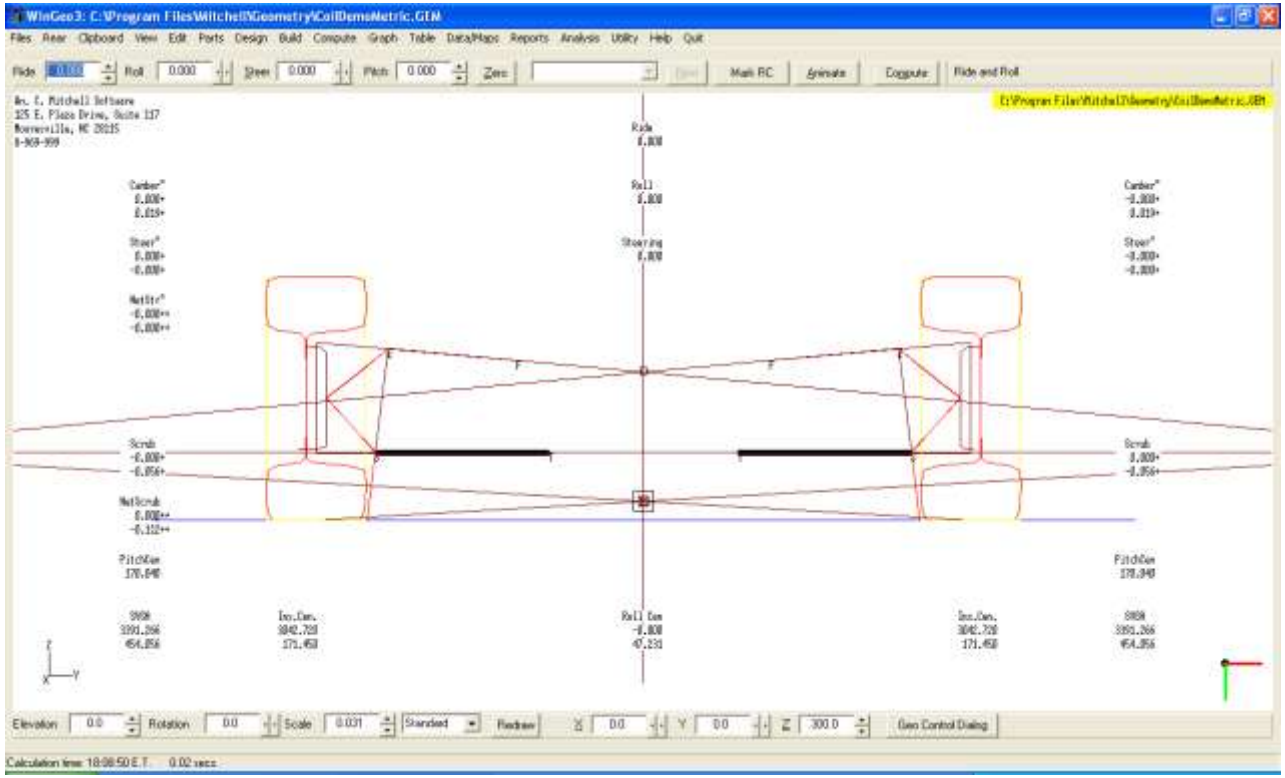
WinGeo3: C:\Program Files\Mitchell\Geometry\CoilDemoMetric.GEM
Files Rear Clipboard View Edit Ports Design Build Compute Graph Table Data/Maps Reports Analysis Utility Help Quit
Ride
Roll
Steer
Pitch
Zero
Math RC
Animate
Cogpute
Ride and Roll
Ride
Roll
Steering
Camber
Steer
Scrub
PitchCen
Roll Cen
Elevation
Rotation
Scale
Standard
Redraw
Geo Control Dialog
Calculation time: 18:08:50 E.T. 0.02 secs.

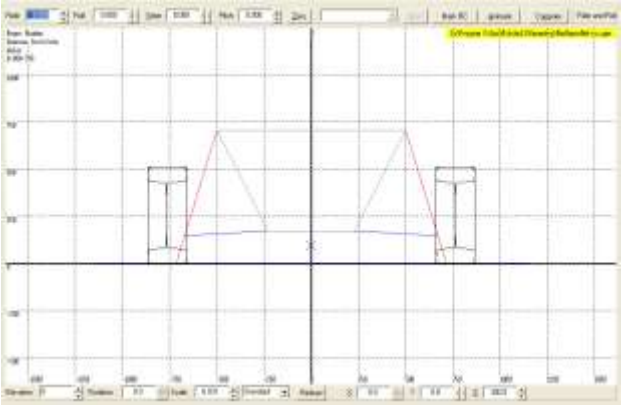

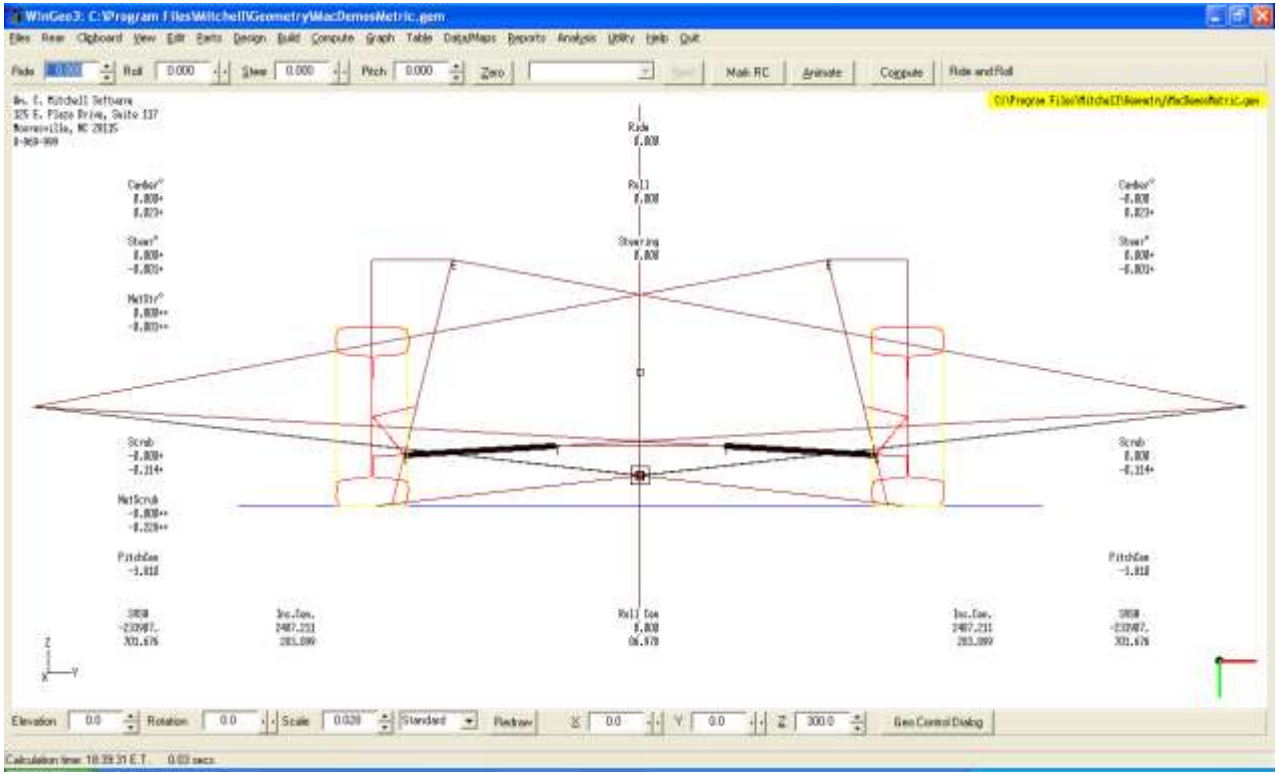
WinGeo3: C:\Program Files\Mitchell\Geometry\MacDemosMetric.gem
Files Read Clipboard View Edit Parts Design Build Compute Graph Table DataMaps Reports Analysis Utility Help Quit
Ride 0.000
Roll 0.000
Steer 0.000
Pitch 0.000
Zero
Mark RC
Animate
Compute
Ride and Roll
Ride
Roll
Steering
Camber
Steer
Scrub
PitchCen
Elevation 0.0
Rotation 0.0
Scale 0.020
Standard
Redraw
X 0.0
Y 0.0
Z 300.0
Geo Control Dialog

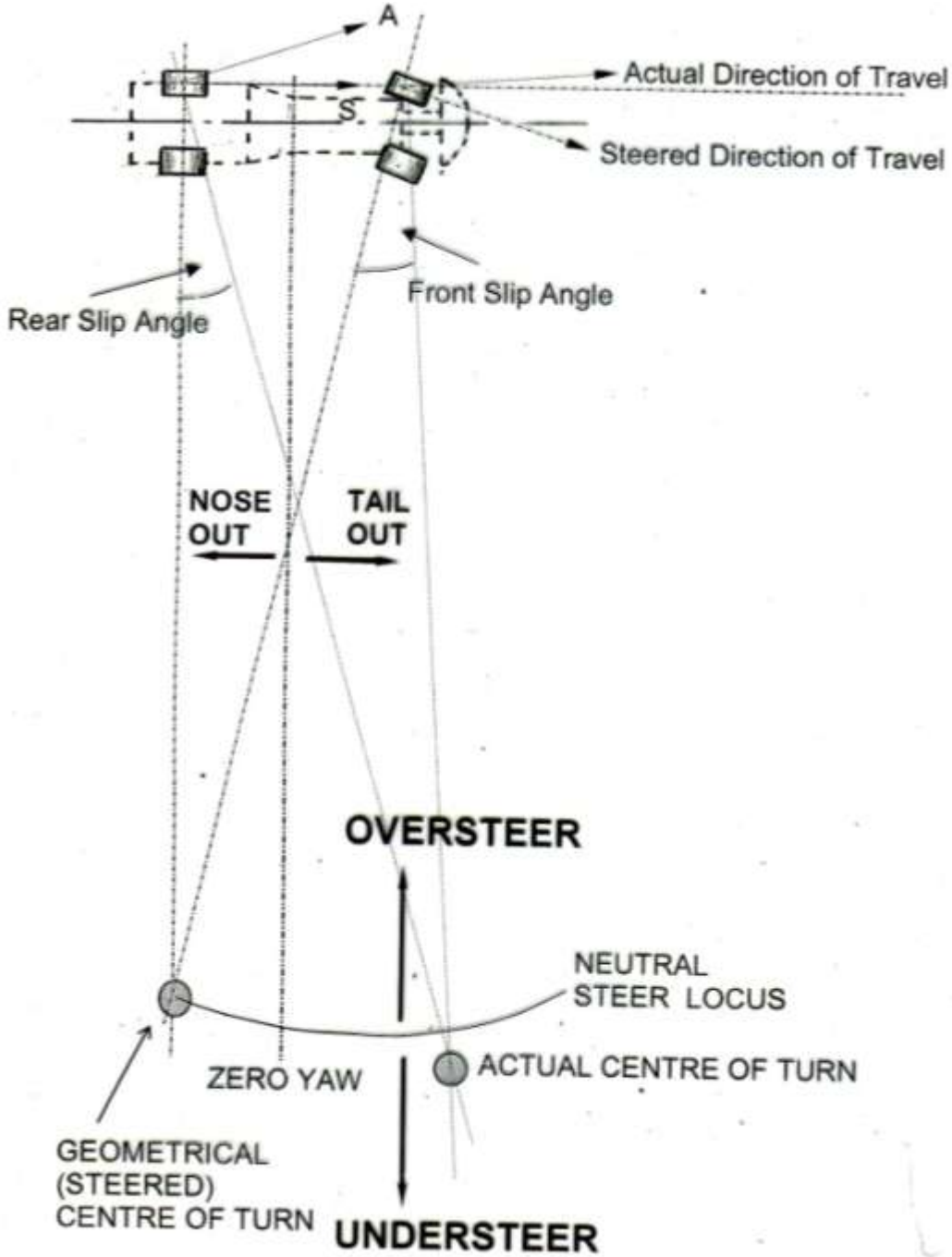
A
Actual Direction of Travel
S
Steered Direction of Travel
Front Slip Angle
Rear Slip Angle
NOSE OUT
TAIL OUT
OVERSTEER
NEUTRAL STEER LOCUS
ZERO YAW
ACTUAL CENTRE OF TURN
GEOMETRICAL (STEERED) CENTRE OF TURN
UNDERSTEER

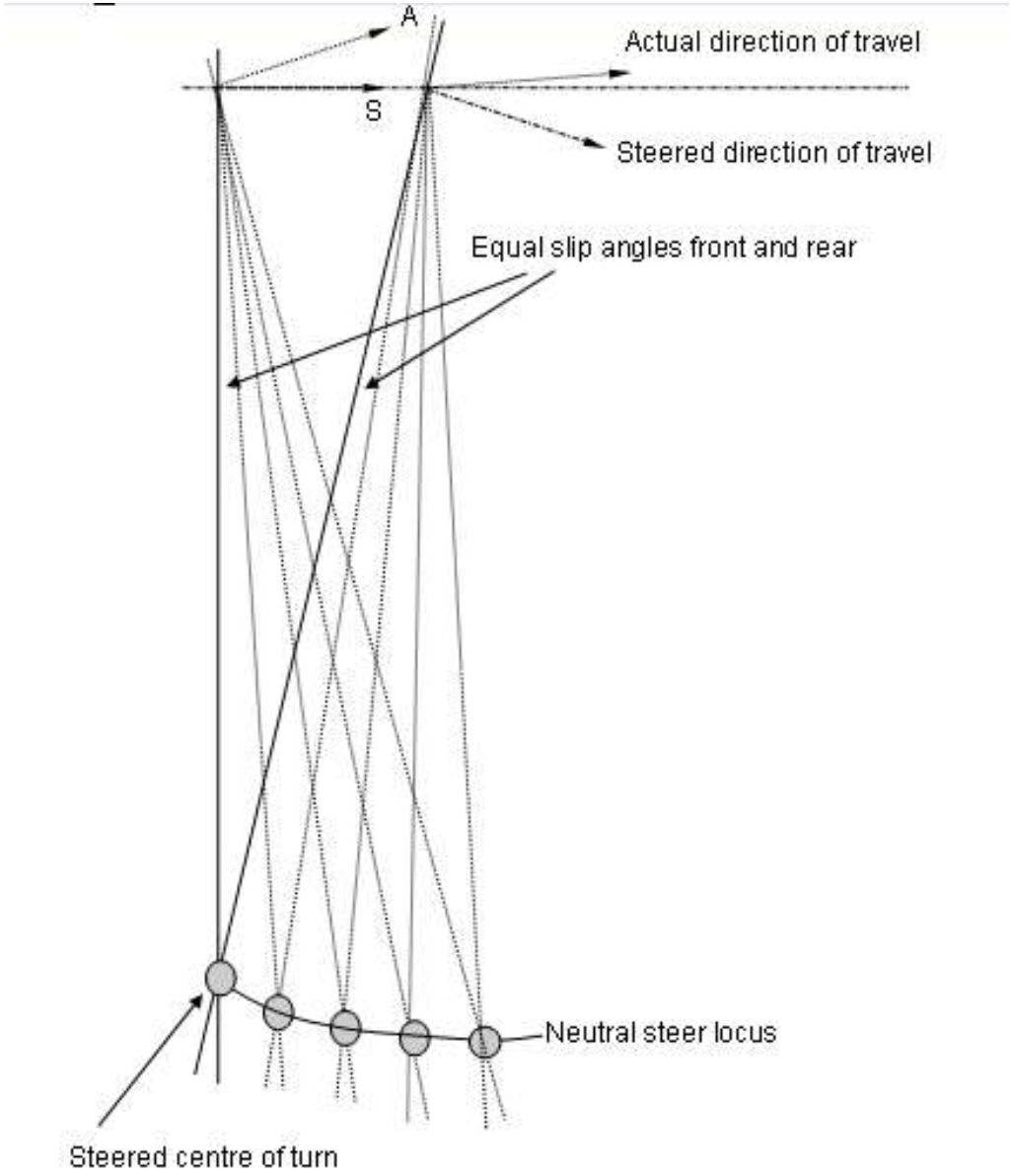
A
Actual direction of travel
S
Steered direction of travel
Equal slip angles front and rear
Neutral steer locus
Steered centre of turn

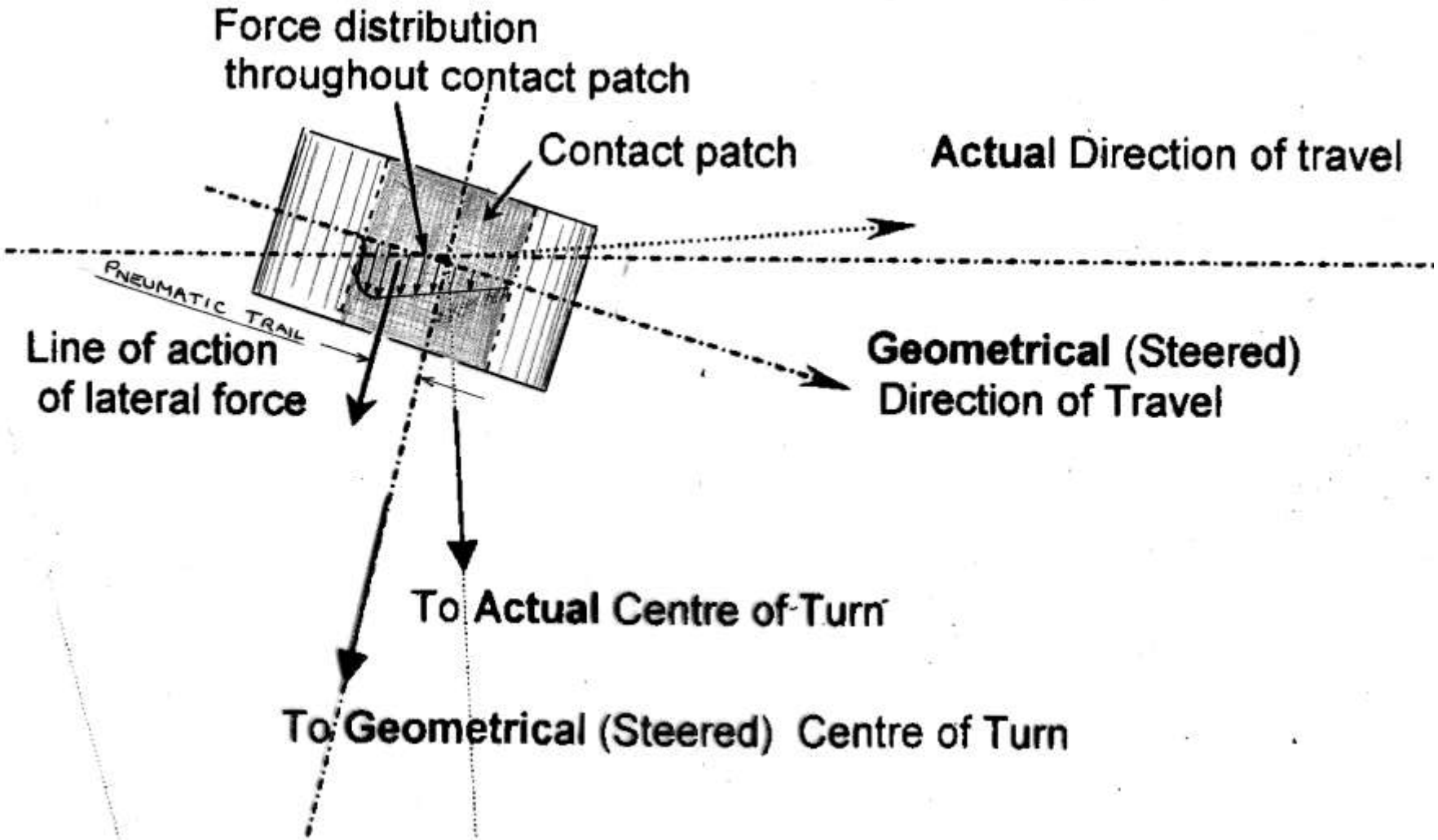
Force distribution
throughout contact patch
Contact patch
Actual Direction of travel
PNEUMATIC TRAIL
Line of action
of lateral force
Geometrical (Steered)
Direction of Travel
To Actual Centre of Turn
To Geometrical (Steered) Centre of Turn

**Question 3** **Suspension Behaviour**

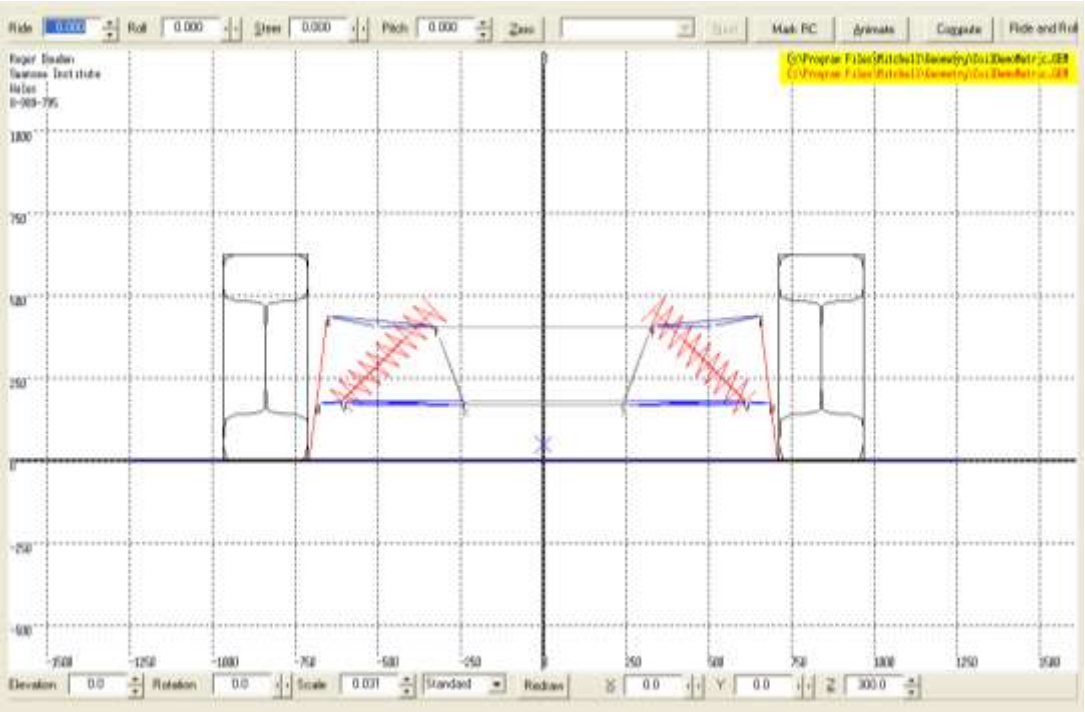


In the schematic of the suspension shown above:-

SL

C-V = 312 mm

C-B = 362 mm

The spring is inclined at 45 $^{0}$ to the vertical

Ks The spring rate is 70 000 N/m (70 N/mm)

Kt Tyre rate is 256 000 N/m ( 256 N/mm)

The total corner mass is 200 kg

The unsprung mass is 30 kg

Find :

a) The suspension leverage

b) The natural frequency of the unsprung mass

c) The natural frequency of the sprung mass

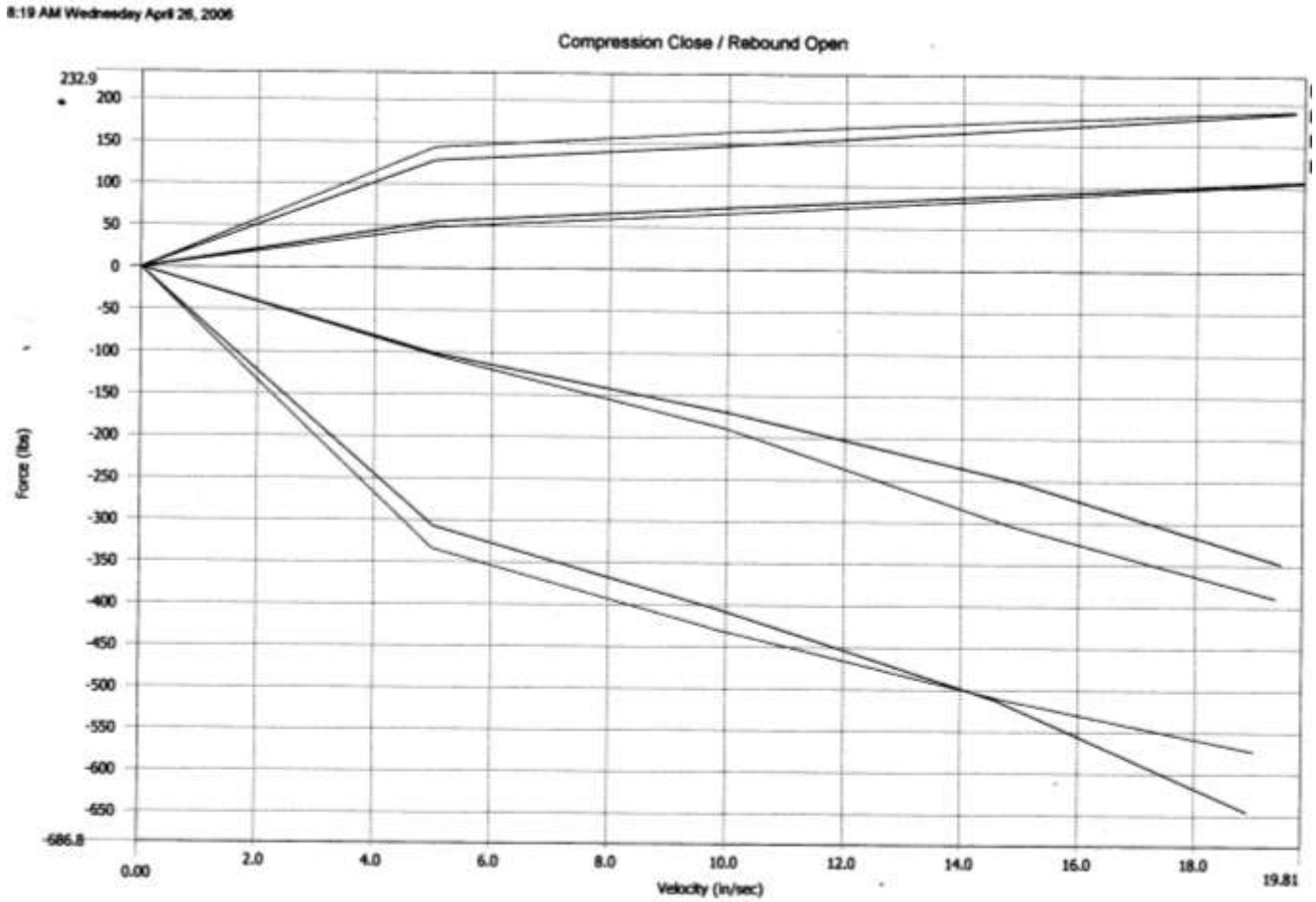


Low Speed – Bleed holes in piston
High Speed - Spring or shim controlled orifice in piston
Low speed damping controls roll and pitch of sprung mass