PRIFYSGOL CYMRU
Y Drindod Dewi Sant
UNIVERSITY OF WALES
Trinity Saint David

UNIVERSITY OF WEST LONDON
The Career University

UWTSD Research Seminar

Dr Nagham Saeed

Senior Lecturer in Electrical Engineering
School of Computing and Engineering

Email: Nagham.Saeed@uwl.ac.uk

SENLOCDA

Presentation layout

- About UWL
- WinSTEM group and WiEEE society
- SENLOCDA Research Group.
- My research background
- My current research
- My research interests.

About UWL

The University of West London is ranked as the **top modern university* in London**, **8th modern university* in the UK** and ranked as the **50th university nationally by the Guardian University Guide 2019**.

98% of our graduates are in employment or further study within six months of graduation** and they achieve the second highest starting salaries of all the London modern universities.

St. Mary Campus

Modern universities are defined as higher education institutions that were granted university status in, and subsequent to, 1992. UWL received the rankings listed above when compared to all other modern universities ranked in the guides / surveys cited.

**** These are the latest figures according to Employment Performance Indicators (EPI) released by the Higher Education Statistics Agency HESA in 2018.**

St. Mary Campus
Heart Space

WinSTEM Group

WInSTEM is a group of academics in the School of Computing and Engineering at UWL. We have a passion for encouraging women and girls to pursue careers in Science, Technology, Engineering and Mathematics (STEM), and particularly our own specialist areas of engineering and technology.

Taking inspiring WinSTEM message into local schools and Colleges

UNIVERSITY OF WEST LONDON
The Career University

UWL Women in Electrical/ Electronic Engineering

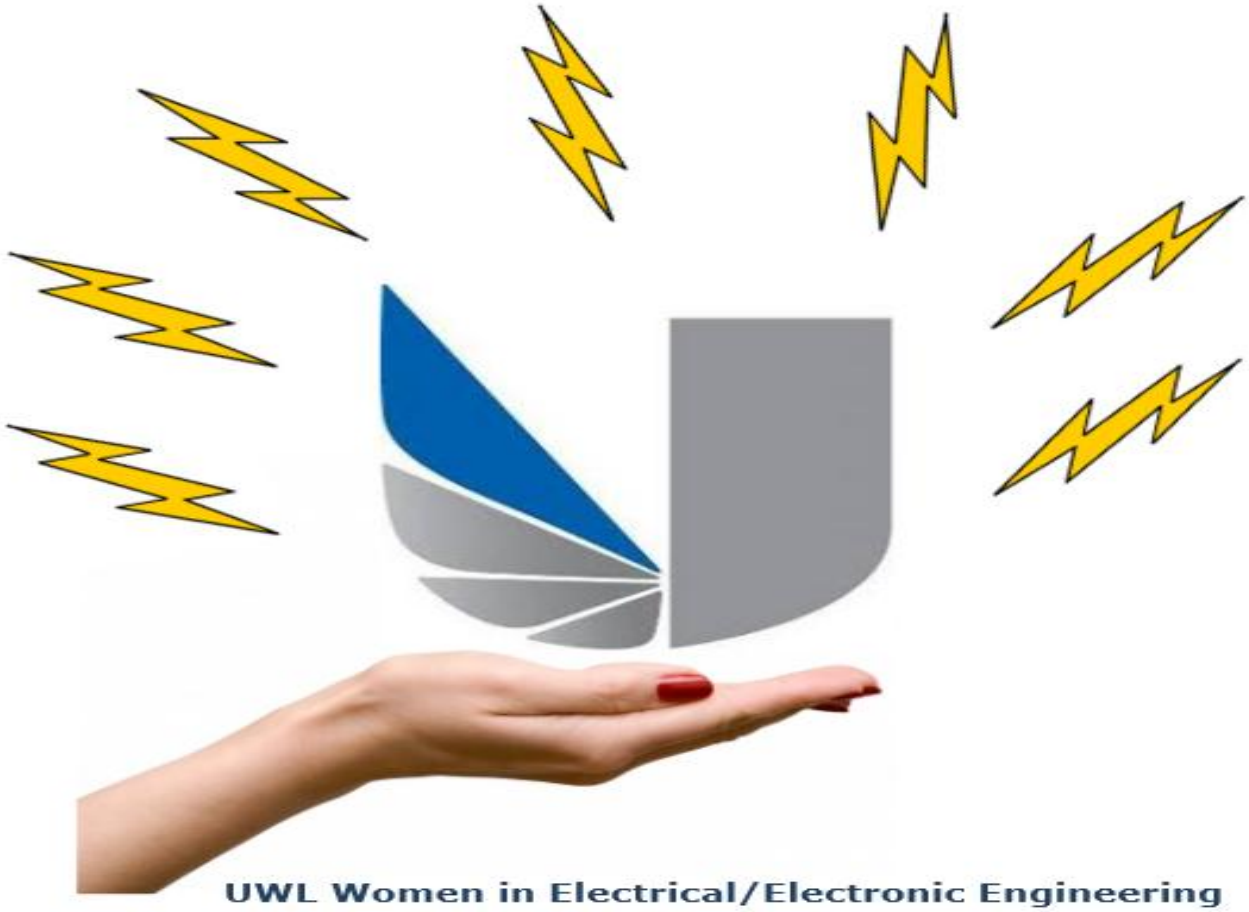

SENLOCDA Research Group

Aim

Sensing, Localisation & Contextual Data Analytics for Smart Industrial Services

SENLOCDA for Smart Industrial Services

SENLOCDA research group members

UNIVERSITY OF WEST LONDON
The Career University

Professor Xinheng (Henry) Wang
Professor of **Computing**

Dr Wei Jie
Associate Professor in **Computing**

Dr Massoud Zolgharni
Senior Lecturer in **Computer Vision**

Dr Kourosh Behzadian
Senior Lecturer in **Civil Engineering**

Dr Nagham Saeed
Senior Lecturer in **Electrical Engineering**

Dr Ying Zhang
Senior Lecturer in **Computer Science**

Dr Chekfoung Tan
Lecturer in **Applied Project Management**

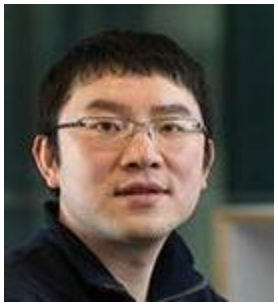

Dr Liang Chen
Lecturer in **Cyber Security**

Smart Trolley by Henry Wang

Smart trolley is an **integrated platform** to provide smart services to passengers and airport operators. Its services are supported by following underlying technologies: indoor localisation and navigation, IoT, cloud computing, big data analytics, artificial intelligence, and batch charging of the trolleys.

Service provided

- **Indoor positioning**
- **Entertainment programmes**
- **Boarding reminder**
- **Charging mobile devices**
- **Shopping**

Smart Trolley in Airport

Smart Trolley in Action

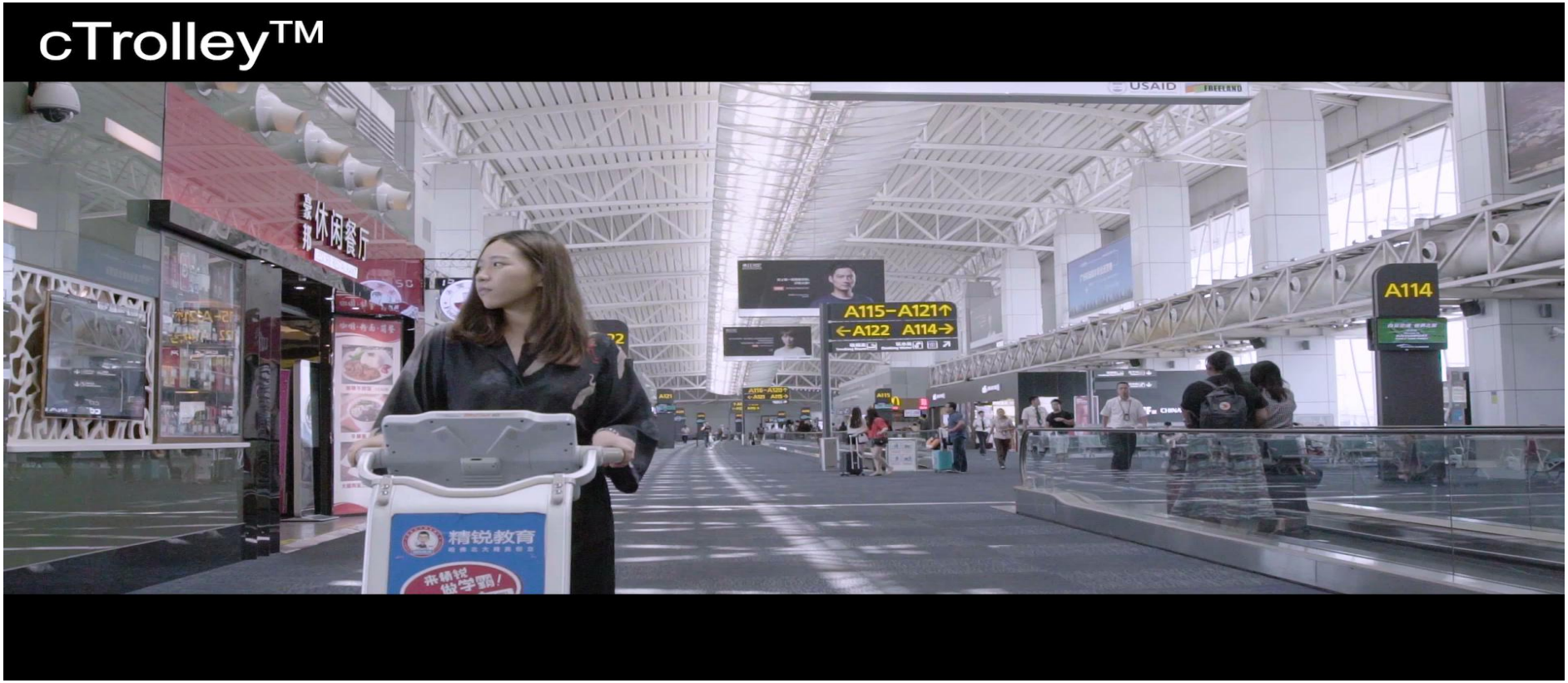

Smart Trolley's Underlying Technologies: **Cloud, IoT and LBS**

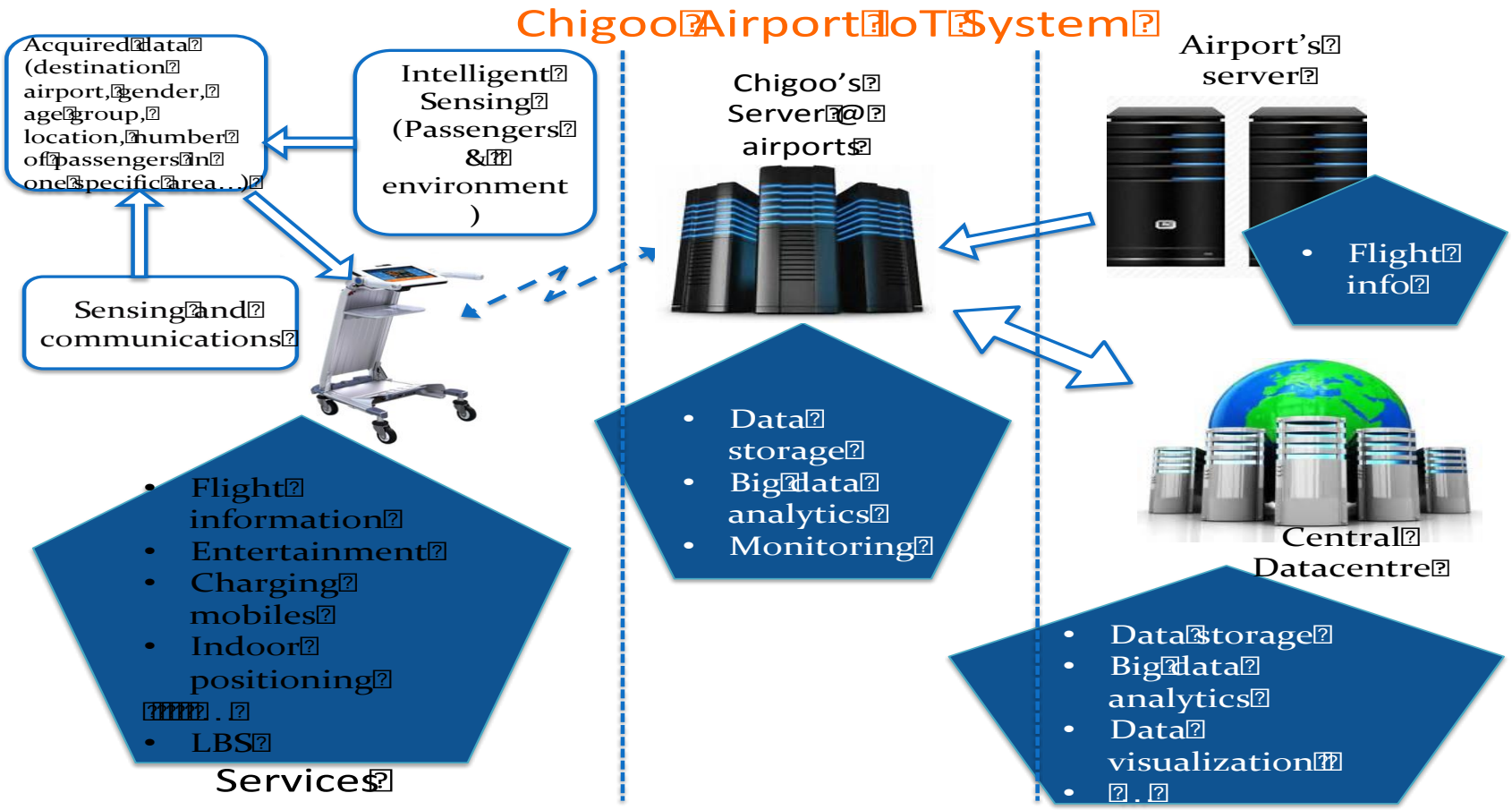

Research Background –IMAN

Motivations :

- Achieved **better communication** with Mobile Ad Hoc Network.
- Analyse MANET routing protocols **performance in different contexts**
  - **No** optimum routing protocol can handle all expected network contexts changes without the network performance been degraded.
  - Each identified routing protocol **addresses the objectives** of its development.
  - During a MANET life cycle, only **one routing protocol** can be utilised.

Main Research Aim :

- Study the **communication challenges** in Mobile Ad Hoc Network (MANET) .
- **Design and Simulate** an adaptive system that learns from past experiences. Intelligent MANET Routing Protocols Optimization System that selects the most optimum routing protocol based on current network context.

IMAN
(Intelligent Mobile Ad Hoc Network)

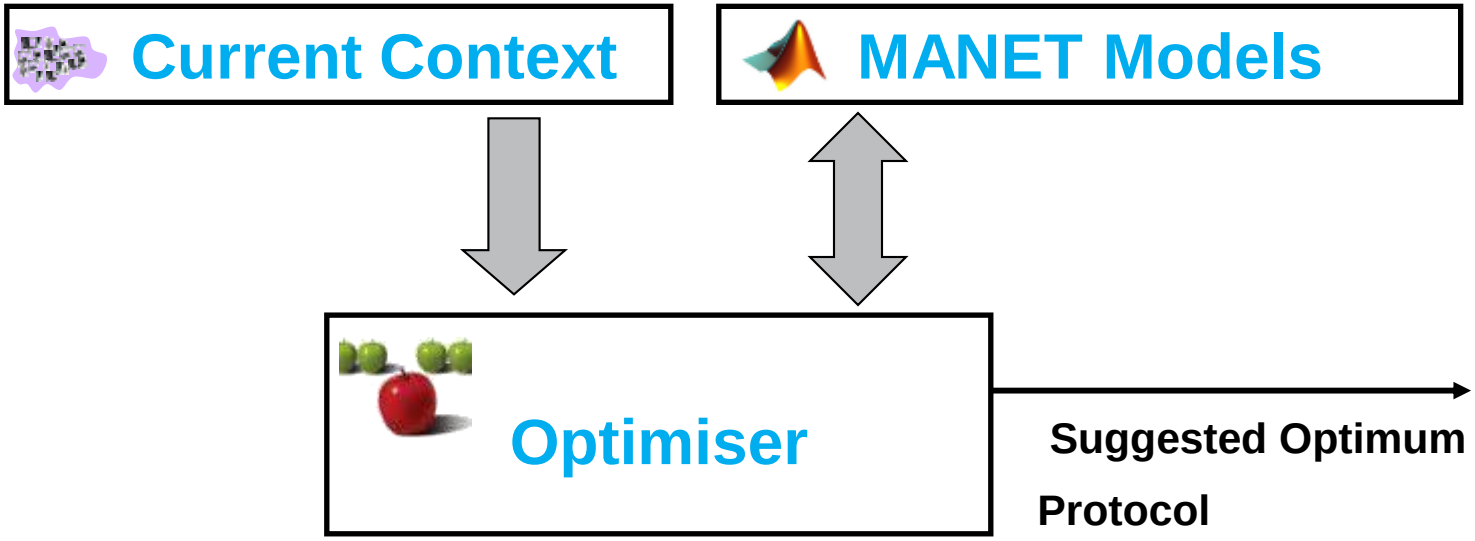

Intelligent Node in MANET

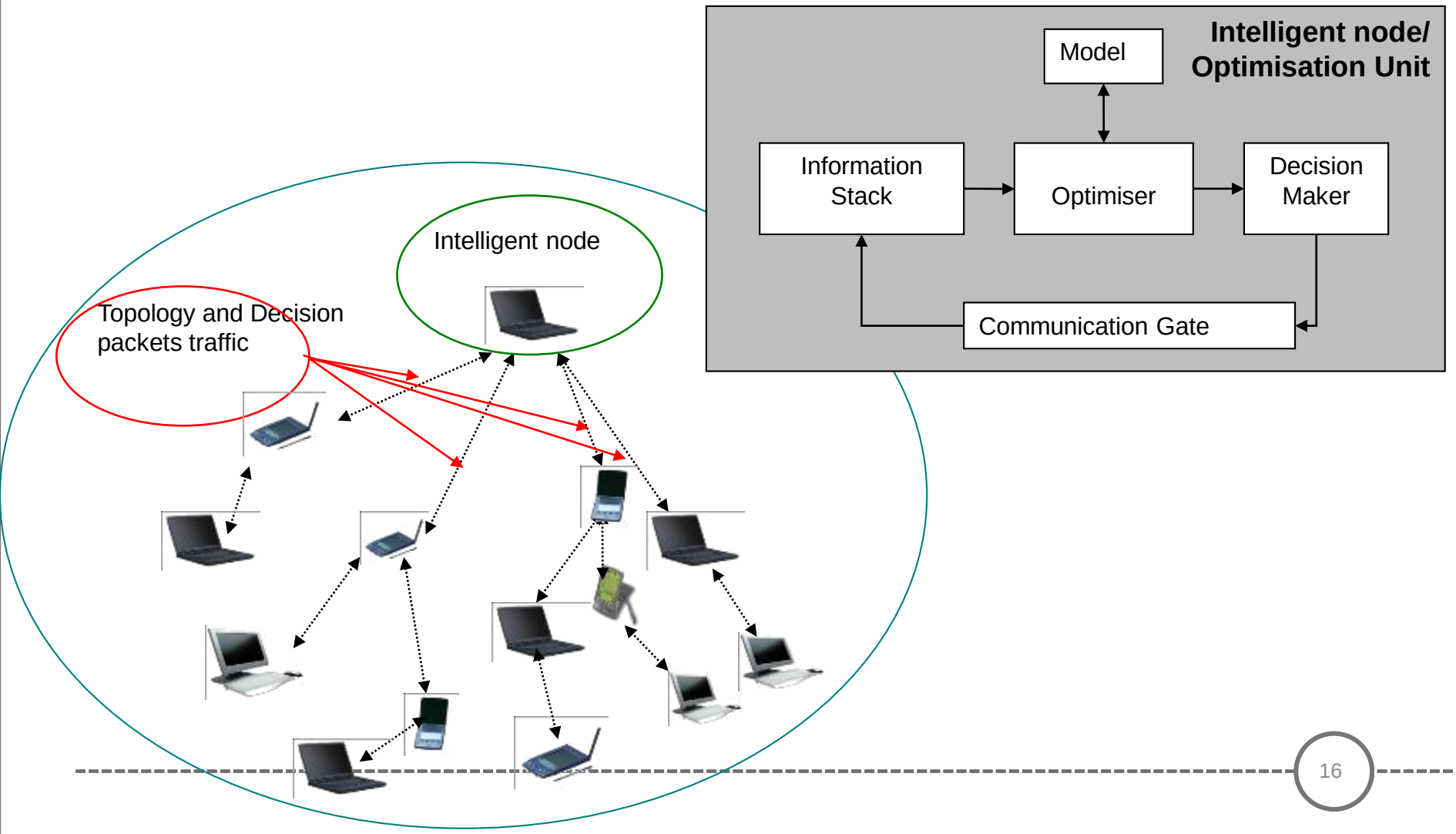

I-MAN Optimal Selection

Table 1 I-MAN Optimal Selection

Case	Previous routing protocol	Time (sec)	Current Context		Optimal settings
			No. of nodes	Mobility (m/s)	I-MAN protocol
default	---	0-320	16	4	AODV
1	AODV	320-960	16	4	DSR
2	DSR	960-1920	55	4	OLSR
3	OLSR	1920-2880	55	9	OLSR
4	OLSR	2880-3840	21	9	DSR
5	DSR	3840-4800	21	17	AODV

Cost Comparison

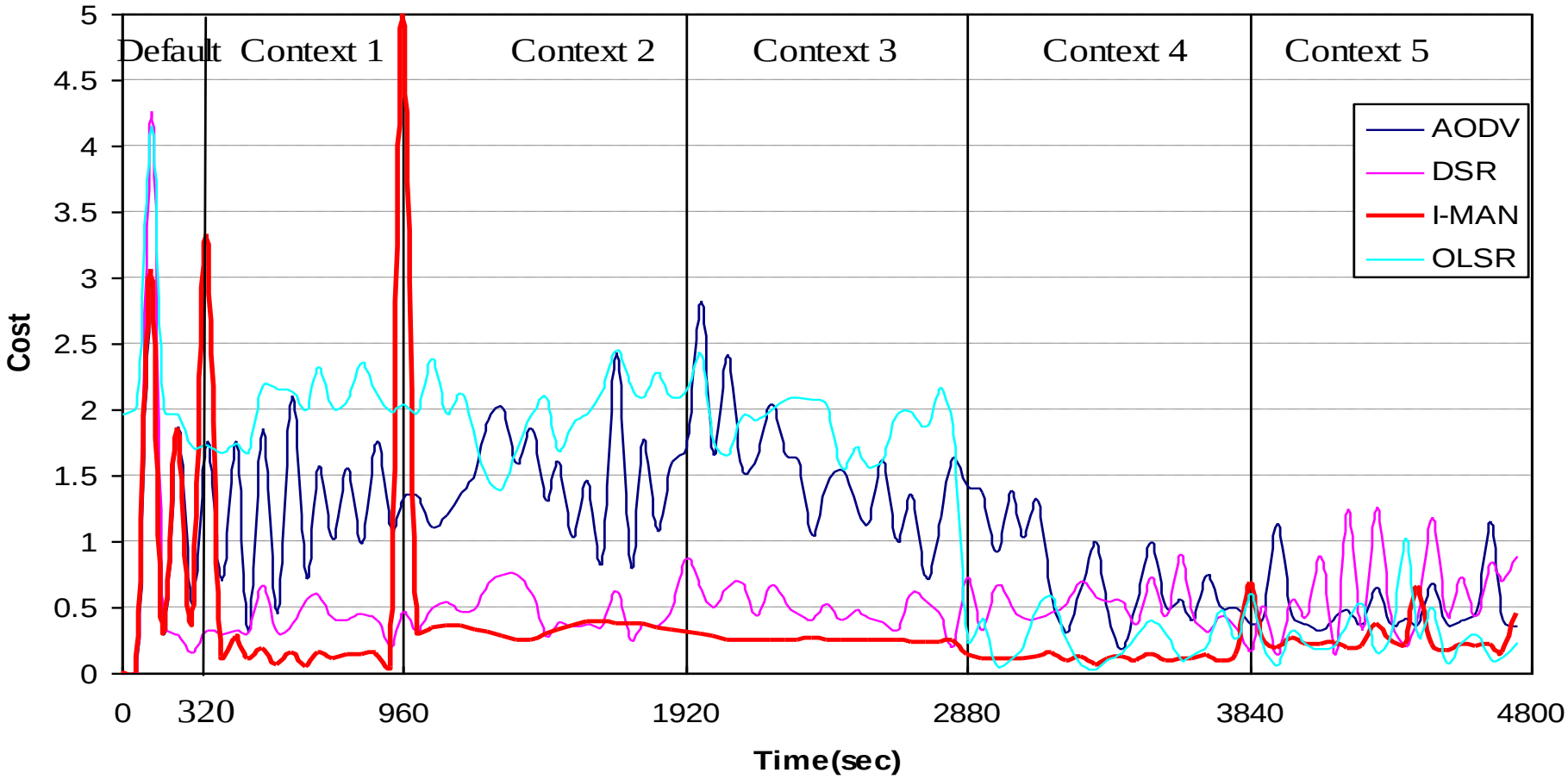

Cost = data drop + delay + load + R.A. + (1-Throughput)

Cost Percentage Chart

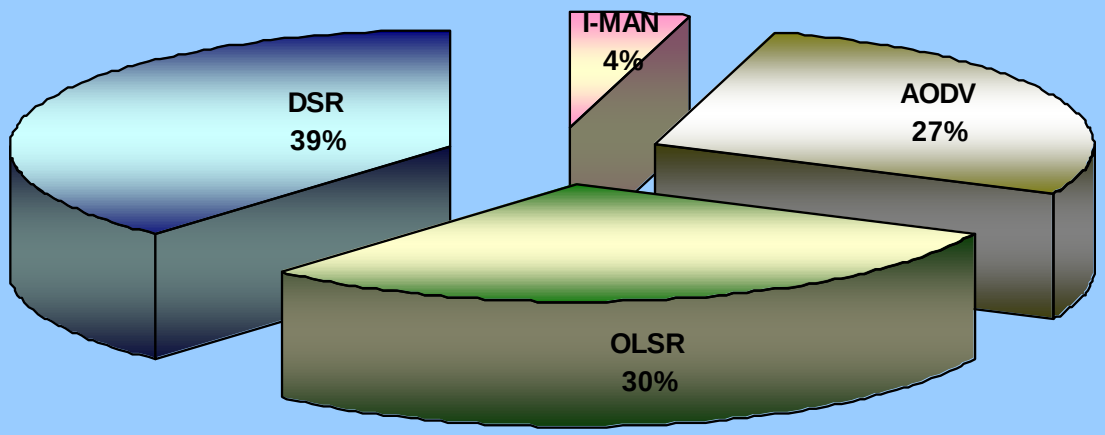

Current research

1. IoT Intelligent Supervision System in Oil Pipelines Grid

Motivations :

- Appreciate the oil pipelines transmission process through visual simulation from source to destination.
- Provide visual monitoring system for the transportation process.
- Reduce the waste in resources.
- Evaluate and analyse the parameters affecting oil pipelines transmission grid.
- Enhance the security of the oil transportation process. The project aims to involve the latest technologies and minimise reliance on the human workforce.

Main Research Aim :

Design and simulate a user-friendly Intelligent control and monitoring system for oil pipelines grid to decrease environmental and financial losses whilst achieving better communication.

The main factors of improvement can be: better quality of service, reduced losses in products and resources (such as equipment, devices and manpower) and reduced damage to the environment.

Why Supervision System in Oil Pipelines Grid?

- The security of oil transportation through pipeline grids is a high priority.
- For example, after 2003, the Iraqi government was no longer able to provide sufficient security. One of the areas most affected were the oil pipelines. The unsecure conditions created a golden opportunity for oil theft and intrusion.

Oil stealing point discovered after one year in Karbala province 2015

Bombed pipelines near the water supply, river Tigris

Tigris oil spill pollutes Iraq's water supply 2014

Why Internet of Things and Artificial Intelligence?

UNIVERSITY OF WEST LONDON
The Career University

- The reliability of IoT allows the user to gain useful data to satisfy the needs, analyse health, gain the direction, achieve better communication and have a higher accuracy percentage. In this research, the Internet of things were the pressure and volume sensors near the valves and pumps.
- Nowadays, AI has proven its effectiveness in many disciplines and therefore Neuro-Fuzzy (NF) will be used as the prediction tool in the system.
- The project proposed to blend Internet of Things (IoT) with artificial intelligence (AI) to create a knowledge-based system to monitor and supervise oil transportation through the pipeline grid.
- Apply an IoT intelligent system in oil pipeline transportation grids to decrease environmental and financial losses whilst achieving better communication.

Neuro-fuzzy Supervision System Stages

Three stages are proposed to develop the final simulated supervision system, they are:

- stage one; Neuro-fuzzy Supervision System
- stage two; Hierarchy Neuro-fuzzy Supervision System
- stage three; IoT Hierarchy Neuro-fuzzy Supervision System.
- The first phase showed promising results, while work will continue with the other two phases.

An Iraqi oil refinery worker fixes a small leak in the Iraqi-Turkish oil pipeline in Kirkuk

Neuro-fuzzy Supervision System in Oil Pipelines Grid Flowchart

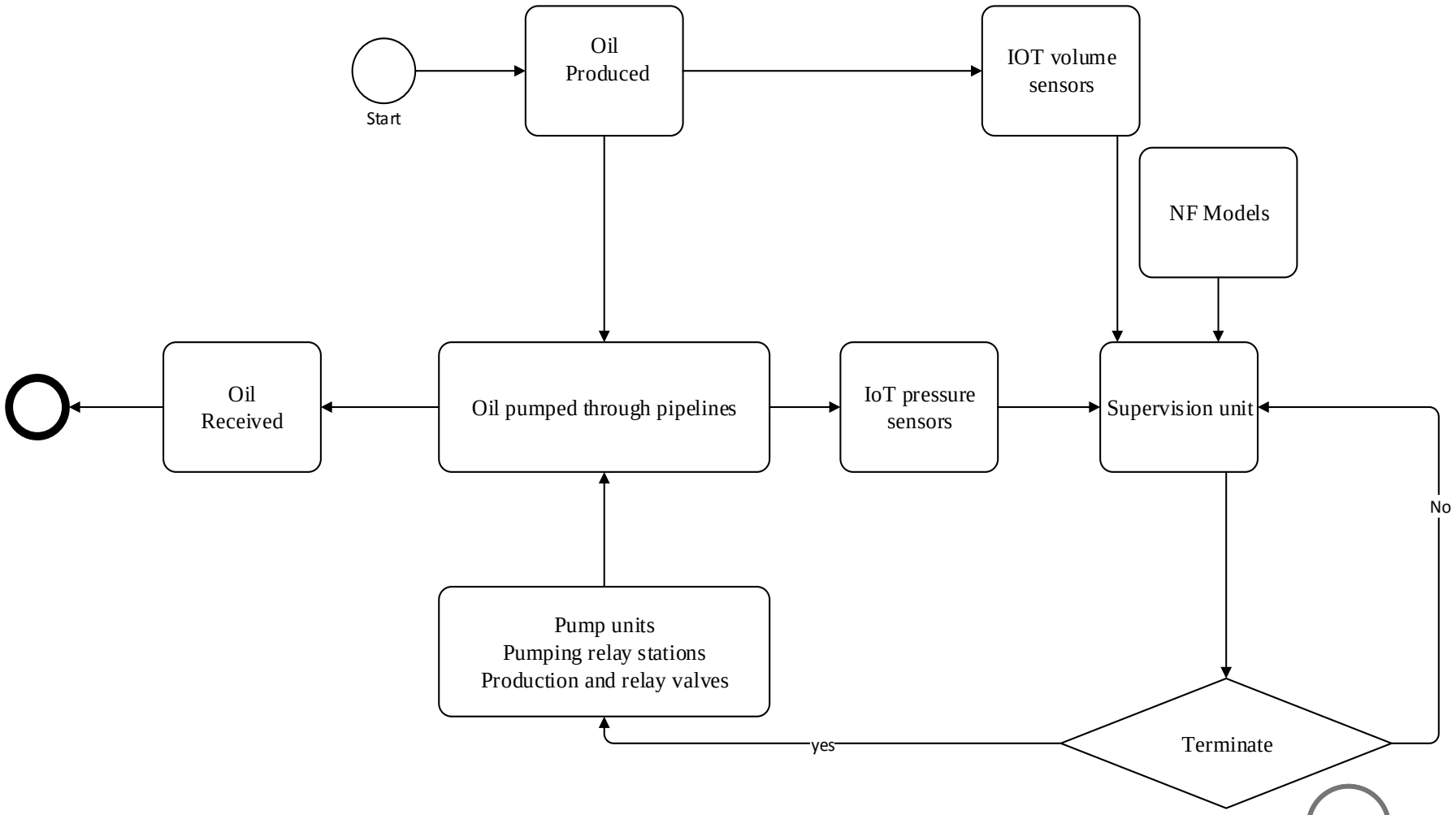

User-friendly Intelligent control and monitoring system

Stage One:
Process (Physical Subsystems)

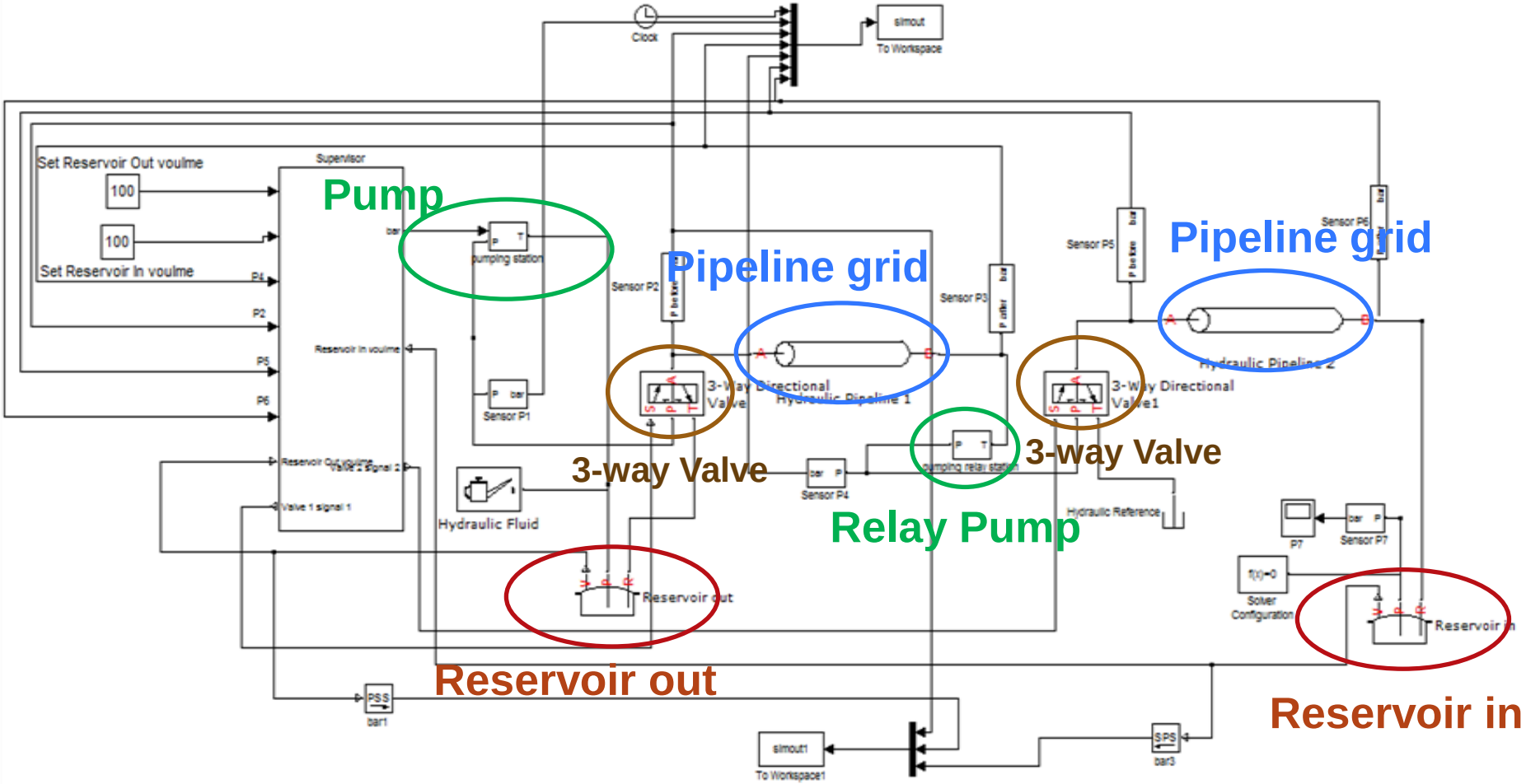

Oil Pipeline Supervision System in Simscape

Stage One: Sensors

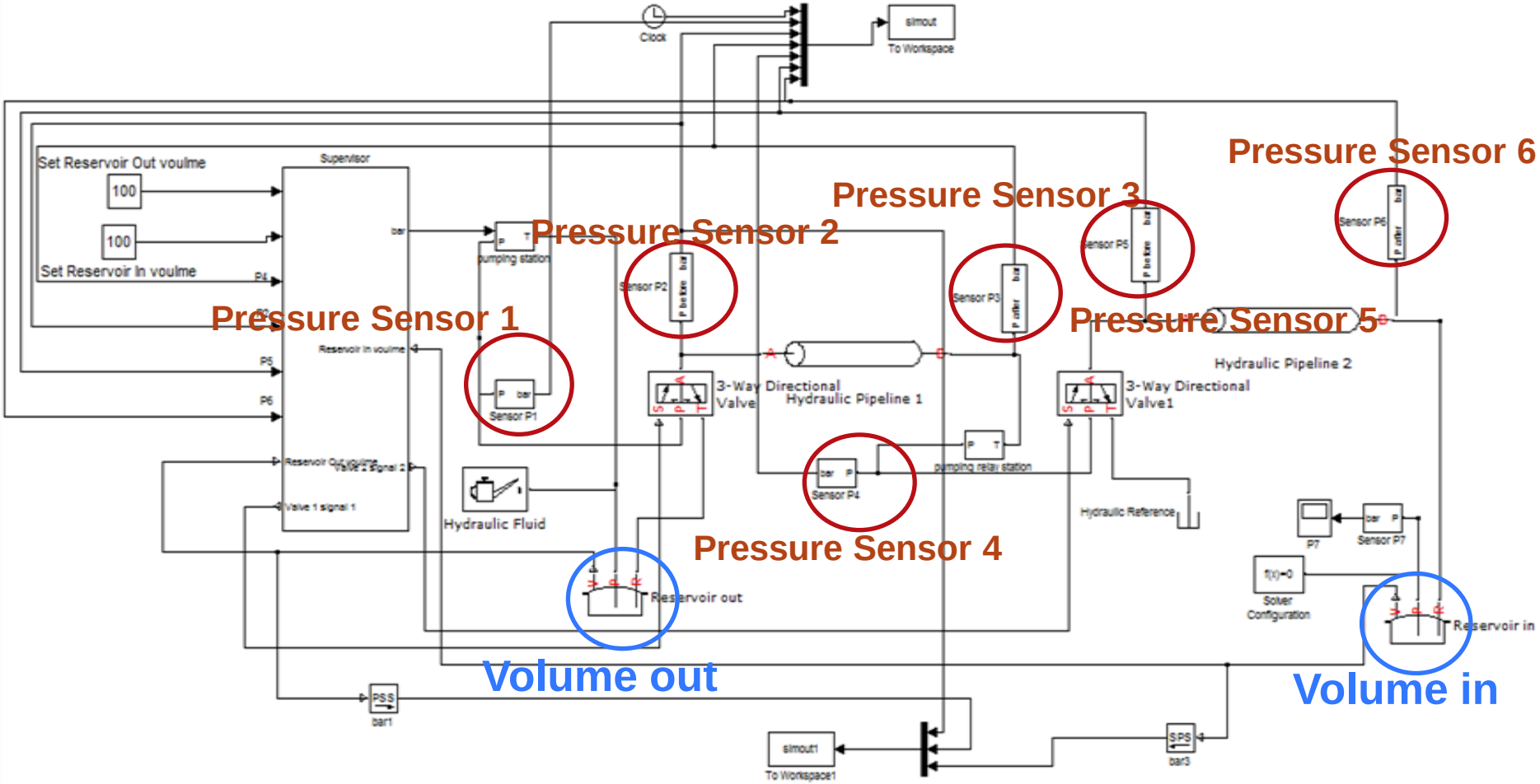

Oil Pipeline Supervision System in Simscape

Stage One: Control System

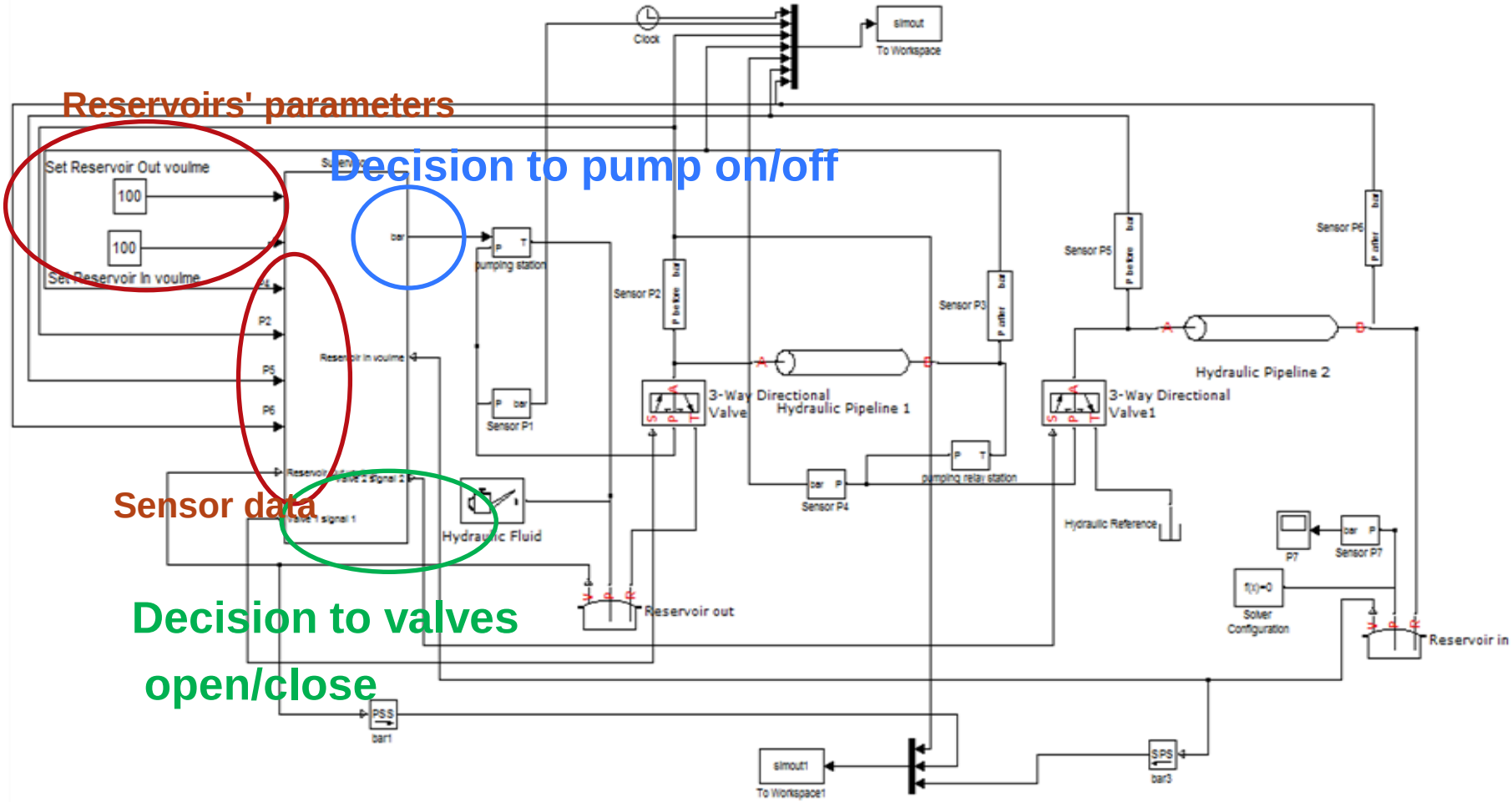

Oil Pipeline Supervision System in Simscape

Simulation Setting

UNIVERSITY OF WEST LONDON
The Career University

Table 1. Normal condition simulation parameters

Simulation parameters	
Reservoir out	Vol_{out}(set) 100 m^3
	Vol_{out}(initial) = 200 m^3
	Pressurization level= 0
	Return line diameter = 0.02 m
	Pressure loss coefficient in return line = 1
Reservoir in	Vol_{in}(set) = 100 m^3
	Vol_{in}(initial) = 0.02 m^3
	Pressurization level = 0
	Return line diameter = 0.02 m
	Pressure loss coefficient in return line = 1
Pump station	Pump displacement = 5E-6 m^3/rad
	Volumetric efficiency = 0.92
	Total efficiency = 0.8
	Nominal pressure =10 MPa
	Nominal angular velocity = 188 rad/sec
	Nominal kinematics viscosity =18 cSt
pipeline	Pipe cross section type = circular
	Pipe internal diameter = 0.1 m
	Geometrical shape factor = 64
	Length = 20 km
	Aggregate equivalent of local resistance = 1 m
	Internal surface roughness height= 1.5E-05 m
	Laminar flow upper margin = 2000
	Turbulent flow lower margin = 4000
	Pipe wall type = Rigid
	Specific heat ratio = 1.4
Hydraulic valves	Model parameterization = By maximum area and opening
	Valve passage maximum area = 0.05 m^2
	Valve maximum opening = 0.5 m
	Flow discharge coefficient = 0.7
	Orifice P-A initial opening = 0 m
	Orifice A-T initial opening = 0 m
	Critical Reynolds number = 12
	Leakage area= 1E-12 m^2
Simulation time	8226 sec

Table 3. Scenario A simulation parameters

Reservoir	Volume Set (m3)	initial volume (m3)
Reservoir Out	Vol_{out} (set) = 100	Vol_{out} (initial) = 200
Reservoir in	Vol_{in} (set) = 50	Vol_{in} (initial) = 0.02

NF model

Various simulation data were used to create this model which will be the prediction tool for the supervision system.

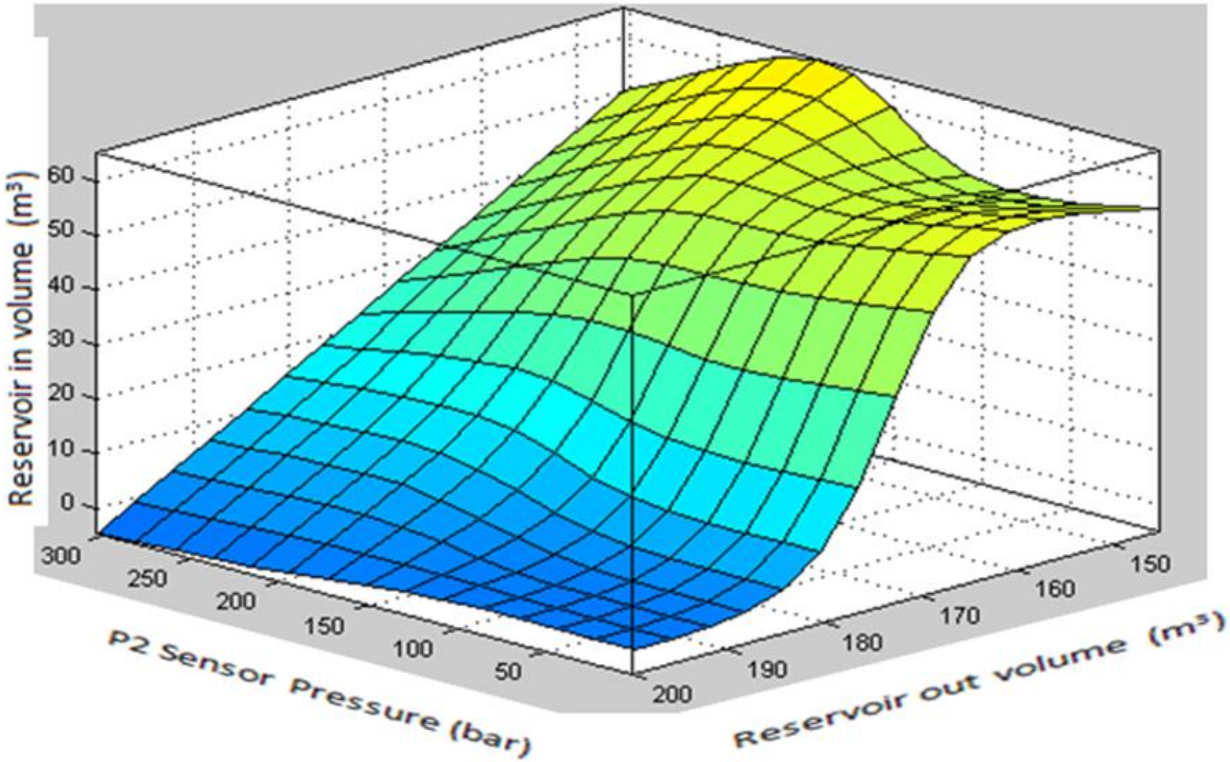

3D NF Model Surface for the pressure in P2 location

Stage One: Test

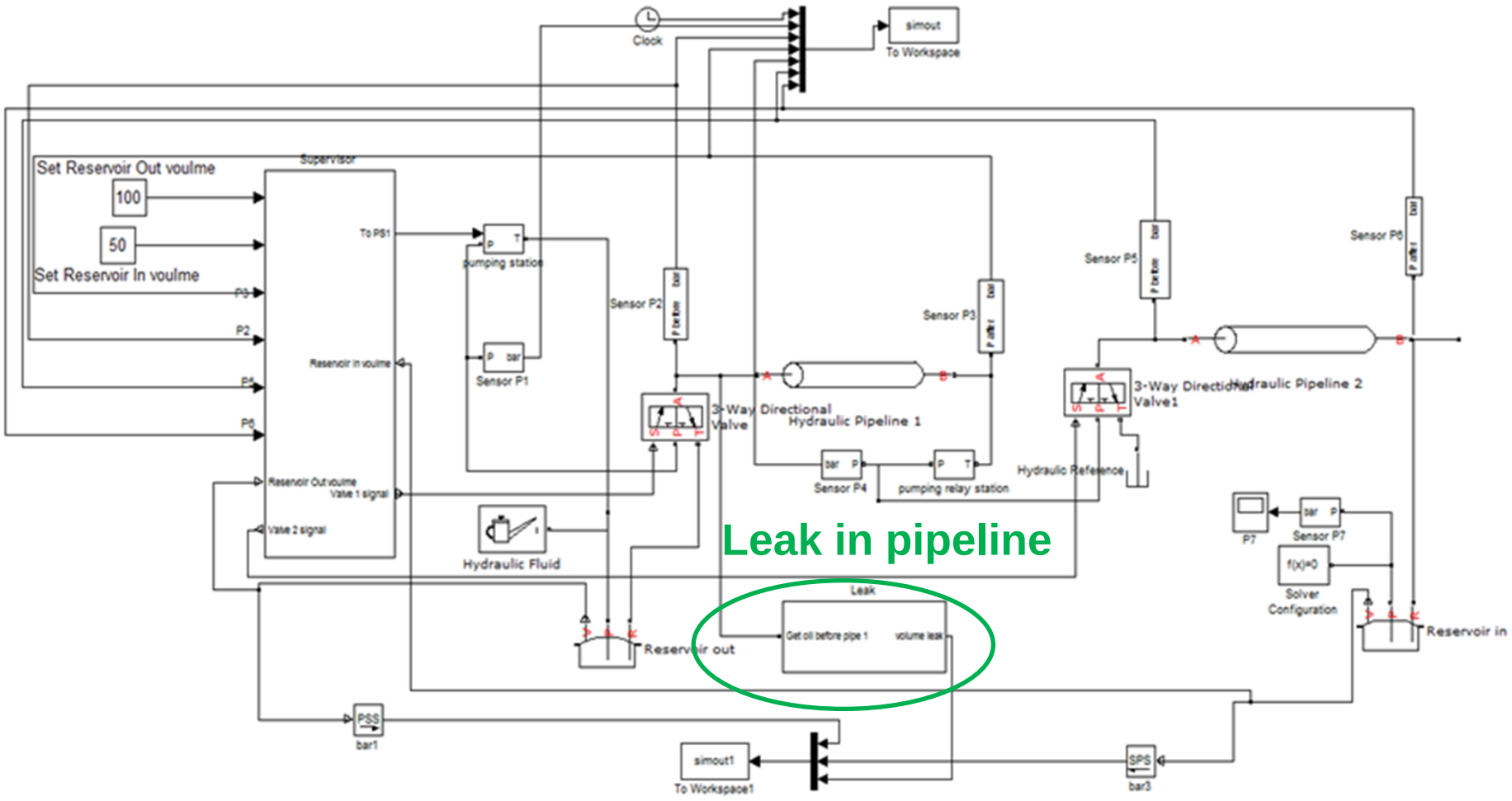

Oil Pipeline Supervision System in Simscape

Stage One Results

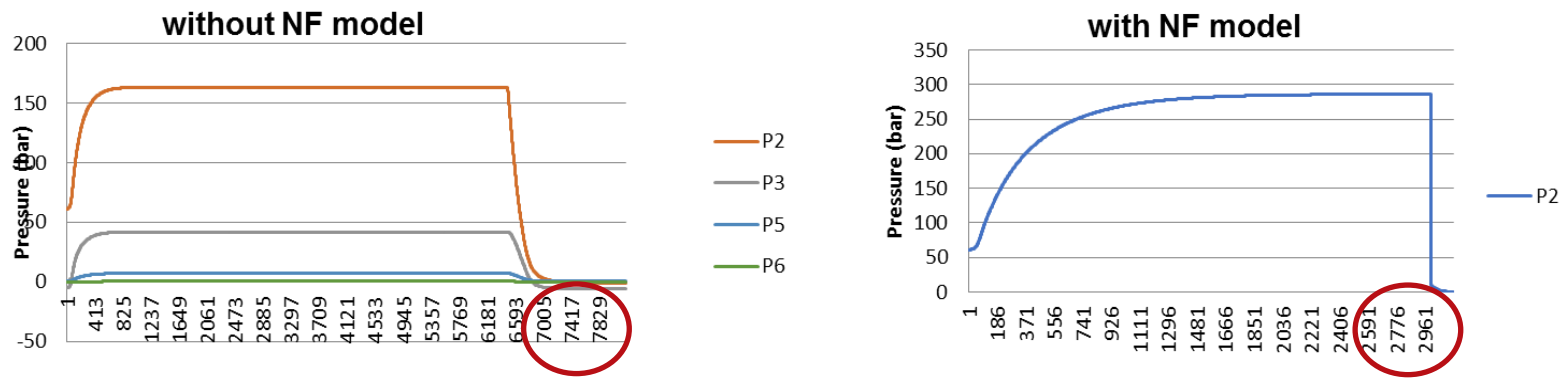

a) Pressure sensors readings in leak condition

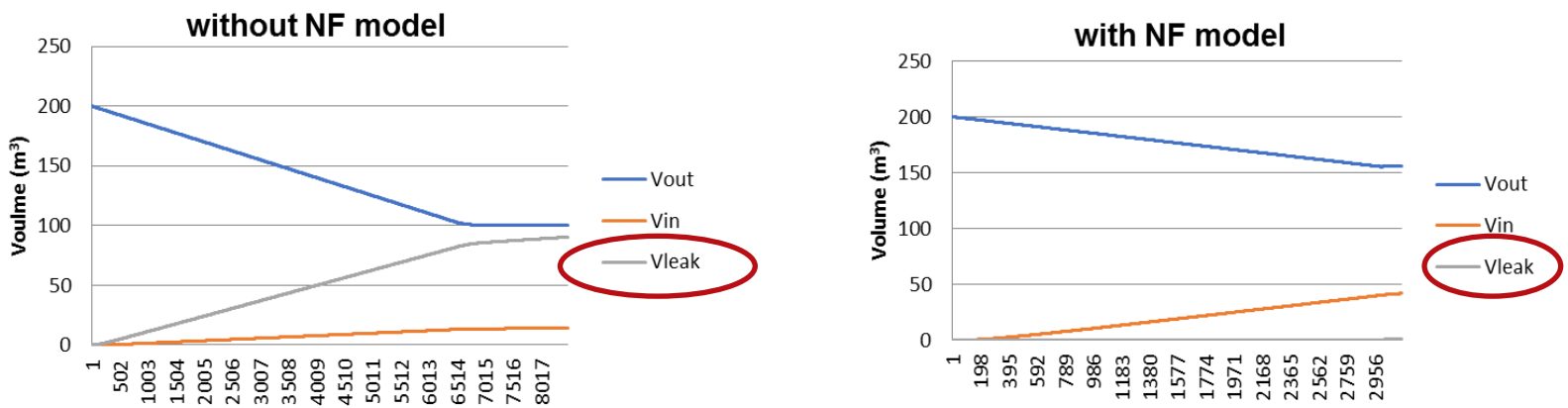

b) Volume sensors reading in leak condition

Pressure and volume sensor readings with and without NF model in leak condition

Simulation in Simscape Software Package

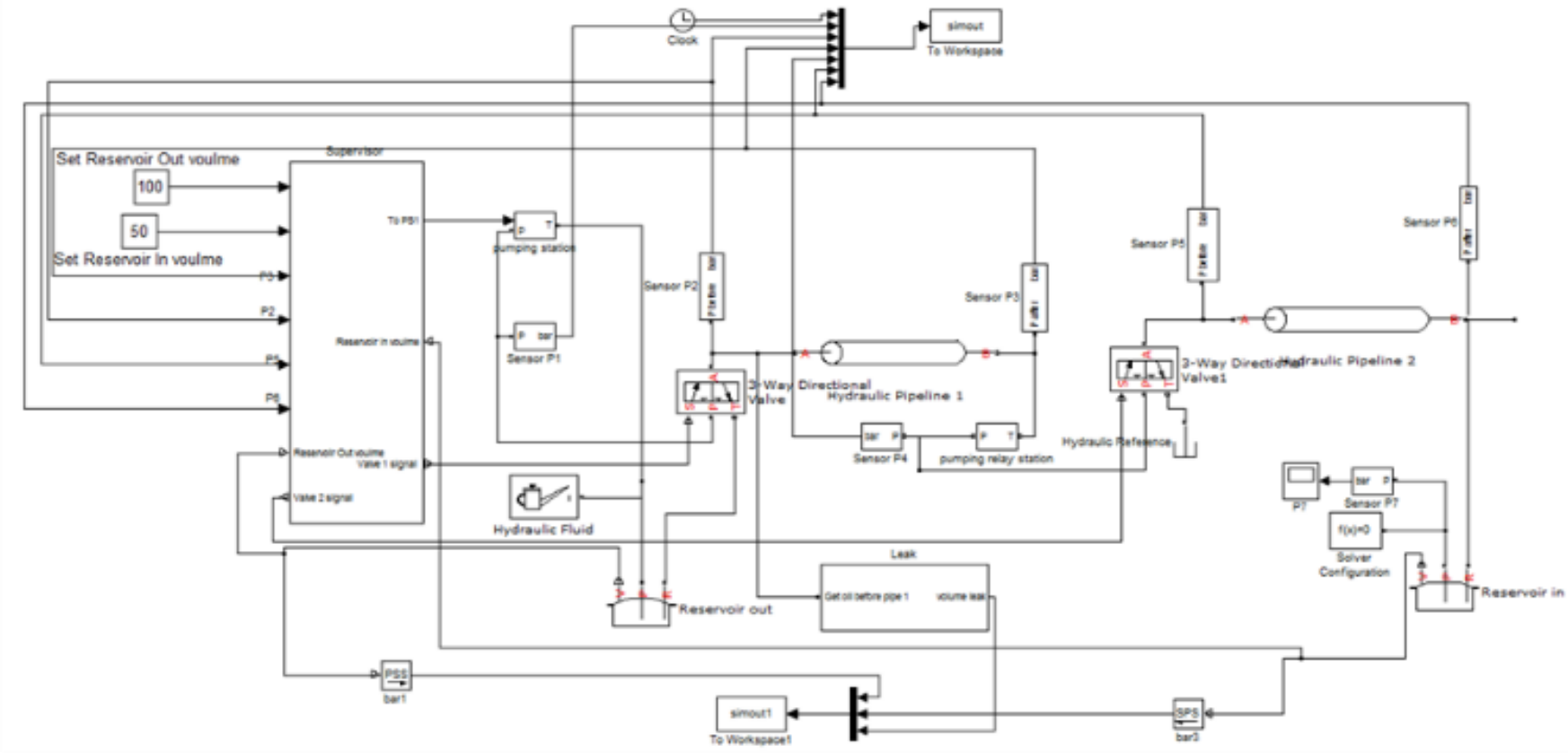

Nagham H. Saeed and Maysam F. Abbod, "Modelling Oil Pipelines Grid: Neuro-fuzzy Supervision System", *International Journal of Intelligent Systems and Applications (IJISA),* Vol.9, No.10, pp.1-11, 2017. DOI: 10.5815/ijisa.2017.10.01.

Stage Two:
Hierarchy Neuro-fuzzy Supervision System

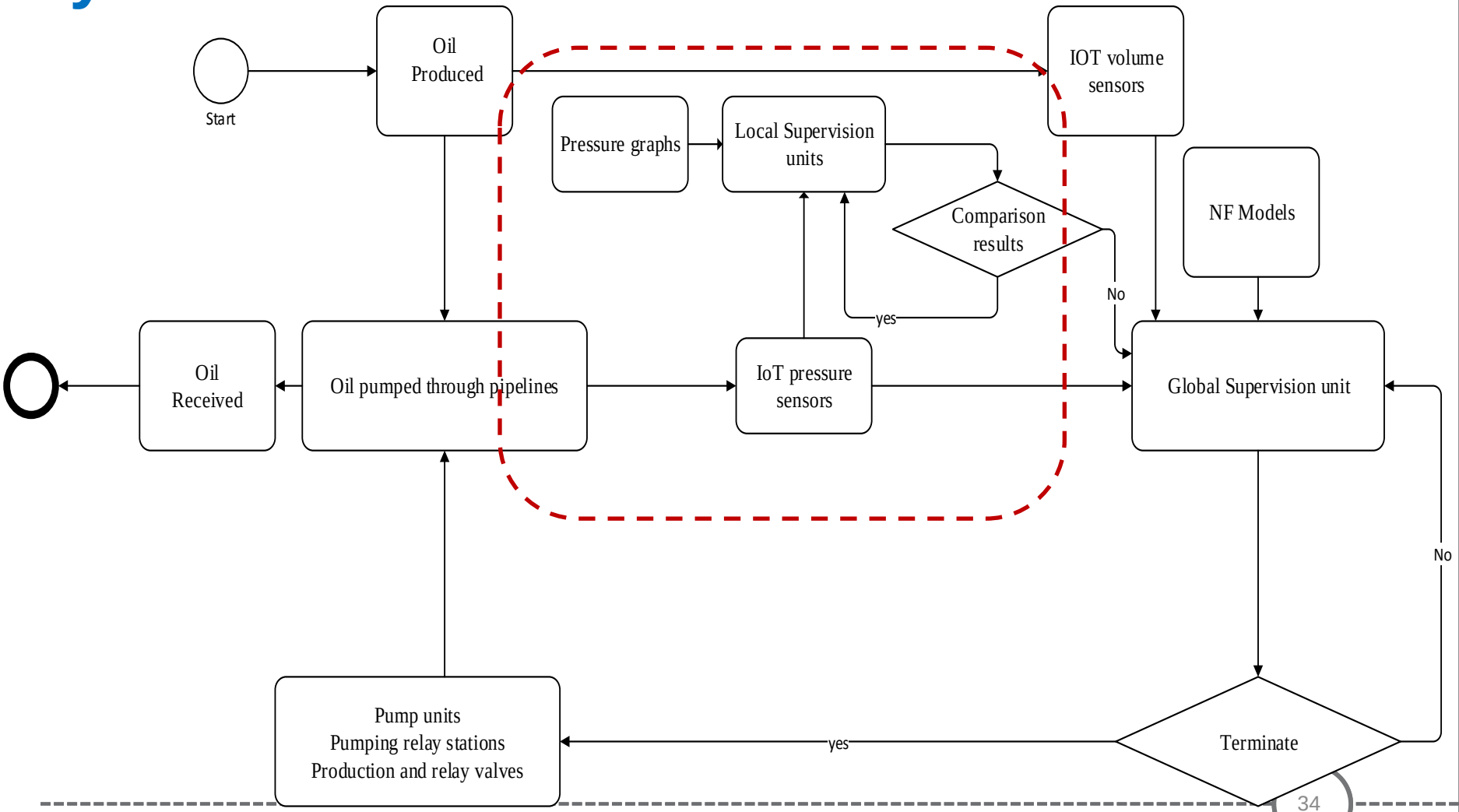

Stage Two: Hierarchy Neuro-fuzzy Supervision System

- By adding Local Supervision System units near to the sensors, it is expected it will r**educe unnecessary communication traffic between the Global Supervision system and the process sensors**.
- Decentralising will reduce the load on the Global System and will mean a **reduced impact if a single point of failure (SPOF) occurs** in the Global System.

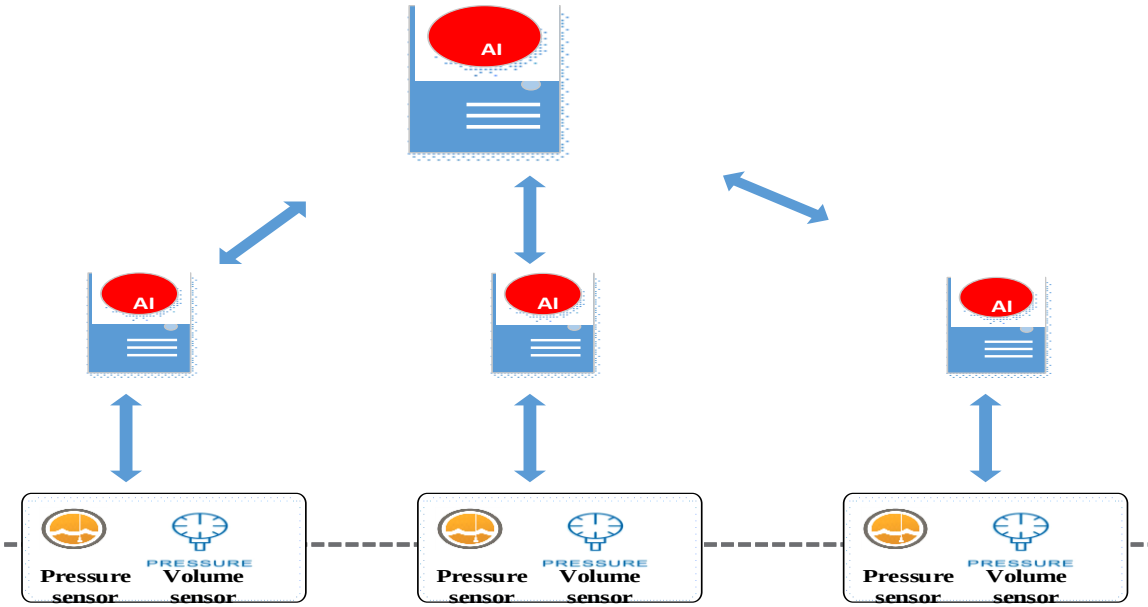

Stage three; IoT Hierarchy Neuro-fuzzy Supervision System

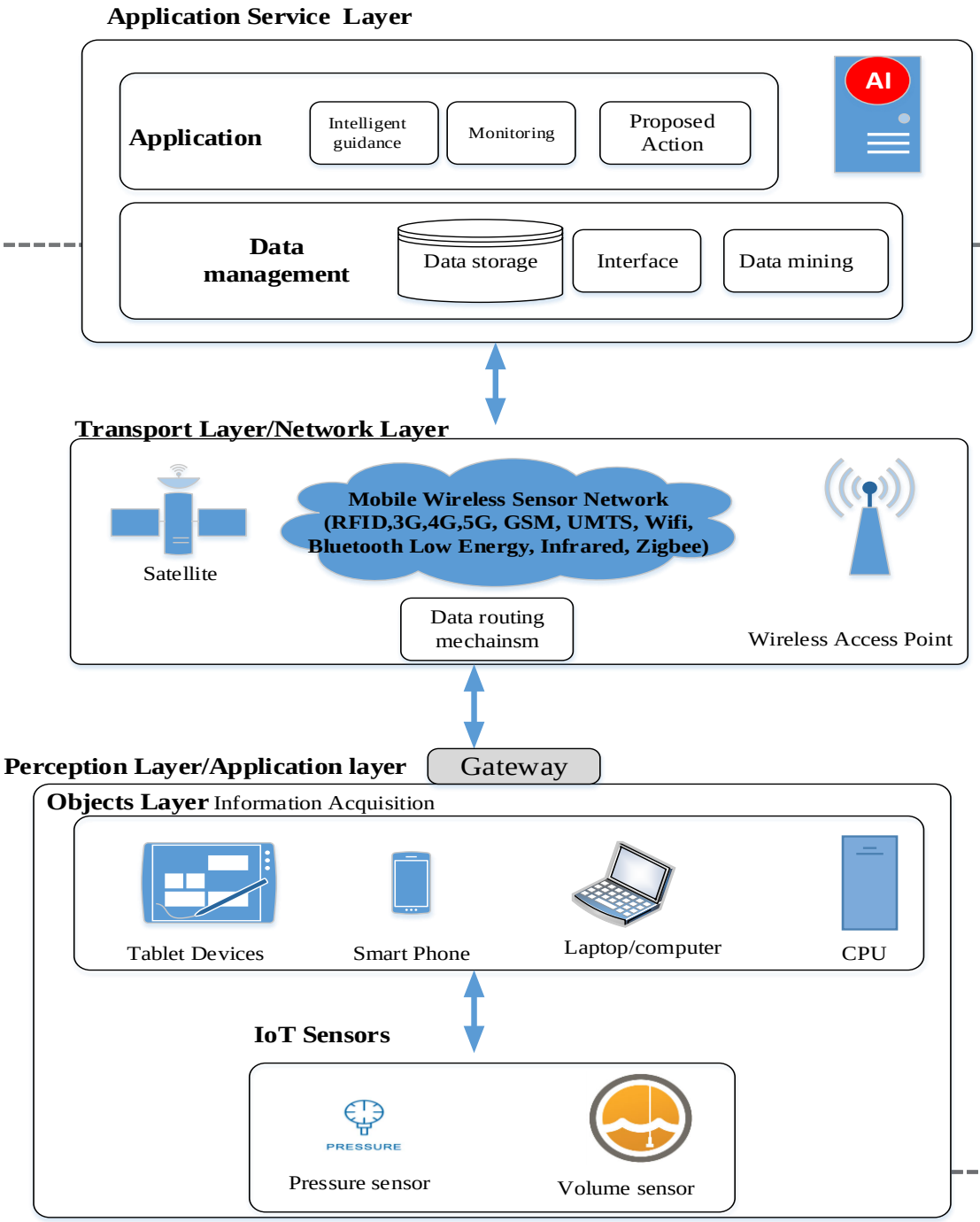

Monitoring and Controlling Water Pipelines in Buildings

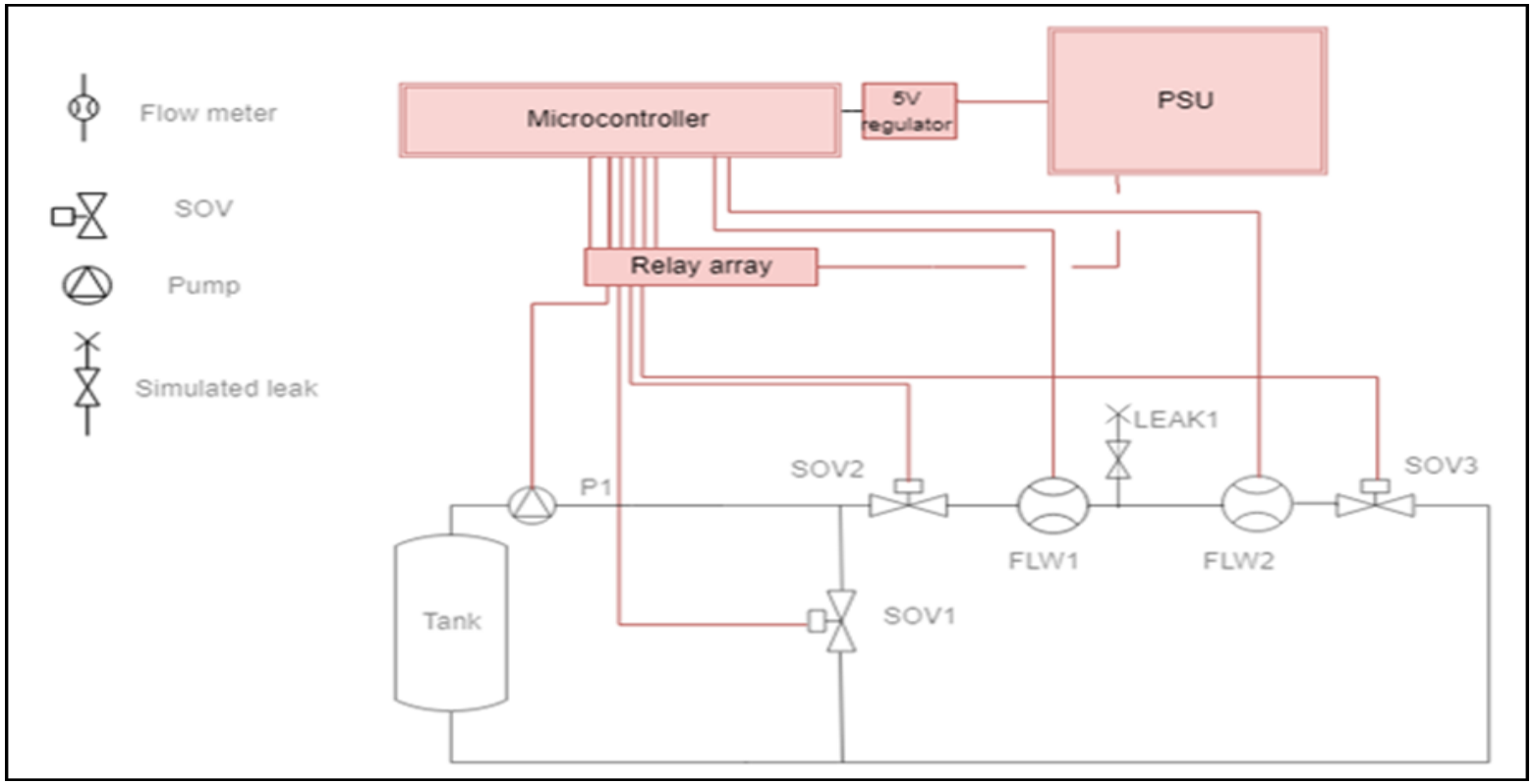

Proposed prototype solution block diagram

Monitoring and Controlling Water Pipelines in Buildings

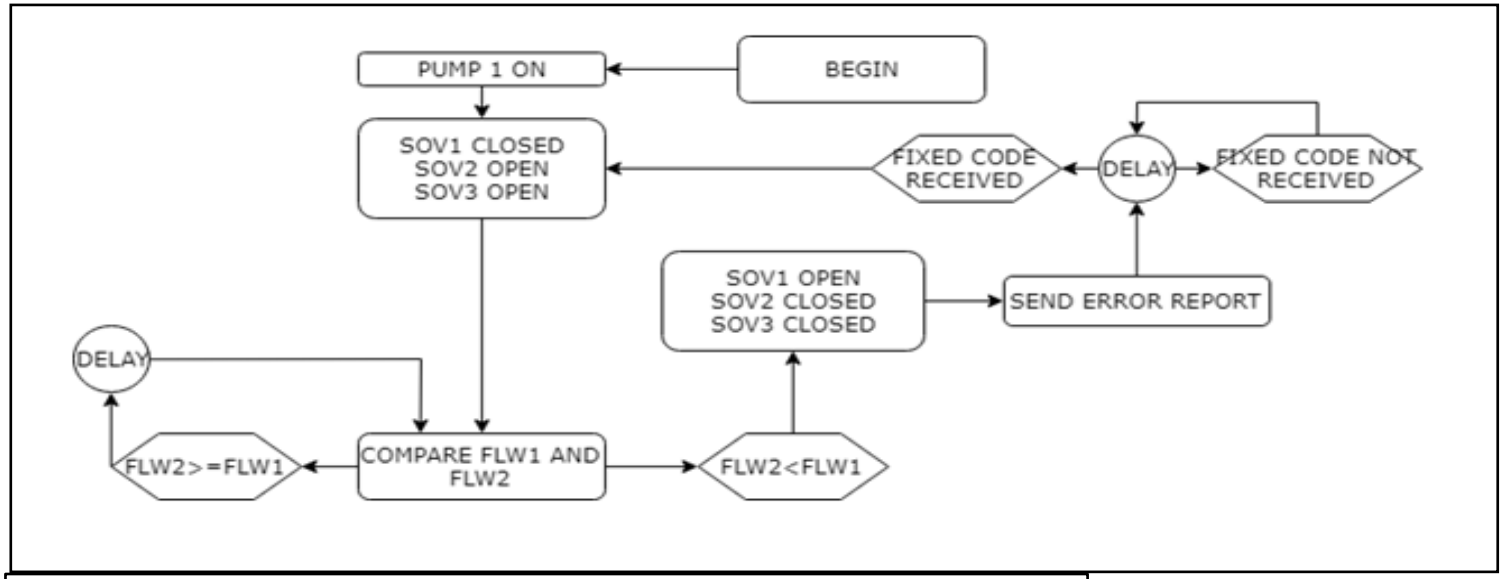

Prototype flowchart

```
setup function{
        begin serial data transmission;
        state I/O pins used;
        nullify variables;
}
loop{
        for 1 second do:
                flow1 = pulseCountInOneSecond / calibrationFactor;
                flow2 = pulseCountInOneSecond / calibrationFactor;
        if flow1 - flow2 > 0 for 5s -> leak();
        else -> no leak;
}
```

Microcontroller pseudocode

Implementation in Progress of Leak Detection System

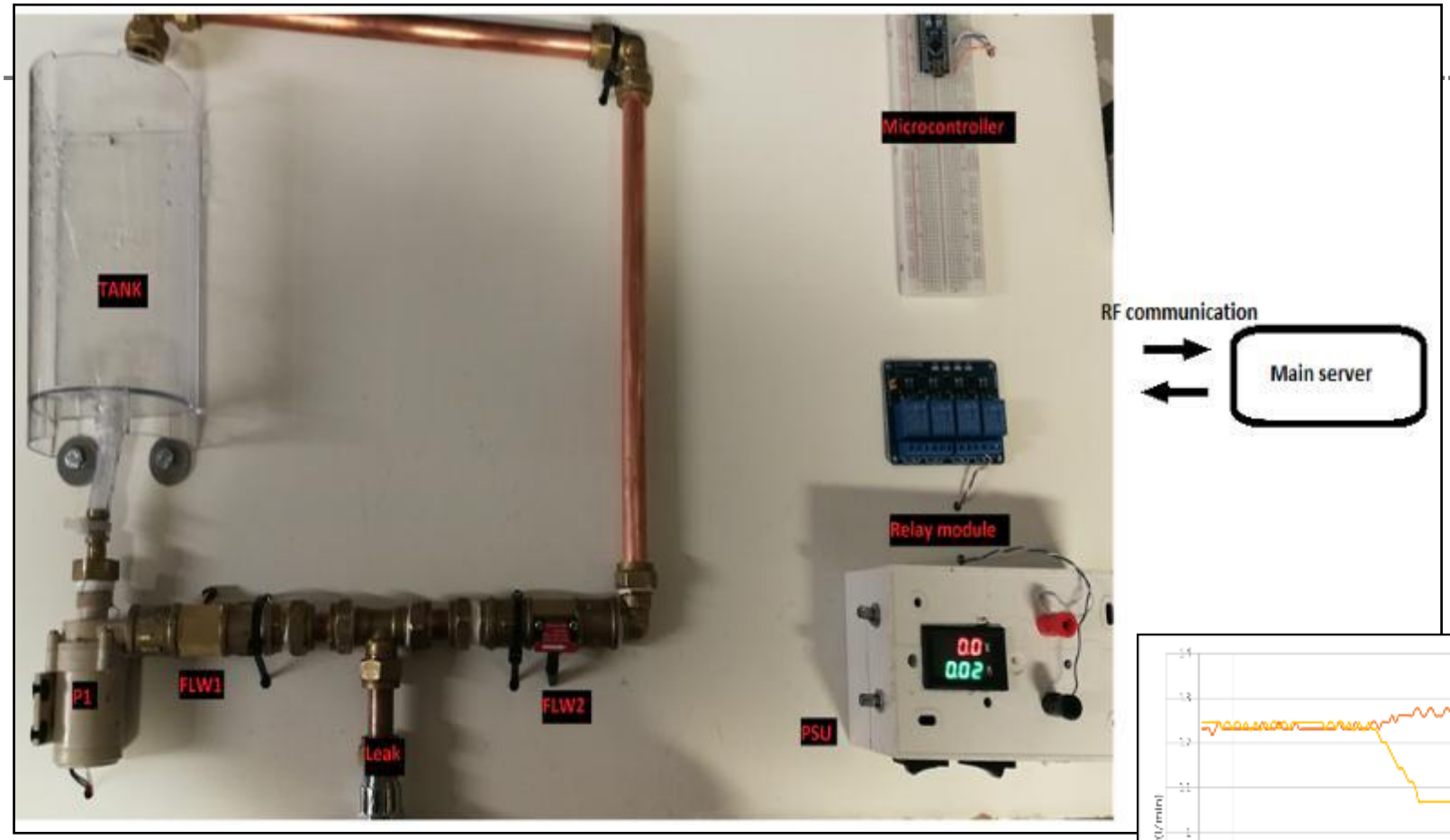

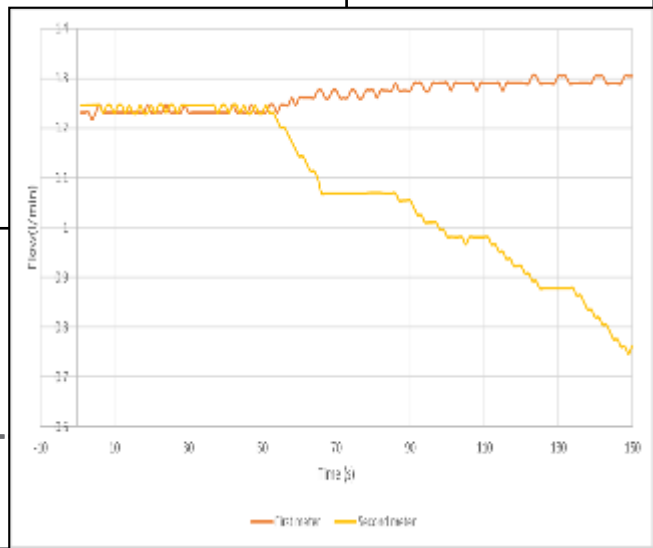

Flow meter rates comparison graph

CollaborateCom2019

UNIVERSITY OF WEST LONDON
The Career University

CollaborateCom
Collaborative Computing: Networking, Applications and Worksharing

EAI - Reinventing the governance and economy of research and innovation
The leading professional community for research career enhancement in the digital age

EAI

HOME | COMMITTEES | FOR AUTHORS | CALLS | WORKSHOPS | KEYNOTES | PRACTICAL INFO | SPONSORSHIP | CONTACT US

CollaborateCom 2019 - 15th EAI International Conference on Collaborative Computing: Networking, Applications and Worksharing

August 19-22, 2019
London, Great Britain

Best CollaborateCom paper currently at

1100 downloads

5 citations

... and counting!

SUBMIT PAPER

Call for Papers

Indexed in

Ei Compendex, ISI Web of Science, Scopus, CrossRef, Google Scholar, DBLP, and more.

Publication

Mobile Networks and Applications (MONET) Journal (IF: 2.497)

EAI Endorsed Transactions on Collaborative Computing

Learn more

Publishing Partner

Springer

Collaboratecom2019

Full Paper Submission deadline 31 March 2019

CollaborateCom 2019 international conference

To be held in August

KEYNOTES

- Niki Trigoni a Professor at Oxford University Department of Computer Science and fellow of Kellogg College.
- Professor Tasos Dagiuklas is the leader of the Smart Internet Technologies (SuITE) research group at the London South Bank University where he also acts as the Head of Division in Computer Science. Tasos has 10+ EU projects and received funding of £7+ million,
- Mr Jun Xu is Vice President of Huawei Cloud Division, before he was Vice President of Huawei Enterprise USA in that role.

EnAppsIoT Workshop

Aim

Bring together practitioners and researchers from both academia and industry in order to have a forum for discussion and technical presentations on the recent advances in application and implementation of the Internet of Things in Engineering. Researchers are invited to submit their state-of-art work to address the IoT challenges in Engineering application and showcase achievements in the field.

Topics of interest include, but are not limited to:

- **Engineering Applications, including: Smart Grid/Smart Metering; surveillance and Intelligent Transportation Systems.**
- **Smart House/Neighborhood/City, including: Mobility management, Context awareness, Sustainable design and Industrial use cases showing gaps to be filled by future research**

Current research

UNIVERSITY OF WEST LONDON
The Career University

2. Effective Cardiology Diagnostic learning framework for human electrocardiograms (ECGs) readings

Motivations :

- Globally, cardiovascular conditions are the **most common cause of death.**
- To **reduce diagnostic and therapeutic errors** that are inevitable in human clinical practice.
- To **improve healthcare quality and outcomes** and providing affordable care in health sector (e.g. NHS).
- To **eliminate inefficiencies** that leads to cost-saving

Main Research Aim :

Establish and test a diagnostic framework based on Patients Electrocardiograms (ECGs) Readings. The Cardiology framework is a deep learning system based on big data analysticss (patient records) and classification

.

2. Deep learning Diagnostic Procedure for Electrocardiograms (ECGs) Readings

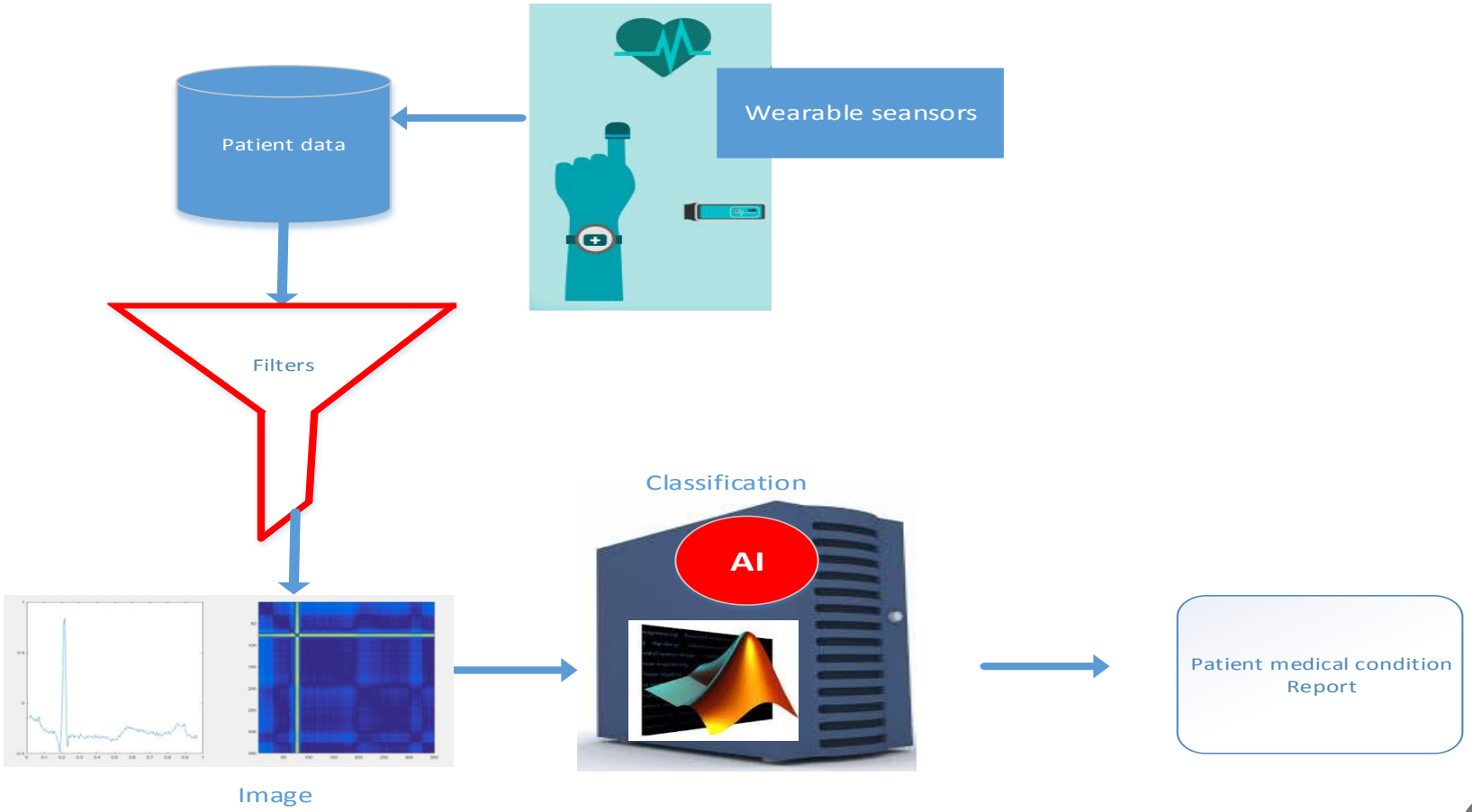

Current research

3. Assessment in Education

Motivation:

- **Improve students' engagement** in their modules, and hence improve the overall quality of their attempt at summative assessment, by using a range of feed-forward techniques.
- **Encourage moving from feedback to feed-forward**. The end of module feedback given to students is difficult to feed-forward into future assessment

Main Research Aim :

The aim is to **evaluative mechanisms and methods** to assess the effectiveness of feed-forward within assessment intervention.

Research interest

4. Renewable Energy Management System

Motivations :

- Better quality of service in Micro Grid (MG) electricity stations. will optimize the electrical vehicle (EV) user time and decide the optimize solution for the driver according of his needs.
- Another step forward to create smart city
- Efficient management system for EV will encourage more people to own one before 2040.

Main Research objectives :

Design and create a management system for the renewable energy in MG electricity stations with the Support of Artificial Intelligence and Internet of Things (IoT).

Renewable Energy for Electricity Stations in Micro Grid

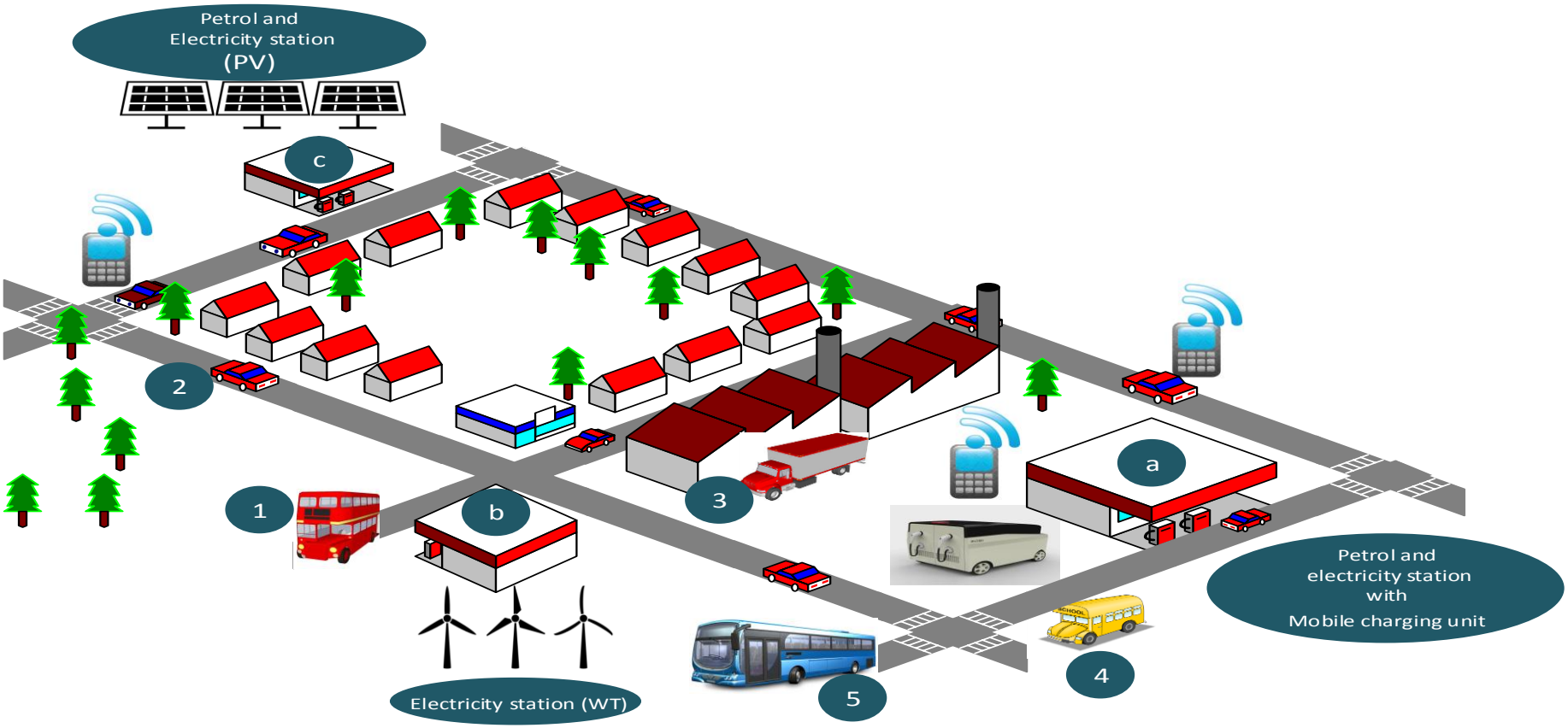

Thank you for listening
Any Questions?