Course: CERT HE Skills for the Workplace,

Health & Social Care

Module: Effective Teamwork and Communication

BMSW4002_LON

Lecturer: Joy Botu

‘‘The importance of Effective Communication in the Workplace’’

Name: Brunela de Carlo Bovo

Student number: 1915941

London, 2022

Table of Contents

1 Introduction P.3

2. Importance of Communication and its barriers in the workplace P.3

3. Models of Communication.....P.4

3.1 Shannon and Weaver (1948/49) ….....P.4

3.2 Schramm (1954) P.5

3.3 Berlo (1964) P.6

4. Referencing theory from literary sources.....P.8

5. Communication Skills P.9

5.1 Verbal Communication P.9

5.2 Non-Verbal Communication P.9

5.3 Active Listening P.10

6. The advantages and disadvantages of Technology in Communication P.11

7. Conclusion P.12

8. References P.13

1. Introduction

According to G.G. Brown, communication transfers information from one person to another, generating confidence or not, if the transferred information is understood by the receiver (Jureddi and Brahmaiah, 2016). This report aims to show the understanding of communication in the workplace, explain the barriers that can affect effective organizational communication, and the consequences of delivering poor communication.

The analysis of case studies and personal experiences helps to understand communication models and find a solution to possible communication failures in the workplace.

Furthermore, discuss the communication skills through case studies, and recognize the advantages and disadvantages of technology in communication allow it to achieve effective communication in the workplace.

2. Importance of Communication and its barriers in the workplace

According to Marques (2016), organizational communication represents a relevant space both in academia and in the corporate world, increasing the practical use of effective communication. Valuing the participation of all employees during the business, facilitating interpersonal relationships and establishing a relationship with the company and employees, allows them to monitor their main actions and verify the impact of their tasks in achieving the outlined results. In this way, noise and conflicts that hinder good interpersonal relationships in the work environment can be avoided. (Kunsch, 2006).

Despite this effort to perform effective communication, the understanding of the message is not always achieved, this can be due to barriers, such as language, physical, and attitudinal barriers; psychological barriers cause distortions that hinder the communication process. (Jureddi and Brahmaiah, 2016).

By Kunsch (2006), the negative consequences of poor communication impacts on the workplace, people, and culture. Companies that do not deal with internal communication strategically tend to have low productivity, high turnover rates, little collaboration in achieving goals, many conflicts, and reworks that generate waste and costs (Marka Results, 2021).

3. Models of Communication

Theorists throughout the history of communication have developed many models that aim an understand communicational reality. However, three of these models will be analysed here, are they: Shannon and Weaver's (1948/49), Schramm's (1954), and Berlo's (1964).

3.1. Shannon and Weaver (1948/49)

Exploring the linear model of 1949, being before the implementation of the feedback in the Shannon and Weaver model of communication, which is a mathematical theory, that states that human communication is composed of six fundamental points: sender (information source), the encoder (transmitter), channel, noise, the decoder (receiver), and receiver (destination).

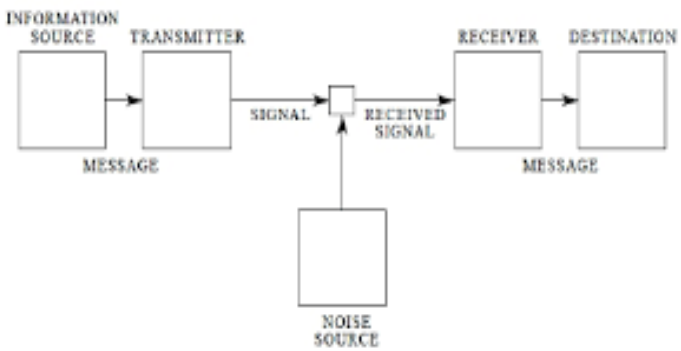

3.2. Schramm (1954)

Different from the Shannon and Weaver model, Schramm, assumes that '*communication is circular',* in this model there is feedback. Schramm stated that the two indispensable processes of successful communication are encoding and decoding, the author also accepted that, knowledge and experience are important in communication.

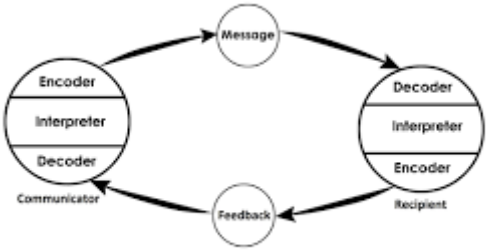

<u>Case Study: Maria and Pedro</u>

Maria and Pedro's case allows understanding of the communication models presented above, as well as the difference between them and also how misunderstanding and interference could have been avoided.

The sender Maria, sent a spoken message over the telephone channel to her husband, Pedro the receiver, who was working on a building site, however, due to a noise, defined as physical disturbance according to Shannon and Weaver (1948/49), such an environment, not allowed the message to reach the receiver as it was sent.

By Schramm (1954), there was no communication, because the circle was not complete, the receiver has not returned the message to the sender, thus lacking the feedback. . The misunderstanding of this message could have been avoided if Pedro had repeated the message to Maria, showing his understanding or whether he had questioned if his understanding was correct since there was a noise interference during the transmission of the message. Allowing the receiver to decrypt the message, interpret and re-encode it before sending the message to a new receiver.

Workplace experience:

In the last term of this course, the teacher informed us about the submission deadline for the presentation task, however, the assessment team emailed us with the dates of submission, and the date for sending it was a later date than the teacher had informed us. Thus, I gave feedback to them by email, asking about the correct deadline. After that, the assessment team apologized because the date informed by email was incorrect, there was a typing error from them. On that occasion, they emailed us a correction of the previous wrong email.

If the communication had been followed by Shannon and Weaver, I would have accepted the information sent by email, which had interference and was incorrect, which could have caused the delay in sending the task by the students, making us fail in this subject.

By Schramm, feedback was essential, making the communication circular and completed, allowing the sender to re-send the message correctly, also permitting the students (receiver) to understand the message and submitted the task on the correct date.

3.3. Berlo's SMCR (1964)

This model expounds on the components that form the basic communication operation: Sender, message, channel, and receiver. These components are affected by many elements, the message is sent by a disparate person, and part of its intent is lost. If the noise happens, it interrupts the message's origin and causes the message to be received partially or not received by the receiver. There is no feedback in this model.

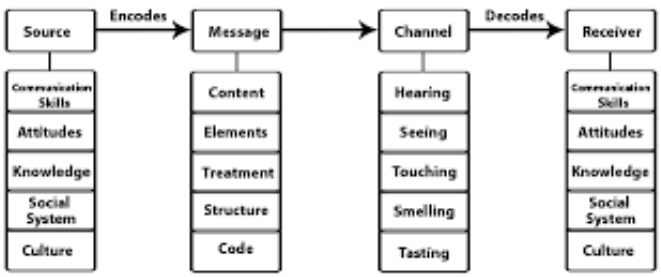

Case Study: The professor and the village people

The professor used a sophisticated and formal language, that was unknown to the people of the village. Due to the different levels of education, the message was not understood, as explained by Berlo. If the professor had used a popular language people might have understood his message, or if at least he had been interested in the local culture of the village by approaching people and breaking this intellectual barrier between them, the village people might have understood the professor's cry for help through non-verbal language, body gestures and facial expression or even approached the teacher asking what was happening.

Workplace experience:

At my workplace, we hired a foreign girl, she had recently arrived in England and spoke good English, but did not know about some Council rules of the county, such as the correct way to dispose of the garbage.

One day, she was working alone and there were many cardboards to dispose of, the boss asked her to discard them at night, presuming that she knew the correct way to dispose of those materials. However, she did not know that, and she placed the cardboard boxes outside, as she used to do in her country, without any label from the responsible for the collection. The morning after, I saw the cardboard boxes discarded outside incorrectly, although, it was too late, as the council supervisor had already placed a penalty.

This situation could have been avoided if our boss had asked her if she was aware of the correct way to dispose of the garbage as the Council demands. Moreover, if he had understood that she had another background, he would have guided her well, and provided basic training about the Council rules that applied to that workplace.

4. Referencing theory from literary sources.

Markovic and Salamzadeh (2018) discussed the importance of communication in business, an example of that at my previous workplace during a company event, the event manager sent a message via WhatsApp to the stock member, which was a diagonal communication, he asked for an urgent replacement of 300 gifts for guests, that must be sent to the filial that same day. However, the team member did not send the gifts, as he waited for the formal order according to company regulations, or an authorization that should have been provided by the stock manager. As the event manager did not use formal and internal communication, this miscommunication causes a huge disruption to the event scrip and a waste of money to pay for delivery of the gifts, making dissatisfaction among the directors and sponsors, according to Kandlousi *et al* (2010), formal and informal communication projected satisfaction with organisational communication.

This situation could be avoided if the event manager had sent a formal request by email to the team member, even if it was a diagonal communication, or whether he had sent the informal message in a horizontal communication, which means, directly to the stock manager, because he could authorize this order urgently. Achieve the satisfaction of all the horizontal, vertical, and even diagonal communicators, as Van Der Ahee (2000) observed. It shows how effective communication is essential in the workplace.

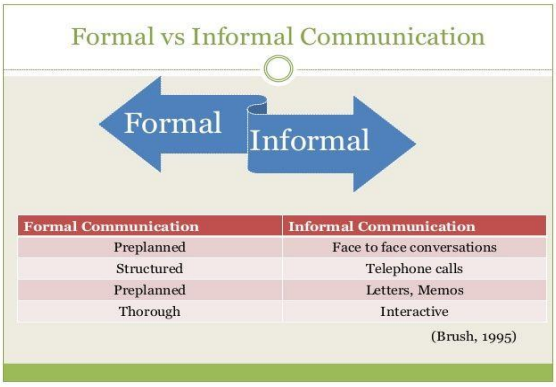

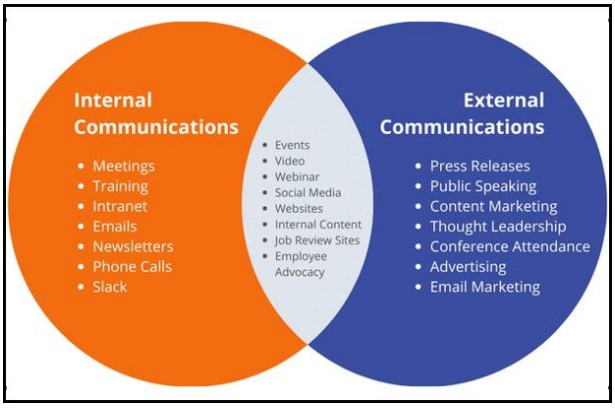

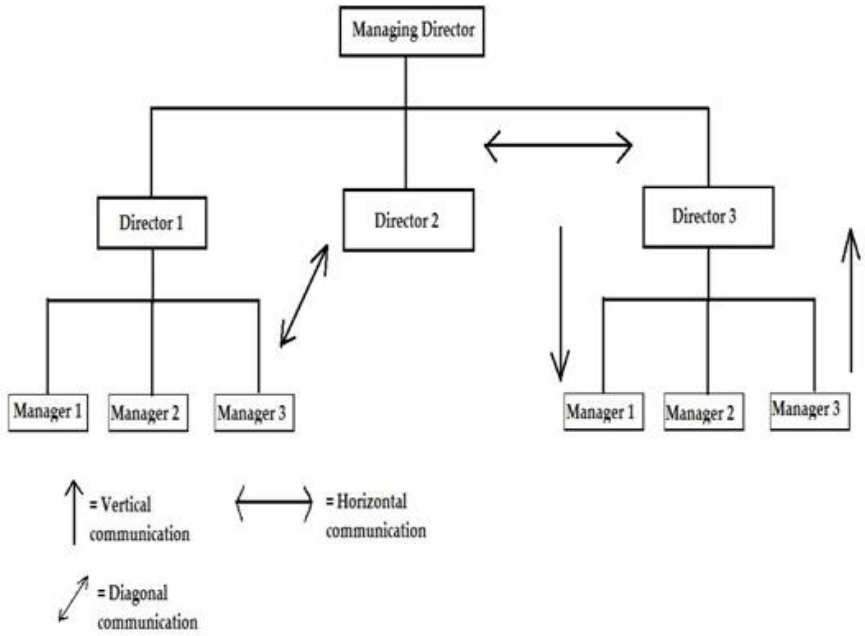

5. Communication Skills

Assertive communication skills are those that can send information with clarity, dynamics, and respect, and the ability to communicate in diverse and complex ways to obtain the expected return. When this objective is achieved, it creates a relationship that allows for dialogue between the parties and greater inter collaboration (Markovic and Salamzadeh, 2018).

5.1. Verbal Communication

It is when the transmission of information is done through words, either in speech or writing. Knowing how to properly use words, tone such as expressions and even conjugations is essential when communicating.

5.2. Non-Verbal Communication

Non-verbal communication is understood as everything that does not use words, for example, body language, being both body movements and facial expressions.

Case study: A Day with the chief.

By analysing this case, it is achievable to understand the importance of verbal and non-verbal communication skills in the workplace. Mark was anxious, due to what he had heard about the chief's personality, even so, Alana was friendly and smiling during the beginning of the conversation, maybe her intensity would make him comfortable. However, Mark misinterpreted the non-verbal communication from the chief and relaxed through body and spoken language, not behaving in a professional manner. Through the chief's final positioning, both in verbal and non-verbal communication, it was possible to understand that she did not like his attitude. Mark should have presented his ideas while maintaining a professional and confident posture in front of the chief.

5.3. Active Listening

Active listening makes conversations more efficient. Based on full dedication to listening and understanding what the sender has to say, active listening allows the receiver to absorb the content of the interlocutor's speech.

Case study: Max the multitasker

Because Max couldn't hire someone to help him, he should have organized himself better, applied time management to his routines, and just as importantly, practice active listening, always. Take one activity at a time, including making telephone calls, paying attention to the message that people want to send to him, without interference or distractions, then writing down all important information in an agenda.

6. The advantages and disadvantages of Technology in Communication

Throughout the history of the evolution of communication, technologies have reinvented the way we communicate, gradually raising it to a level of human connectivity never experienced. The emergence of new technologies and tools allows communication to become increasingly contextualized and fragmented, although, it presents advantages and disadvantages, as below:

Advantages of technology in communication.

- Facilitate organisational communication between all types of channels.
- Promote easy and quick access to the global market.
- It facilitates and enhances organisational group discussion and decision-making.
- Increase productivity.
- Reduction of labour costs.
- Facilitate and promote a huge amount of the organization's database.
- Allow the organizations to be more cost-effective and profitable.
- It creates a new market for job opportunities.
- Enhance all the Health organisations to be more effective and better informed on a global scale.
- Give on-time and factual events on a global scale in case of war and pandemics.

Disadvantages of technology in communication.

- It increases the dependency and over-reliance on the technology used.
- Pushes a huge number of jobs to be redundant.
- Decreases face-to-face communication.
- Lacking new regulations and laws for new communication technologies.
- Leaking of privacy issues and private data.
- Risks of losing organization data and information.
- Risks of hacker's attacks and others like malware, virus, trojans, etc.
- Increases cost to implement and staff training to use the new technologies.
- Social media pushes people to time-wasting in the workplace.
- Can affect personal health conditions like addiction, back pain, eye complication, and other health issues.

7. Conclusion

Communication is not a simple transmission of information, it is a process of interaction between sender and receiver, making something common and understandable. Effective communication becomes an essential tool for the development of organizations in today's competitive market. The implementation of effective internal communication allows the interaction and integration of the entire corporate universe.

Moreover, feedback is also necessary, it is being contemplated as the greatest way of evaluation, allowing monitored how the message was received, making sure that the communication reached the objective and generated the expected attitude.

The technologies in communication recreate a new identity, new habits, and the way individuals relate and communicate. Having great importance in the development of humanity, communication skills are crucial for the effectiveness of the corporate communication process.

8. References

Ahmad, B. (2021) *10 Advantages and Disadvantages of Social Media for Society*. [Online]. Available at: https://www.techmaish.com/advantages-and-disadvantages-of-social-media-for-society/ (Accessed: 29 Abril 2022).

Businesstopia (2018) *Berlo's SMCR Model of Communication*. [Online]. Available at: https://www.businesstopia.net/communication/berlo-model-communication (Accessed: 22 Abril 2022).

Businesstopia (2018) *Shannon and Weaver Model Of Communication.* [Online]. Available at: https://www.businesstopia.net/communication/shannon-and-weaver-model-communication (Accessed: 22 Abril 2022).

Businesstopia (2018) *Schramm's Model of Communication.* [Online]. Available at: https://www.businesstopia.net/communication/schramms-model-communication (Accessed: 22 Abril 2022).

Ismail, N. (2017) *Modern Technology: Advantages and Disadvantages.* [Online]. Available at: http://www.information-age.com/modern-technology-advantages-disadvantages-123465637/ (Accessed: 29 Abril 2022).

Jureddi D.M. and Brahmaiah N. (2016) 'Barriers to Effective Communication', *Journal of English Language and Literature (JOEL)*, 3(2), pp.114-115. Available at: http://joell.in/wp-content/uploads/2016/03/114-115BARRIERS-TO-EFFECTIVE-COMMUNICATION.pdf (Accessed: 25 Abril 2022).

Kandlousi, N. S. E. *et al* (2010) 'Organizational Citizenship Behavior in Concern of Communication Satisfaction: The Role of the Formal and Informal Communication'. *International Journal of Business and Management,* 10, pp. 51-61. Available at: http://saylordotorg-resources.s3.amazonaws.com/wwwresources/site/wp-content/uploads/2013/01/BUS209-2.2.2-OrganizationalCitizenshipBehavior.pdf (Accessed: 02 Maio 2022).

Kunsch, M. K. (2006) 'Comunicação Organizacional: Conceitos e Dimensões dos Estudos e das Práticas' In: MARCHIORI, M. *Faces da Cultura e da Comunicação Organizacional*. São Caetano do Sul: Difusão Editora, pp.167-190.

Marka Results (2021) *Conheça os Impactos Causados Pela Má Comunicação.* [Online]. Available at: https://markaresult.com.br/conheca-os-impactos-causados-pela-ma-comunicacao (Accessed: 29 Abril 2022).

Markovic, M. R. and Salamzadeh, A. (2018) *The Importance of Communication in Business Management.* [Online]. Available at: file:///C:/Users/xandy/Downloads/SSRN-id3578378.pdf (Accessed: 02 Maio 2022).

Marque, J.R. (2016) 'A Importancia da Comunicacao Eficaz nas Organizacoes', *Instituto Brasileiro de Couching*. Available at: https://www.ibccoaching.com.br/portal/rh-gestao-pessoas/importancia-comunicacao-eficaz-organizacoes/. (Accessed: 25 Abril 2022).

Mirro (2021) *Why is Feedback Important in the Communications Process: Types of Feedback and How to Increase Performance at Work by Correct Evaluation.* [Online]. Available at: https://mirro.io/blog/feedback/why-is-feedback-important-in-the-communication-process-types-of-feedback-and-how-to-increase-performance-at-work-by-correct-evaluation/ (Accessed: 27 Abril 2022).

Ramey, K. (2012) *Advantages and Disadvantages of Communication Technology in an Organization*. [Online]. Available at: https://www.useoftechnology.com/advantages-disadvantages-communication-technology-organization/ (Accessed: 25 Abril 2022).

Van Der Ahee, L. (2000) *The Correlation Between Employee Satisfaction, Vertical and Horizontal Communication.* [Online]. Available at: *https://journals.co.za/doi/epdf/10.10520/EJC27559* (Accessed: 02 Maio 2022).

Yiga, P. (2017) *Advantages and Disadvantages of Communication Technology in an Organization.* [Online]. Available at https://www.yosaki.com/advantages-and-disadvantages-of-communication-technology-in-an-organization/ (Accessed: 01 Maio 2022).