Prifysgol Cymru
Y Drindod Dewi Sant
University of Wales
Trinity Saint David

APPENDIX GA36a

LEVEL 4 ASSESSMENT SPECIFICATION

Student name:		**Student ID number:**	
Programme:	**Advanced Manufacturing Operations / Engineering Management**		
Module:	**L4 – Quality & Business Improvements**		
Module code:	**ACMA4004**	**Contribution to Overall Module Assessment (%):**	**50%**
Lecturer:	**Jordan Jenkins**	**Internal Verifier:**	**Richard Morgan**
Assignment Title:	**Quality Tools & Root Cause Analysis**	**Word count (or equivalent):**	**2000**
Submission deadline:	**31/03/2022**	**Return date of provisional marks & written feedback:**	**02/05/2022**
Submission method:	All written assessments, where practical and possible, must be submitted via Turnitin unless otherwise instructed by the Lecturer. (Please DO NOT put this assessment specification into Turnitin or it will match many similarities with other students' submissions.) **Alternative submission method (if applicable):** **Late submission of the assessment will result in a late penalty mark.** Penalties for late submission: Up to one week late, maximum mark of 40%. Over one week late, 0%. Only the Extenuating Circumstances Panel may approve a change to submission dates.		
Academic honesty / referencing:	Academic honesty is required. In the main body of your submission you must give credit to authors on whose research and ideas your work is based. Append to your submission a reference list that indicates the books, articles, etc. that you have used, cited or quoted in order to complete this assessment.		

Module Learning Outcomes (From module syllabus)
1. Apply a range of tools and techniques that can be used to investigate problems, assess risk, and analyse areas for improvement.

TASK DESCRIPTION

You must select **one** of the options listed below – Option 2 is intended for use by individuals who do not have sufficient access to relevant data / information within their workplace. Please **do not** attempt to complete both options.

Option 1

You are required to develop an improvement plan for an application / process / operation of your choice (**within your workplace**). It is required that the developed plan is data driven / informed. The following steps should be discussed in detail in your written report:

- Identification of the scope for improvement / problem statement
- Data collection (including collection methods)
- Data analysis
- Root cause analysis
- Action plan

2000 words maximum word count (or equivalent)

Option 2

You are an engineer working within a kaizen team to develop an improvement plan for a problematic manufacturing process. It is required that the developed plan is data driven / informed. The component being manufactured is a valve housing / body for a trunnion ball valve used in chemical refining (see fig.3).

The manufacturing process for the valve body is summarised below:

1. Investment (lost wax) casting process
2. Turning process (lathe) for finishing of flange mating surfaces (highlighted green in Fig.1-2)
3. Milling process (vertical machining centre) for finishing of top flange surfaces (highlighted red in Fig.1-2)

Two foundry workers (A&B), work independently of each other to produce the castings and two machine operators (C&D) work independently of each other at the machine-shop to finish the component (Operator C performs the turning process & Operator D performs the milling process).

Using appropriate quality tools, identify the problems, analyse the data (provided below) and develop a prioritised corrective action plan to improve the process and reduce the risk of continued occurrence of defects.

A suggested structure for your report is as follows:

- Problem identification / problem statement
- Data summary (the data has been collected and is presented in table 1)
- Data analysis
- Root cause analysis
- Suggested action/improvement Plan

Clearly sate any assumptions which you have made in your introduction.

2000 words maximum word count (or equivalent)

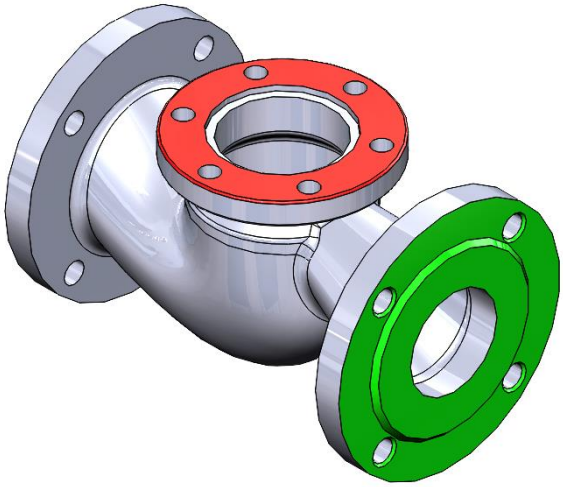

Figure 1: Valve Housing (front isometric view) - Turned Surfaces = Green – Milled Surfaces = Red

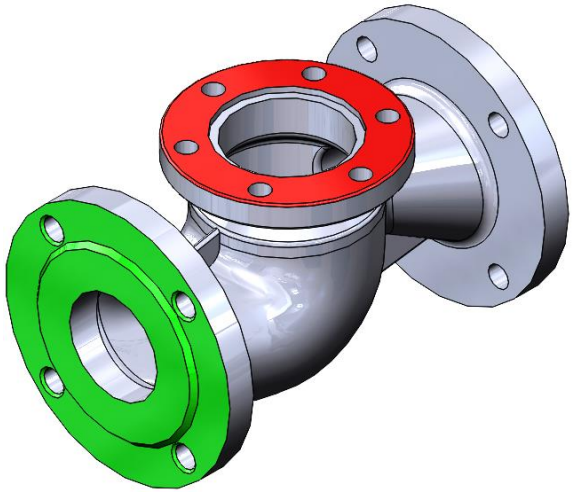

Figure 2: Valve Housing (Rear Isometric View) - Turned Surfaced = Green – Milled Surfaces = Red

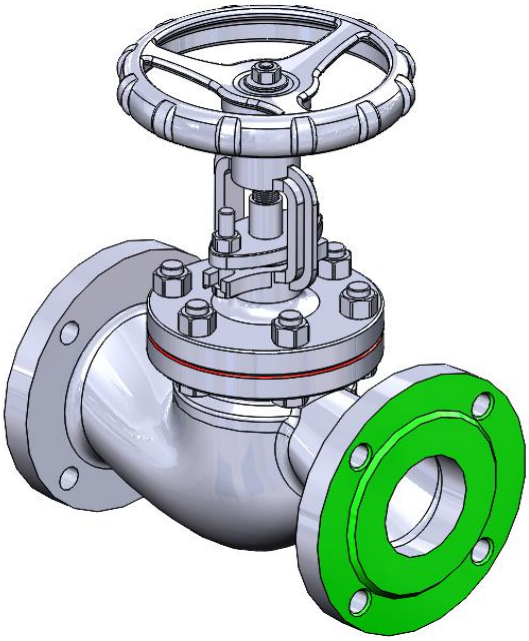

Figure 3: Assembly Drawing - (illustrative purposes only)

VALVE HOUSING – PROCESS DEFECT DATA

Equipment	Worker	Monday		Tuesday		Wednesday		Thursday		Friday		Saturday	
		am	pm	am	pm	am	pm	am	pm	am	pm	am	pm
Operation 1 (Investment Casting)	A	♦♦♦X X	♦♦XX	♦♦♦	●●□	♦♦♦♦♦	♦♦♦♦ XXX	♦♦♦	♦♦●●	♦♦♦ ● ●	♦♦♦ □	♦♦ ● ●	□□♦♦
	B	♦♦♦X X	♦♦ XX	♦♦X	♦♦♦♦● ●	♦♦♦♦● ●●●	♦♦♦♦ ♦XX	♦♦♦● ●	♦♦♦● ●	♦♦♦● ●●□□	♦♦●● ●□□	□□♦♦♦ XX	XXX♦♦ □□
Operation 2 (Machining Turning/ Milling)	C	OOOX X●●	OOXX	OOOO	OOXXX	OOOOX XXX●●	OOOO XXXX	OOOO XXXX● ●●	OOXX X	OOOO	OOO□	OO	XXX●●
	D	OOXX X●●	OOOO OXXX	OOOO OOOX XX	OOOOX XX	OOOO XXX●● ● □	OOOO OOOX X●●	OOOO OOXX	OOOO XX●● ●	OOOX XX●●	OOOO OO	OOOXX	OOOO OO●● XX

Legend:

O Burring ♦ Porosity X Poor Surface Finish ● Improper Geometry/Shape □ Others

Table 1: Collected Defect Data for Valve Housing Manufacturing Process

GUIDANCE FOR STUDENTS IN THE COMPLETION OF TASKS

NOTE: The guidance offered below is linked to the five generic assessment criteria overleaf.

1. Engagement with Literature Skills

The marks for this section will be determined by evaluating the quantity and relevance of references/citations applied along with the extent to which research is used to inform the conclusions and decisions made throughout the coursework.

Your work must be informed and supported by scholarly material that is *relevant* to and *focused* on the task(s) set. You should provide evidence that you have accessed an appropriate *range* of sources, which may be academic, governmental and industrial; these sources may include academic journal articles, textbooks, current news articles, organisational documents, and websites. You should consider the *credibility* of your sources; academic journals are normally highly credible sources while websites require careful consideration/selection and should be used sparingly. Any sources you use should be current and up-to-date, mostly published within the last five years or so, though seminal/important works in the field may be older. You must provide *evidence* of your research/own reading throughout your work, using a suitable referencing system, including in-text citations in the main body of your work and a reference list at the end of your work.

2. Knowledge and Understanding Skills

The marks for this section will be determined by evaluating the prioritized action plan along with the suitability and appropriateness of any corrective actions or recommendations made. These should be elaborated on/discussed in your report.

At level 4, you should be able to demonstrate knowledge of the underlying concepts and principles associated with your area(s) of study. *Knowledge* relates to the facts, information and skills you have acquired through your learning. You demonstrate your *understanding* by interpreting the meaning of the facts and information (knowledge). This means that you need to select and include in your work the concepts, techniques, models, theories, etc. appropriate to the task(s) set. You should be able to explain the theories, concepts, etc. to show your understanding. Your mark/grade will also depend upon the *extent* to which you demonstrate your knowledge and understanding.

3. Cognitive and Intellectual Skills (defence and evaluation of designs)

The marks for this section will be awarded based upon the extent to which numeric / data analysis techniques, calculations are applied and documented as problem, investigation process. Examples include: Pareto Analysis, Scatter Diagrams, Histograms or Flow Charts.

You should be able to present, evaluate and interpret qualitative and quantitative data, in order to develop lines of argument and make sound judgements in accordance with basic theories and concepts of your subject(s) of study. You should be able to evaluate the appropriateness of different approaches to solving problems related to your area(s) of study and/or work. Your work must contain evidence of logical, analytical thinking. For example, to examine and break information down into parts, make inferences, compile, compare and contrast information. This means not just describing what! But also justifying: Why? How? When? Who? Where? At what cost? You should provide justification for your arguments and judgements using evidence that you have reflected upon the ideas of others within the subject area and that you are able to make sound judgements and arguments using data and concepts. Where relevant, alternative solutions and recommendations may be proposed.

4. Practical Skills

The marks for this section will be determined by evaluating the extent to which you have been able to apply Root Cause Analysis concepts tools to determine likely underlying issues.

At level 4, you should be able to apply the basic underlying concepts and principles to evaluate and interpret these within the context of your area of study. You should be able to demonstrate how the subject-related concepts and ideas relate to real world situations and/or a particular context. How do they work in practice? You will deploy models, methods, techniques, and/or theories, in that context, to assess current situations, perhaps to formulate plans or solutions to solve problems, or to create artefacts. This is likely to involve, for instance, the use of real world artefacts, examples and cases, the application of a model within an organisation and/or benchmarking one theory or organisation against others based on stated criteria.

5. Transferable Skills for Life and Professional Practice

The marks for this section will be determined by the presentation, structure/layout and writing style used to compile your report.

Your work must provide evidence of the qualities and transferable skills necessary for employment requiring the exercise of some personal responsibility. This includes demonstrating: that you can communicate the results of your study/work accurately and reliably, and with structured and coherent arguments; that you can initiate and complete tasks and procedures, whether individually and/or collaboratively; fluency of expression; clarity and effectiveness in presentation and organisation. Work should be coherent and well-structured in presentation and organisation.

STUDENT FEEDBACK FORM

This section details the *extent* to which the assessment criteria are demonstrated by you, which in turn determines your mark. The marks available for each category of skill are shown. Lecturers will use the space provided to comment on the achievement of the task(s), including those areas in which you have performed well and areas that would benefit from development/improvement.

Generic Assessment Criteria	**Marks available**	**Marks awarded**
1. Engagement with Literature Skills		
The marks for this section will be determined by evaluating the quantity and relevance of references/citations applied along with the extent to which research is used to inform the conclusions and decisions made throughout the coursework.	15	
2. Knowledge and Understanding Skills		
The marks for this section will be determined by evaluating the action/improvement plan along with the suitability and appropriateness of any corrective actions or recommendations made. These should be elaborated on/discussed in your report.	25	
3. Cognitive and Intellectual Skills		
The marks for this section will be awarded based upon the extent to which numeric / data analysis techniques, calculations are applied and documented as problem, investigation process. Examples include: Pareto Analysis, Scatter Diagrams, Histograms or Flow Charts.	25	
4. Practical Application Skills		
The marks for this section will be determined by evaluating the extent to which you have been able to apply Root Cause Analysis concepts tools to determine likely underlying issues.	25	
5. Transferable Skills for Life and Professional Practice		
The marks for this section will be determined by the presentation, structure/layout, fluency and writing style used to compile your report.	10	

Assessment Mark (Assessment marks are subject to ratification at the Exam Board. These comments and marks are to give feedback on module work and are for guidance only until they are confirmed.)	**Late Submission Penalties (tick if appropriate)**		**%**
	Up to 1 week late (40% Max)		
	Over 1 week late (0%)		

GENERIC ASSESSMENT CRITERIA

Level 4
In accordance with the Framework for Higher Education Qualifications, at the end of Level 4 students will be expected to have demonstrated knowledge of the basic underlying concepts and principles of a subject, and an ability to evaluate and interpret these within the context of that area of study. They should be able to present, evaluate and interpret qualitative and quantitative data in order to develop lines of argument and make sound judgements in accordance with basic theories and concepts of their subject(s) of study. They will have learned how to evaluate different approaches to solving problems, and will be able to communicate the results of their study/work accurately and reliably, and with structured and coherent arguments. They will be able to undertake further training and develop new skills within a structured and managed environment and will have the qualities and transferable skills necessary for employment requiring the exercise of some personal responsibility.

Level 4	FAIL	MARGINAL FAIL	SATISFACTORY (3rd / Pass)	GOOD (2.2 / Pass)	VERY GOOD (2.1 / Merit)	EXCELLENT (1st / Distinction)	EXCEPTIONAL (1st / Distinction)
Category	**0-29%**	**30-39%**	**40-49%**	**50-59%**	**60-69%**	**70-84%**	**85-100%**
Engagement with literature (including reading, referencing, academic conventions and academic honesty)	Little or no evidence of reading and/or reliance on inappropriate sources. Views and findings mostly unsupported and non-authoritative. Referencing conventions used incoherently or largely absent.	Poor engagement with essential reading. No evidence of wider reading. Reliance on inappropriate sources, and/or indiscriminate use of sources. Heavily reliant on information gained through class contact. Inconsistent and weak use of referencing.	Engagement with a limited range of mostly relevant and credible sources but with some reliance on information gained through class contact. Some omissions and minor errors. Referencing conventions evident though not always applied accurately or consistently.	Engagement with an appropriate range of literature, including sources retrieved independently. Some over-reliance on texts rather than other sources. Referencing may show minor inaccuracies or inconsistencies.	Engagement with a wide range of literature, including sources retrieved independently. Selection of relevant and credible sources. Generally sound referencing, with no/very few inaccuracies or inconsistencies.	Engagement with an extensive range of relevant and credible literature. Consistently accurate application of referencing.	Exceptional engagement with an extensive range of relevant and credible literature. High-level referencing skills consistently applied.
Knowledge and understanding (Knowledge of the basic underlying concepts and	Major gaps in knowledge and understanding of the basic underlying concepts and	Gaps in knowledge of the basic underlying concepts and principles, with flawed or	Limited knowledge and understanding of the basic underlying concepts and	Knowledge of the basic underlying concepts and principles is accurate with a	Competent knowledge of the basic underlying concepts and principles. Exhibits very	Excellent knowledge and understanding of the basic underlying concepts and	Exceptional, detailed knowledge and understanding of the basic underlying

Level 4	FAIL	MARGINAL FAIL	SATISFACTORY (3rd / Pass)	GOOD (2.2 / Pass)	VERY GOOD (2.1 / Merit)	EXCELLENT (1st / Distinction)	EXCEPTIONAL (1st / Distinction)
Category	**0-29%**	**30-39%**	**40-49%**	**50-59%**	**60-69%**	**70-84%**	**85-100%**
principles of a subject.)	principles of the subject matter. Inclusion of irrelevant material. Substantial inaccuracies.	superficial understanding. Some significant inaccuracies and/or irrelevant material.	principles within the subject area. Some elements may be missing.	good understanding of the field of study but lacks depth and/or breadth.	good understanding.	principles of the subject.	concepts and principles
Cognitive and intellectual skills (Evaluate underlying concepts and principles of a subject and interpret qualitative and quantitative data in order to develop lines of argument and make sound judgements.)	Wholly or almost wholly descriptive work. Little or no evaluation of the underlying concepts and principles. Failure to develop arguments, leading to illogical or invalid judgements. Minimal or no use of evidence to back up views.	Largely descriptive work, with superficial evaluation of the underlying concepts and principles. Weak interpretation of data, flawed development of arguments and judgements. Information accepted uncritically, uses generalised statements made with scant evidence and unsubstantiated opinions. Ideas sometimes illogical and contradictory.	Limited attempt at evaluation of the underlying concepts and principles, tending towards description. Can interpret qualitative and quantitative data but with some errors. Some evidence to support emerging arguments and judgements but these may be underdeveloped or with a little inconsistency / mis-interpretation.	Good evaluation of the underlying concepts and principles. Can interpret qualitative and quantitative data, with minor errors. An emerging ability to use evidence to support the argument. Mostly valid arguments and logical judgements.	Sound evaluation of the underlying concepts and principles. Can interpret qualitative and quantitative data accurately. Ability to devise arguments using evidence to make mostly appropriate and valid judgements.	Excellent evaluation of the underlying concepts and principles. Can interpret qualitative and quantitative data accurately and with some insight. Excellent ability to devise arguments using evidence and make appropriate and valid judgements.	Exceptional evaluation of the underlying concepts and principles based evidence. Outstanding interpretation of qualitative and quantitative data. Exceptional ability to devise arguments using evidence and make wholly appropriate and valid judgements.
Practical skills (Different approaches to solving problems in particular contexts.)	Limited or no use of taught, basic methods, materials, tools and/or techniques. Little or no appreciation of the context of the application.	Rudimentary application of taught, basic methods, materials, tools and/or techniques but without consideration and	An adequate awareness and mostly appropriate application of basic methods, materials, tools and/or techniques.	A good and appropriate application of basic methods, materials, tools and/or techniques. Clear appreciation of	A very good application of a range of basic methods, materials, tools and/or techniques. Very good consideration of the context of	An advanced application of a range of taught, basic methods, materials, tools and/or techniques. The context of the application is	Exceptional levels of application and deployment skills in particular practical contexts. Outstanding identification of

Level 4	FAIL	MARGINAL FAIL	SATISFACTORY (3rd / Pass)	GOOD (2.2 / Pass)	VERY GOOD (2.1 / Merit)	EXCELLENT (1st / Distinction)	EXCEPTIONAL (1st / Distinction)
Category	**0-29%**	**30-39%**	**40-49%**	**50-59%**	**60-69%**	**70-84%**	**85-100%**
	Very weak evidence of different approaches to problem-solving in particular contexts.	competence. Flawed appreciation of the context of the application. Weak evidence of different approaches to problem-solving in particular contexts.	Basic appreciation of the context of the application. Can identify problems in particular contexts and propose basic alternative approaches or solutions though there may be errors.	the context of the application. Good evidence of different approaches to problem-solving in particular contexts and proposes mostly appropriate solutions.	the application. Very good evidence of different approaches to problem-solving in particular contexts and proposes appropriate solutions.	well considered, and insightful. Excellent evidence of different approaches to problem-solving in particular contexts and proposes appropriate solutions.	problems in particular contexts and formulation of wholly appropriate, thoughtful solutions / different approaches.
Transferable skills for life and professional practice (Communicate the results of their study/work accurately and reliably, and with structured and coherent arguments; the qualities needed for employment requiring the exercise of some personal responsibility within a structured and managed environment.)	Work is poorly structured, disorganised, inaccurate and/or confusingly expressed. Very weak use of language and/or very inappropriate style. Failure to work effectively individual or as part of a group. Little or no evidence of the skills for employment requiring the exercise of some personal responsibility.	Work is poorly presented in a disjointed manner. It is loosely, and at times incoherently, structured, with information and ideas often poorly expressed. Weak use of language and/or inappropriate style. Flawed approach to individual or group work, meeting only partial obligations to others. Limited evidence of the skills for employment requiring the	Mostly ordered presentation and structure in which relevant ideas / concepts are reasonably expressed. Work may lack coherence and/or accuracy in places. Can work as part of a group, meeting most obligations to others but perhaps with limited involvement in group activities. Demonstrates the basic skills for employment requiring the exercise of some personal responsibility, with some areas	Mostly coherent, organised and accurate work, in a suitable structure and is for the most part clearly expressed. Can work effectively independently and/or as part of a team, with clear contribution to group activities. Demonstrates the skills for employment requiring the exercise of some personal responsibility, with some areas of strength and some of minor weakness.	Work is accurate, coherent, fluent, well-structured and organised. Can work effectively independently and/or as part of a team, with very good contribution to group activities. Demonstrates very good skills for employment requiring the exercise of some personal responsibility, with just occasional minor weakness.	Work is coherent, very fluent and is presented professionally. Can work effectively independently and/or as part of a team, with an excellent contribution to group activities. Demonstrates excellent skills for employment requiring the exercise of some personal responsibility with an appetite for further development.	Work is accurate, exceptionally coherent, very fluent and presented well. Can work effectively independently and/or as part of a team, with an exceptional contribution to group activities. Demonstrates exceptional skills for employment requiring the exercise of some personal responsibility with an appetite for further development.

Level 4	FAIL	MARGINAL FAIL	SATISFACTORY (3rd / Pass)	GOOD (2.2 / Pass)	VERY GOOD (2.1 / Merit)	EXCELLENT (1st / Distinction)	EXCEPTIONAL (1st / Distinction)
Category	**0-29%**	**30-39%**	**40-49%**	**50-59%**	**60-69%**	**70-84%**	**85-100%**
		exercise of some personal responsibility.	of minor weakness.				

THIS DOCUMENT IS ALSO AVAILABLE IN WELSH