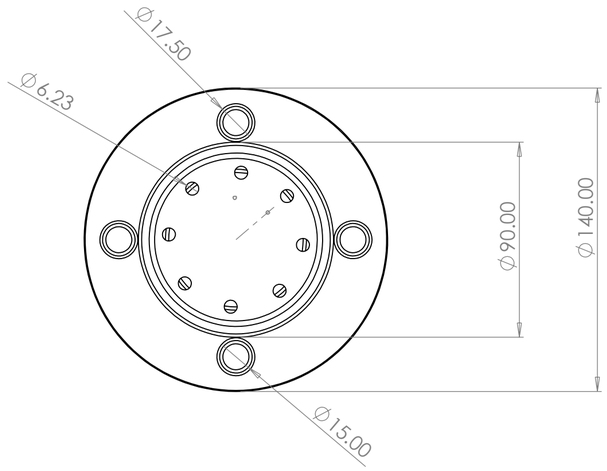


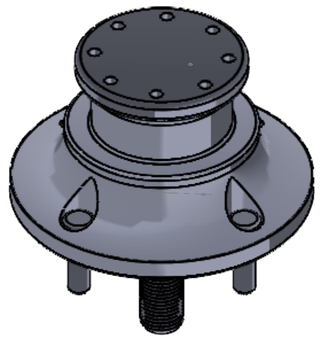

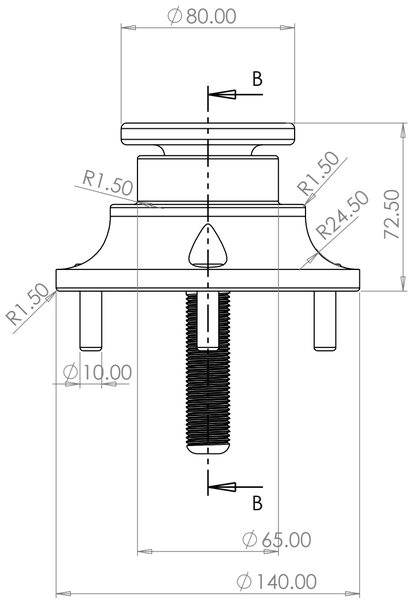


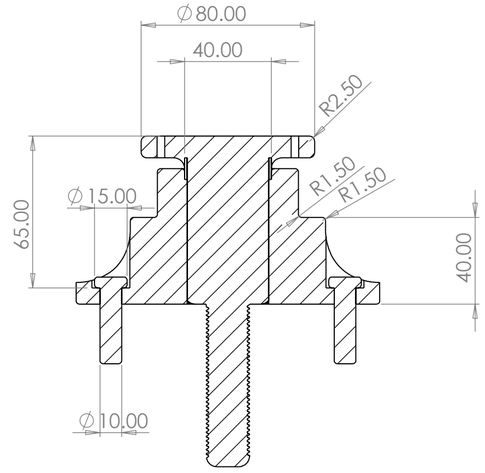


SECTION B-B

| | | | | | | | |
|---|---|---|---|---|---|---|---|
| UNLESS OTHERWISE SPECIFIED:<br>DIMENSIONS ARE IN MILLIMETERS<br>SURFACE FINISH:<br>TOLERANCES:<br>LINEAR:<br>ANGULAR: | FINISH: | | | DEBURR AND BREAK SHARP EDGES | DO NOT SCALE DRAWING | | REVISION |
| | NAME | SIGNATURE | DATE | | TITLE: | | |
| DRAWN | | | | | | | |
| CHK'D | | | | | | | |
| APPV'D | | | | | | | |
| MFG | | | | | | | |
| Q.A | | | | MATERIAL: | DWG NO. Assem1 DRAWING | | A2 |
| | | | | WEIGHT: | SCALE:1:2 | SHEET 1 OF 1 | |

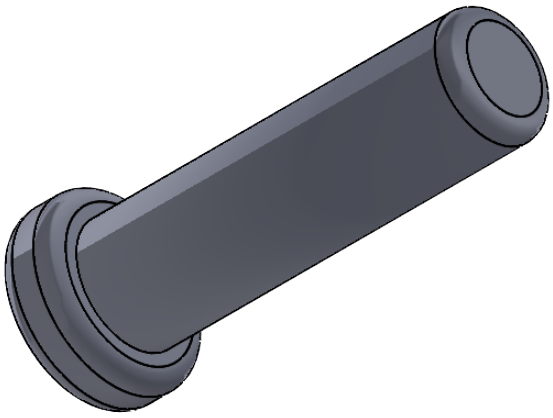

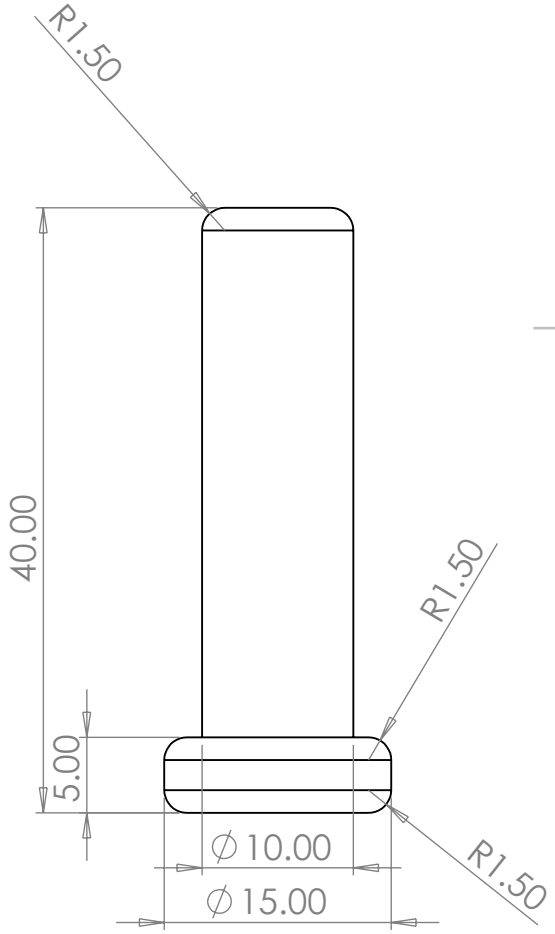


| | | | |
|---|---|---|---|
| UNLESS OTHERWISE SPECIFIED:<br>DIMENSIONS ARE IN MILLIMETERS<br>SURFACE FINISH:<br>TOLERANCES:<br>LINEAR:<br>ANGULAR: | FINISH: | DEBURR AND BREAK SHARP EDGES | DO NOT SCALE DRAWING / REVISION |

| | NAME | SIGNATURE | DATE |
|---|---|---|---|
| DRAWN | | | |
| CHK'D | | | |
| APPV'D | | | |
| MFG | | | |
| Q.A | | | |

TITLE:

MATERIAL:

WEIGHT:

DWG NO.

# drive .stud drawing

A4

SCALE:2:1

SHEET 1 OF 1

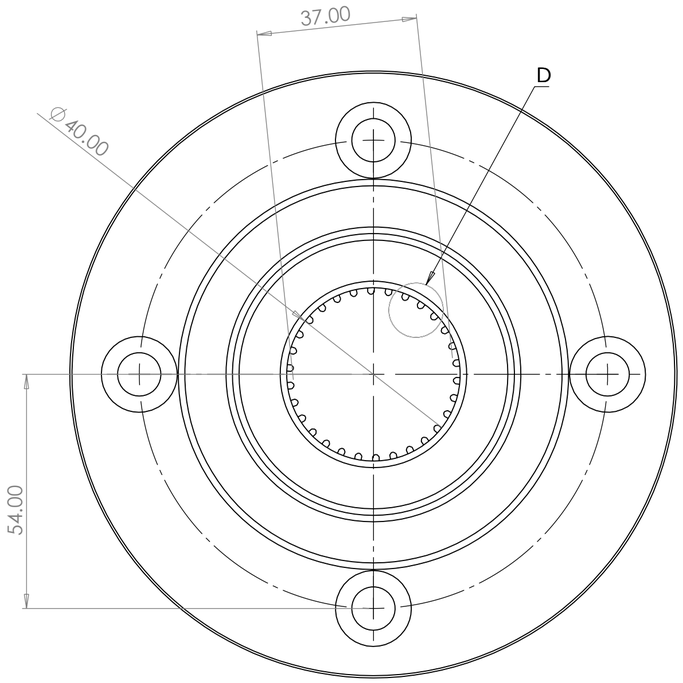


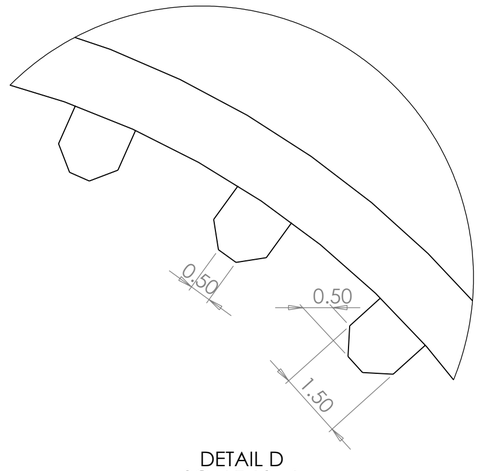


DETAIL D
SCALE 10 : 1

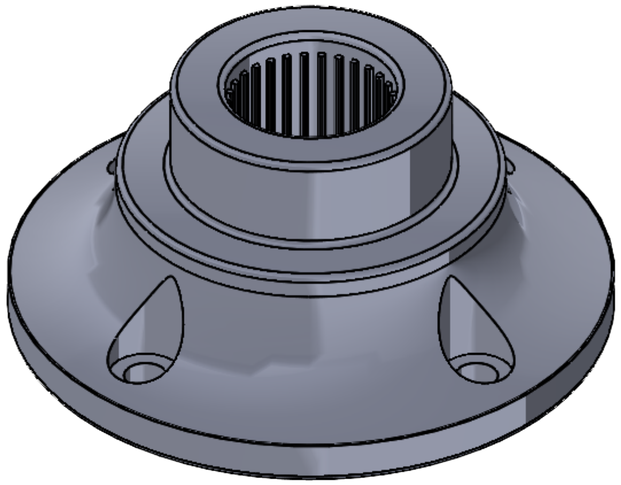

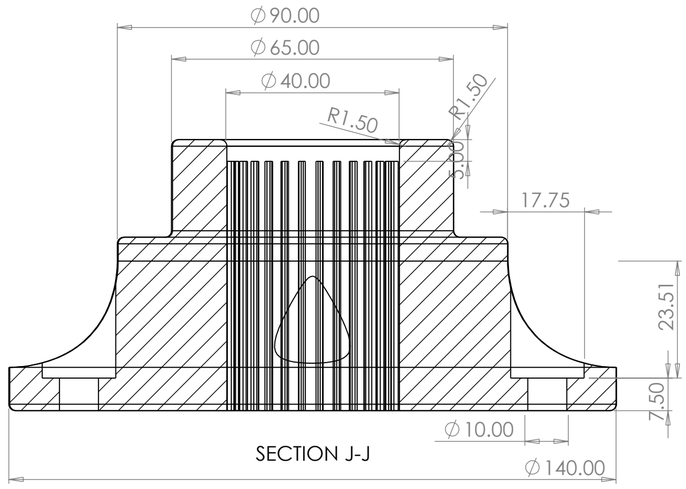


SECTION J-J

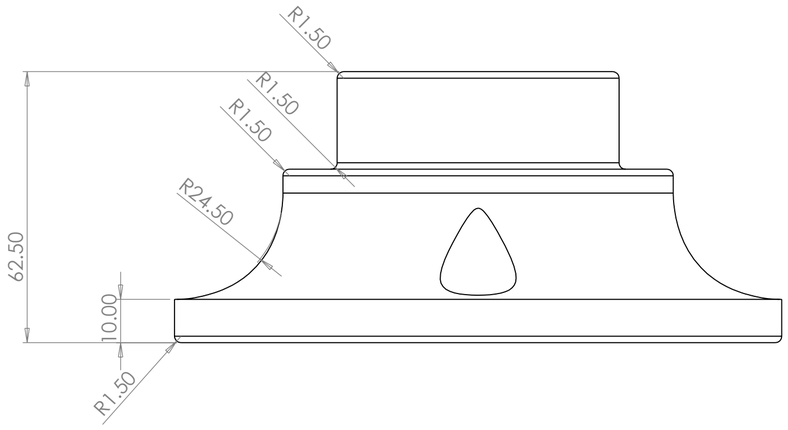


| | | | | | | |
|---|---|---|---|---|---|---|
| UNLESS OTHERWISE SPECIFIED:<br>DIMENSIONS ARE IN MILLIMETERS<br>SURFACE FINISH:<br>TOLERANCES:<br>LINEAR:<br>ANGULAR: | FINISH: | | | DEBURR AND BREAK SHARP EDGES | DO NOT SCALE DRAWING | REVISION |
| | NAME | SIGNATURE | DATE | | TITLE: | |
| DRAWN | | | | | | |
| CHK'D | | | | | | |
| APPV'D | | | | | | |
| MFG | | | | | | |
| Q.A | | | | MATERIAL: | DWG NO. drive flange | A2 |
| | | | | WEIGHT: | SCALE:1:1 | SHEET 1 OF 1 |

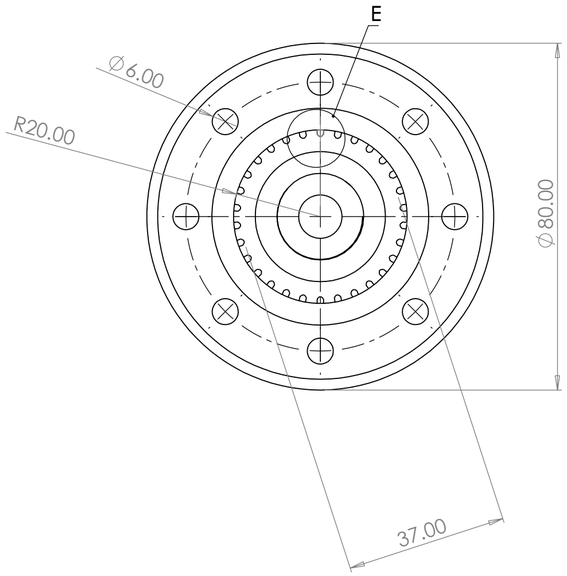


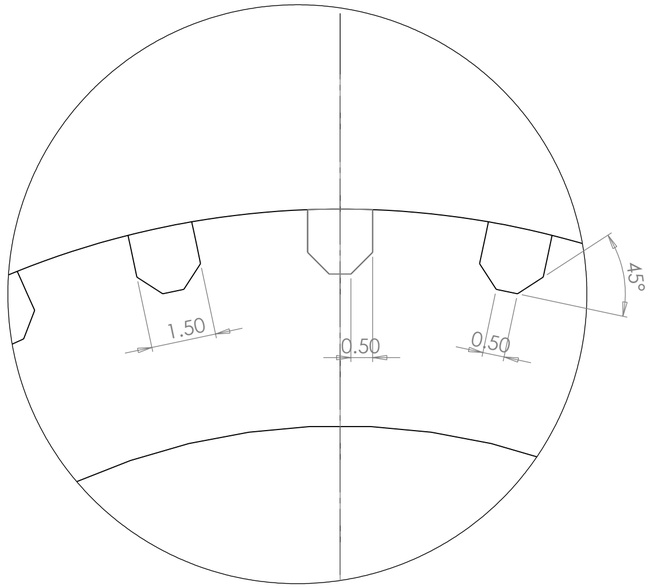


DETAIL E
SCALE 10 : 1

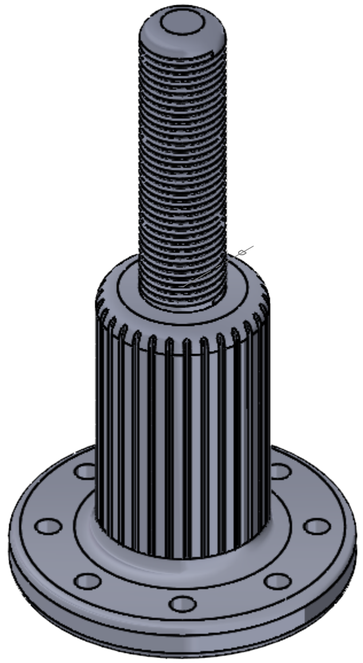

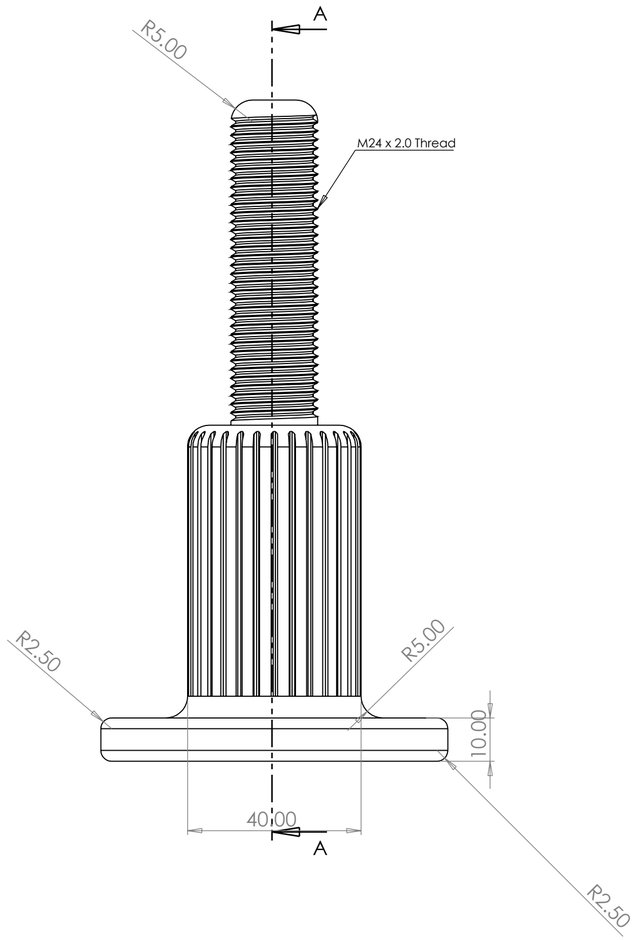


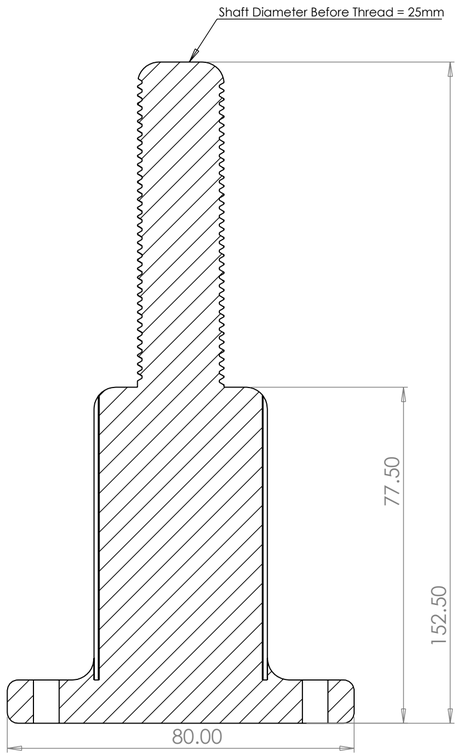


SECTION A-A
SCALE 1 : 1

| | | | | | | | |
|---|---|---|---|---|---|---|---|
| UNLESS OTHERWISE SPECIFIED: DIMENSIONS ARE IN MILLIMETERS SURFACE FINISH: TOLERANCES: LINEAR: ANGULAR: | FINISH: | | | DEBURR AND BREAK SHARP EDGES | | DO NOT SCALE DRAWING | REVISION |
| | NAME | SIGNATURE | DATE | | | TITLE: | |
| DRAWN | | | | | | | |
| CHK'D | | | | | | | |
| APPV'D | | | | | | | |
| MFG | | | | | | | |
| Q.A | | | | MATERIAL: | | DWG NO. stud axel drawing | A2 |
| | | | | WEIGHT: | | SCALE:1:2 | SHEET 1 OF 1 |