EVALUATING THE IMPACT OF FRICTION STIR WELDING ON AN ALUMINIUM ALLOY STRUCTURE

Jake Mowbray

A Dissertation Submitted to the School of Engineering

University of Wales Trinity Saint David

In Partial Fulfilment of the Requirements for the

Degree of Master of Science in Mechanical Engineering

Prifysgol Cymru
Y Drindod Dewi Sant
University of Wales
Trinity Saint David

EVALUATING THE IMPACT OF FRICTION STIR WELDING ON AN ALUMINIUM ALLOY STRUCTURE

Wales Institute of Science and Art
School of Engineering

MSc Mechanical Engineering
Major Project Dissertation
M7X01373

Student Name: Jake Mowbray
Student Number: 1603023
Supervisor: Andrew Thorn
Date: April 2021

Abstract

This research project investigates the structural design optimisation possibilities available through the use of Friction Stir Welding. An evaluation of current production methods reveals the need to increase structural aluminium welding capacity in order to alleviate bottlenecking within the fabrication process. Aluminium alloy 6082-T6 plate welding specimens are produced by Friction Stir Welding, Gas Tungsten Arc Welding and Gas Metal Arc Welding processes; material testing samples were taken from the specimens and destructive evaluation was carried out. FSW delivered an ultimate tensile strength of 222MPa and a yield strength of 120MPa with a 116mm/min welding traverse rate and a 450rpm tool rotation speed. The values constitute a 70% joint efficiency which is a sizeable improvement on the 55% joint efficiency of the GTAW process that is currently utilised. FSW delivered a 12% increase in retention of original material hardness post-welding due to reduced heat exposure. Hardness retention correlates with higher tensile strength; heat from the welding process initiates microstructure grain growth, softening the material. Welding temperatures circa 400°C were observed during FSW, which is below the alloy's melting point. Stress analysis and topology optimisation models have been validated and used to inform the redesign of a structure to be jointed with FSW; a 63% reduction in material is observed in a single corner gusset component where no optimisation was previously available, when using conventional welding processes. A cost analysis relating to the corner gusset reveals a 47.8% cost reduction through utilising FSW in place of current methods. Recommendations are made to see the implementation of FSW at a facility-based level and a companywide level. This report forms the first official record of FSW being utilised within the company.

Acknowledgements

The path I have taken to further my education has provided me with countless insightful experiences which have shaped me academically, I feel that learning is indeed a lifelong process. I would like to take this opportunity to thank the UWTSD engineering lecturers for providing direction and sharing their knowledge; my project supervisor in particular, for his dedication in enabling academic progression of individuals in full time employment. For allowing me the time and resources to conduct my studies, I thank QinetiQ and my most recent manager. I would like to thank my fellow classmates for their commitment to supporting me and each other. To my partner, I pay thanks for her resilience and support during the course of my studies.

Declaration Statement

This report is the result of the author's original research. It has been composed by the author and has not been previously submitted for examination which has led to the award of a degree at any institution.

Signed:

Date: 14/04/2021

Contents

Abstract i
Acknowledgements ii
Declaration Statement iii
List of Figures vii
List of Tables ix
List of Appendices x
Abbreviations xi
1. Introduction 1
1.1 Project Introduction 1
1.2 Company Background 1
1.3 Project Aim 2
1.4 Project Objectives 2
1.5 Current Methods 3
1.5.1 Manufactured Products 3
1.5.2 Acknowledged Issues 7
1.5.3 Current Welding Processes 9
1.6 Project Proposal 11
1.6.1 Cost Saving and Capacity 11
1.6.2 Innovation 11
1.6.3 Research 11
1.6.4 Idea Generation 12
1.7 Project Planning 13
1.8 Roles and Responsibilities 14
1.9 Timescale and Budget 15
1.10 Root Cause Analysis 16
2. Literature Review 17
3. Methodology 22
3.1 Reasoning 22
3.2 Project Strategy 22
3.2.1 SWOT Analysis 22
3.2.2 Failure Mode Effect Analysis 24
3.2.3 Requirement Traceability Matrix 27
3.2.4 House of Quality 31

3.2.5 Summary of Analyses 33
3.3 Project Enablement 34
3.3.1 Safety 34
3.3.1.1 Risk Assessment 34
3.3.1.2 Competency 34
3.3.1.3 Reporting 34
3.3.2 Material Composition 40
3.3.3 Equipment 43
3.3.4 Welding Parameters 44
3.3.5 FSW Tooling 44
3.3.5.1 Design 44
3.3.5.2 Manufacture 46
3.3.5.3 Inspection 47
3.3.6 Fixture Design 48
3.3.6.1 Design 48
3.3.6.2 Manufacture 49
3.3.6.3 Inspection 49
3.4 FSW Trials 51
3.4.1 Setup Parameters 51
3.4.2 Observations 57
3.4.3 Failures 57
4. Findings 60
4.1 Weld Testing 60
4.1.1 Tensile Testing 60
4.1.1.1 Equipment 60
4.1.1.2 Sample Preparation 62
4.1.1.3 Testing Results 64
4.1.2 Hardness Testing 68
4.1.2.1 Equipment 68
4.1.2.2 Sample Preparation 70
4.1.2.3 Testing Results 71
4.2 Visual 73
4.2.1 Surface finish 73
4.2.2 Macrostructure 74
4.2.3 Microstructure 75
5. Analysis 76

5.1 Practical Application 76
5.1.1 Components 76
5.1.2 Forces 77
5.1.3 TIG Weld Optimisation 77
5.1.4 Heat Affected Zone 80
5.1.5 FSW Optimisation 84
5.2 Costing 85
6. Conclusion 90
6.1 Discussion and Concluding Remarks 90
6.2 Project Success 92
6.3 Improvements 93
6.4 Recommendations 94
References 95
Bibliography 103
Appendices 104

List of Figures

Figure 1 - Antenna mounting frame 3
Figure 2 - Welded and machined safety brackets 3
Figure 3 - Unmanned target transport system 4
Figure 4 - GPS receiver bracket 4
Figure 5 - Welded steel framework 5
Figure 6 - Ventilation brackets and welded tread plate cladding 5
Figure 7 - Welded aluminium lifting bracket 6
Figure 8 - Manufactured 5 metre pontoon at Aberporth 6
Figure 9 - Aluminium weld failure 7
Figure 10 - Manual joining of aluminium section 8
Figure 11 - TIG welding area 9
Figure 12 - MIG/MAG welding area 9
Figure 13 - Welding Project Mind Map 12
Figure 14 - Project Plan Overview Panel 13
Figure 15 - Job Database 15
Figure 16 - FSW Process Steps (Grenzebach, 2020) 18
Figure 17 - FSW process and resulting structure (TWI, 2020b) 18
Figure 18 - Welding Process House of Quality (QDF Online, 2010) 32
Figure 19 - FSW Risk Assessment 35
Figure 20 - Stock material cutting 40
Figure 21 - Ajax semi-automatic milling machine 43
Figure 22 - Tool design (Padmanaban & Balasubramanian, 2009) 45
Figure 23 - Tool material interaction (TWI, 2020f) 45
Figure 24 - Tapered tool pin manufacture 46
Figure 25 - Parallel tool pin manufacture 47
Figure 26 - FSW Tool 47
Figure 27 - Fixture wireframe view 48
Figure 28 - Fixture fabrication 49
Figure 29 - Assembled fixture 50
Figure 30 - Initial FSW setup 53
Figure 31 - Tool shoulder deposit 53
Figure 32 - Shallow tool depth 54
Figure 33 - Deep tool depth 54
Figure 34 - Successful FSW 56
Figure 35 - FSW surface swarf 58
Figure 36 - Sample edge preparation 58
Figure 37 - Conventional weld setup 59
Figure 38 - Tool pin failure during plunge 59
Figure 39 - Zwick/Roell 200kN UTM 60
Figure 40 - TestXpert II interface display 61
Figure 41 - Instron plate wedge grips 61
Figure 42 - Tensile sample specification 62
Figure 43 - Tensile sample variation chart 62
Figure 44 - Weld specimen cutting 63
Figure 45 - Tensile sample machining 63
Figure 46 - Prepared tensile sample 63

Figure 47 - Loaded tensile sample 65
Figure 48 - Pulled sample UK 65
Figure 49 - Stress strain graph, all results 67
Figure 50 - Stress strain graph, focused comparison 67
Figure 51 - Vickers Hardness Testing Machine 68
Figure 52 - Indenter and calibration standard 69
Figure 53 - Vickers Calibration 69
Figure 54 - Arc welding hardness sample 70
Figure 55 - FSW hardness sample 70
Figure 56 - Quantifying indentations 72
Figure 57 - Vickers Hardness Results Graph 72
Figure 58 - Surface sample 5 73
Figure 59 - Surface sample 13 73
Figure 60 - FSW 5 macrostructure 74
Figure 61 - TIG macrostructure 74
Figure 62 - FSW Sample 5 HAZ TMAZ interface 75
Figure 63 - TIG Sample HAZ Weld interface 75
Figure 64 - Antenna support framework 76
Figure 65 - Isolated sub-assembly 76
Figure 66 - Current design stress analysis 78
Figure 67 - Isolated symmetry model 78
Figure 68 - TIG Topology 79
Figure 69 - Stress analysis including 20mm hole 79
Figure 70 - Tool shoulder force simulation 81
Figure 71 - Weld geometry 82
Figure 72 - FSW Topology 84
Figure 73 - Topology informed design stress analysis 84
Figure 74 - Plate nested view 85
Figure 75 - Optimised blank 85

List of Tables

Table 1 - SWOT Analysis (Wittwer, 2019) 23
Table 2- FMEA Form (Juran, 2018) 26
Table 3 - Requirement Traceability Matrix (Requirements.com, 2020) 28
Table 4 - Summary of Analyses 33
Table 5 - Al 6082 Composition 41
Table 6 - Al 6082 Mechanical Properties 41
Table 7 - Supplied Al 6082 Mechanical Properties 42
Table 8 - Al 6082 Physical Properties 42
Table 9 - Milling machine capability 43
Table 10 - FSW investigation parameters 44
Table 11 - Selected FSW tool style 45
Table 12 - FSW Trial Parameters 55
Table 13 - Conventional Welding Parameters 55
Table 14 - Tensile Test Results (3 d.p.) 64
Table 15 - Processing & welding cost comparison 89

List of Appendices

Appendix 1 - TIG FSW Time Comparison 104
Appendix 2 - Aluminium Datasheets 105
Appendix 3 - Aalco Order 107
Appendix 4 - FSW Tooling Drawing 108
Appendix 5 - FSW Fixture Drawing 109

Abbreviations

ABE - Aberporth Site Code

CAD - Computer Aided Design

CNC - Computer Numerical Control

DES - Design and Engineering Support

FAA - Federal Aviation Administration

FEA - Finite Element Analysis

FCAW - Flux Cored Arc Welding

FMEA - Failure Mode Effect Analysis

FoS - Factor of Safety

FSW - Friction Stir Welding

GMAW - Gas Metal Arc Welding

GTAW - Gas Tungsten Arc Welding

HAZ - Heat Affected Zone

HoQ - House of Quality

MAG - Metal Inert Gas

MIG - Metal Active Gas

MMA - Manual Metal Arc

MOD - Ministry of Defence

QFD - Quality Function Deployment

TIG - Tungsten Insert Gas

TMAZ - Thermomechanically Affected Zone

UTS - Ultimate Tensile Strength

1. Introduction

1.1 Project Introduction

Friction Stir Welding (FSW) is a solid state metal joining process that is utilised more and more for its cost saving benefits over conventional arc welding processes. This project will look at how the benefits of FSW can be attained by the QinetiQ Aberporth engineering facility. Research will be carried out to evaluate the facility's current operation and to identify areas where FSW can make a positive impact. Recent published work relating to the topic will be reviewed so that essential technical understanding is developed allowing informed project decision making. A research strategy will be developed alongside a project plan to ensure the work undertaken will deliver the desired engineering outcome. Welding processes will be compared by mechanical testing and the resulting data will be analysed. Based on the analysis, a solution will be developed that is advantageous to the company.

1.2 Company Background

QinetiQ is a global defence technology company based in the United Kingdom; the company formed in 2001 when the Ministry of Defence privatised the majority of the Defence Evaluation and Research Agency (DERA) programme. In 2003 the company signed a long term partnering agreement with the Ministry of Defence to supply testing and evaluation of defence systems. The company is listed in the FTSE 250 on the London Stock Exchange with a five yearly average share value of 280p.

The QinetiQ UK sites are predominately situated on MOD bases that are operated and maintained by the company. Globally, the company work with foreign military and technology customers with operations in Europe, North America, Australia and the Middle East. QinetiQ employs six thousand science, engineering and technology personnel worldwide.

MOD Aberporth is located on Wales' west coast and holds six and a half thousand square kilometres with an unlimited altitude of restricted airspace for testing and evaluation. The range offers a controlled environment for missile firing trials and a host of related operations. There are several departments on the site that provide support to numerous areas of the company.

Design and Production is the company's internal engineering solution department. The department operates collaboratively across the UK sites, utilising capabilities at various locations to achieve its goals. Aberporth Engineering provide Design and Production with mechanical manufacturing capability, which supports companywide operations and local engineering solutions through a tasking system. Structural fabrication capability is the principle asset at Aberporth Engineering, providing a range of ferrous and non-ferrous products to the company (QinetiQ, 2021a).

In 2016, newly appointed CEO Steve Wadey embarked the company on a strategic growth strategy in order to build the business and since then four years of consecutive growth have been observed. A pillar of the strategy is to grow the international revenue to 50% of the overall; since 2016 the international revenue has increased from 21% to 31%. The company accounts reflect the success of this strategy through raised order value and increased revenue; from £587.2m in FY2018 to £972.1m in FY2020 and £833.0m in FY2018 to £1,072.9m in FY2020 respectively (QinetiQ, 2020a).

On the 13th of January 2021, QinetiQ released the third quarter trading update which announced being on-track for a fifth consecutive year of growth; owing this success to the early steps that were taken to safeguard the company's revenue during the initial uncertainty of the COVID-19 pandemic (QinetiQ, 2021b).

1.3 Project Aim

The aim of this project is to assess the feasibility of utilising a FSW process for the purpose of increasing efficiencies in the joining of structural aluminium members. It is hypothesized that the replacement of conventional aluminium welding processes with newer technology will reduce the amount of resource required to prepare, carry out and inspect each weld. This project also aims on influencing the way in which the structural design process develops engineering solutions by considering the advantages and limitations of the process. It is intended that the findings of this project will provide the foundation knowledge required to create an enabling procedure for implementing FSW across the wider engineering capability. The long-term goal sees the benefits of FSW recognised by the company's engineering community and adoption of the process where those benefits can be secured.

1.4 Project Objectives

The project aim gives rise to the following objectives, they are to be viewed as instructions that will direct the project:

Objective 1: Review a range of published literature and any other credible information sources to establish how FSW may be applied in the Aberporth engineering facility.

Objective 2: Develop a FSW process to appropriate standards in order to establish optimum welding parameters.

Objective 3: Develop a sustainable method and justification for the application of FSW in the current setting.

Objective 4: Conclude the project and provide clear recommendations for the application of FSW.

1.5 Current Methods

1.5.1 Manufactured Products

Core design and manufacture tasks carried out at Aberporth Engineering include fabrication, welding, machining and turning of ferrous and non-ferrous components. For example: structural aluminium framework (Figure 1, Figure 3), part remanufacture (Figure 2), instrumentation bracketry (Figure 4), structural steel framework (Figure 5), ventilation bracketry (Figure 6), lifting equipment (Figure 7), target barge manufacture and maintenance (Figure 8).

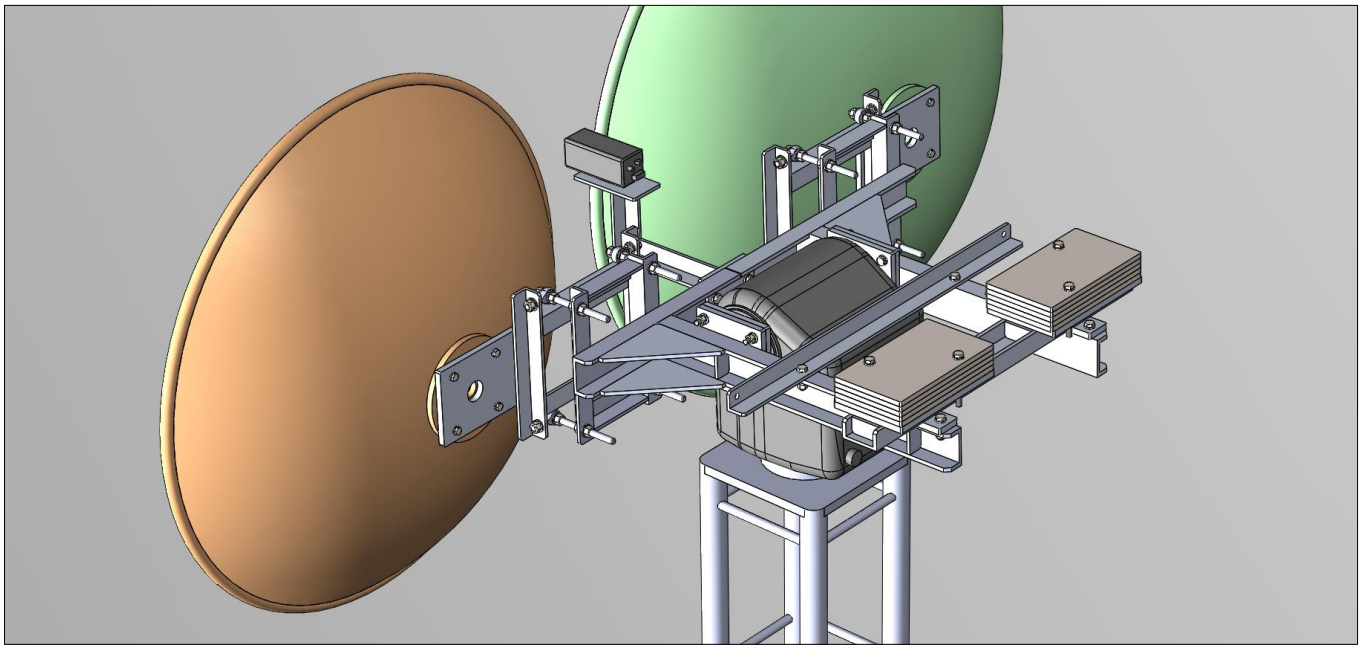

Figure 1 - Antenna mounting frame

Figure 2 - Welded and machined safety brackets

(Left, remanufactured aluminium parts. Right, die cast original part)

Figure 3 - Unmanned target transport system

(Various aluminium sections types, welded and bolted to form an assembly)

Figure 4 - GPS receiver bracket

Figure 5 - Welded steel framework

Figure 6 - Ventilation brackets and welded tread plate cladding

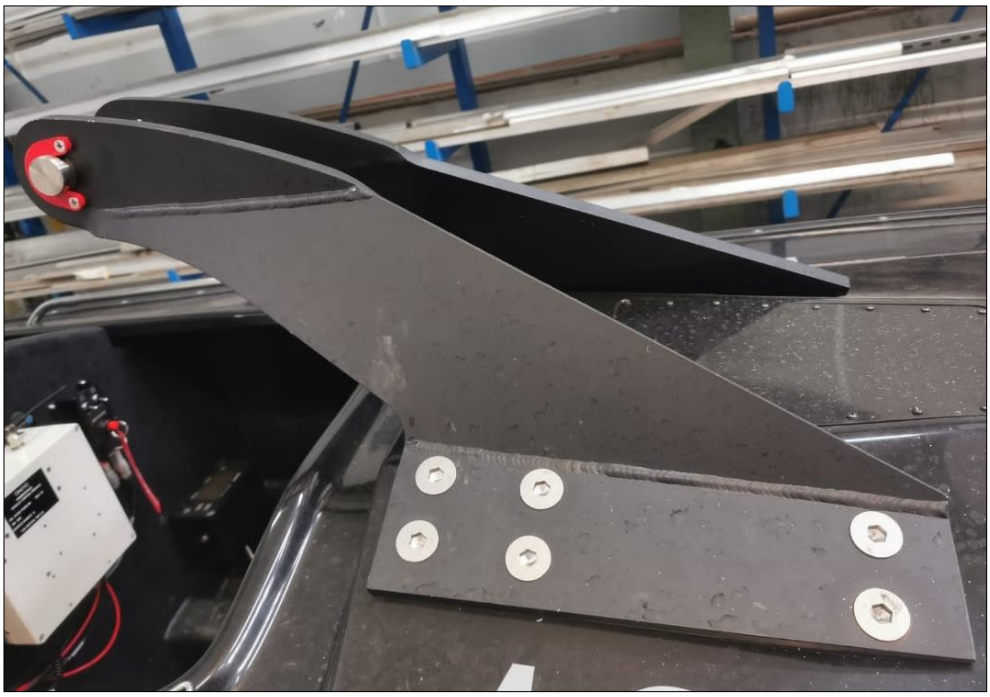

Figure 7 - Welded aluminium lifting bracket

Figure 8 - Manufactured 5 metre pontoon at Aberporth

1.5.2 Acknowledged Issues

With reference to the current manufacturing methods for aluminium structures and associated welding processes in particular; failures due to crack propagation are attributed to defects such as porosity, cold lapping, lack of fusion or undercut. The cause of these defects are often observed to be a result of poor welding technique due to the necessity to manually control several welding parameters simultaneously.

The failed aluminium weldment[1] shown in Figure 9 has been caused by a lack of fusion between the weld and the parent material, reviewing the procedure revealed the root cause to be insufficient weld zone temperature pre-welding. The major contributing factors are; preheating not being carried out and the use of heavy steel fixtures which rapidly conduct the arc heat away from the weld zone at a rate which initially exceeds the heat input, shown in Figure 10. Heavy fixtures are required to counter the effects of unequal stresses created within the weld zone which translate into member distortion (Jones, 2020).

Furthermore, weld profile consistency is acknowledged as an ongoing issue. This is observed in the lower weldment shown in Figure 7; the weld itself will have passed inspection. However, longer term failures such as fatigue cracks are often connected to inconsistent weld geometry.

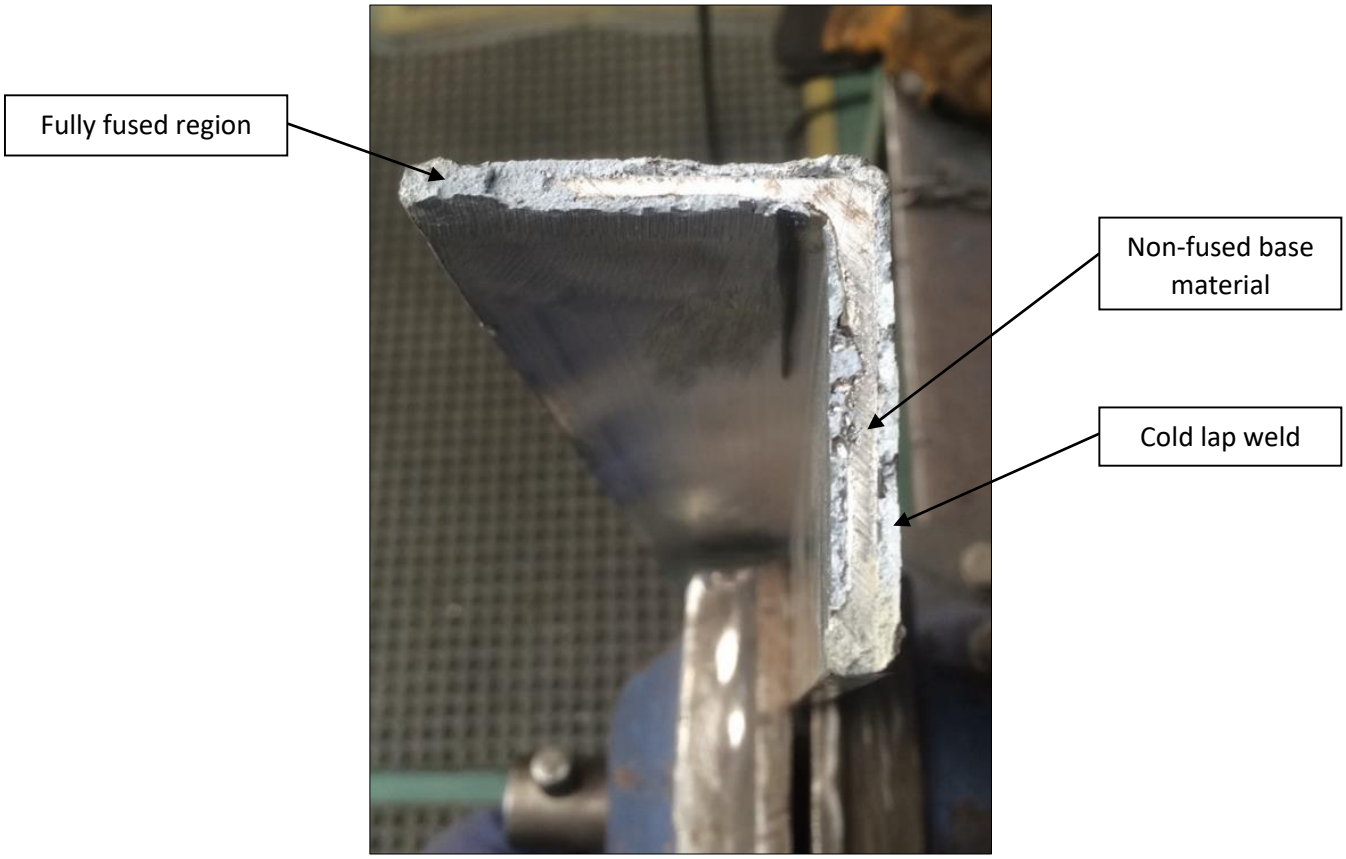

Figure 9 - Aluminium weld failure

[1] 2” x 2” equal angle aluminium section, 7/16” thickness. Structural frame member- in service failure.

Figure 10 - Heavy fixtures and manual joining

1.5.3 Current Welding Processes

The Aberporth engineering facility houses dedicated welding areas:

- TIG welding area with Lincoln Electric Precision TIG 375, Figure 11 (Lincoln Electric, 2021).
- MIG/MAG welding area with Murex TransMIG 350 and ESAB Aristo 450, Figure 12 (ESAB, 2021).

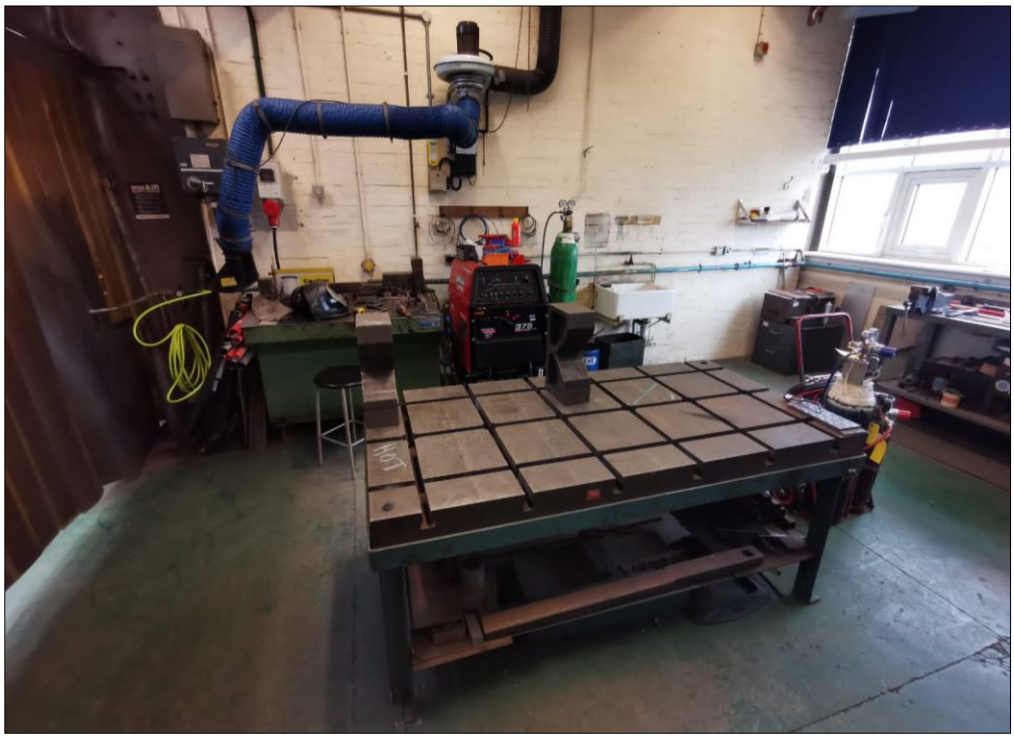

Figure 11 - TIG welding area

Figure 12 - MIG/MAG welding area

The arc welding processes outlined, utilise various shielding gasses to suit the requirement of the particular task. A combination of shielding gas and purging gas is used to control oxidisation (BOC, 2021).

QinetiQ use the BOC welding gas scheme, companywide:

- Argosheild Universal (86% Ar, 12% CO_2, 2% O_2) for carbon steels.
- Pureshield Argon (100% Ar) for aluminium.
- Stainshield Heavy (60% Ar, 38% He, 2% CO_2) for stainless steels.
- Nitrogen for purging hollow components.

The hazards presented by the generation of fumes and harmful ultra violet light through arc welding are suitably managed so that the level of risk to the operator is deemed acceptable (Zurich, 2021), (BINZEL, 2021), (3M, 2021)

QinetiQ Aberporth engineering utilise the following controls:

- Local exhaust ventilation units.
- Fixed and mobile fume extraction hoods.
- BINZEL on-torch fume extraction systems.
- 3M Speedglass Adflo air fed welding helmets.
- Welding curtains.
- Occupational health lung performance screenings.

1.6 Project Proposal

Undertaking this research project will present the opportunity for; cost saving, extending the engineering capacity, working innovatively and contributing towards current knowledge. The information obtained from reviewing current process and failures is fundamental in initial idea generation, shown in Figure 13.

1.6.1 Cost Saving and Capacity

The primary occupational rational for undertaking this project is to access the potential cost savings which are discussed in related published literature; factors such as, reduced welding preparation, reduced welding times and an almost complete reduction in consumables facilitate those savings. The secondary reason looks to utilise the new capability as an increase in welding capacity within the company fabrication workshops; by transferring a portion of the welding tasks to the FSW process from the currently fully utilised GMAW and GTAW processes, this will provide some much needed alleviation in those areas.

1.6.2 Innovation

QinetiQ promote a comprehensive innovation strategy that drive actions for continual improvement. Recently, an overhaul and standardisation of companywide CAD packages has resulted in enhanced collaborative design work. Locally, this has highlighted some areas for improvement when devising engineering solutions, such as carrying out structural optimisation. It is intended that this new way of working will be able to capture the specification requirement to enable the use of FSW, evolving with the incorporation of design optimisation. Being able to recognise where FSW can be applied and tailoring mechanical designs to suit will provide evidence towards working innovatively.

1.6.3 Research

It has been identified through the review of published literature that there is a lack of specific information regarding the use of FSW and the 6082 grade aluminium alloy currently used in the structures fabricated at the Aberporth facility. A supplementary reason for undertaking the project is to contribute towards the aforementioned body of information on welding, materials testing and results evaluation.

1.6.4 Idea Generation

A preliminary review of various welding processes has been carried out to in order to set a research target (TWI, 2020a) (BSI, 2020a). FSW is considered in further detail; on completion of the thought process, a route of practical testing, analysis of results and application is offered. Project idea generation through brainstorming is captured in a mind map diagram, shown in Figure 13 (Simple Mind, 2020).

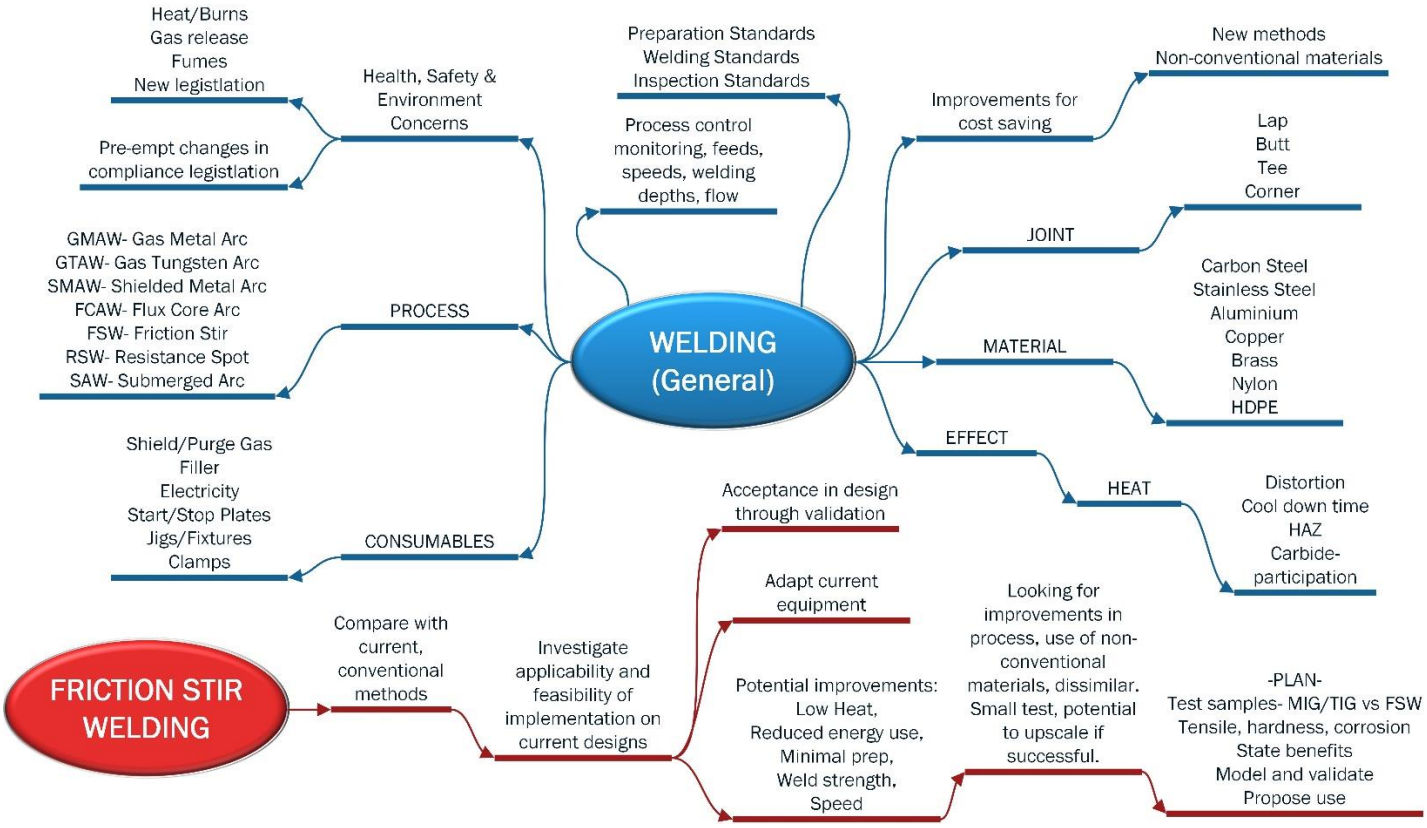

Figure 13 - Welding Project Mind Map

1.7 Project Planning

Microsoft Project has been used to manage the project and generate a Gantt chart and associated timeline of events (Landau, 2020). The project plan is a live document and an integral component for assurance purposes; key events such as, project supervisor meetings and workplace meetings have been recorded electronically in the project notes. The plan has been maintained to capture all project related activity and be presentable for audit at any time. There have been three project milestones in the plan:

- 27/07/2020 Aberporth Engineering approval to proceed with practical work.
- 18/11/2020 Completion of practical work; manufacture, FSW trials and material testing.
- 16/04/2021 Completion and submission of final report.

The project plan has been updated on a weekly basis and immediately after any meeting to capture all relevant details[2]. An overview of the entire project inclusive of summary tasks, milestones and key events is shown in Figure 14.

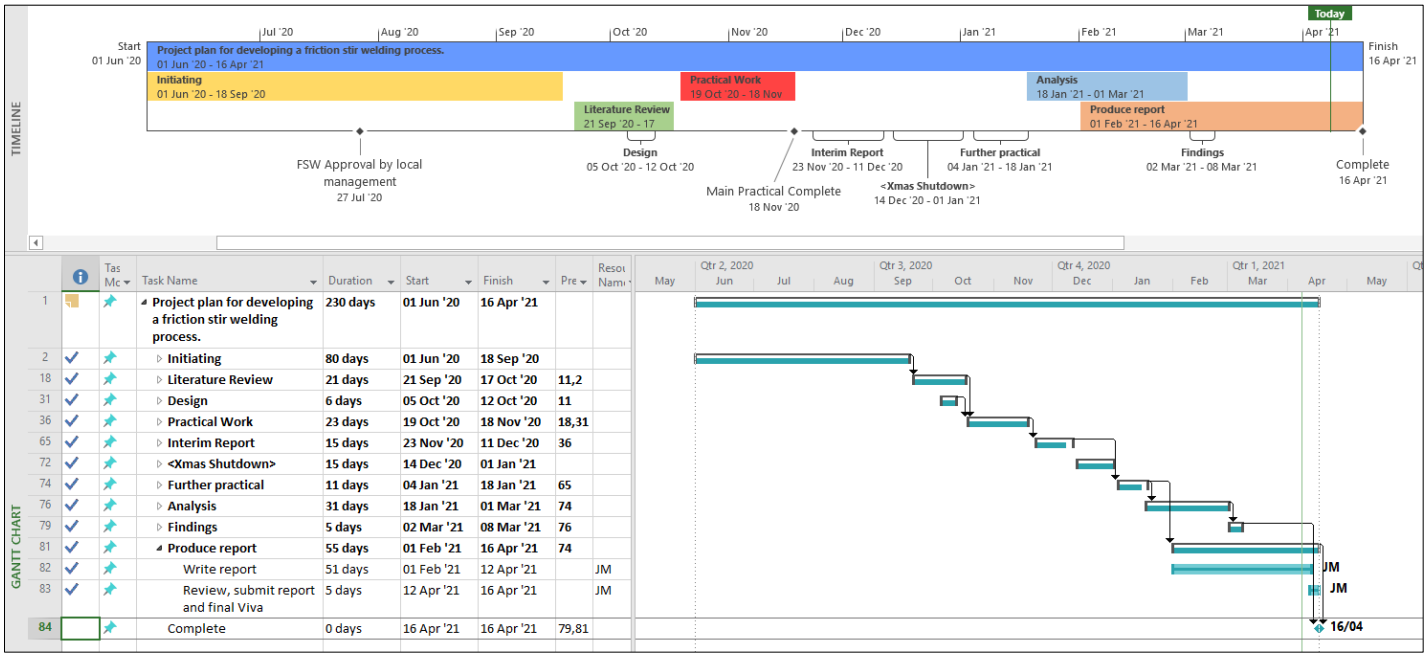

Figure 14 - Project Plan Overview Panel

[2] Final project plan update carried out week commencing 12/04/2021

1.8 Roles and Responsibilities

An engineering research project with several practical elements requires support form suitably skilled, academic and company personnel. Roles and responsibilities are detailed below; staff names are omitted in accordance with privacy policy.

- Role: Project manager and researcher, Jake Mowbray.
- Responsibility: Manage project timescale and cost, conduct research, present findings.

- Role: Engineering programme director, Andrew Thorn (UWTSD).
- Responsibility: Academic project supervisor.

- Role: Mechanical engineering team lead (QinetiQ).
- Responsibility: Company project supervisor.

- Role: Design engineer (QinetiQ).
- Responsibility: Technical drawing approver.
-
- Role: Welding engineer (QinetiQ).
- Responsibility: Welding process support.

- Role: Materials engineer (QinetiQ).
- Responsibility: Materials testing support.

- Role: Mechanical technician (QinetiQ).
- Responsibility: General production support.

- Role: Design and Production group lead (QinetiQ).
- Responsibility: Project approver, optimisation support.

- Role: Business administration officer (QinetiQ).
- Responsibility: Procurement processing.

- Role: Maintenance engineer (QinetiQ).
- Responsibility: Enabling of mechanical equipment.

- Role: Health and safety officer (QinetiQ).
- Responsibility: Risk assessment support.

- Role: Laboratory technician (Pembrokeshire College).
- Responsibility: Support with reagents for sample preparation.

1.9 Timescale and Budget

The project timescale has primarily been controlled by the academic requirements of the university; the company have not placed any additional time constraints on the project, details are shown in the project plan. The project budget is a commercially sensitive matter and is not available for discussion.

The company utilises an electronic database for tracking job activity, manpower and purchases, a capture of the job database is shown in Figure 15. The task has been assigned job number 2850: any design drawings or document titles associated with the project must use the title ABE-2850 followed by an individual identifier. The project number as seen on the database is linked to the working time recording system so that hours are booked directly to the project for accurate accounting.

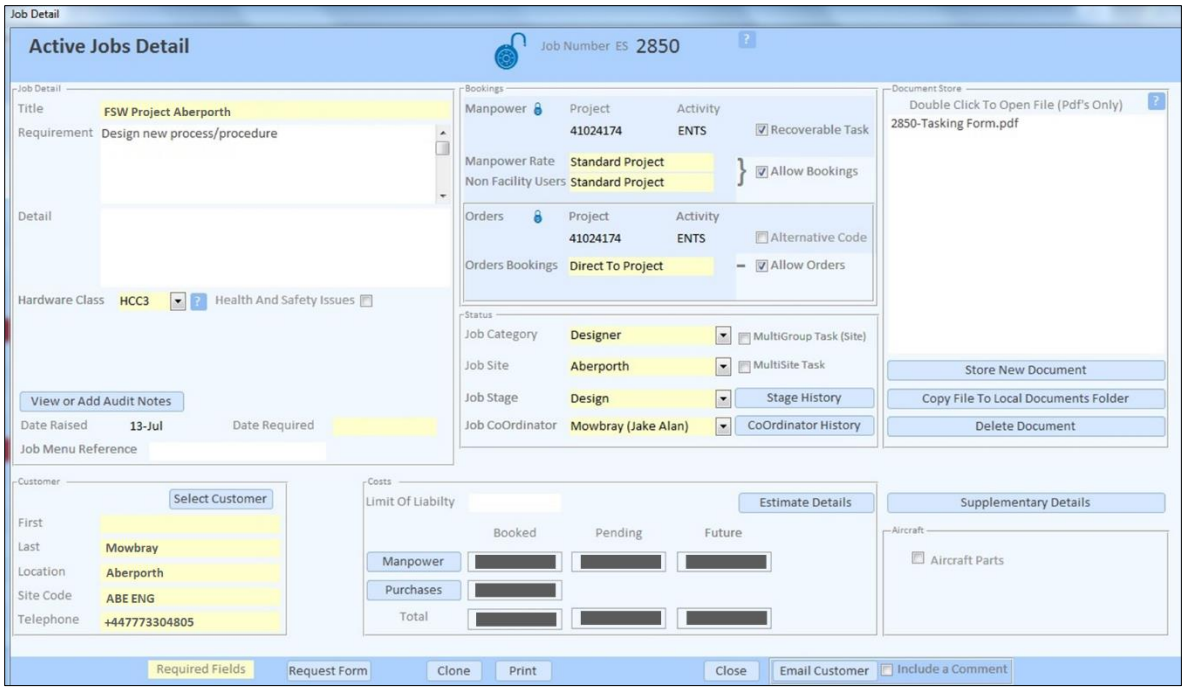

Figure 15 - Job Database

1.10 Root Cause Analysis

Techniques are employed in the workplace to analyse the root cause of particular issues and identify aspects of non-conformance (Vorley, 2008). The '5 Whys' technique is applied to the methodology employed by QinetiQ's design and production department for the fabrication and joining of aluminium structures. Casey (2009) explains the potential to expose the source of a problem due to the leverage provided by the technique when properly deployed.

Why are the current methods of fabrication highlighted for review?

There is no spare welding capacity available; in other words, the welding activities cause a bottleneck in the fabrication process.

Why is there no spare capacity?

The welding tasks are more time consuming than other activities in the fabrication process. GMAW and GTAW processes rely primarily on the physical labour element.

Why is a critical business function component being driven by such a physically demanding activity?

The process is the result of a longstanding, legacy methodology. Dedicated welding staff numbers have declined over the years[3], resulting in more demand being placed on less resource.

Why is legacy methodology being used to address current demand?

This method was suitable when correct staff levels were available; now, staff persist to meet unworkable production loads. Improvement options have not been explored.

Why have improvements not been investigated?

Mainly, due to the perception that substantial improvements to the process will involve unaffordable investment costs. Secondly, an attitude exists which resists the notion of changing the current ways of working for the better.

The technique is fundamental in exploring the depth of the problem; clearly, issues surrounding business restructure have imposed limitation. Whether those limitations are actual or perceived matters not, as the intended research plans to increase the welding capacity through utilisation of existing capability.

[3] Dedicated welding staff at MOD Aberporth engineering facility.
2020 - 7 staff , 2010 - 11 staff, 2000 - 20 staff (Jones, 2020).

2. Literature Review

The metal joining process of Friction Stir Welding (FSW) was developed by The Welding Institute[4], Cambridge in 1991 (TWI, 2020b); to whom, Wayne Thomas is credited as the principal inventor (Thomas, et al., 1997). As filed, the original patent describes the particulars of the process and tooling devised at The Welding Institute (Patent Office, 2020). Since the invention of this new technology, companies across the globe have taken full advantage of the concepts, further innovating and as a result delivering a new standard in the manufacture sector (Cambridge Network, 2017). 'FSW Patents - A Stirring Story' is an article published by TWI detailing this rapid take-up of FSW and the associated patent applications that have followed; companies which adopt the technology as an element of their production claim protection for their own particular process and tooling innovations (Smith & Lord, 2007). Boeing operate the second largest industrial application of FSW globally (TWI, 2020c); by way of example, they discuss how advancements in FSW parameters have been made in order to ascertain the material fatigue results required for approval from the FAA for the construction of aircraft components (Boeing, 2004).

TWI (2020e) describe FSW as: "a solid state joining process that uses frictional heat generated by a rotating tool to join materials". The heat generated initiates an area of plasticisation directly beneath the tool; in this area, the material softens and stirs around the tool (ESAB, 2020a). Grenzebach (2020) expand on the definition of solid state, or solid phase by explaining that a weld is produced below the base material melting temperature and is of a uniform arrangement. The welding process steps are shown in Figure 16; the rotating tool is plunged into the material until the tool shoulder makes contact with the top surface, the tool advances through the material creating a region of solid phase and finally the tool is retracted. The resultant material structure following the welding process is detailed in Figure 17; the area in which the material has undergone plastic stirring is labelled the thermomechanically affected zone, within this zone lies the weld nugget which has experienced major recrystallisation due to immediate exposure to the rotating tool pin. The diffusion of heat from the weld zone forms an area of grain growth and tempering labelled the heat affected zone; when the level of heating has no influence on the materials structure, a boundary is identifiable between the heat affected zone and the original material. The characterisation of process and resulting structure is well acknowledged in published literature (TWI, 2020b) (Hossein, et al., 2019) (Raj, et al., 2021).

[4] The Welding Institute- as displayed on the patent application at the time, the company is now officially TWI Ltd.

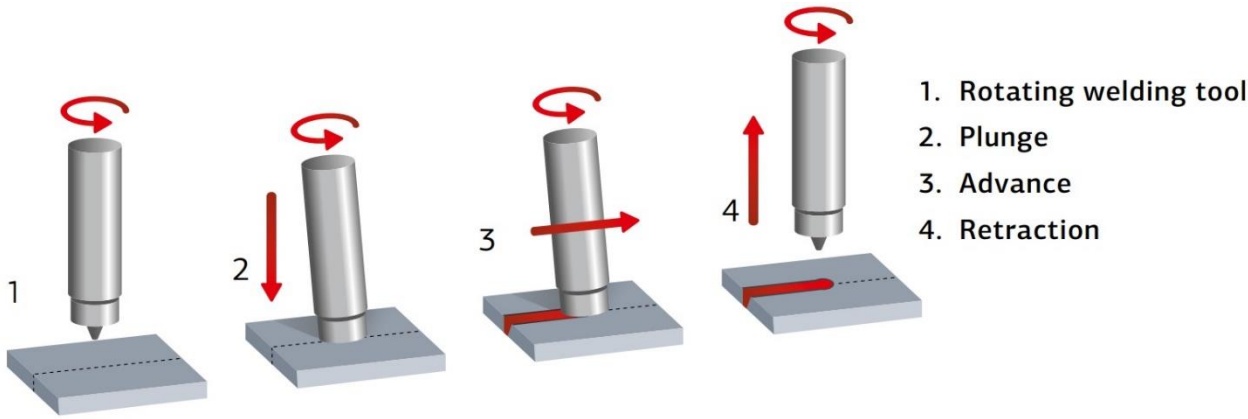

Figure 16 - FSW Process Steps (Grenzebach, 2020)

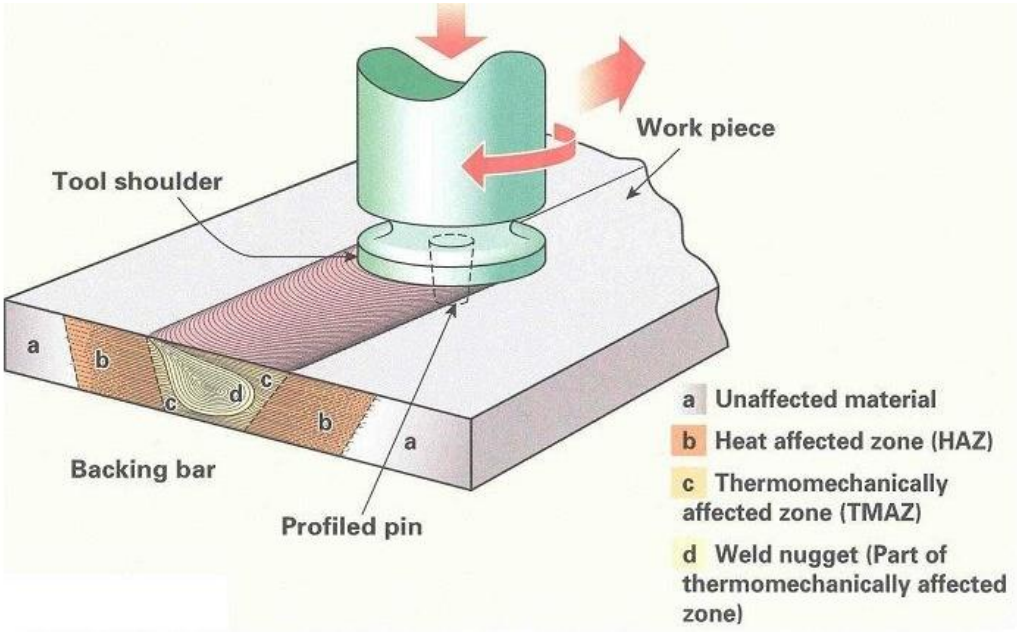

Figure 17 - FSW process and resulting structure (TWI, 2020b)

The primary industrial application for FSW is providing superior joints in aluminium alloy, the joining of dissimilar aluminium alloys or particularly difficult to weld aluminium alloys by conventional fusion processes (TWI, 2020b). Companies have been hugely successful in applying aluminium FSW in critical areas; a partnership between NASA and ESAB saw the construction of complex hydrogen fuel tanks on the world's largest FSW machine (ESAB, 2020b).

The widely accepted advantages of FSW over conventional welding methods are: low distortion due to relatively low heating, the potential for excellent mechanical properties, lower impact on health and safety, removal of fabrication consumables and the ability to weld in any position with minimal preparation (FPT, 2020). The European Union's FSW working group have categorised the advantages of FSW to which emphasis is placed on the positive environmental benefits such as, the absence of harmful welding fume emissions (Erasmus+, 2017). The European Commission have recognised the energy efficiencies and environmental

benefits of the technology; budgeting almost €950,000 through the Horizon 2020 innovation programme. In order to contribute towards lowering emissions, the Commission intend on assisting manufacturing sectors in the take up of FSW, aircraft frame manufacturing in particular. Funding the development of a universal FSW head with control autonomy for use on existing CNC milling machines is underway; the aim is to simplify the adoption of the new technology (CORDIS, 2019). Clean Sky Oasis (2020) appraise the project objectives for enabling innovation which can disrupt the manufacturing sector; as it may initiate a trend of embracing non-conventional methods for delivering higher quality, cleaner and more efficient manufacture. Recent studies have discussed how the airframe riveting process can realistically be replaced by FSW due to notably higher material testing values, alongside allowing manufacturer appreciation of increased efficiencies and reductions in carbon footprint (Clean Sky Oasis, 2020) (Humberto Mota de Siqueira, et al., 2016) (TWI, 2020d). QinetiQ state in their annual accounts the approach taken to address greenhouse gas emissions; the report highlights areas where energy efficiency improvements are being made and specific attention is drawn to the energy management plan which is in support of innovative, energy saving technologies (QinetiQ, 2020a).

TWI (2020e) restrict their definition of limitations and disadvantages of the FSW process to comparisons with conventional fusion processes: the formation of a tool exit hole upon retraction of the welding tool from the material, the requirement for significantly increased work piece restraints due to the forces applied and the control of gaps between components. Shah and Badheka (2019) delve further into process limitations; stating that no economical method has been found for the welding of steels. Eff (2012) discusses the requirement for costly tungsten based tooling when attempting to join steels, problematic wear and premature degradation are also implications. In essence, FSW is well suited to general solid phase aluminium joining and is useful in some very specific scenarios where hard metals are concerned, in this case the weld process travel distance becomes the main limitation due to the aforementioned tool degradation (Kennard, 2015).

Tool pin geometry is considered the most influential variable of the FSW process; Hattingh, et al. (2008) investigate how these factors ultimately effect tensile strength in 5083 aluminium alloy and conclude that a tapered tri-flute tool pin is optimal. Parallel pin, tapered pin, number of flutes, flute depth, flute angle, pin diameter and threads can be tailored to suit the intended application. It is clear that there is no definitive tool design for the FSW of aluminium; this is due to each individual research scenario being wholly different, and requiring varying parameters to develop a successful process. Banik, et al. (2020) investigate the effects of tool design on multiple material properties, to which they conclude the tapered threaded pin is superior in 6061 aluminium alloy. The control of heat flux in the tool is presented as a critical factor in maintaining appropriate levels of heat in the welding area; thermal studies are carried out to establish optimum styles, the triangular shaped pins are concluded to be most effective (Sandeepa Sarma, et al., 2020).

Aalco (2020) explain the beneficial properties of aluminium alloys for engineering applications; grade 6082 is defined as the highest strength for fabrication scenarios which validates the current manufacturing procedures. ESAB (2020a) contrast the equipment required for assuring repeatability within manufacturing; conventional CNC machines are capable of performing simple welds however, purpose built equipment becomes essential as material thickness and weld lengths are increased. Literature relating specifically to utilising conventional milling machines for the successful FSW of aluminium is available, to which it provides comprehensive detail of setup parameters (Banik, et al., 2020). Ramamoorthi, et al. (2020) discuss the findings of a broad investigation on the influence of axial force on 5086 and 6063 series aluminium alloy FSW butt joints. The work's own review of previous attempts has informed the selection of parameters and sensible variation range. A standard vertical milling machine was adapted for the investigation and tooling manufactured from high speed steel. The work also identifies the inevitability of requiring a robust, purpose made fixture for FSW, as it is observed that sample movement during welding has detrimental effects on the process. Al-Roubaiy, et al. (2019) investigate the metallurgical effects of varying welding parameters such as; traverse speeds, spindle rotation speeds, tool dwell time in the material and variations to tool pins and tool shoulder angles. The investigation also monitors and records the heat flux present in the samples to establish correlation with post-weld hardness and for the validation of a finite element model. The results propose that raising welding travel speeds so to not build heat in the material mitigates the softening effect initiated by the heating; optimum values for FSW exist dependant on the specific welding scenario. It is noted however, that heat values are also specific to this investigation due to the design of the fixture and environmental conditions. Madhusudan, et al. (2020) investigate the effects of altering process parameters with the added dynamic of dissimilar materials; 6061 and 7075 aluminium alloy grades; a dedicated FSW machine conducted the sample welding. It is established through comparison of results that a cylindrical tool pin geometry is superior to that of a tapered tool pin. The collected data is applied to a finite element model for validation in order to develop useful information such as, deflection and strain values. Reza-E-Rabby, et al. (2018) carry out an investigation which examines FSW of dovetail style joints between steel and aluminium; the use of an intricate, purpose made tool pin with tungsten carbide insert enables enhanced material mixing that is established through microscopy. As a continuation of the report, further work includes building a finite element model to predict mechanical performance in given schenarios (Reza-E-Rabby, et al., 2020).

It is evident that much contradicting information exists within published literature when exploring optimal welding traverse feed rates and tool rotation speeds. For example, research conclusions by Madhusudan, et al. (2020) and Al-Roubaiy, et al. (2019) state optimum welding parameters for similar material to be; 800rpm, 45mm/min and 450rpm and 116mm/min respectively. Whereas, Ramamoorthi, et al. (2020) and Balachandar, et al. (2020) promote typically higher values; 2000rpm, 60mm/min and 1400-1800rpm,

30mm/min respectively. Furthermore, Banik, et al. (2020) have achieved similar outcomes to that of the previous investigations at varying values; 1300rpm and 135mm/min, and 900rpm and 45mm/min. The discrepancies are likely the result of individual variations between processes; it is noted that published research on FSW is lacking standardisation, which in turn necessitates a critical need to conduct process specific preliminary trial and error to inaugurate quality.

The British Standards Institute has published a five-part document on FSW aluminium. BS EN ISO 25239:2020 provides specific instruction in the following areas: design of weld joints, welding operator qualifications, specification and qualification of welding procedures, quality and inspection requirements (BSI, 2020b). In order to deliver quality, a FSW process is required to comply with the specific instructions of this standard and of the applicable referenced standards. For example, BS EN ISO 25239-5:2020 Part 5: Quality and Inspection Requirements, states that tensile testing and the preparation of tensile test specimens shall be performed in accordance with ISO 4136:2012 and ISO 6892-1:2016.

The discussed investigations have produced and evaluated results by means of process observations and materials testing; at this stage, the huge variations between setups restricts comparability and it is realised that successful outcomes are often the result of specific process fine-tuning. However, it is clear that a range of parameters exist that produce sensible results on the discussed materials; the purpose of specific workplace investigations is to devise a procedure by which optimum results can be delivered within the confines of the existing capability.

3. Methodology

3.1 Reasoning

An informed approach must be taken when progressing with original research; steps are taken to ensure that research is well managed, resources are used effectively and efficiently and safety is paramount (McCombes, 2019). The information presented in the previous sections will be used to create a project strategy.

3.2 Project Strategy

Applying strategy is done through step by step thinking and articulating how objectives are going to be achieved (Morris, 2004). SWOT Analysis, Failure Mode Effect Analysis, Requirement Traceability and House of Quality are applied methodically in order to expand the project objectives into perceptible meaning.

3.2.1 SWOT Analysis

Business and company projects require a clear strategy to enable growth and success. The SWOT analysis is a tested method for analysing relevant strengths, weaknesses, opportunities and threats (MindTools, 2020). The SWOT analysis presented in Table 1 considers internal company and department strengths and weaknesses, followed by the potential external opportunities, and the threats presented by external influence.

It is proposed that the discussed opportunities are both direct and in-direct advantages of the successful implementation of FSW; the scale of these opportunities will match the scale of utilisation and implementation of the process by the company. For example, the value of energy consumption reduction will solely depend on the volume of traditional work that can realistically be replaced by new technology. The identified strengths are of appropriate standing to enable the further reaching opportunities; the experience needed to achieve certain goals already exists within the company. Some of the identified weaknesses can be worked on to reduce their overall impact; applying rigorous project planning and issuing timely project updates to the relevant personnel is vital. The external threats are mainly out of direct control, although controls can be put in place to prepare. The adoption of lean working is beneficial when contingency planning, as this reduces overall project impact on day to day operations. In order to establish appropriate controls for the more relevant project threats, the failure mode effect analysis technique is applied.

Table 1 - SWOT Analysis (Wittwer, 2019).

S	INTERNAL **STRENGTHS**
1	QinetiQ is a world leader in the development of technology.
2	The company operates a robust design and production department across several countries.
3	Welding, fabrication and inspection are all key areas of the design and production department.
4	Resource and support available to support projects from within the department and externally.
5	Good retention of both technical knowledge and practical engineering experience within the department.
6	Annual budget allocated for research into innovative ideas.
7	High demand for weld and fabrication tasks.

W	INTERNAL **WEAKNESSSES**
1	Ineffective funding investment leading to reduced resources for successful projects.
2	Slow project pace due to cumbrous management and internal procedures.
3	Gradual decline in engineering capability and capacity leading to outsourcing.
4	High demand results in reduced time available for improvement projects.
5	Periods of insurmountable work demand due to poor scheduling, results in other high priority tasks being placed on hold.
6	Varying interpretations of health and safety by individuals, results in inadequate work methods and misguided decision making in general.
7	Poor communication internally and externally.

O	EXTERNAL **OPPORTUNITIES**
1	Increased efficiencies in energy and resources from using new welding technology.
2	Process has not yet been utilised by the company.
3	Growth in capability, enabling work of higher technical demand and tolerance.
4	Contribute towards working innovatively for external stakeholders.
5	Secure funding for project expansion.
6	Comply with recent amendments made to welding fume regulations.
7	Develop procedure and contribute to ongoing topic research.

T	EXTERNAL **THREATS**
1	Change in customer requirement.
2	Change in company direction or pursued markets resulting in a move away from traditional production.
3	Amendments to health and safety legislation specific to the project, placing legitimate obstructions that require spending to overcome.
4	External companies providing higher cost competitiveness results in outsourcing.
5	Significant developments in 3D metal weld printer technology resulting in market disruption which makes the traditional obsolete.
6	Limitations or additional tariffs on materials used by the process which drive up cost.
7	Work restrictions due to COVID-19 or other external factors.

3.2.2 Failure Mode Effect Analysis

In order to appreciate risks associated with the project, the FMEA technique is applied to the key project steps as defined by the project plan with a consideration for the areas of concern raised by the SWOT analysis, the information is documented and shown in Table 2. In engineering, FMEA is used to identify potential failures in a product or process; this is followed by a quantitative assessment of the inherent risks for the purpose of highlighting vulnerability (Reliability Engineering Resource Website, 2020).

The FMEA identifies the following as being the highest risk to the project:

- Welding preparation not carried out or carried out incorrectly; either by, the use of incorrectly specified material or, material supply delays caused by poor planning.

A risk value of 288 is allocated: which is 88% higher on average when compared to all other risk values. The reason for the risk value being high is due to difficult detectability if incorrectly specified material has been used: the presence of this factor causes the risk to be multiplied significantly.

To reduce the risk of incorrectly specified material, a resource and scheduling manager has supplied guidance on the correct method of company procurement and acceptance. Additionally, reducing the risk as far as reasonably practicable within the capability of the department entails:

- Placing a just in time order so not to store material unnecessarily.
- Upon delivery, review supplied certificate of conformity and store documentation electronically.
- Log the material and quantity on the DES tooling and traceability database and assign to the FSW development task.
- Log communication notes on the system which inform staff that correct use of material is critical.

With the preventative actions in place, an amended risk value of 126 is allocated: now being 60% higher on average when compared to all other revaluated risk values, taking into account the remedial actions this is a positive change in reduction of risk to the project.

The following actions as identified by the FMEA have been incorporated into the project plan, forming a practical method of quality improvement.

- Keep track of relevant research sources in a separate project document.
- Review welding preparation requirements.
- Ensure welding parameters are well established before commencement of trials.
- Ensure conformity and establish traceability as defined previously.
- Revisit the available literature, review for process similarities in order to identify ideal methods.

- Make internal departments aware of the project and secure any advice: design office team, forensic materials team, stress analysis team.
- Monitor the COVID-19 situation, discuss contingency with engineering manager.

Donato (2020) explains that during product development, 70-80% of the overall costs are locked-in during the design stage. The concept is valid, as it is recognised that once plans are set into motion, material is ordered, hours are booked; it becomes impossible to make a project U-turn as the majority of the costs have been allocated, here lies the critical importance of error free planning.

Table 2- FMEA Form (Juran, 2018)

Process or Product Name:	FSW Project
Process Owner:	Engineering

Failure Mode Effect Analysis Form

Prepared by:	Jake Mowbray	Page: 1 of 1	
FMEA Date (Orig):	Sep-20	Rev. -	

Key Process Step or Input	Potential Failure Mode	Potential Failure Effects	SEV	Potential Causes	OCC	Current Controls	DET	RPN	Actions Recommended	Resp.	Actions Taken	SEV	OCC	DET	RPN
What is the Process Step or Input?	In what ways can the Process Step or Input fail?	What is the impact on the Key Output Variables once it fails (customer or internal requirements)?	How **Severe** is the effect to the customer? (10 high, 1 low)	What causes the Key Input to go wrong?	How **often** does cause or FM **occur**? (10 high, 1 low)	What are the existing **controls** and procedures that prevent either the Cause or the Failure Mode?	How well can you **detect** the Cause or the Failure Mode? (1 obvious, 10 undetactable)	Value Pre-Action	What are the actions for reducing the occurrence of the cause, or improving detection?	Who is Responsible for the recommended action?	Note the actions taken. Include dates of completion.	Re-evaluated Severity (10 high, 1 low)	Re-evaluated Occurrence (10 high, 1 low)	Re-evaluated Detectability (1 obvious, 10 undetactable)	Value Post-Action
Project Research	Failure possible if limits are placed on the research.	Development of useful data is not achieved. Project answers the wrong questions.	9	Sufficient research to direct the project is unavailable due to access restrictions or being withdrawn from published view.	6	Backup copies of informative welding articles, journals and digital textbooks are stored were possible.	4	216	Log of information sources.	J Mowbray	Ongoing	9	5	3	135
Practical Prep	Preparation not being carried out or only partially carried out.	Project information produced is not to the required standard.	8	Insufficient timescales, poor planning, poor comprehension of required project steps.	7	Project planning tool.	2	112	Review requirements, ensure adequate prep.	J Mowbray	To be reviewed weekly.	8	5	1	40
"	Critical welding aspects not planned and fully developed (parameters, jigs).	Unexpected welding results and unreliable data.	8	Insufficient timescales, poor planning, insufficient/incorrect research.	7	Project planning tool. Literature review.	3	168	Allocate additional time to develop jigs and establish parameters.	J Mowbray & Engineering Manager	Throughout prep phase.	8	6	2	96
"	Material prep not carried out or carried out incorrectly.	Welding outputs become unusable for analysis.	9	Material supply delays, poor planning, incorrect material specification.	8	Company resource and scheduling tool.	4	288	Document intended material specification for use.	J Mowbray & Internal Project Support Manager	Prior to placing material order.	9	7	2	126
Practical Welding	Reasonable welding results not achieved (Parameters).	No data attained for further analysis	7	Lack of experience, information, knowledge and guidance. Incorrect parameters.	6	Literature review.	2	84	Further review of similar projects to better establish potential parameters.	J Mowbray	Prior to initiating trials.	7	6	1	42
"	Tooling failure or excessive wear.	Data sets become non-comparable due to change in size of welded area.	8	Incorrect tooling material, incorrect geometry, overloaded.	6	Literature review, trial and error considered.	2	96	In depth research and design. Accurate machining of tooling. Reduce reliance on trial and error.	J Mowbray	Prior to initiating trials.	8	6	1	48
"	Reasonable welding results not achieved (Factors such as work piece movement).	No data attained for further analysis.	9	Lack of experience, information, knowledge and guidance. Insufficient work holding.	6	Literature review, CAD analysis.	2	108	Document verification of CAD analysis.	J Mowbray & Design Office Staff	Planning phase.	9	5	1	45
Data analysis	Data not yielding intended results.	Development of solution not possible due to poor data.	8	Poor data gathering techniques, incorrect data.	7	Equipment calibration.	3	168	Seek internal expert advice on materials.	J Mowbray & Forensic Material Team	Prior to testing.	8	6	1	48
Finite element analysis modelling	Unable to validate model with data.	Developed solution is not representative.	8	Data wrong or model designed incorrectly.	8	Literature review.	3	192	Establish software capabilities (non-linear analysis).	J Mowbray & Stress Analysis Team	Prior to analysis.	8	8	2	128
Entire Project	Inability to continue. Critical tasks not carried out. (Coronavirus).	Research becomes limited, No practical, No data for analysis.	10	Unexpected spread of pandemic, negative affects on capability (people and access to equipment).	10	Monitoring situation.	1	100	Pre-emptive measures- accelerate areas of project.	J Mowbray & Engineering Manager	Immediately.	10	8	1	80

3.2.3 Requirement Traceability Matrix

Requirement traceability refers to the management tool which identifies, presents and compares project or process requirement information. IIBA (2009) explain how business needs are tied to an actual project requirement, and requirements are then tied to project deliverables. Weigers (2003) defines the process as being able to trace business needs forward to requirements, so that it is possible to identify the affected requirement if the business needs change. It is also possible to trace those requirements forward to create well informed product or process features. It is worth noting that both tracing techniques may be reversed to assess the requirements origin and the reason why particular features were created.

Discussions were held between the Design and Production, fabrication group lead, the Aberporth fabrication team lead, fabrication engineers and several members of the regional mechanical design office in order to establish the business needs, or 'demanded quality' of a prospective welding process (Thurlow, et al., 2020). The current approved aluminium welding processes operated by the department where identified as GTAW and GMAW; GTAW being the predominantly utilised process due to its versatility. The following requirements would need to be considered in assessment for implementing a FSW process:

- High weld strength
- Highly versatile process (multiple use)
- Deployable process
- Non-problematic quality inspection
- Good aesthetic appearance
- Good customer impact
- Provides value for money
- Safety enabler
- Joint longevity

The identified business needs of welded joints are placed into the traceability matrix alongside the welding processes, shown in Table 3. An in depth evaluation is carried out so that each process can be informatively ranked for conformance against each requirement. The output ratings shown for each process is the combination of overall ranking values for each business need. FSW is shown to be exceptional in meeting all business needs bar; versatility and cost, for reasons explained in the matrix. To expand on the cost element; the matter is much down to interpretation. The process may seem costly to a user with low utilisation of the process, yet good value for money to a user seeking to expand welding capacity through existing capability. In either case, if a substantial CNC or semi-automatic milling machine is part of the current capability, only a small investment will be required to expand the welding capacity. By contrast, this investment will be a fraction of the cost of replacement GMAW or GTAW welding plant.

Table 3 - Requirement Traceability Matrix (Requirements.com, 2020)

Requirement Traceability Matrix						
Requirements (Demanded Quality)	**Process characteristic traceability to requirements and observed feasibility rating**					
	Gas Metal Arc Weld		***Gas Tungsten Arc Weld***		***Friction Stir Weld***	
1. High weld strength	Metal inert gas welding process of aluminium alloy plate and structural extrusions requires a complete cover joint- 100% of the joint is welded. High weld strength is difficult to achieve in aluminium due to a lack of adequate fusion from incomplete removal of the passive oxide layer. Cold lapping also contributes, caused by insufficient critical heating at the site of the arc; input weld heat dissipation at the arc occurs at a higher rate than of the heat input (Miller, 2020a).	1	Tungsten inert gas welding process of aluminium alloy provides a higher weld strength than that of the MIG welding process. By contrast, 50% joint cover would provide equivalent strength. The heat input of the dedicated arc is far superior, thus enabling complete fusion. The process is susceptible and sensitive to surface contaminants as they can have a detrimental effect on weld strength; chemical cleaning is essential to obtain satisfactory welds in critical positions (Lincoln, 2020).	2	Friction stir welding has the potential for superior weld strength given the correct parameters. A joint of comparable strength to the base material is attainable due to the reduction in structure softening experienced by arc processes. Enabling higher strength joints expands the opportunities for optimisation of the area immediately surrounding the weld (Threadgill, et al., 2009).	3
2. Highly versatile process (multiple use)	MIG process can be well applied in 1G and 2G positions. Shielding gas and parameters can be adjusted generally. Specialised modifications to standard MIG welding equipment required for use on aluminium (Miller, 2020b).	2	TIG process can be well applied in all positions, 1G to 6G. Shielding gas and parameters can be finely adjusted. Applied to pipe and plate material of all sizes when adequate preparation is carried out (Miller, 2020b).	3	FSW process is configured for a particular joint geometry and material thickness; significant time is required to establish the parameters. The weld is carried out on a purpose built FSW machine that is considered fixed (TWI, 2020b).	1
3. Deployable process	Aluminium MIG process has been deployed across some company production facilities through the procurement of welding plant.	1	Aluminium TIG process has been deployed across most company production facilities through the procurement of welding plant. Process is preferred when compared to MIG due to high versatility for complex positions.	2	Research suggests that the FSW process is easily replicable, thus deployable. Deployment across company sites can be enabled through the utilisation of existing capability (TWI, 2020e).	3

4. Non-problematic quality inspection	Aluminium MIG weld inspection requires a combination of techniques due to many possible defects. Dye penetrant and developer must be used to identify cold lapping or surface propagated cracks from weld shrinkage. Ultra sound methods are used to detect internal porosity, contamination and cracking; a variety of probes are required in order to accommodate the different weld profiles and positions. Radiography is rarely required as the process is rarely employed for critical joints (Pascoal, et al., 2018).	1	The requirements of aluminium TIG welding inspection are broadly similar to that of the MIG process, however due to the increase in localised heat input, cold lapping is not considered a common defect. Radiographic and ultrasonic methods are used to quantify internal weld defects (Prashanth, et al., 2019).	2	FSW is a simple process in principle with no external contours; the weld is made within the confines of the original material geometry. Inspection through phased array ultra sound methods will reveal defects when calibrated against non-welded sections of material (Olympus, 2020). Surface roughness evaluation is applied with easy to the flat weld surface (Bhushan & Sharma, 2020).	3
5. Good aesthetic appearance	MIG process provided poor appearance; soft, non-rigid filler wire leads to arc wonder which in turn causes inconsistent contours on the surface of the weld bead. Staining, burning, soot and spatter are all common issues (Mercan, et al., 2020).	1	TIG process is often specified for its ability to deliver clean weld joint that require no further finishing techniques. Several controllable parameters alongside user experience allow high quality weld appearance (Miller, 2020c)	2	FSW holds the potential to deliver near perfect surface finish in terms of contour consistency and flatness. The process is free from spatter deposits, burning and burning (Shah & Bradheka, 2019).	3
6. Good customer impact	- Well established process for an economical, fast joint in thin materials. Ideal where 100% weld integrity is not critical.	1	- Well established, reliable process on most thicknesses and positions. - High strength. - Providing parameters are correct, the weld can form an aesthetic product characteristic.	2	- High strength. - Innovative technology. - The recent published research is relatable and ongoing. - Lower cost. - Improved environmental impact due to removal of fumes, consumables and secondary techniques for preparation.	3
7. Provides value for money	Current process. Equal amount of time required to carry out welding, carry out welding preparation and carry out post weld cleaning of weld and work piece.	2	Current process. Equal amount of time required to carry out welding, and welding preparation. Comparison observation carried out, Appendix 1.	3	Actual welding time and setting out time are the same as MIG and TIG processes, significant reductions in preparation time due to the removal of need to form plate edges. Specific fixture investment required.	1

8. Safety enabler	Significant controls are required to deal with harmful welding fume produced by the aluminium MIG process; high burn rates produce soot and smoke. The high level of ultra violet light generated, reacts with air to produce ozone (HSE, 1993).	1	The TIG process produces circa 10 times less fume from burning but does produce significantly higher levels of ozone, particularly when working with aluminium silicone alloys (HSE, 1993).	2	By contrast, the FSW process is cleaner in terms of operator safety due to the lack of high temperature welding and generation of harmful fumes. The significant operator risks are mechanical entrapment from automated moving parts. High weld reliability contributes towards safety enablement through reduced in-service failures (ClassNK, 2010).	3
9. Joint longevity	Aluminium MIG welds are highly susceptible to failure through cracking due to stress concentrations caused by partial weld to substrate fusion. Additional weld reinforcement, and large weld caps are often specified in order to extend service life (Costa, et al., 2014).	1	The increased heat input of the TIG welding process results in weld tempering; during the process, some ductility and toughness is restored allowing the material and weld to withstand applied stresses (Haryadi, et al., 2018).	2	Increased weld joint fatigue strengths are attainable with the application of suitable parameters. By nature of the process, the original joint is completely reformed so that no sudden changes in geometry exist that give rise to damaging stress concentrations. Severe material restructure during welding is known to give rise to intergranular and pitting corrosion (Threadgill, et al., 2009).	3
Output Rating	Process for application in non-critical scenarios.	11	Well established, versatile and reliable process.	20	Potentially viable process with many advantages.	23

3.2.4 House of Quality

To identify and understand the relationships which exist between specific process requirements; the application of QFD is beneficial (Hessing, 2013). As explained by Jahan, et al. (2016), the House of Quality is a fundamental step in combining definite customer objectives alongside subjective process output requirement which are yet to be fully defined. The House of Quality technique shown in Figure 18 illustrates the correlation between the 'demanded quality' requirements of a company welding process and the 'design quality' welding process components, with the view of highlighting valuable areas for improvement. The 'demanded quality', or business needs for conducting in-house welding processes were identified and ranked by importance; as discussed previously, welding process factors and ideal production targets were set via discussion with key members of the company engineering community (Thurlow, et al., 2020).

The result of relationship correlation analysis identifies the production target 'reduction of energy consumption' as highest importance; highlighted yellow in Figure 18. This outcome stands to reason when considering that 'provides value for money' is the most important business demand. The HoQ roof section clarifies the relationships; whether positive or negative, between welding process components. Reiterating the point of reducing energy consumption; strong positive correlation exists between the process steps which focus on consumables, equipment, training and overall operational cost. The need to reduce costly process input through alternative technology provides the basis for moving towards lean working practices. Pombal, et al. (2019) implement lean methodologies in a manufacturing environment by rationalising workshop consumables; the results present significant time saving. This strengthens the notion of reducing or indeed eliminating process steps made redundant by newer technology.

The competitive analysis section compares the adaptability of each welding process to the 'demanded quality' requirements: GTAW, GMAW, FSW and alternative methods, chemical adhesive[5] specifically. The results diagram provides clear differentiation between particular aspects of the requirement. On the whole, FSW holds the greatest potential for meeting those requirements; the only significant downside being the lack of process versatility. Note, the potential of FSW proving value for money is significant as the individual points are scored relatively.

Fulfilling the requirements of 'demanded quality' so far as reasonably practicable gives justification for identifying those requirements in the first place (ASQ, 2019). Analysing the potential and limitations of FSW in this manner ensures that focus is maintained about reducing process costs throughout development. It is realised that the overall process cost is not reliant on energy consumption alone, but several additional factors.

[5] QinetiQ Aberporth staff are experienced in the production of specialist composite panels through application of 2-part epoxy adhesive (Araldite 2015-1); scoring is instructed with that experience in mind (Phillips, 2020).

Title: *House of Quality Aluminium Welding Process*
Author: *J Mowbray*
Date: *26/10/2020*
Notes: *The tool is used to assess: strength of correlation between quality characteristics - relationships between quality characteristics and demanded quality - welding process characteristic comparison.*

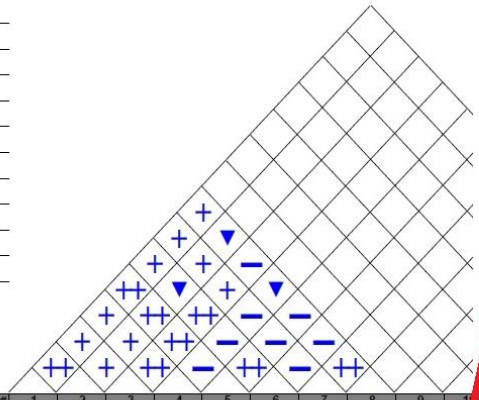

Legend		
⊙	Strong Relationship	9
O	Moderate Relationship	3
▲	Weak Relationship	1
++	Strong Positive Correlation	
+	Positive Correlation	
−	Negative Correlation	
▼	Strong Negative Correlation	
▼	Objective Is To Minimize	
▲	Objective Is To Maximize	
X	Objective Is To Hit Target	

Row #	Max Relationship Value in Row	Relative Weight	Weight / Importance	Demanded Quality (a.k.a. "Customer Requirements" or "Whats") \ Design/Quality Characteristics (a.k.a. "Functional Requirements" or "Hows")	1 Weld Preparation Requirements (Time and Consumables)	2 Post Weld Cleaning Requirments (Time and Consumables)	3 Ease of Weld Process Use	4 Process Training/ Competency Requirments	5 Process Operation Cost	6 Process Tooling / Equipment Durability	7 Weld Area Resistance to Failure	8 Mechanical Strength / Factor of Safety	9	10	Competitive Analysis (0=Worst, 5=Best): 1. Gas Metal Arc Weld	2. Tungsten Gas Arc Weld	3. Friction Stir Weld	4. Alternative Joining (Chemical Bonds)		
				Direction of Improvement: Minimize (▼), Maximize (▲), or Target (x)	▼	▼	▲	▼	▼	▲	▲	▲								
1	9	15.6	7.0	High Weld Strength	⊙	▲	O	▲	⊙		⊙	⊙			3	4	5	2		
2	9	6.7	3.0	Highly Versatile process (multiple use)	O	O	⊙	⊙	▲	O					3	4	2	5		
3	9	8.9	4.0	Deployable Process (replicable on other sites)	▲	▲	⊙	⊙	⊙	⊙					4	4	5	5		
4	9	13.3	6.0	Non-problematic Quality Inspection	▲	O		⊙			O	▲			3	4	4	0		
5	9	4.4	2.0	Good Aesthetic Appearance	▲	⊙		⊙							2	5	5	1		
6	9	2.2	1.0	Good Customer Impact			▲		⊙		O				4	4	4	2		
7	9	20.0	9.0	Provides Value for Money	⊙	⊙		O	⊙	⊙					2	2	3	1		
8	9	17.8	8.0	Safety Enabler				▲			⊙	O			2	4	5	2		
9	9	11.1	5.0	Joint Longevity							O	⊙			3	4	5	2		
10																				
				Target or Limit Value	Weld material as supplied.	Reduce mechanical cleaning.	Simple process with predefined parameters.	Competent / experienced process operator	Reduce energy consumption.	No tooling failures.	No deformation or mechanical damage by intended use.	Improve strength where possible.								
				Difficulty (0=Easy to Accomplish, 10=Extremely Difficult)	10	7	7	7	10	9	8	7								
				Max Relationship Value in Column	9	9	9	9	9	9	9	9								
				Weight / Importance	366.7	304.4	188.9	393.3	426.7	280.0	380.0	306.7								
				Relative Weight	13.9	11.5	7.1	14.9	16.1	10.6	14.4	11.6								

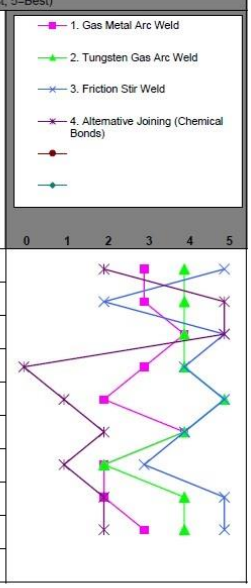

Signifies cut line to save space

Powered by QFD Online (http://www.QFDOnline.com)

Figure 18 - Welding Process House of Quality (QDF Online, 2010)

3.2.5 Summary of Analyses

Knowledge of the welding processes, specific to their use within QinetiQ has been developed alongside an appreciation for organisational factors relevant to the project through the application of relevant analyses. The major benefits and concerns identified by these analyses are summarised in Table 4.

Table 4 - Summary of Analyses

Analysis Method	Major Benefits	Concerns
SWOT Analysis	Opportunity to exploit the advantages of new technology. Publicise the first time use of FSW within the company.	Project placed on hold due to lack of funding or resource.
FMEA	Project issues identified. Ensuring success through remedial action for the right issues, at the right time.	Potential impact of uncontrolled external factors.
Traceability Matrix	Higher value to the customer by being honest about what is possible. Ability to understand the impact of changing customer demands.	Limits on project adaptability; redundant solutions as a result of radical change in requirement.
House of Quality	FSW justified through competitiveness. Reduced energy consumption. Improved mechanical outputs.	Shift in process competitiveness as a result of further technological developments.

3.3 Project Enablement

Several preparatory aspects are delivered in line with the project plan in order to facilitate the practical FSW trials in a safe and reliable manner.

3.3.1 Safety

In line with company policy for developing a safe working environment for carrying out any task, it is critical to identify and control hazards, review operator competency and report any issues through the appropriate channels.

3.3.1.1 Risk Assessment

A risk assessment was carried out in order to identify likely hazards encountered when operating a FSW process. The hazard likelihood and severity are considered and controls are placed upon the process in order to reduce the risks as far as reasonably practicable (HSE, 2020). The details are recorded on the company risk assessment template, shown in Figure 19.

3.3.1.2 Competency

All staff involved in the project are deemed competent; a review of the QinetiQ competency framework tool ensures that individuals possess all the relevant skills, knowledge, currency and experience to ensure safety. For example, individuals responsible for appropriately identifying hazards and assessing risk are to ensure IOSH safety training is complete.

3.3.1.3 Reporting

As discussed in the risk assessment, any unexpected events are to be reported though the company incident reporting tool located on the QinetiQ intranet, in addition to direct management reporting in case of the need for immediate action. Unexpected events are defined as, but not limited to: near miss, dangerous occurrence, physical harm, damage to equipment or property and loss of containment.

As a direct result of a robust safe system of work being put in place; no dangerous occurrences were encountered.

QINETIQ	**Risk Assessment - Friction Stir Welding Project**	SAF/ABE/QQ/3.0 12/10/2020 Page 1 of 5

Activity/Process/Facility Description:

Use of AJAX heavy milling machine for Friction Stir Welding at Aberporth Engineering in Bldg 100.

Summary:

- Highly stressed material and tool components.
- Automated machine movements.
- Equipment cleaning.
- Control & safe disposal of waste.

Assessment Team: *(Print Names)*	*Jake Mowbray / Mechanical team lead / Safety officer*
Initial Assessment Date:	12/10/2020
Identification No:	ABE/ENG/011
Lead Risk Assessor: *(Print and sign)*	Jake Mowbray
Manager Responsible: **(Print and sign)**	Mechanical team lead
Review Dates:	12/10/2021

Likelihood of Event	C	Cr	Se	M	N
F	VH	VH	H	M	L
P	VH	VH	H	M	L
O	H	H	M	L	T
R	M	M	L	T	T
I	L	L	T	T	T

Severity		Likelihood	
C	**Catastrophic** (Multiple fatalities and/or 3rd party fatality or severe widespread environmental damage)	F	**Frequent** (Not surprised, will occur several times)
Cr	**Critical** (Single fatality and/or multiple severe injuries and/or 3rd party severe injuries, occupational illness or environmental impact)	P	**Probable** (Occurs repeatedly/an incident to be expected)
Se	**Serious** (Single severe injury or occupational illness and/or multiple minor injuries or minor occupational illness and/or 3rd party minor injuries)	O	**Occasional** (Infrequent, but could occur sometime)
M	**Minor** (Minor injury/short term absence and/or 3rd party trivial injury)	R	**Remote** (Unlikely though conceivable)
N	**Negligible** (Trivial injury (First aid only)/ environmental damage to plants)	I	**Improbable** (Could happen but probably never will)

Risk Rating

Very High - Work shall not proceed or facility shall not be used

High - Reduce risk through additional controls. Permit to Work may be required in addition to Safe Method of Work; competency levels appropriate and documented

Medium - Reduce risk through additional controls if practicable, if not, add to the Safe Method of Work the levels of competency should be appropriate

Low - This work which may be of a routine nature will require a Safe Method of Work

Trivial - Additional controls required only if the benefits justify the effort

Comments:

Regular health surveillance is carried out on all engineering staff, this includes a routine medical surveillance on lung capacity checks, skin, hearing etc.

All ENG PPE stock items have been assessed and are suitable for the task required. See PPE1 for further details.

PPE/RPE is to be stored correctly in designated storage areas. Pre-user checks must be carried out on PPE prior to use to check suitability and for any damage.

Figure 19 - FSW Risk Assessment

QINETIQ	Risk Assessment - Friction Stir Welding Project	SAF/ABE/QQ/3.0 12/10/2020 Page 2 of 5

No.	Hazards	Who might be harmed and how	Likelihood	Severity	Risk Rating	Specify existing control measures and where relevant, any additional control measures required for the works to proceed:	Likelihood	Severity	Risk Rating
1	***EXPOSURE TO HAZARDOUS SUBSTANCES:-*** *Exposure to welding fume, heated materials, toxic & irritant chemicals when carrying out maintenance or adjusting the process.*	**Who -** Equipment user/operator secondary staff working in the vicinity. **How-** Inhalation, causing respiratory disorders or long term occupational illness. Skin irritation. Burns.	P	Se	H	• Only trained or competent staff are allowed to use the equipment. • All substances used are COSHH assessed (COSHH No. 02, ABE/ENG/COSHH-11). • Guarding in place during normal operation. • User to wear PPE:- Eye protection, hand protection (Annex A) • Occupational Health checks carried out on maintenance/operators. • Washing facilities & skin barrier cream to be used. • Good housekeeping & personal hygiene to be followed – Clean equipment after use & wash hands after task.	R	M	T
2	***MECHANICAL*** *Specific to any manual work on the equipment, i.e.- tool change.*	**Who** - Equipment user/operator, other workshop staff, other people or staff in the vicinity. **How** – Physical injury during work activities.	O	Se	M	• All appropriate PPE & RPE to be worn. • All staff appropriately trained. • Equipment isolation. • Weekly equipment permit (ensuring fit for use).	R	Se	L

Framework Document Owner: Health and Safety

QINETIQ	Risk Assessment - Friction Stir Welding Project	SAF/ABE/QQ/3.0 12/10/2020 Page 3 of 5

3	***MANUAL HANDLING*** *Loading welding fixture or setting material.*	**Who -**Equipment user/operator, other workshop staff, other people or staff in the vicinity. **How –**Muscular-skeletal injury, strains.	O	Se	M	• Staff are trained in the correct Manual Handling techniques. • Assistance must be sought when lifting heavy items/equipment. • If item is too heavy or awkward mechanical lifting devices are available e.g. Gantry, trolleys etc. • Staff to restrict movement/twisting during lifting operations. • Appropriate designated equipment to be used for lifting. • Items (equipment or worked items) must be secure/stable before work commences. • All lifting equipment to be fully certified and in test. • The following Risk And Manual Handling assessments apply:- ○ Risk Assessment No. ABE/ENG/011 – General Manual Handling.	R	Se	L
4	***PERSONNEL IN THE VICINITY OF MOVING EQUIPMENT*** *(Milling machine automated table)*	**Who** - Equipment user/operator & indirect personnel **How** – Physical injury, Injury through contact with moving equipment etc.	P	Cr	HV	• Keep designated walkways clear-ensure clear access/egress routes are maintained with good housekeeping at all times. • Interlocking guards fitted. • Emergency stops accessible at all times.	R	Se	T
5	***NOISE***	**Who -** Equipment user/operator, other workshop staff, other people or staff in the vicinity. **How –** Hearing damage, causing long term occupational illness/disability.	O	Se	M	• Only essential staff directly involved in the task should be in the work area, – works areas should have restricted access. • Appropriate PPE to be worn (Annex A) • Constant electronic noise monitoring.	R	Se	L

Framework Document Owner: Health and Safety

QINETIQ	Risk Assessment - Friction Stir Welding Project	SAF/ABE/QQ/3.0 12/10/2020 Page 4 of 5

6	***FAULTY EQUIPMENT – MECHANICAL/ELECTRICAL FAULTS***	**Who -** Equipment user/operator **How** – Physical injury, electric shock,	O	Se	M	• Equipment is electrically tested every two years under the fixed appliance testing maintenance programme. • All manual and automated systems are inspected and maintained (mechanical & electrical) to manufacturers recommendations. • Damaged or faulty equipment is to be reported to management and removed from service. • Management will undertake random inspection of equipment to ensure compliance.	R	Se	L
7	***UNSAFE ACTS & OMISSIONS*** ***LACK OF COMPETENCY***	**Who -** Equipment user/operator, other workshop staff, other people or staff in the vicinity. **How –** Serious injury through unauthorised use/miss use of machinery/equipment.	P	Se	H	• Only trained and competent personnel are allowed to operate, program and maintain equipment. • All equipment must only be used within its operational parameters with reference to the equipment capacity/capability (i.e. Ensuring there is no overloading of machine feed rates).	R	Se	L
8	***LONE WORKING*** Person working alone.	**Who** - End user (employee) **How** – Inability to raise alarm/request assistance through injury or illness, unable to hear Fire Alarm - due to noise and protective clothing. Collapsing or fainting whilst working alone.	P	Se	H	• Only competent person is allowed to carry out tasks relevant to lone working (online training module). • If working alone- ensure there is personnel in the design office who is aware of the nature of task. • Timescales for the task are discussed and a plan for a periodic time check (e.g. 15 mins) is agreed. • If alarm is raised the delegated observer is to ensure the lone worker is made aware of the alarm & escorted out to the Fire Muster Point.	O	M	L
9	***Human Factors***	**Who -** Equipment user/operator. **How -** Several ways.	P	Se	H	• All staff to have current 'Human Factors' training. • All unexpected events to be recorded on the intranet incident reporting system.			

Framework Document Owner: Health and Safety

QINETIQ	Risk Assessment - Friction Stir Welding Project	SAF/ABE/QQ/3.0 12/10/2020 Page 5 of 5

Annex A - Supporting Documentation:

Risk Assessments

ABE/ENG/011-General Manual Handling activities carried out in the ABE Workshops.

ENG COSHH Assessment No.011 (ABE-STS-COSHH-02

Work Instructions

SAF-STS-ABE-WI- Use of Welding Plant.

SAF-STS-ABE-WI- Use of Milling Machines

SAF-STS-ABE-WI- Secondary Processes.

Supporting Information.

HSE Guidance

HSG129 - Health and safety in engineering workshops. (HSE Publication).

Hand Protection

- Rigger Gloves, handling etc. - EN383

Disposable Gloves solvent resistant

- PPE to Conform to EN374/EN388, i.e. " Ansell Disposable Nitrile Gloves"

Qualifications/Competencies.

Before undertaking any welding, machining, setting out or equipment maintenance all staff are to be,-***either*** sufficiently competent to use the equipment safely, being fully aware of the hazards involved in the process ***or*** supervised by a fully competent person.

All staff must have completed specific training and completed annual mandatory online training.

All staff are to be competent in general manual handling activities.

Qualifications/Competencies are recorded on the Engineering Design Office Qualifications/Competencies database.

PPE requirements. – *Please refer to ENG PPE1 assessment for further details of products (limitations, maintenance frequency, deficiencies etc.)* ***All of the following PPE must be worn when entering the welding area for maintenance etc.***

Eye Protection (Goggles & Spectacles).

- Safety goggles, face visor, safety spectacles - BSEN 166 – F

Ear Protection - See PPE1 for further information on ear protection levels.

- Emetic noise breaker BS 5108 (Can be used in conjunction with ear protectors)
- Foam Caps EN352:1993 Pt. 2
- Ear defenders EN352:1993 Pt. 1

Disposable Coveralls

- Flame Resistant Overalls EN ISO 11612: 2008 (A1 B1 C1)
- PPE to Conform to CE Cat 3, i.e. 'Kimberly Clark KleenGuard A40'

Foot Protection

- Safety Boots / Rigger Boots - EN 20345:2004

Framework Document Owner: Health and Safety

3.3.2 Material Composition

Aluminium alloy grade 6082 T6 is the material used in this research. It is a medium strength alloy with excellent corrosion resistance, lending itself well to the structural applications mentioned in the project proposal. The grade in particular, is the strongest in terms of tensile strength for the entire 6000 series; the temper is established through solution heat treatment and artificial aging. The T6 temper state in particular contributes well to allowing good machinability; short, clean chip removal is observed and a smooth, reflective finish may be obtained with correct tooling and parameters. It is recognised by the manufacturer that the material has good weldability through all processes; it is also accepted that the strength in the weld region is lowered due to the effects of heat input. The material is a wrought product and supplied as such in an extruded form (Aalco, 2019).

The extrusion form used in this research is, as supplied flat bar stock:

2” (50.8mm) width, ¼” (6.35mm) thickness and 0.87kg/m mass, 5 metre lengths [6]

Supply details are available on the material order form dated 20/10/2020, shown in Appendix 1. Further details are available in the stockist catalogue (Aalco, 2017, p. 7).

Figure 20 - Stock material cutting

[6] The vast majority of general aluminium stock is supplied in imperial sizes.

The material composition data for 6082 alloy is shown in Table 5; referenced from the manufacturer datasheet and confirmed by the current British Standard, BS EN 573-3:2009 (Aalco, 2019) (BSI, 2019a). Several alloying elements are present in 6082, each imparting characteristics on the overall condition. Silicon (Si) improves fluidity which is especially useful when arc welding and when the material is being deformed in FSW. Magnesium (Mg) is added to increase material strength; the presence of Silicon and Magnesium together produce the compound Magnesium-Silicide (Mg_2Si), which enables excellent heat treatability. The addition of Copper (Cu), Manganese (Mn), Iron (Fe) and Zinc (Zn) mainly increase the overall strength through solid solution hardening and by allowing precipitation hardening. The presence of Chromium (Cr) controls grain size when the material is heated and Titanium (Ti) facilitates grain refinement, adding stability to the material (AlcoTech, 2015).

Table 5 - Al 6082 Composition

Si	*Fe*	*Cu*	*Mn*	*Mg*	*Cr*	*Zn*	*Ti*	*Others*	*Al*
0,7-1,3	0,50	0,10	0,40-1,0	0,6-1,2	0,25	0,20	0,10	0,15 total 0.10 each	Remainder

The mechanical properties data for 6082 alloy is shown in Table 6; referenced from the manufacturer datasheet and confirmed by the current British Standard, BS EN 485-2:2016+A1:2018 (Aalco, 2019) (BSI, 2016). The reliability of results sits firmly upon the consistency of the supplied material's initial condition; samples of the supplied lengths were evaluated to assure conformity with one another, and with the specification. No significant deviation between the samples was observed; the evaluated values are shown in Table 7. The method of evaluation will be discussed further in the report. The supplied material is noted to be stronger in terms of both proof stress and tensile strength than the specification, which explains the lower hardness and higher ductility. The deviation in values is not detrimental; as what is supplied, is what is used during manufacture. This may be in indication of the supplier erring on the side of caution so not to supply a harder material than expected; leading to sudden brittle failure, as oppose to, manageable deformation.

Table 6 - Al 6082 Mechanical Properties

Mechanical Property	*Specified Value*
Proof Stress	255 MPa
Tensile Strength	300 MPa
Elongation in 50mm	9 %
Brinell Hardness	91 HB

Table 7 - Supplied Al 6082 Mechanical Properties

Mechanical Property	*Measured Value*
Proof Stress	297.7 MPa
Tensile Strength	320.9 MPa
Yield Strength	295 MPa
Elongation in 50mm	13.2 %
Brinell Hardness	90 HB

The physical properties data for 6082 alloy is shown in Table 8; referenced from the manufacturer datasheet (Aalco, 2019).

Table 8 - Al 6082 Physical Properties

Physical Property	*Value*
Density	2.70 g/cm³
Melting Point	555 °C
Thermal Expansion	24 x10^{-6} /K
Modulus of Elasticity	70 GPa
Thermal Conductivity	180 W/m.K
Electrical Resistivity	0.038 x10-6 Ω .m

3.3.3 Equipment

The FSW process was facilitated through adaptation of the Ajax AJUM350 semi-automatic milling machine which is located in the engineering department machine shop, shown in Figure 21; machine specifications are available from the UK stockists (Ajax Machine Tools International Ltd, 2021). Workshop equipment utilisation data shows less than 5% demand being placed on the machine during the period 01/10/2019 to 01/10/2020; based on the number of job task specification forms that specify machine use (QinetiQ, 2020b). Available spindle speeds and feed rates are shown in Table 9.

Figure 21 - Ajax semi-automatic milling machine

Table 9 - Milling machine capability

Spindle Speed rpm (C axis)	*Feed rate mm/min (X,Y,Z)*
Variable Range Spindle Limits, 28 to 1400	Variable Ranges X & Y Limits, 12 to 800 Z Limits, 1 to 240

3.3.4 Welding Parameters

The adaptation of milling machines for FSW is discussed in previously noted literature (Reza-E-Rabby, et al., 2018) (Kennard, 2015) (Threadgill, et al., 2009) (Mandal, et al., 2008); based on the available information, documented failures and successes, the parameters shown in Table 10 are selected for this investigation. It is recognised that the range of parameters selected hold the best likelihood of delivering a successful outcome, based upon the current welding setup. Poor weld and surface quality are attributed to lower values; as increased failure rates are attributed to higher values.

Table 10 - FSW investigation parameters

Spindle Speed rpm (C axis)	Feed rate mm/min (X axis)	Plunge rate mm/min (Z axis)
450	54	2
560	86	2.5
710	116	3
900	149	3.5

3.3.5 FSW Tooling

3.3.5.1 Design

Tool geometry optimisation is where the majority of FSW development lies; when implementing a new welding process or new specification it is necessary to trial various configurations in order to attain the best result (TWI, 2020f). The most well recognised configurations are shown in Figure 22; exact tool dimension will depend on the individual welding specification. The method in which the tool design interacts with the metal is illustrated in Figure 23; the material's specific characteristics dictate the amount of stirring required to enable successful joining, often established through welding trials.

The tool pin geometries used in this investigation are shown in Table 11; the purpose for selecting an initial range of geometries is to establish what is workable and what provides the best results. High Carbon bright steel to BS1407, or tool steel as it is alternatively known, is the specified material when developing a new FSW tool. Durability is observed when tool steel is employed; the work hardening effect of plunging into a high stress environment is continually offset by the equal softening effects of tempering due to the frictional heat generated (TWI, 2020f) (BSI, 1970). High precision, cylindrically ground stock tool steel of 1" diameter has been used to produce the tooling; the diameter is suited to the largest tool holding collet on the Ajax milling machine. The full tool drawing is shown in Appendix 4.

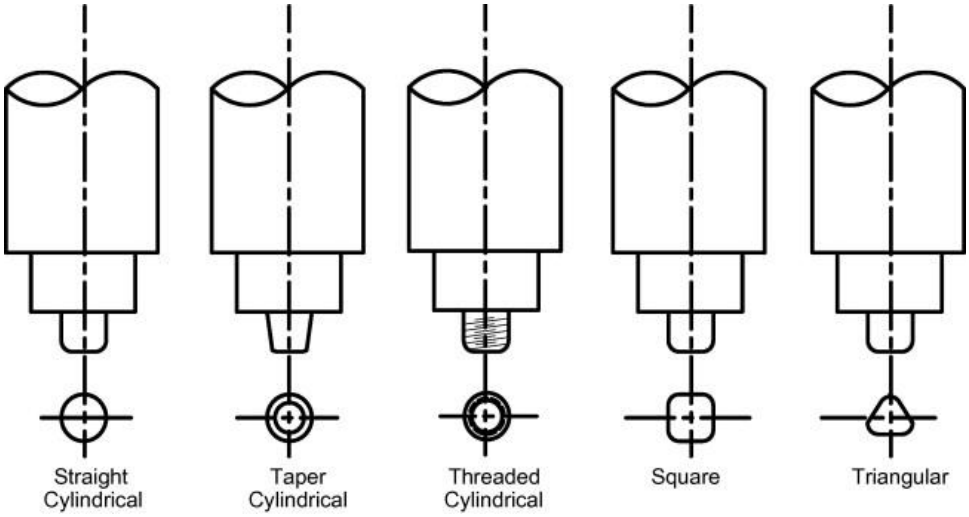

Figure 22 - Tool design (Padmanaban & Balasubramanian, 2009)

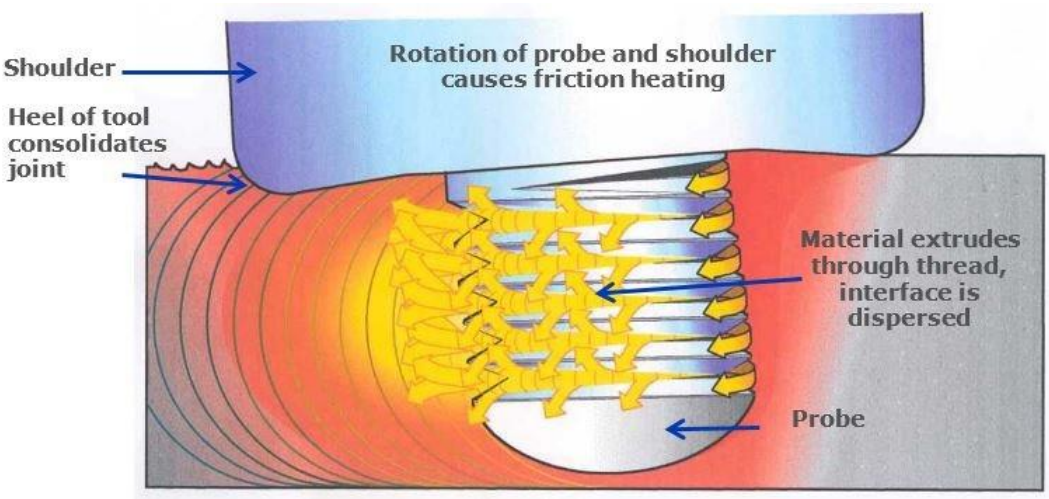

Figure 23 - Tool material interaction (TWI, 2020f)

Table 11 - Selected FSW tool style

Tool number	Tool Shape	Tool size
1	Threaded cylindrical	M6, 5mm length
2	Straight cylindrical	Ø6mm, 5mm length
3	Straight cylindrical	Ø6mm, 5.9mm length
4	Taper cylindrical	Ø3mm to Ø6mm, 5.9mm length

3.3.5.2 Manufacture

The designed FSW tooling was manufactured on a Hardinge Super-Precision lathe with an indexable tungsten carbide cutting tool for a fine surface finish, shown in Figure 24 is the tapered tool pin with 20mm diameter shoulder. The stock bar was cut to 150mm lengths and machined to the specification provided by the technical drawing. Notice the bright surface finish on the internal corner features; this is clearly illustrated in the parallel pin design, shown in Figure 25. A highly smooth radius feature is included at the zone of sudden change in geometry to reduce the stress concentrations which initiate the propagation of cracks, leading to material failure (Rawson & Tupper, 2001). For material utilisation and convenience in general, both ends on the bar were machined to the tool pin geometry, shown in Figure 26.

Figure 24 - Tapered tool pin manufacture

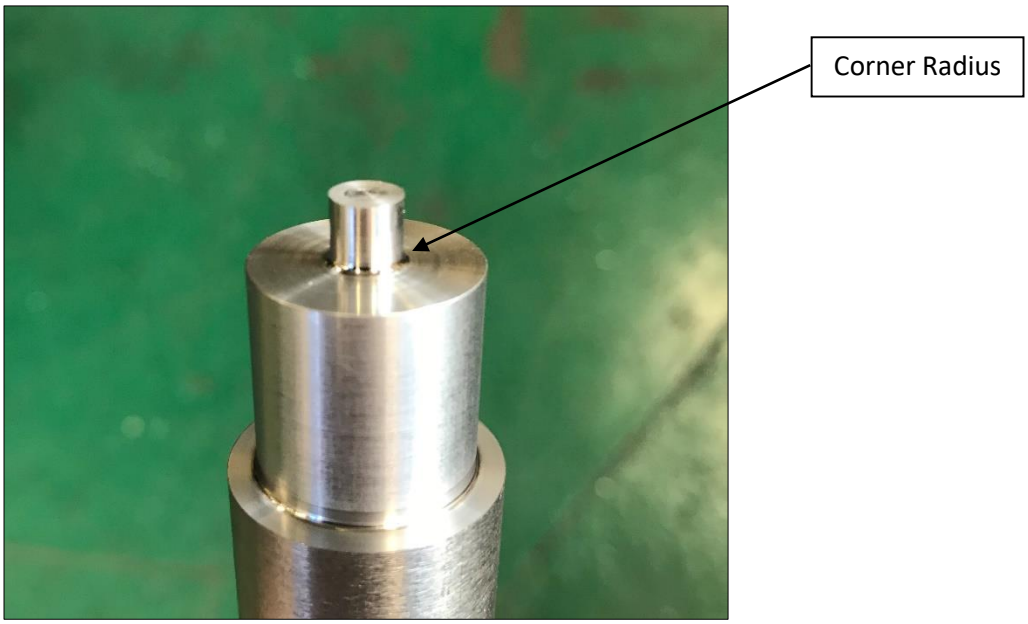

Figure 25 - Parallel tool pin manufacture

Figure 26 - FSW Tool

3.3.5.3 Inspection

Quality assurance of the manufactured tooling is required; each tool was inspected and compared with the original design. It is critical that each tool conforms to the specified tolerance as it is recognised that weld characteristics are highly dependent upon the tool geometry. Uncontrolled variations in the tooling would have detrimental effects on further data and data reproduction (Balachandar, et al., 2020). In the event of tool failure and the need to remanufacture; it is vital that the original specifications are upheld to ensure reliability of results. All dimensions and surface characteristics passed the usual quality assurance checks.

3.3.6 Fixture Design

3.3.6.1 Design

A bespoke welding fixture has been developed through consideration of the following elements:

- Size and shape of material to be welded.
- Need for hassle free material loading, correct positioning and repeatability.
- Milling machine table clamping slots geometry.
- Size and shape of the collet tool holder and the tooling itself.
- Likely forces to be encountered.

The potential process improvements discussed by Ramamoorthi, et al. (2020) when evaluating FSW trials highlight the importance of fixture rigidity and the need for accuracy from the beginning. It is observed that insufficient work piece clamping leads to poor weld quality: The plunge operation forces the two plates apart, introducing an unacceptable gap. The stresses and heat experienced by the material causes plate warping, leading to tool burn through[7]. The rotational force causes the plates to slip and the joint line becomes misaligned with the lateral axis of the machine, causing significantly more stirring in one plate than the other.

An overview of the design is shown in Figure 27, the full technical drawing is available in Appendix 5.

The fixture is manufactured from heavy mild steel plate with the view of ensuring sufficient heat dissipation when in continual use. The ability to bolt directly to the milling machine table through use of the tee slots removes the need for secondary clamping methods. Datum faces are an integral feature of the fixture to enable accuracy and repeatability. The rotation and tightening of threaded screws via a hexagonal key is to exert force upon an aluminium bar which will in turn, spread the clamping force equally across the welding samples.

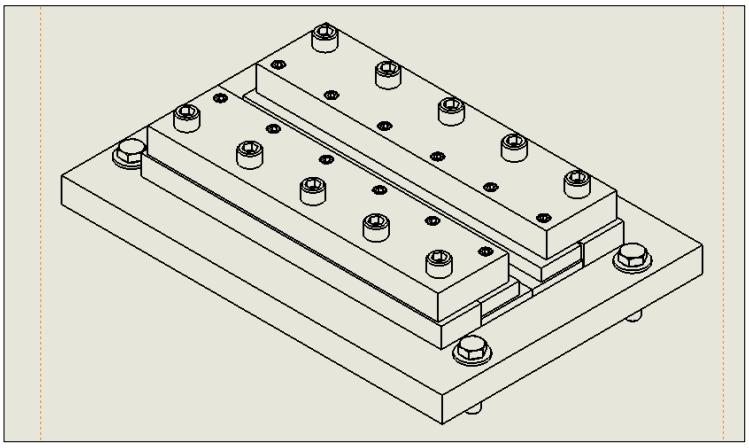

Figure 27 - Fixture wireframe view

[7] Burn through observation, when FSW tool pin is exposed on plate reverse side.

3.3.6.2 Manufacture

Facility production time was allocated for the fabrication and assembly of the fixture. The main components were cut from stock bar material, shown in Figure 28. Datum faces were machined, clearance and tapping holes were drilled and threaded accordingly. The fixture was assembled on the milling machine table in order to use a measuring probe for ensuring parallelism with the lateral axis, each further bolted component would be set and checked by the probe. The fully assembled fixture is shown in Figure 29. Through use of the measuring probe, it is also possible to establish the location of the spindle axis in relation to the datum faces; allowing the fixture to be accurately positioned beneath the tool holder and offset by 50mm to the theoretical centreline of the weld.

3.3.6.3 Inspection

Due to the fixture being a manufactured component, quality assurance is required in the interest of health and safety for the operators. The component passed inspection against the original design by the usual quality assurance process; taking into account, materials, fastener standard, tolerances, sharp edge removal etc. A maximum variation of 0.010mm was measured with the probe between the fixture datum faces and the lateral axis; surpassing the 0.050mm unilateral tolerance needed to maintain spindle axis centre about the theoretical weld centreline.

Figure 28 - Fixture fabrication

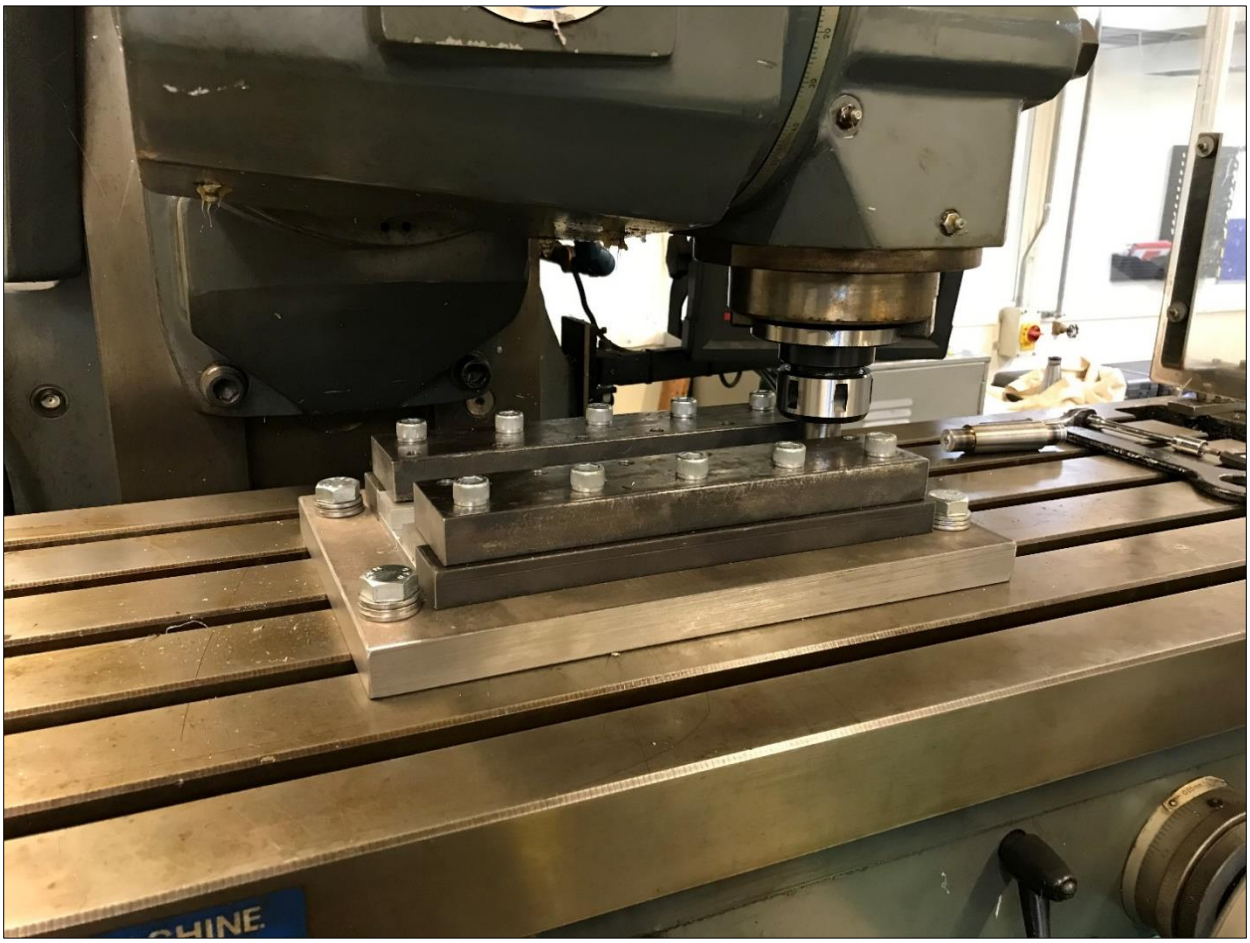

Figure 29 - Assembled fixture

3.4 FSW Trials

The joining of sample aluminium plates was carried out with FSW, MIG and TIG processes in accordance with the following standards:

BS EN ISO 25239:2020 Friction Stir Welding Aluminium. Part 4 Specification and qualification of welding procedures.

BS EN 1011-4:2020 Recommendations for welding of metallic materials, Part 4 Arc welding of aluminium and aluminium alloys.

3.4.1 Setup Parameters

The stock material was cut into fifty lengths of 300mm with the view of welding the long edge of two samples, positioned side by side to form a 100mm wide weld specimen. With tooling, fixtures and equipment set up as previously stated; the samples were clamped against the datum faces, machine parameters were set to the lowest identified value and attempts were made at welding with tool 1, shown in Figure 30.

Several initial attempts were made at plunging into the material, reaching the correct depth and traversing a short distance; z axis values were noted on each run and compared with the level of surface contact achieved and surface condition after removal of the tool. The following was determined from analysing the z axis plunge depths:

- From 0.000mm to -0.100mm, insufficient force exertion by tool shoulder.
- Optimum plunge depth from -0.100mm to -0.150mm, level weld surface.
- From -0.150mm to -0.250mm, excessive depth.

Only partial stirring was achieved due to insufficient force exertion by the tool shoulder; the plastic stirring deformation must be continual. Intermittence of the process causes fouling of the tool shoulder, resulting in an irregular weld surface, shown in Figure 32. A fouled tool shoulder with deposits of weld material is shown in Figure 31. Excessive depth would result in a detrimental stepdown at the stirred zone; being unsightly, introducing sharp included edges and reducing the cross sectional area of the specimen about the weld zone, shown in Figure 33. Clean welds that were level with the top surface of the plates were achieved at the optimum depth throughout the range of traverse feed rates and tool rotation speeds.

Once the process had been initialised, automatic depth limits were set to ensure the optimum value was maintained on every weld. The tool temperature was monitored throughout with a handheld IR device. Jacquin & Guillemot have presented in their thermal study on FSW (2019); tools are expected to experience temperatures that are up to 75% of the material's melting point as an indication of suitable friction being generated. Monitoring plate temperature is problematic due to the influence of various fixture and backing plate heat dispersion rates.

- Temperature observed in tool throughout all FSW passes: 400°C ±25°C
- Aluminium 6082 melting point 550°C
- 75% of the melting point = 412.5°C
- The observed tool temperature is in accordance with the study.

Weld specimen production parameters are shown in Table 12 for FSW only. MIG and TIG processes are also used to provide comparison with FSW; parameters are shown in Table 13. A successfully welded specimen of plate ID 5 is shown in Figure 34.

Figure 30 - Initial FSW setup

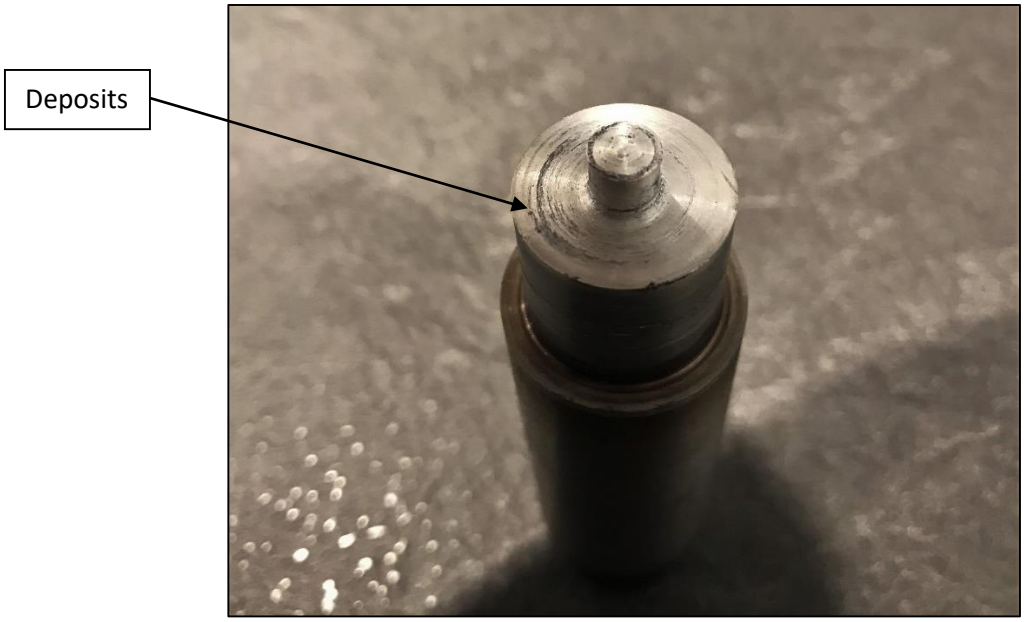

Figure 31 - Tool shoulder deposit

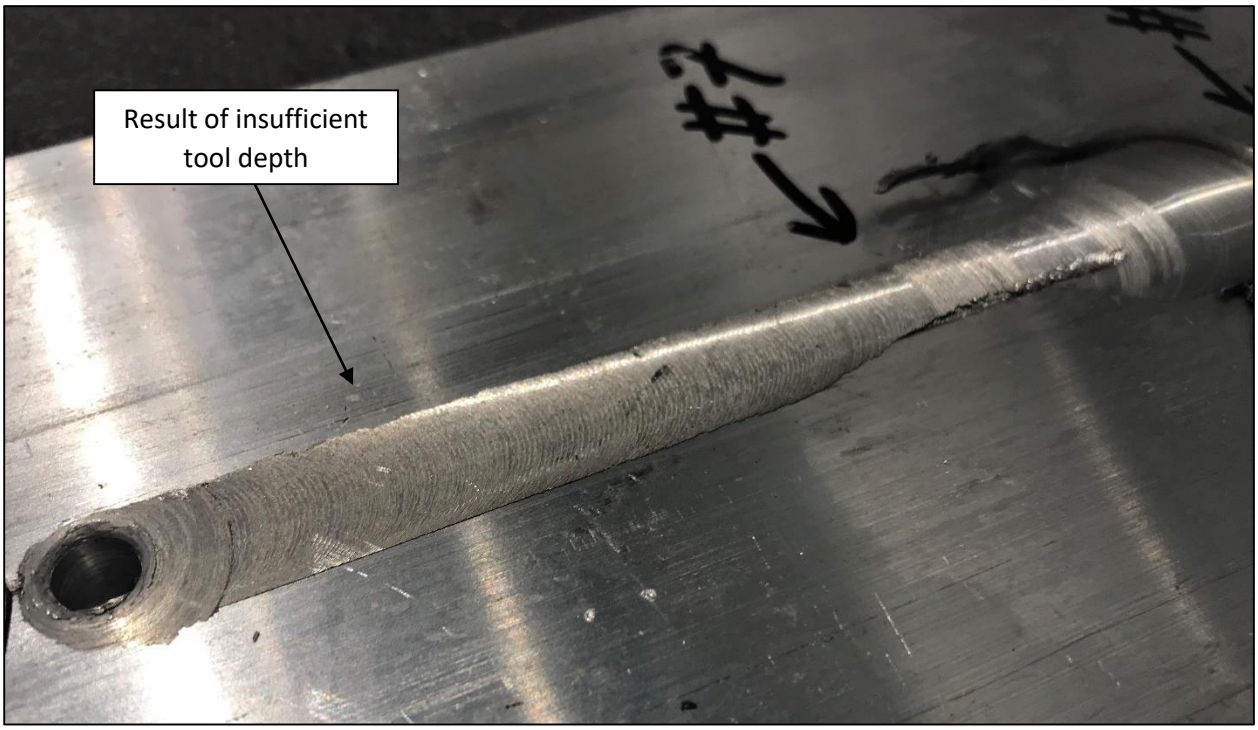

Figure 32 - Shallow tool depth

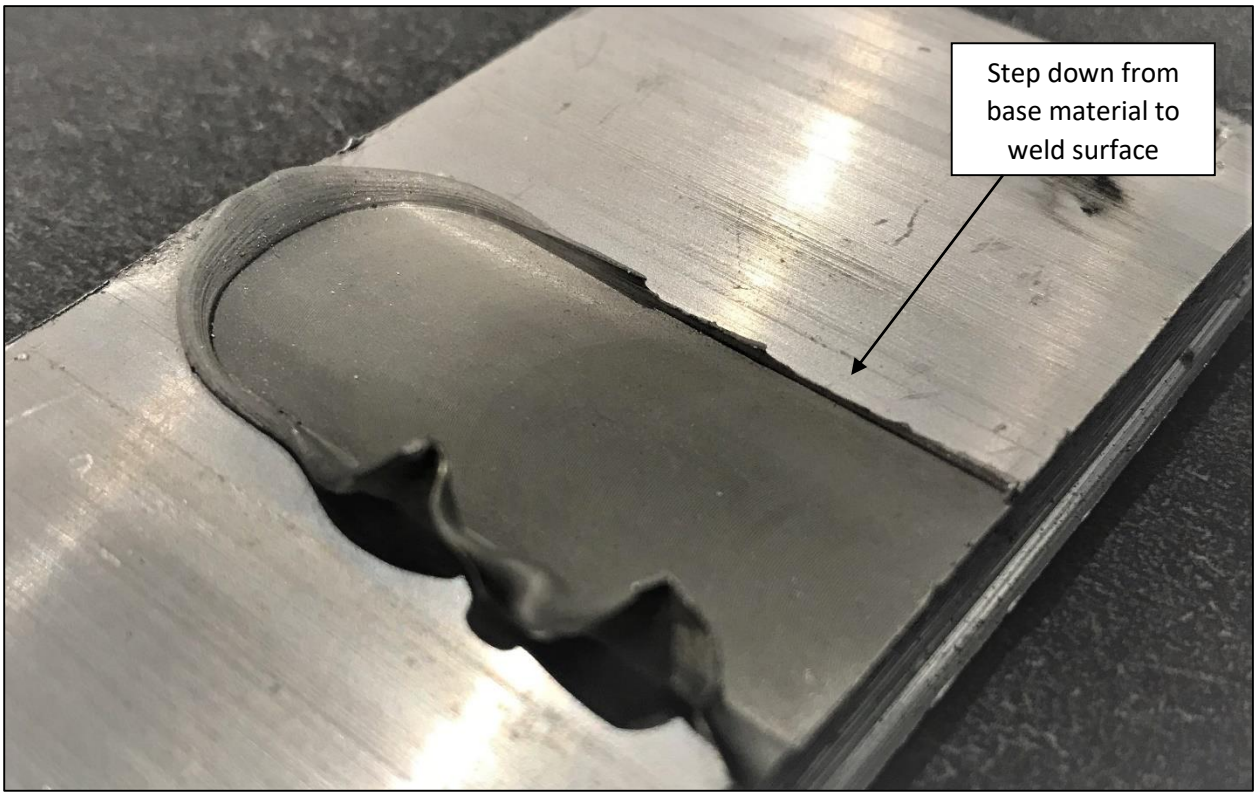

Figure 33 - Deep tool depth

Table 12 - FSW Trial Parameters

Plate ID	Tool Rotation Speed rpm (C axis)	Feed rate mm/min (X axis)	Tool Number	Initial Visual Observations
1	450	53	1	Poor weld surface.
2	450	86	1	Tool failure during plunge.
3	450	86	2	Cleaner then weld 1.
4	450	86	3	Improved surface.
5	450	116	3	Further improved.
6	450	149	3	Shear on traverse, result of high feed.
7	560	86	3	Tool slip.
8	560	86	3	Reflective surface, best.
9	560	116	3	Good.
10	710	86	3	Reduced surface.
11	710	116	3	Improved.
12	900	86	3	Rough finish.
13	710	86	4	Rough surface, reduced plunge resistance.
14	710	116	4	Improved, reduced plunge resistance.

Table 13 - Conventional Welding Parameters

Plate ID	Process	Welding Current Amps	Filler Diameter mm	Filler feed rate m/min	Traverse speed m/min
T	TIG (Single run)	280	3.2	1.5	0.225
MT	Multi-pass TIG (Root run + 2x cap runs)	220	3.2	0.5	0.075 (Average) 0.225 (Each run)
M	MIG (Single run)	200	1	12	0.4
Welding voltage for all arc processes: 20v					

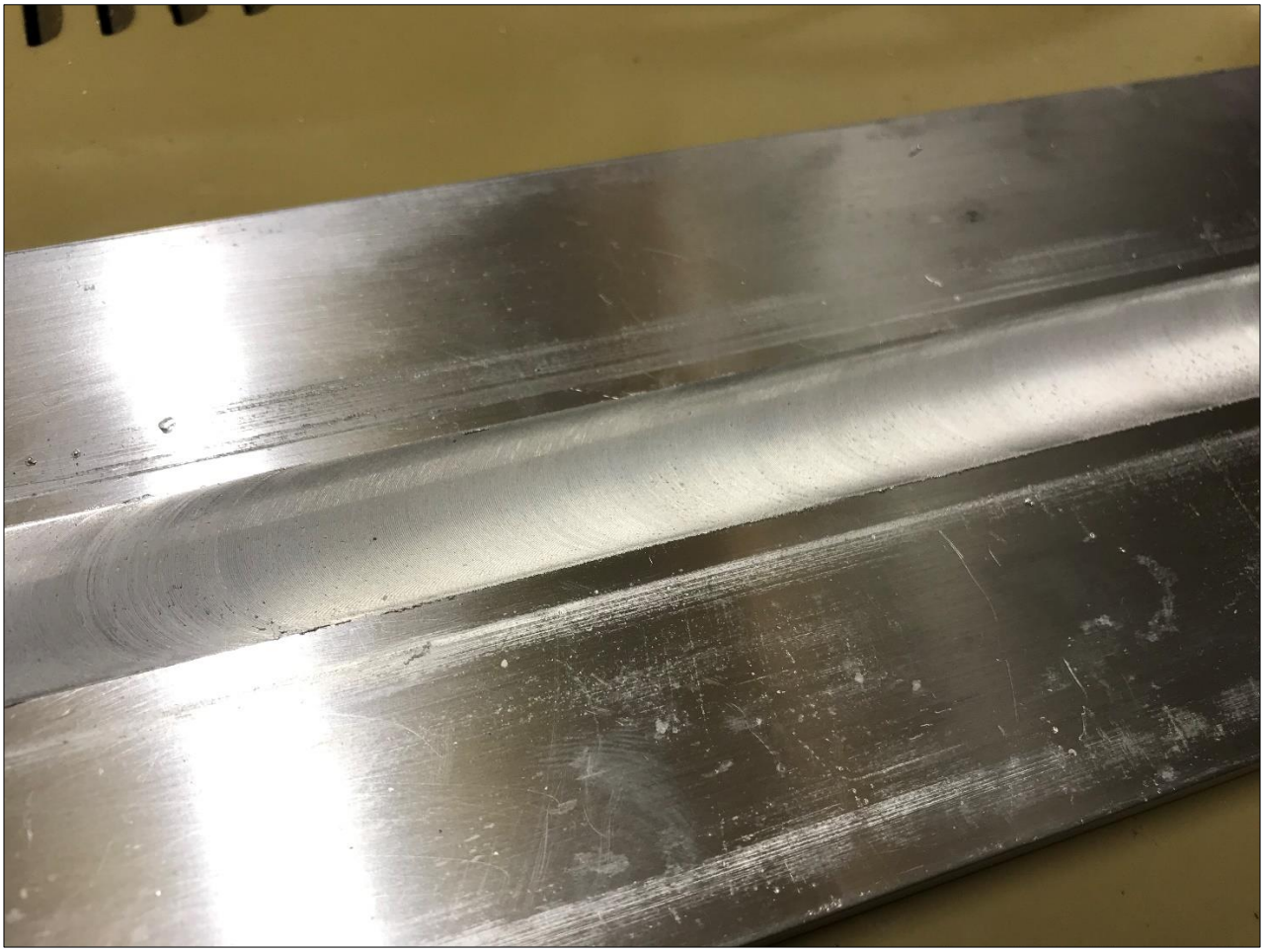

Figure 34 - Successful FSW

3.4.2 Observations

With reference to the observations made during the trials shown in Table 12:

- Tool 1 provided fusion of the joint and a rough surface profile.
- Tool 2 provided fusion through 80% of the plate thickness.
- Tool 3 enabled full depth fusion when coupled with suitable parameters; surface quality declined significantly with a raise in tool rotation speed.
- Tool 4 initiated an auger action during plunge phase resulting in excessive material deformation towards the surface, the surface quality was reduced when compared to the results of tool 3.

The process parameters were optimised for best surface quality at 560rpm and 86mm/min. FSW surface swarf is best avoided as it is generated from the parent material, shown in Figure 35.

Best quality characteristics as shown in Figure 34 were determined to be:

- Complete, evenly spaced weld contours produced by a combination of correct traverse rate and tool rotation.
- Smooth transition between weld zone and plate surface.
- Reflective surface finish.
- Full plate depth fusion.
- No surface swarf.

The conventional weld specimens produced were to the usual production standard of the facility. The major differences being the weld procedure requirement for a complete edge chamfer on both plates. Preparation was carried out on a manual milling machine and manual clamping was used to position the plates appropriately, shown in Figure 36 and Figure 37 respectively.

3.4.3 Failures

Tool pin failure was observed on the second use of the threaded tool, during the plunge phase. The sheared section of thread rotated with erratic motion causing plunge hole widening, shown in Figure 38. The thread form tool pin is susceptible to failure under high stress due the nature of sudden geometrical changes creating critical stress concentrations. The tool was reworked into a parallel pin tool and the material was salvaged by removing the damaged area.

The parallel tool pin failure observed in plate 6 identified the upper traverse rate limit for the given state; 149mm/min was not used again during the process to reduce the likelihood of tool failure. Plate 7 parameters were repeated for plate 8 due to the tool slipping within the collet holder; this was only observed once.

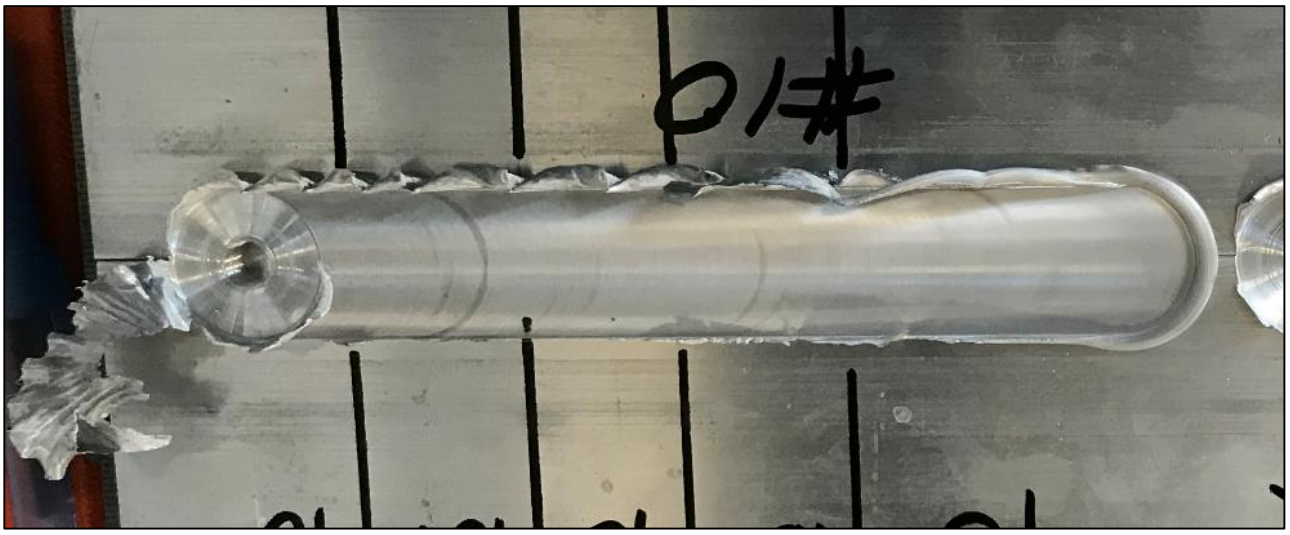

Figure 35 - FSW surface swarf

Figure 36 - Sample edge preparation

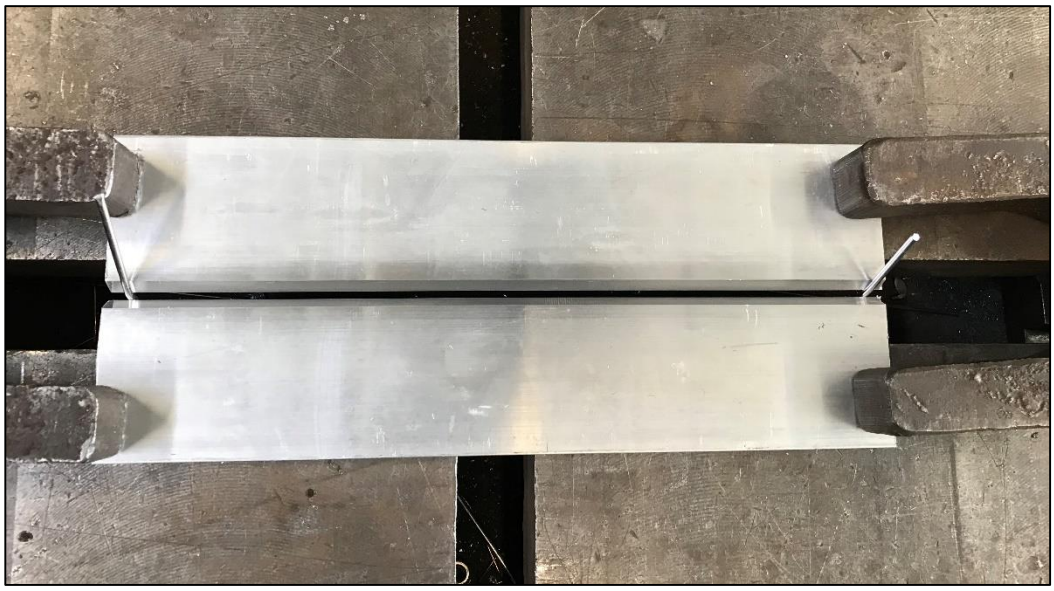

Figure 37 - Conventional weld setup

Figure 38 - Tool pin failure during plunge

4. Findings

4.1 Weld Testing

The welded specimens have been evaluated in terms of tensile strength, hardness and microstructure in order to establish the optimum parameters for further application.

4.1.1 Tensile Testing

4.1.1.1 Equipment

The QinetiQ Farnborough materials testing lab provided access to the Zwick/Roell 1484 200kN universal testing machine to conduct tensile analysis, shown in Figure 39. Load and extension data was processed through the testXpert II interface and outputted to a MS Excel workbook file. Instantaneous load and head displacement was viewed on the display during testing to pre-empt each run time, shown in Figure 40. A specified crosshead travel rate of 0.5mm/min was used: allowing sufficient time to collect data points is critical for developing accurate load/extension curves (BSI, 2019b). Instron plate grip wedges were used to clamp the samples to the machine, shown in Figure 41.

Figure 39 - Zwick/Roell 200kN UTM

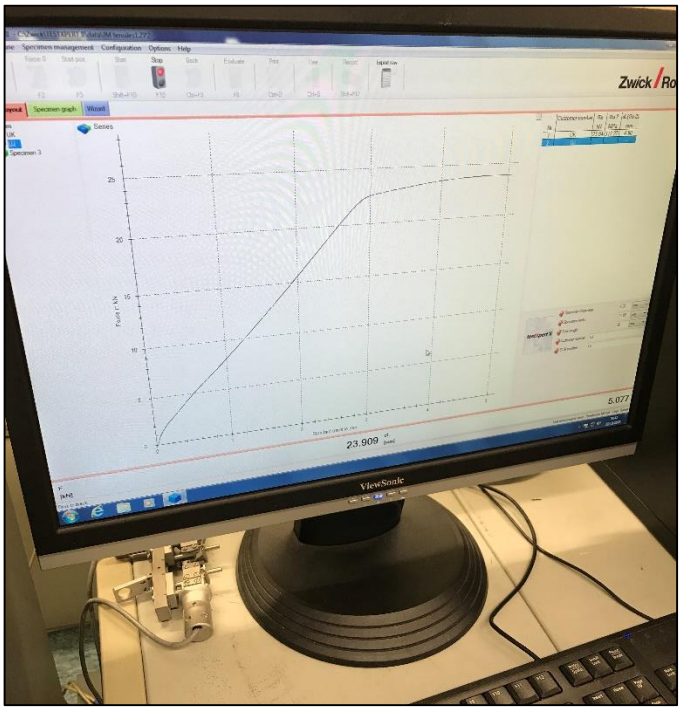

Figure 40 - TestXpert II interface display

Figure 41 - Instron plate wedge grips

4.1.1.2 Sample Preparation

The tensile samples were prepared in accordance with BS EN ISO 6892-1:2019; the specification used is shown in Figure 42. The maximum possible sample length was 102mm, due to the joining of two 50.8mm (2”) plates side by side. The weld specimens were cut to width on a bandsaw with flood coolant to prevent heating; then machined to specification on a turret milling machine with compressed air coolant and local forced extraction. The preventative measures for heating ensured the temper state of the samples were not altered; shown in Figure 44, Figure 45. All sharp edges were removed and both ends of the sample where stamped with unique identification. As described in the standard, the cross sectional area is the critical dimension; values were measured and it was established that the samples conformed to the 0.1mm maximum variation in width, shown in Figure 43. The overall deviation is within the stated tolerance. Negligible variation was observed in the plate thickness; 0.01mm or less (BSI, 2019b).

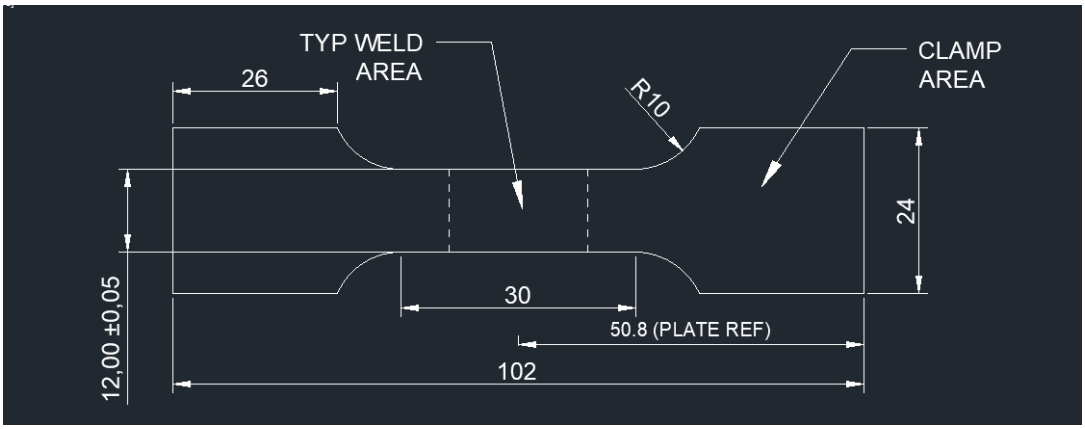

Figure 42 - Tensile sample specification

Figure 43 - Tensile sample variation chart

Figure 44 - Weld specimen cutting

Figure 45 - Tensile sample machining

Figure 46 - Prepared tensile sample

4.1.1.3 Testing Results

Tensile data was collected for the supplied material[8] and all successfully welded specimens. Two tensile samples were produced for each plate specimen, details of which are shown in Table 14. Fracture observations reveal that all tensile samples failed about the stirred area, or the centre of the reduced section in the case of non-welded samples. Cracking would initiate on the back side of the plate and propagate towards the weld surface, between the thermomechanically affected zone and the heat affected zone.

A reduction in cross sectional area about the centre of the sample and crack initiation at the back face is shown in Figure 47. The cup and cone fracture characteristic is observed when raw material samples are pulled, shown in Figure 48. Raw, un-welded samples are pulled for calibration purposes and to accurately compare weld performance against the parent material.

Table 14 - Tensile Test Results (3 d.p.)

Specimen Plate ID	Sample ID	Max Force kN	Max Stress MPa (UTS)	Crosshead travel at failure mm
Supplied Material	UJ	23.929	317.337	4.930
	UK	23.943	317.266	4.905
FSW 1	1J	12.412	169.460	3.107
	1K	12.282	166.582	3.010
FSW 3	3J	14.535	194.334	3.534
	3K	14.373	192.495	3.650
FSW 4	4J	16.314	219.514	4.897
	4K	16.049	215.658	4.787
FSW 5	5J	16.532	222.076	4.709
	5K	16.439	221.009	4.668
FSW 8	8J	14.434	193.886	2.953
	8K	14.328	191.854	2.922
FSW 9	9J	11.951	164.760	2.256
	9K	14.669	203.418	3.261
FSW 10	10J	12.482	171.238	2.462
	10K	10.151	139.372	2.257
FSW 11	11J	13.500	190.663	3.489
	11K	13.350	188.875	3.330
FSW 13	13J	10.060	135.274	1.843
	13K	13.906	186.376	3.176
FSW 14	14J	12.113	161.149	2.450
	14K	12.342	164.193	2.637
MIG	MJ	9.038	119.657	1.769
	MK	8.586	115.518	2.167
TIG	TJ	11.701	156.286	2.541
	TK	11.029	149.485	2.550
Multi TIG	TMJ	13.492	175.443	5.813
	TMK	12.810	173.624	5.570

[8] Supplied material testing as mentioned in sub-section 3.3.2 Material Composition.

Figure 47 - Loaded tensile sample

Figure 48 - Pulled sample UK

From the results, stress and strain values where calculated in the following way:

Stress:

$$Stress\ Pa = \frac{Tensile\ Force\ N}{Area\ of\ reduced\ section\ m^2}$$

Where:

$$Area = Sample\ thickness\ \times Width\ of\ reduced\ section$$

Specifically:

$$0.00007378m^2 = 0.0062m\ \times 0.0119m$$

Strain:

$$Strain\ \varepsilon = \frac{Extension\ of\ sample\ mm}{Original\ gauge\ length\ mm}$$

Where:

$$Original\ gauge\ length = 30mm$$

The graphical representation of all resulting stress and strain values are shown in Figure 49 with the following observations:

- Base material samples UJ & UK set the target values for devised welding methods.
- The multi pass TIG weld TMJ shows least conformity; the majorly increased heat input has allowed recrystallisation for a significantly longer period, resulting in lower strength and increased ductility.
- Samples taken from weld specimens 4 & 5 display high correlation with one another and improved conformity with the target values when compared with remaining results.
- All welded samples have experienced a minimum two thirds reduction of the elastic capacity; permanent deformation begins at significantly lower stress.

A focused comparison of conventional welding processes, base material and highest value FSW is shown in Figure 50.

- The ultimate tensile strength exhibited by the FSW sample 5J is 70% of the target value.
- Multi pass TIG, 55.2% of the target value.
- Single pass TIG, 49.2% of the target value.
- Single pass MIG, 37.5% of the target value.
- The yield strength (limit of proportionality) for the target base material is 295MPa.
- The yield strength exhibited by the FSW sample 5J is 120MPa, 40.7% of the target value.
- Single pass TIG 100MPa, 33.9%
- Single pass MIG, 90MPa, 30.5%
- Multi pass TIG 80MPa, 27.1%

In terms of FSW, it is clear to see that a set of optimal parameters have been identified; these values hold highest correlation with the base material characteristics.

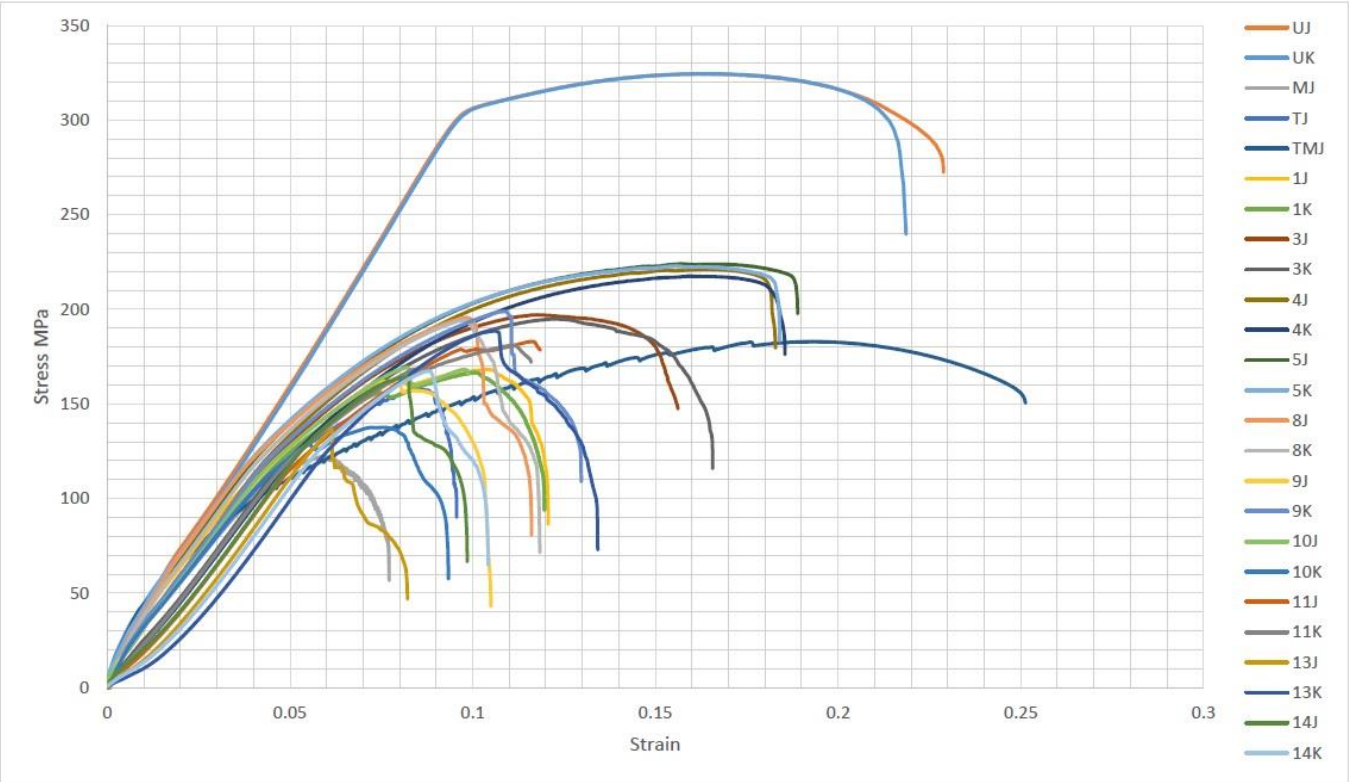

Figure 49 - Stress strain graph, all results

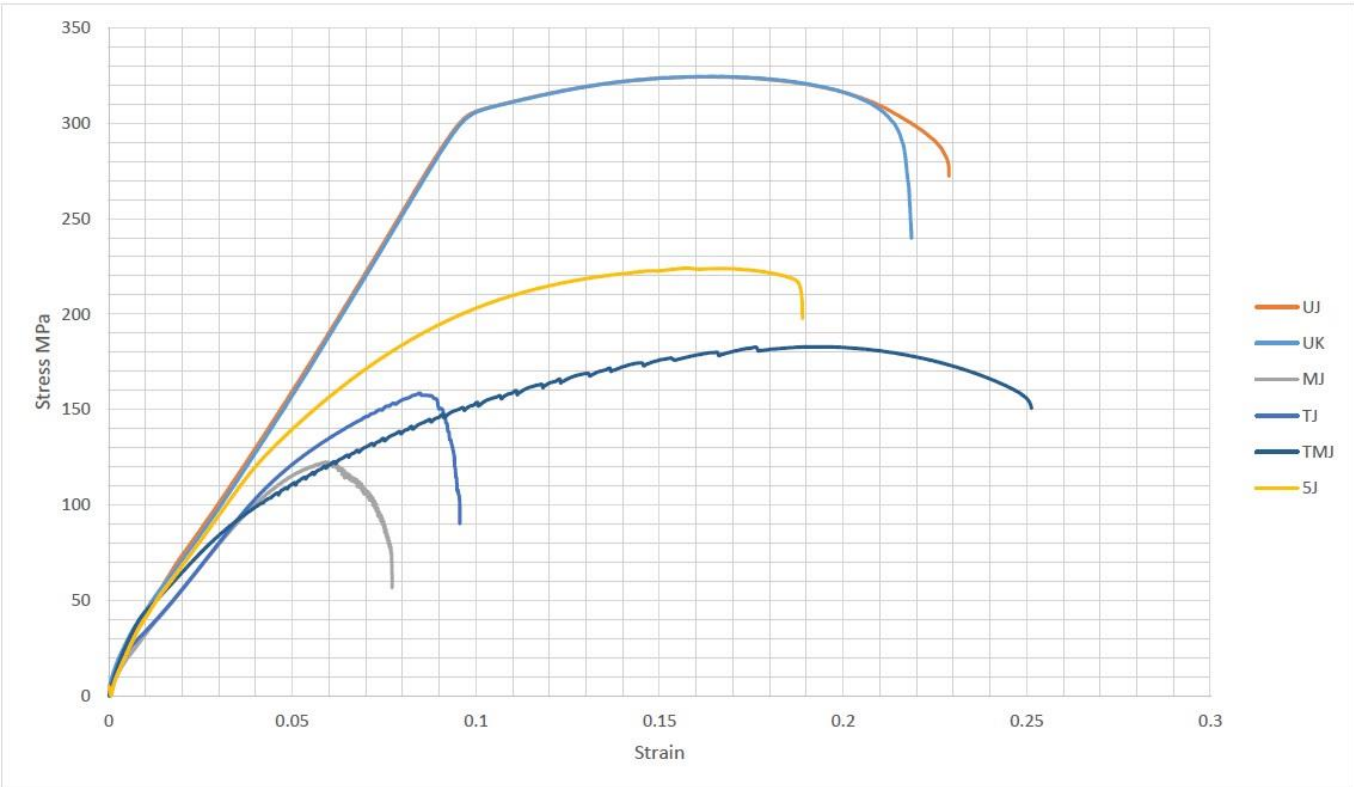

Figure 50 - Stress strain graph, focused comparison

4.1.2 Hardness Testing

4.1.2.1 Equipment

The QinetiQ Aberporth Vickers pyramid hardness testing machine shown in Figure 51 was used to attain comparable hardness values for all specimens discussed previously. Hardness testing was conducted in accordance with BS EN ISO 6507-1:2018. The test works on the principle of measuring the impression width created by the square-based pyramid diamond indenter; the angle between opposite pyramid faces is 136°. The width is presented as a micrometre value through the ocular display; the following formula is applied to attain Vickers hardness:

$$HV = 0.1891 \times \frac{Force\ Applied\ (N)}{Width\ of\ impression\ (mm)}$$

The machine was calibrated against two specified Avery Dennison samples of known hardness with an applied force of 294.2N; delivered by a 30 kg mass, shown in Figure 52. An impression measuring 314 µm: 561HV is shown in Figure 53. A maximum variation of 0.5HV was observed between the measured values and known values; which is within acceptable limits (BSI, 2018).

Figure 51 - Vickers Hardness Testing Machine

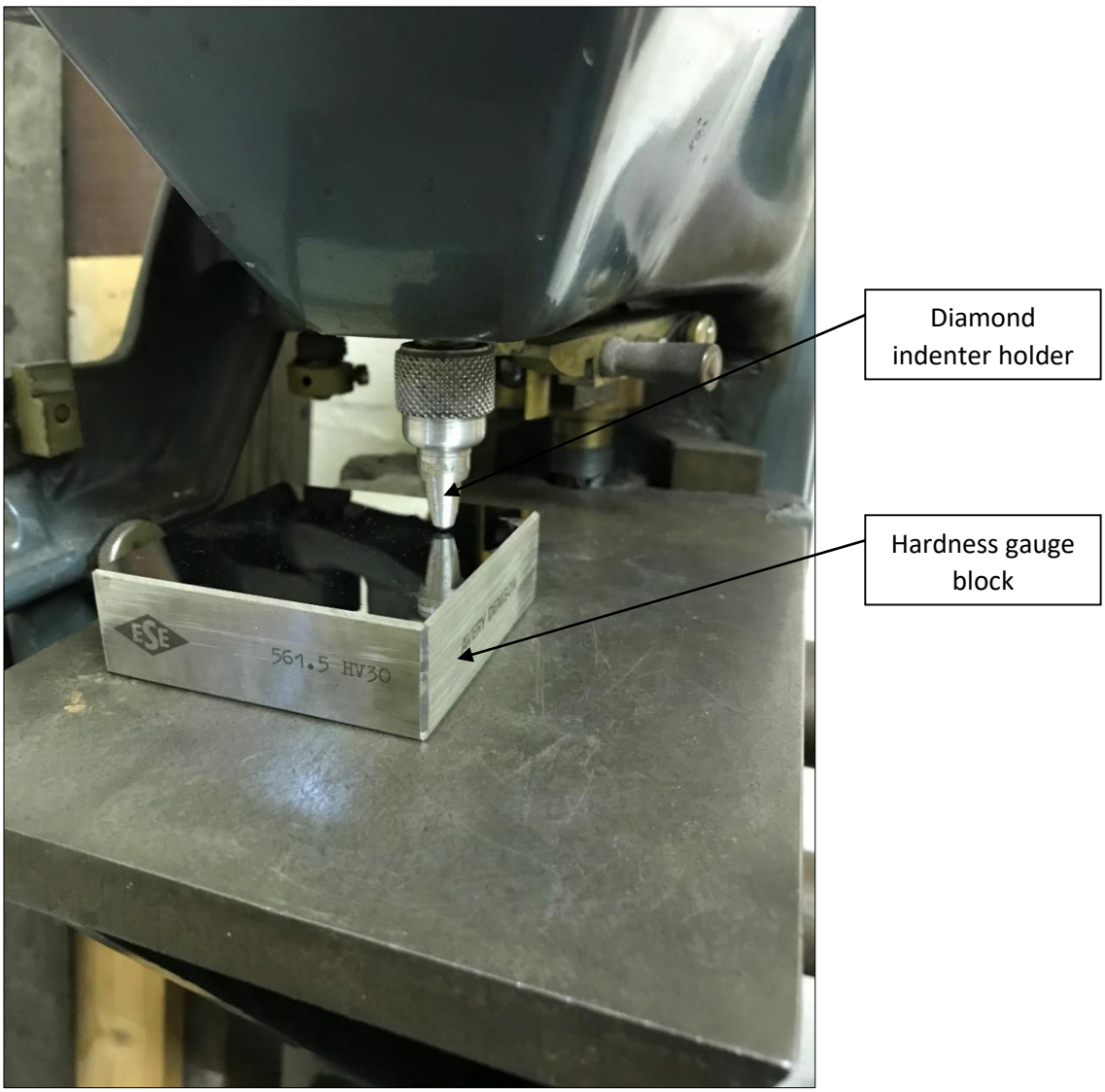

Figure 52 - Indenter and calibration standard

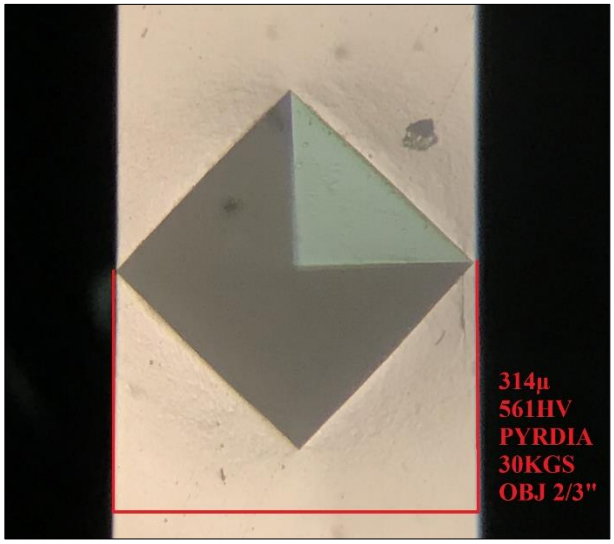

Figure 53 - Vickers Calibration Indentation

4.1.2.2 Sample Preparation

Hardness samples were prepared in accordance with BS EN ISO 6507-1:2018. Following the same method for taking weld specimen samples as discussed previously; the sample edges were machined flat along an edge for inspection, controls were implemented to ensure no sample heating was permitted.

Figure 54 and Figure 55 show the specific regions produced by arc welding and FSW respectively that were tested for hardness.

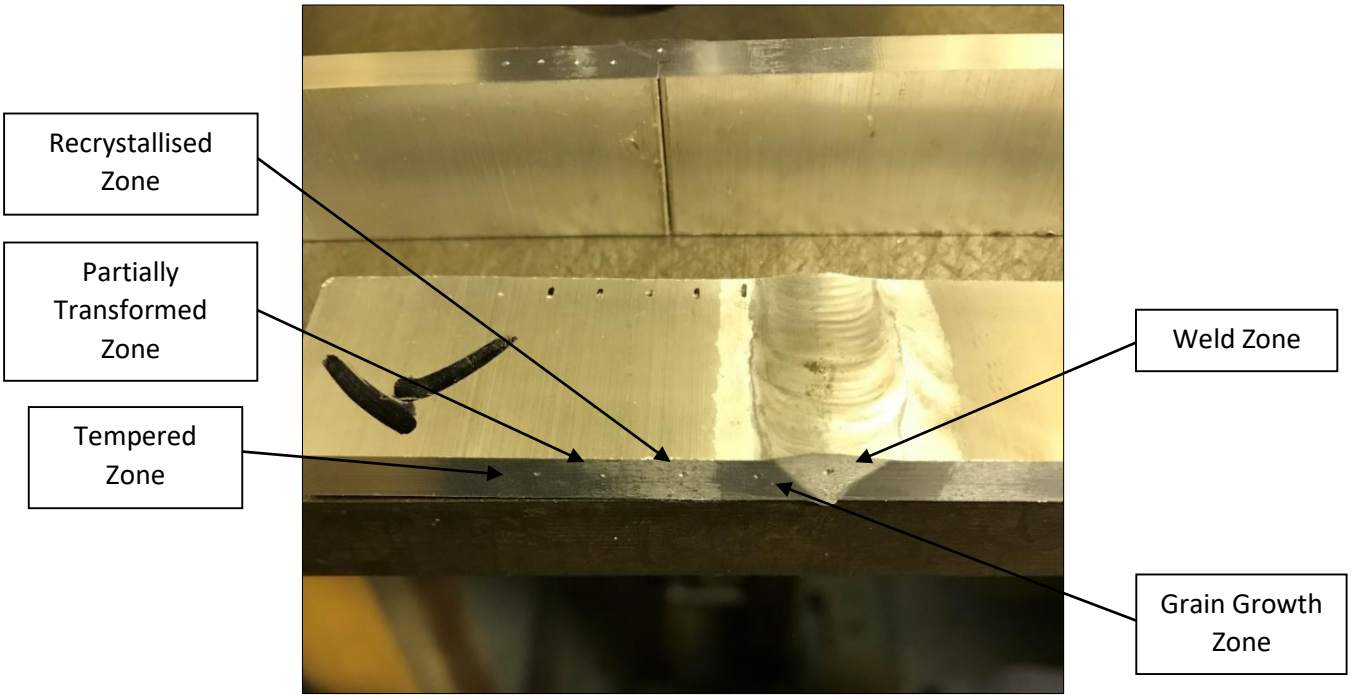

Figure 54 - Arc welding hardness sample

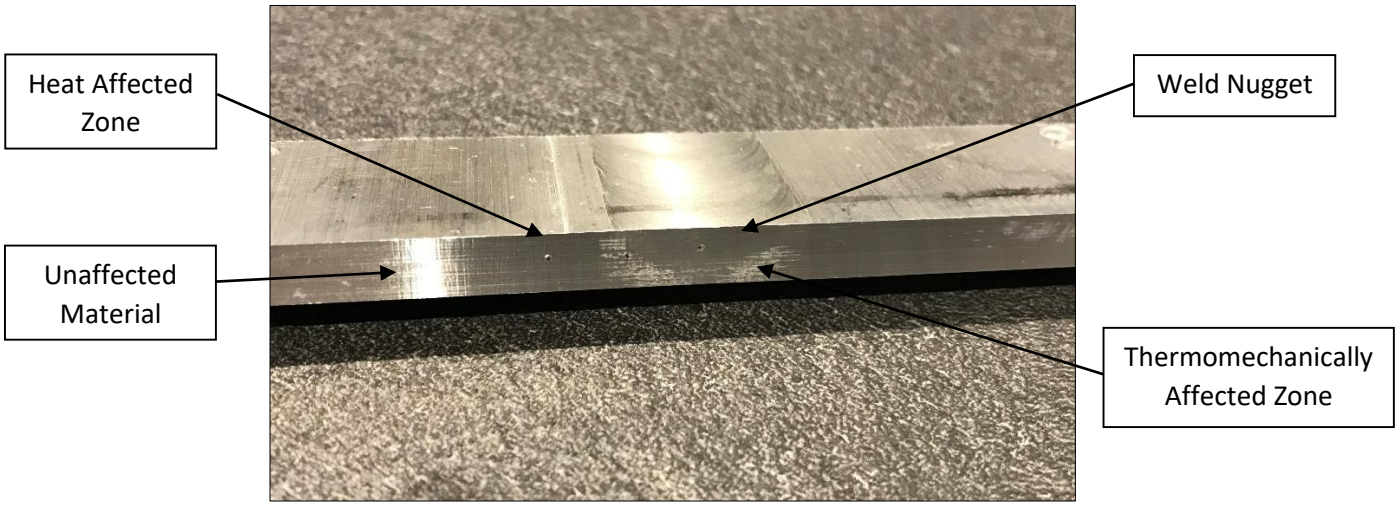

Figure 55 - FSW hardness sample

4.1.2.3 Testing Results

The samples were tested, the values were interpreted through use of the formula and the results are plotted on a graph comparing Vickers hardness against the distance from centre of the weld, shown in Figure 56 and Figure 57 respectively. The following observations are made:

- Base material, sample U displays the consistent hardness value HV104, equating to 90 Brinell.
- Common trend, softened weld fusion zone (arc welding) and TMAZ (FSW), further softening into the HAZ, restoration of original hardness as HAZ influence reduces further away from the joint.
- High correlation between all FSW regardless of process parameters.
- Hardness vales for arc welding samples are directly linked to the amount of heat input; the multi pass TIG being the process requiring most heat has experienced most tempering, or reduction of hardness.
- Arc welding processes and FSW produce a maximum HV10 differentiation between one another.
- All FSW and MIG process return to original hardness condition 16mm from the joint.
- Both TIG processes will require an additional minimum 10mm to return to original hardness condition; following a linear relationship between effect of temperature over distance.
- For the multi pass TIG, the high ductility shown in Figure 50 can be attributed to the high level of softening due to high heat input.
- Sample 5 (highest tensile result) displays a maximum variance of HV35 within the area of recrystallisation.

Figure 56 - Quantifying indentations

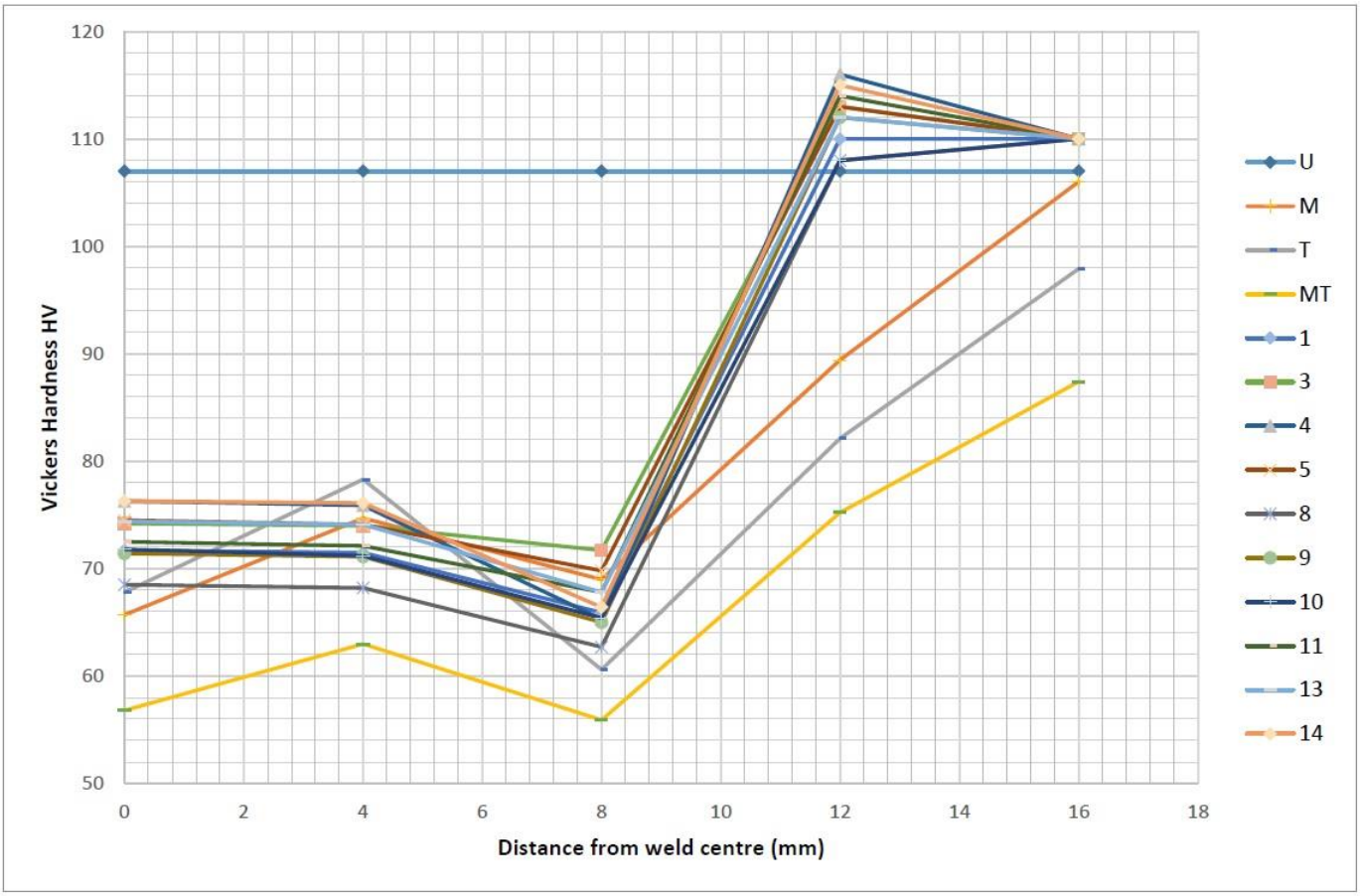

Figure 57 - Vickers Hardness Results Graph

4.2 Visual

4.2.1 Surface finish

The surface profile of FSW is an important characteristic; relationships exist between overall weld strength and surface quality (Zuo, et al., 2018). Sample 5 and 13 are shown in Figure 58 and Figure 59 respectively; the parameters of sample 5 have enabled a satisfactory finish where sample 13 displays areas where the surface profile has been disturbed on the retreating side of the tool. The tensile results confirm the relationship between strength and surface finish in this case.

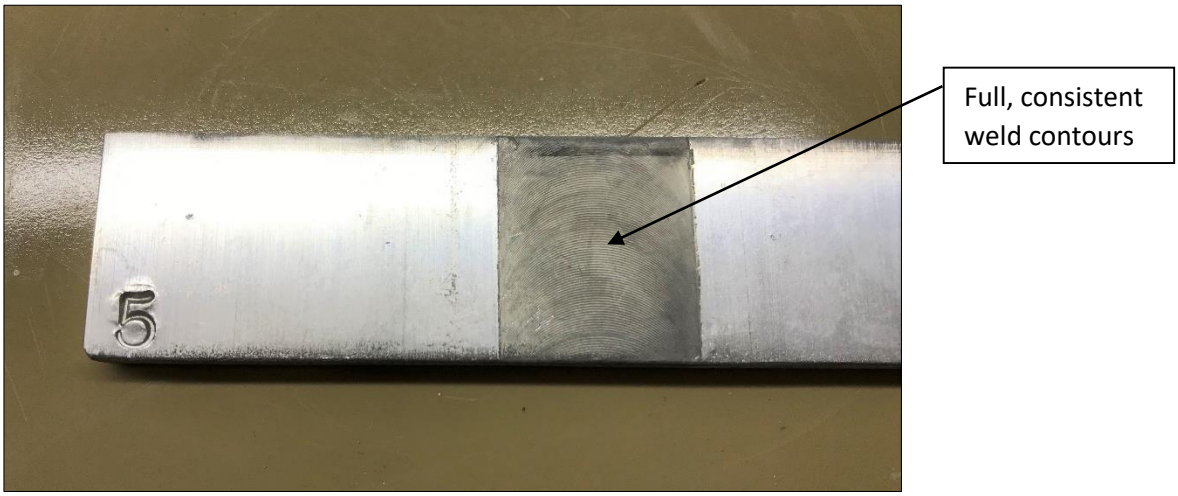

Figure 58 - Surface sample 5

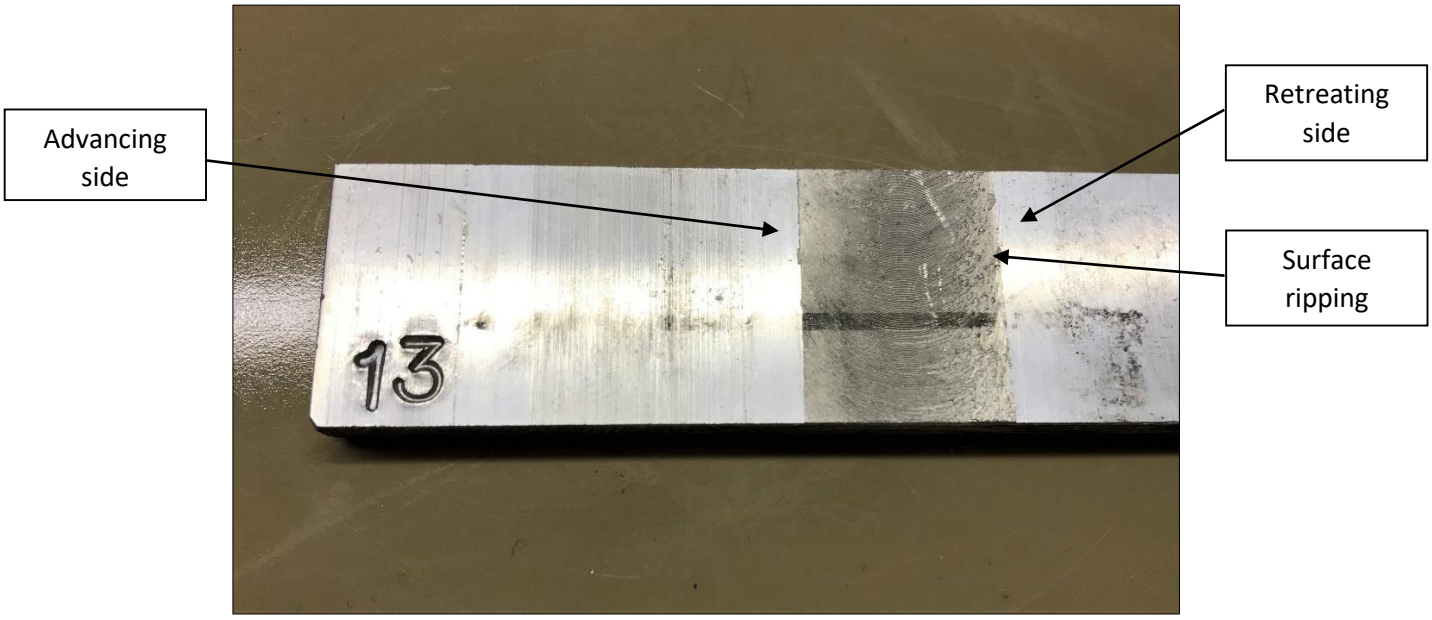

Figure 59 - Surface sample 13

4.2.2 Macrostructure

The macrostructure of welded joints was revealed by soaking the prepared surface with modified Keller's etchant (2.5ml HNO3, 2.5ml HCl, 2.5ml CH3OH). Surfaces where prepared by working through abrasive grades; 320, 500, 1000, 1500, 2000 followed by the application of 1-micron diamond abrasive paste to complete (PACE Technologies, 2021). The samples of interest did not reveal any internal defects. FSW sample 5 shows gradual changes in phase where the TIG sample shows prominent changes, Figure 60 and Figure 61 respectively.

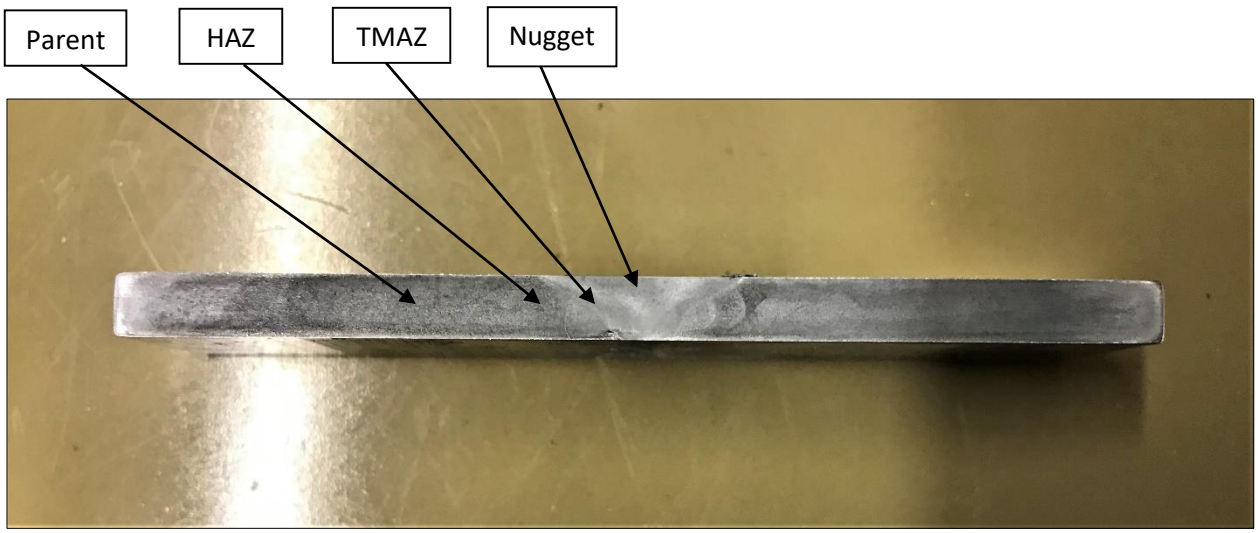

Figure 60 - FSW 5 macrostructure

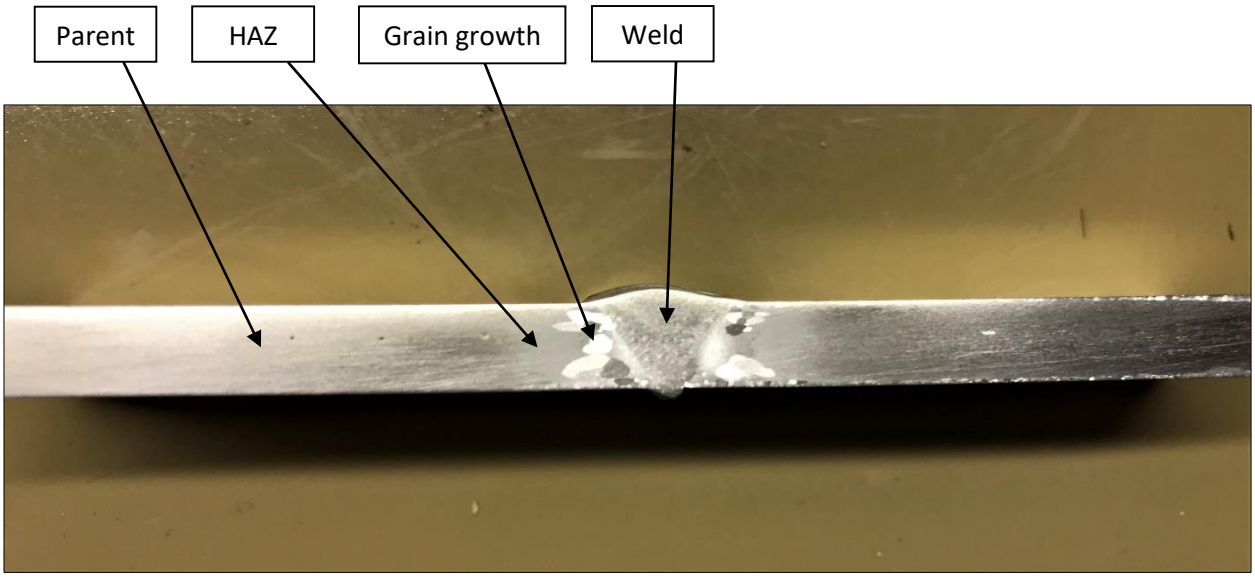

Figure 61 - TIG macrostructure

4.2.3 Microstructure

In order to observe phase changes adequately under a light microscope a second modification was made to Keller's etchant (2.5ml HNO3, 5ml HCl, 2.5ml CH3OH); both reagent variations were applied consecutively. Phase boundaries are shown between HAZ and TMAZ for sample 5, HAZ and weld region for the TIG sample, Figure 62 and Figure 63 respectively. The reduced angle of phase change in FSW increased the area in which stress is translated through the material, enabling higher resistance to tensile loading (Krasnowski, et al., 2015).

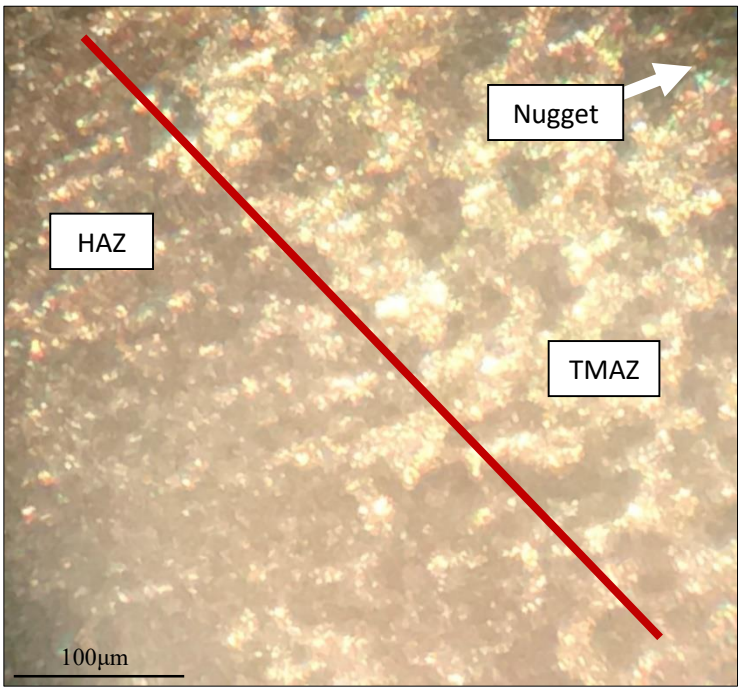

Figure 62 - FSW Sample 5 HAZ TMAZ interface

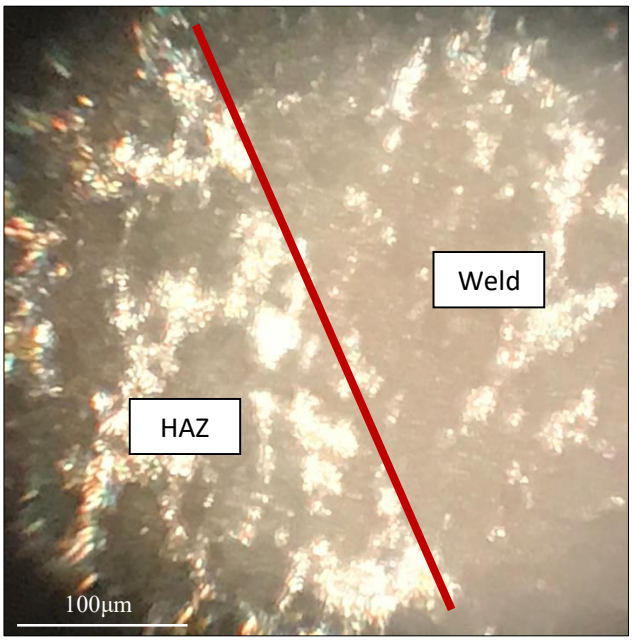

Figure 63 - TIG Sample HAZ Weld interface

5. Analysis

5.1 Practical Application

In order to prove the potential design efficiencies available from the use of FSW, a study of the application of conventional arc welding and FSW is carried out.

5.1.1 Components

With reference to the structure described in Figure 1; the most suitable weld joint is considered for improvement. The structure section of interest is highlighted in blue, shown in Figure 64; sub-assembly is isolated from the main assembly for analysis and shown in Figure 65.

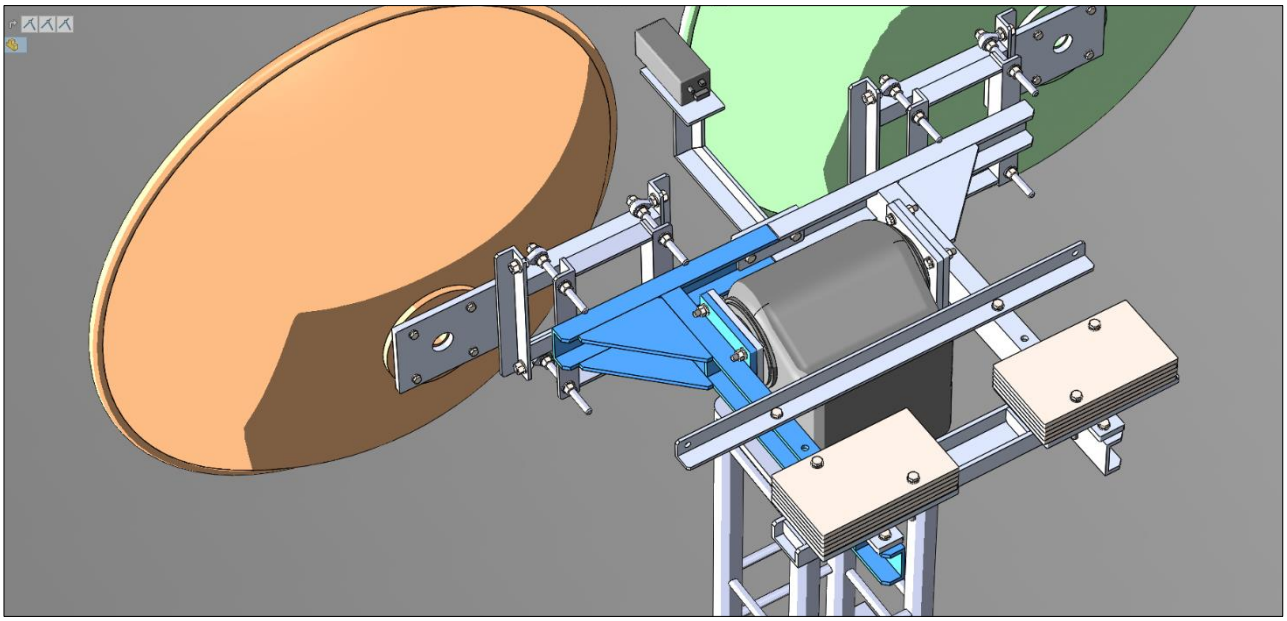

Figure 64 - Antenna support framework

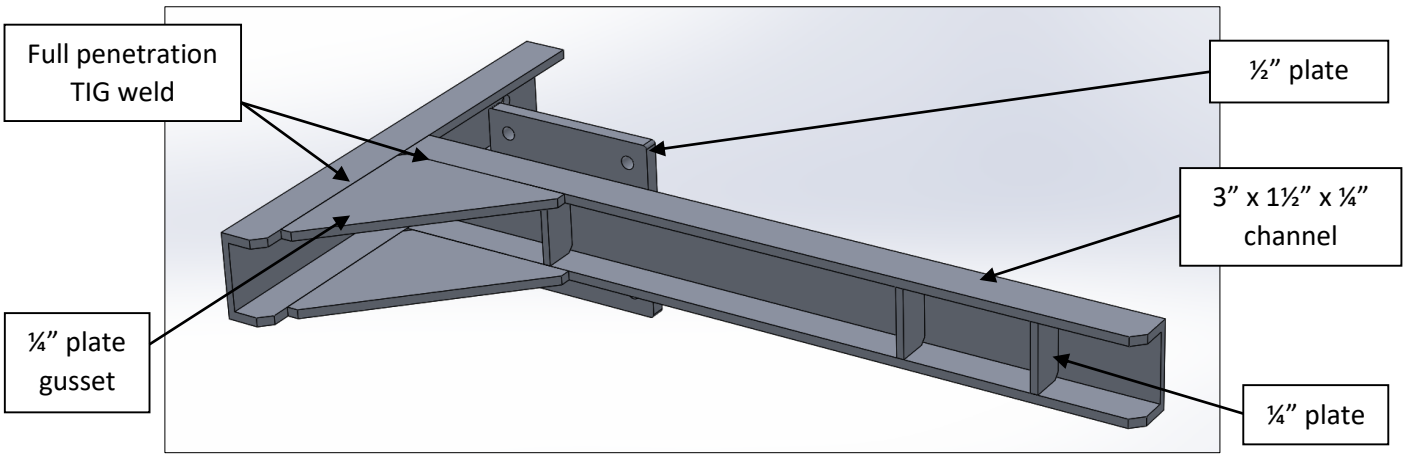

Figure 65 - Isolated sub-assembly

5.1.2 Forces

The original design for the aluminium antenna support structure was developed in line with BS EN 1999-1-1:2007, Design of aluminium structures- general structural rules. The current design utilises the multi pass TIG welding process which delivers an actual yield strength of 80MPa on the 6.2mm plate material, the reduction in strength from the original supplied material form is caused by heat exposure.

A factor of safety of ten is required for this tower component in order to mitigate the failure risk of the particular weld type; accounting for likely encountered external forces and the achievable strength of the manufactured structure (BSI, 2007).

Maximum allowed stress within structure:

$$Max\ allowed\ stress = \frac{Material\ Tensile\ Strength^{9}}{Factor\ of\ Safety}$$

Specifically:

$$29.5\ N/m^2 = \frac{295\ N/m^2}{10}$$

Maximum force:

$$F = \frac{1}{2}\rho v^2 A$$

Specifically:

$$8125N = \frac{1}{2}(1.3kg/m^3) \times (50m/s)^2 \times (5m^2)$$

Where:

$\rho = Air\ density\ (kg/m^3)$

$v = Wind\ speed\ (m/s)$

$A = Surface\ area\ of\ dish\ antennas\ (m^2)$

5.1.3 TIG Weld Optimisation

The finite element stress analysis shown in Figure 66 has isolated the structural members in question and applied the maximum force at the outermost antenna fixing location; it is clear to see a maximum stress of 28.44MPa is present within the gusset, which obeys the safety factor (Max 29.5MPa). Notably, an area of

[9] Aluminium 6082 tensile strength as provided in datasheet.

stress which exceeds the safety factor is present at the gusset-channel transition; stress concentrations such as these render materials susceptible to fatigue cracking. Further detail of the stress magnitude and load paths are shown in Figure 67; symmetric boundary conditions are applied to reduce calculation time. By reviewing the stress distribution and magnitude within the gusset and adjacent members, it is noted that the FoS is reached in the outer half section. This suggests the current structure has approached the design stress limit for the given parameters. Yield limit values for the multi pass TIG sample are used in the analysis.

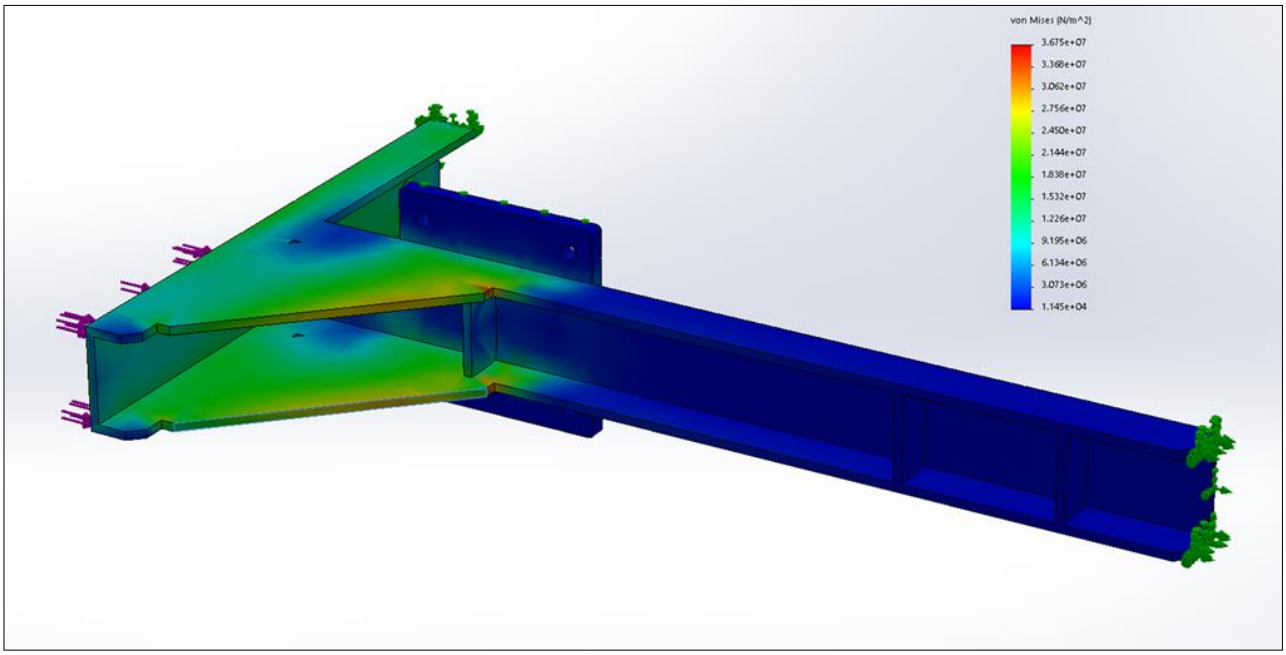

Figure 66 - Current design stress analysis

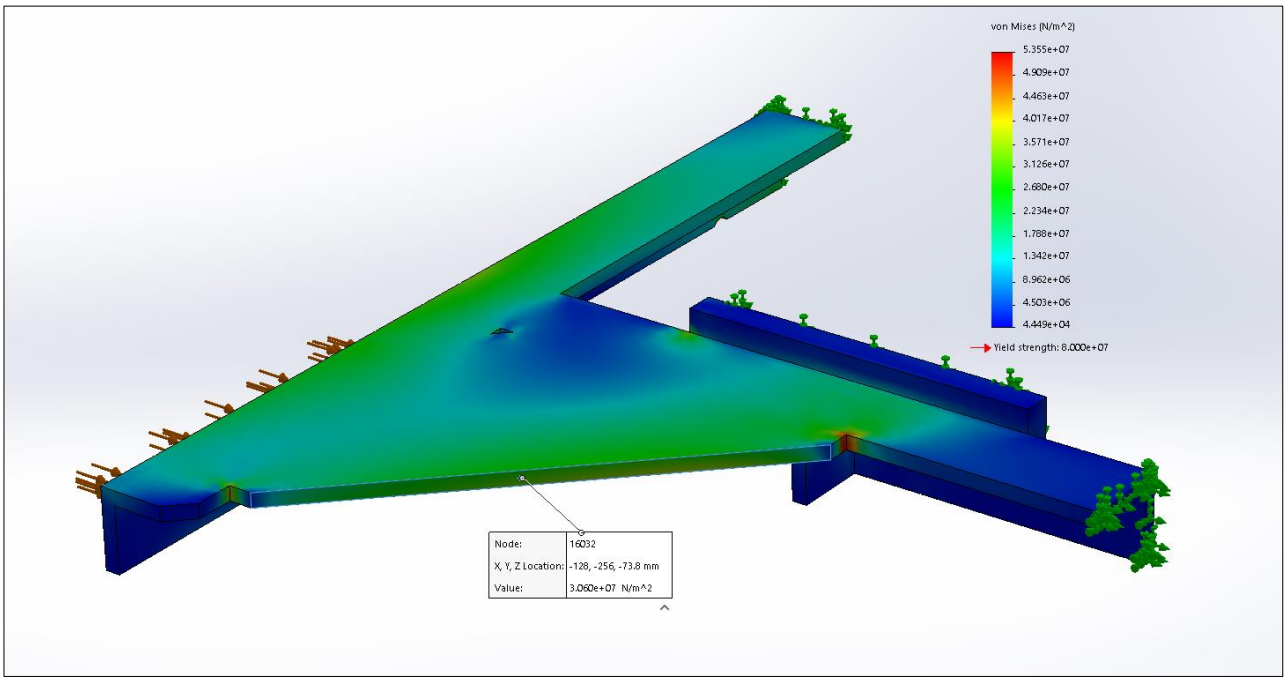

Figure 67 - Isolated symmetry model

A topology optimisation with an objective of mass reduction while maintaining the FoS is shown in Figure 68. The iterative process of applying stress and removing mass until convergence is reached at the defined goals identifies a small volume at the centre of the gusset that would be acceptable to remove. Through observing a topology informed design review it would be possible to include a small slot or hole in the centre of the gusset in order to reduce overall mass. However, the practicality of this is debatable as a 20mm diameter hole renders the outer stress to exceed the FoS and the reduced mass of a smaller hole would be negligible in this case, Figure 69.

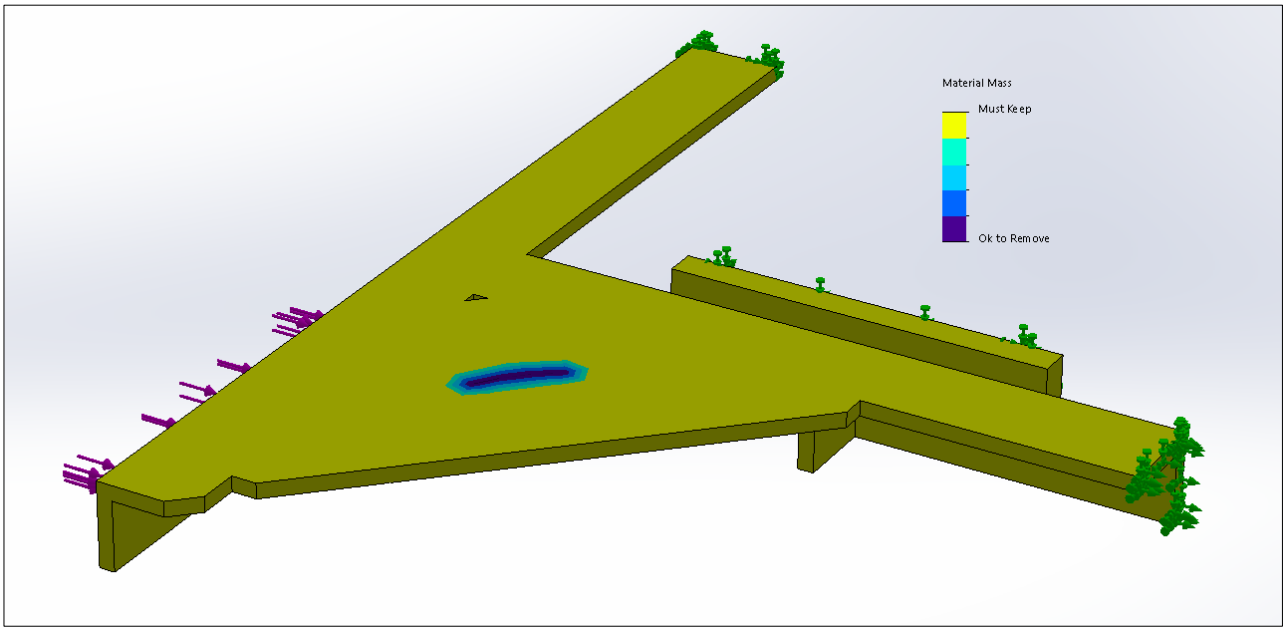

Figure 68 - TIG Topology

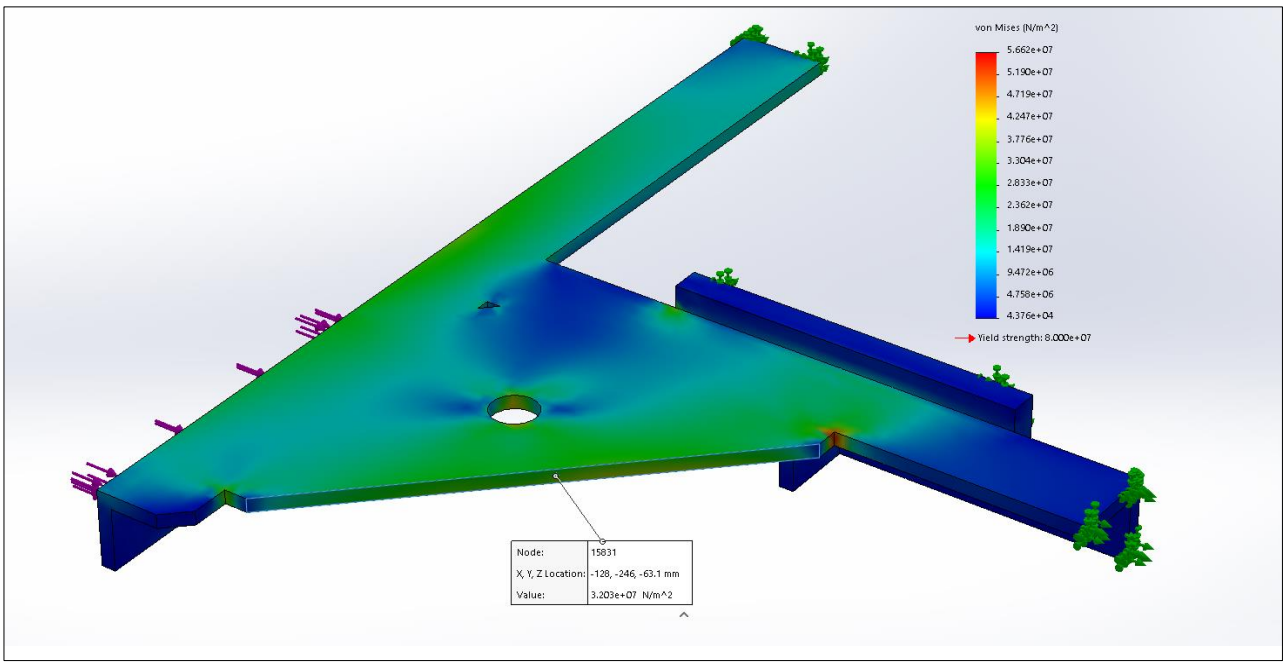

Figure 69 - Stress analysis including 20mm hole

5.1.4 Heat Affected Zone

The availability of optimisation is limited in the TIG weld scenario due to significant material weakening by heating; FSW requiring less heat input results in a lesser weakened material. The specific rate at which heat is input in order to successfully fuse material is calculated as follows for the conventional and FSW processes: (Kumar, et al., 2014).

TIG heat input:

$$Q = \frac{V \times I \times \eta \times 60}{s \times 1000}$$

FSW heat input:

$$Q = \frac{2\pi}{3s} \times \mu \times p \times \omega \times R_S \times \eta$$

Where:

$Q = Heat\ Input\ (kJ/mm)$

$V = Potential\ difference\ (Volts)$

$I = Current\ (Amperes)$

$\eta = Welding\ efficiency\ (\%)$

$s = Welding\ traverse\ speed\ (\ mm/min)$

$\mu = Coefficient\ of\ friction$

$p = Tool\ shoulder\ force\ (\ kN)$

$\omega = Tool\ rotational\ speed\ (rpm)$

$R_S = Tool\ shoulder\ radius\ (m)$

The specific TIG process heat input:

$$2.1\ kJ/mm = \frac{20 \times 240 \times 0.55 \times 60}{75 \times 1000}$$

Where:

- Multi pass TIG parameters attained from Table 13.
- Multi pass TIG welding efficiency:

$$\eta = \frac{Sample\ MT\ UTS\ (MPa)}{Base\ Sample\ UTS\ (MPa)}$$

Specifically:

$$55\% = \frac{175}{317}$$

<u>The specific FSW process heat input:</u>

$$0.85\ kJ/mm = \frac{2\pi}{3 \times 116} \times 1.4 \times 10.7 \times 450 \times 0.01 \times 0.7$$

Where:

- FSW parameters attained from Table 12.
- Coefficient of friction of tool pin and material surface, 1.4 (Kumar, et al., 2009).
- FSW welding efficiency:

$$\eta = \frac{Sample\ 5J\ UTS\ (MPa)}{Base\ Sample\ UTS\ (MPa)}$$

Specifically:

$$70\% = \frac{222}{317}$$

- The tool shoulder force was established by simulating the displacement of the 20mm diameter tool pin into base material by 5microns: this being the elastic value observed when loading and unloading the plunge, Figure 70.

- Stress experienced by displacing 5microns, 34.16MPa; this value correlates with the measured values obtained by Kumar, et al. (2009) when investigating similar alloy and welding parameters.

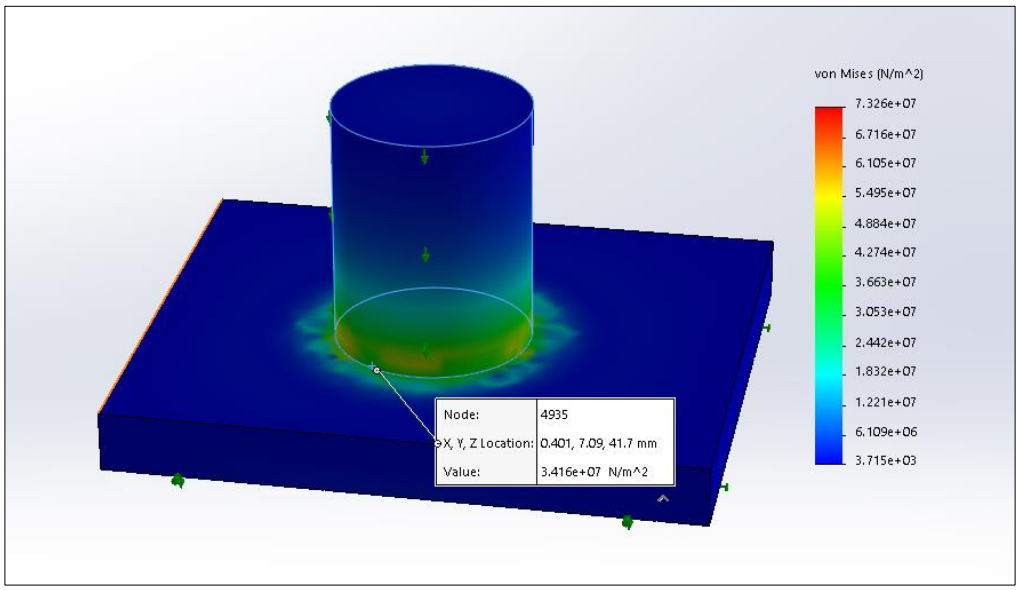

Figure 70 - Tool shoulder force simulation

Calculating tool shoulder force:

$$p = \sigma \div \frac{1}{\left(\frac{\pi D^2}{4}\right)}$$

Specifically:

$$10.7kN = 34.16 \times 10^6 \div \frac{1}{\left(\frac{\pi \times 0.020^2}{4}\right)}$$

The weld path dimensions between the corner gusset and framework are shown in Figure 71. For the purpose of a direct comparison, the likely temperatures encountered during welding are calculated:

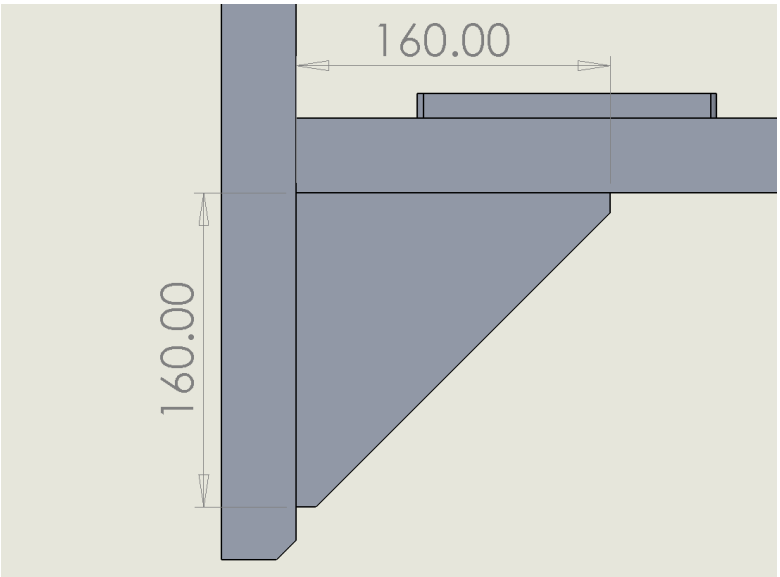

Figure 71 - Weld geometry

Calculating temperature rise during welding with specific heat formula:

$$\Delta T = \frac{Q}{c \times M}$$

Where:

$c = Specific\ heat\ capacity\ (J/kgK)$

$M = Mass\ affected\ by\ heat\ (kg)$

$\Delta T = Change\ of\ temperature\ (K)$

$\mathrm{Q} = Energy\ (J)$

Specific heat capacity of 6082 aluminium alloy, 896 J/kgK (Gleich, 2021).

Q is a product of the calculated heat input based upon specific welding parameters:

$$Q = Heat\ input\ (J/mm) \times Total\ weld\ length\ (mm)$$

Specific to TIG welding:

$$672 \times 10^3\ J = 2.1 \times 10^3 \times 320$$

Specific to FSW:

$$272 \times 10^3\ J = 0.85 \times 10^3 \times 320$$

The material directly affected by heating is shown in Figure 71; which has a mass of 0.85kg. The gusset alone has a mass of 0.38kg

TIG temperature rise from ambient:

$$\Delta 882°K = \frac{672 \times 10^3}{896 \times 0.85}$$

FSW temperature rise from ambient[10]:

$$\Delta 357°K = \frac{272 \times 10^3}{896 \times 0.85}$$

[10] Δ357°+20°(Ambient)=377°C which corresponds with observed average tool temperature during FSW.

5.1.5 FSW Optimisation

As a result of the reduced heating, less tempering has taken place during the FSW process; yield values from FSW sample 5J are used in the analysis. Due to the material being able to resist a greater amount of stress per unit volume; the potential for material reduction is significantly increased. The revised mass removal volume is shown in Figure 72. The topology informed gusset design review shown in Figure 73 is the maximum available reduction in material from the utilisation of FSW at the given parameters. The stress present within the outermost section of the gusset is on the 30MPa limit. A 63% reduction in material volume is achieved which equates to 0.24kg; considering there are four gussets on the overall structure, a 0.96kg mass saving through altering the weld process and plate geometry is exceptional.

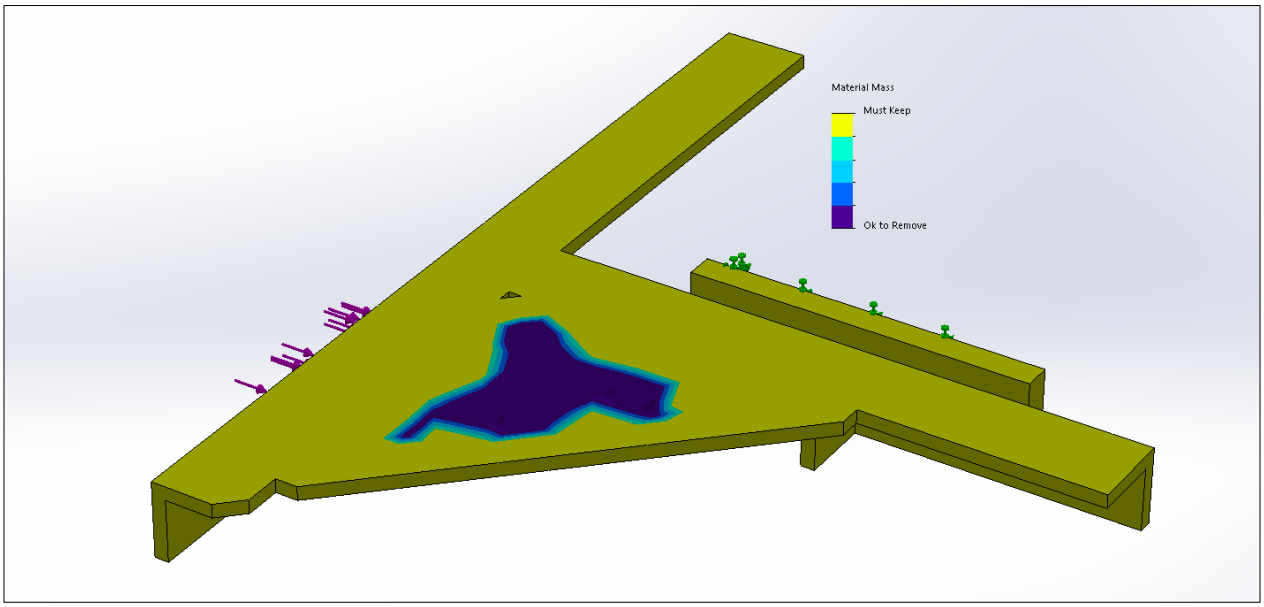

Figure 72 - FSW Topology

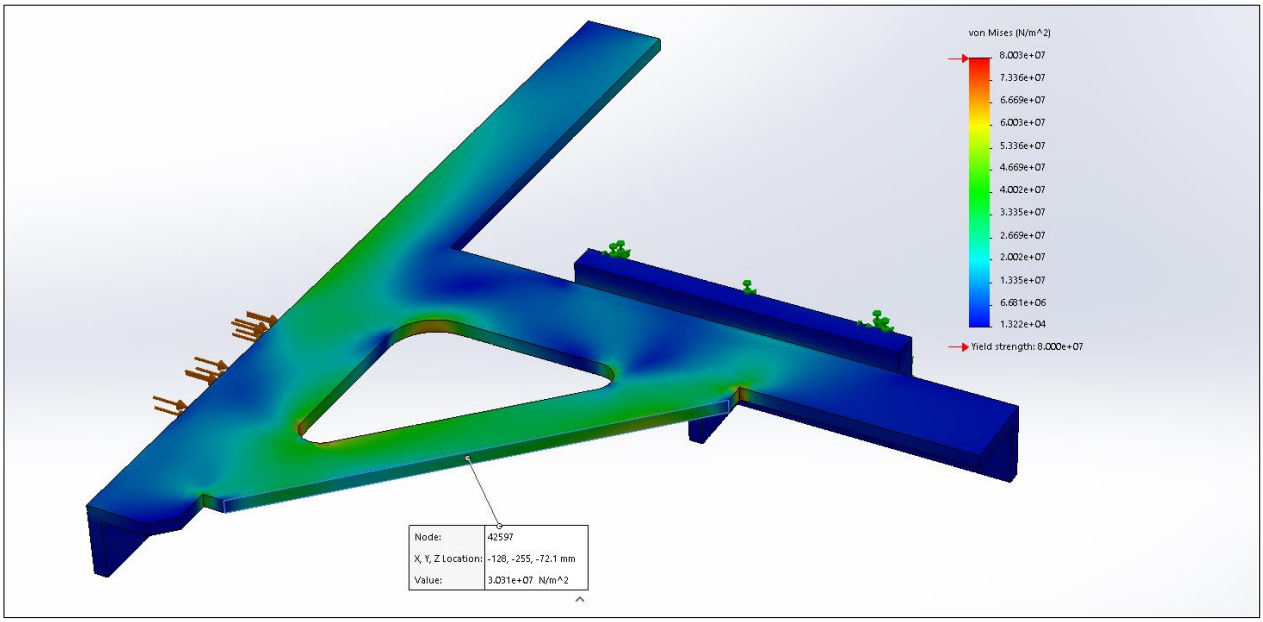

Figure 73 - Topology informed design stress analysis

5.2 Costing

A full size plate of aluminium alloy 6082 T6 is valued at £416, which equates to £133/m² (Aluminium Warehouse, 2021). Accounting for the plate and gusset dimensions, a 156-part batch would be available from a single plate, shown in Figure 74.

The amount of material used by the original gusset and the redesigned gusset are effectively the same as both are made from the same sized original stock; there would be the possibility of utilising the removed centre blank on another production run as is common practice. The optimised geometry blank is shown in Figure 75. The processing and welding costs relating to a full batch are summarised in Table 15.

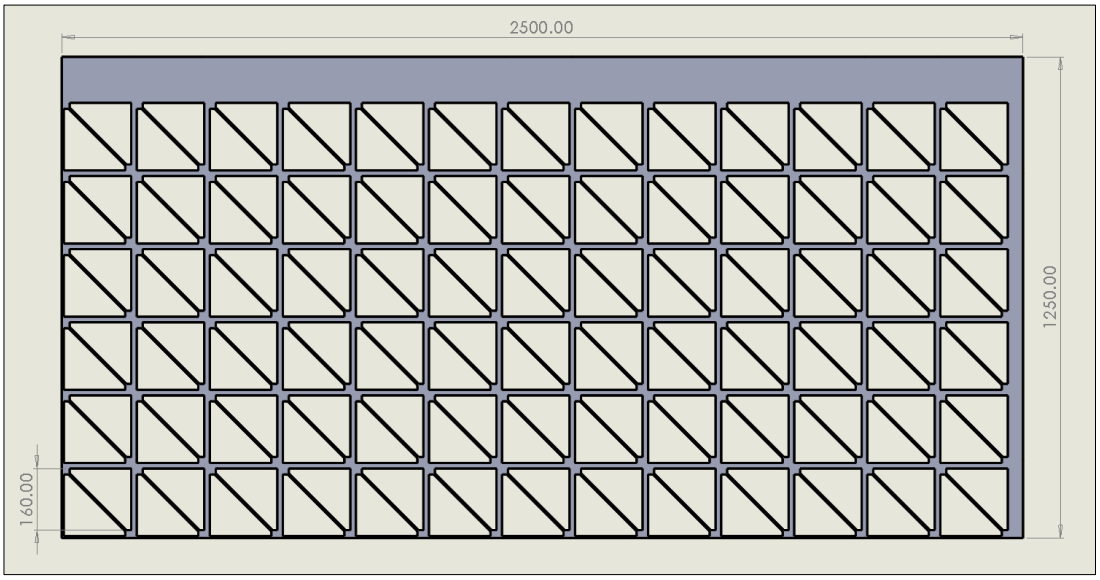

Figure 74 - Plate nested view

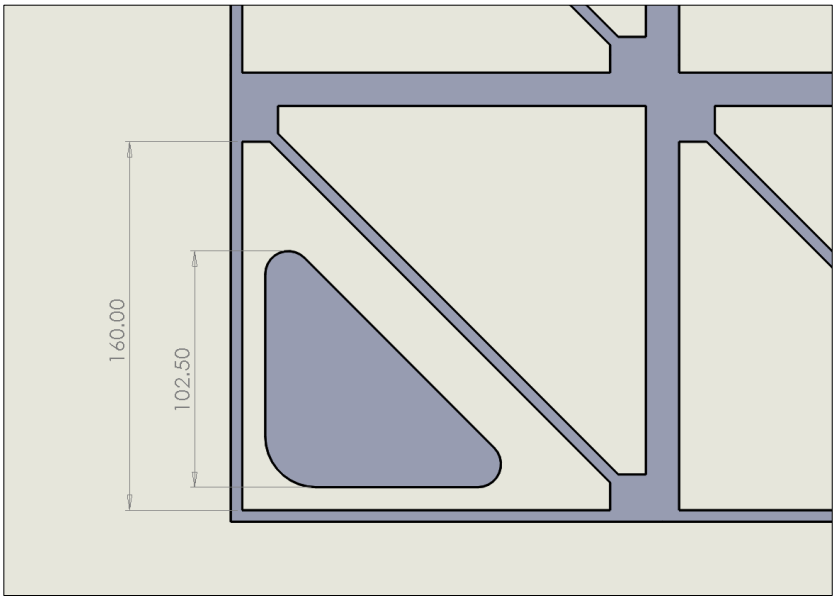

Figure 75 - Optimised blank

<u>Blanking the central region of the optimised gusset with waterjet:</u>

340mm cut perimeter,

550mm/min cut speed,

£65/hour cut cost,

Minutes to cut 156 parts:

$$96.436\,min = \frac{340}{550} \times 156$$

Cost:

$$£104.47 = \frac{96.436}{60} \times 65$$

<u>Blanking the main gusset with waterjet:</u>

553mm cut perimeter,

$$£169.92 = \frac{\frac{553}{550} \times 156}{60} \times 65$$

<u>Edge machining on both sides to 60° included angle in preparation for multi pass TIG welding:</u>

4 x 160mm chamfers required on each part,

3 passes with chamfer bit required to achieve depth,

480mm/min cutting speed,

1-minute setting time before each chamfer,

1-minute handling time between each part,

£50/hour machining cost,

Cost to prepare 156 parts:

$$£823.30 = \frac{\left(\frac{160 \times 4}{480} + (1 \times 4) + 1\right) \times 156}{60} \times 50$$

<u>Setting and clamping of gusset into fabricated sub-assembly:</u>

2 minutes setting time each part,

£32/hour fitting cost,

Cost of setting 156 parts:

$$£166.40 = \frac{2 \times 156}{60} \times 32$$

<u>Welding gusset in position with TIG process:</u>

500mm/min filler wire feed rate,

4 x 160mm half penetration joints required on each part,

3 x passes required on each joint,

£0.12 per Ø3.2mm, 0.5m long aluminium filler wire,

75mm/min welding traverse speed,

£38/hour welding cost (including shielding gas),

Minutes to weld 156 parts in place:

$$3993.6\ min = \frac{(160 \times 4) \times 3}{75} \times 156$$

Welding cost:

$$£2529.28 = \frac{3993.6}{60} \times 38$$

Additional filler material cost:

$$£239.62 = \frac{(3993.6 \times 500)}{1000} \times 0.12$$

Welding gusset in position with FSW process:

116mm/min welding traverse speed,

2 x 160mm full penetration joints required on each part,

1 x pass required on each joint,

2mm/min plunge rate,

6mm tool plunge depth,

120mm/min tool retraction,

2-minute tool and work piece setting,

£50/hour machining cost,

Plunge time each part:

$$3\ min = \frac{6}{2}$$

Welding time each part:

$$4.76\ min = \left(\frac{160\ \times 2}{116}\right) + 2$$

Tool retraction each part:

$$0.05\ min = \frac{6}{120}$$

Minutes to weld 156 parts in place with FSW:

$$1218.36\ min = (3 + 4.76 + 0.05) \times 156$$

Welding cost:

$$£1015.30 = \frac{1218.36}{60} \times 50$$

Weld inspection:

4-minutes visual and liquid penetrant per weld,

2-minutes to produce report and issue certification per weld,

£32/hour NDT

Cost to inspect all welds:

$$£832 = \frac{(4 + 6) \times 156}{60} \times 32$$

Table 15 - Processing & welding cost comparison

Operation/Cost	**Original Gusset**		**Re-design Gusset**	
	Detail	**Cost**	**Detail**	**Cost**
Material cost	Common	£416	Common	£416
Blanking central region	N/A	-	Additional	£104.47
Blanking main gusset	Common	£169.92	Common	£169.92
Edge preparation	Only required for TIG	£823.30	N/A	-
Setting & clamping	Common	£166.40	Common	£166.40
TIG welding	Multi pass, both sides	£2529.28	N/A	-
TIG filler material	3.2mm 4043A wire	£239.62	N/A	-
FSW	N/A	-	Single pass, one side	£1015.30
Weld inspection	Common	£832	Common	£832
Total Cost		£5176.52		£2704.09

The cost effectiveness of utilising FSW over conventional methods has been proven; the original processing and welding costs associated with a 156-part batch have been reduced by £2472.43, which is 47.8%.

In terms of per structure figures:

- Original design, 4 gussets, 48 TIG weld passes in total, £132.73
- Re-design, 4 gussets, 8 FSW passes in total, £69.34

In terms of per component figures:

- Original design, single gusset, 12 TIG weld passes in total, £33.18
- Re-design, single gusset, 2 FSW passes in total, £17.34

6. Conclusion

6.1 Discussion and Concluding Remarks

This engineering project has successfully developed a solution to a continually increasing problem at a company facility; a reduction in resources has indirectly increased the workload per resource, which in turn over-demands the conventional welding process capacity. The project has improved upon the longstanding methods for welding structural aluminium members through the application of FSW; now expanding the overall welding capacity to better address the demand. The FSW project has been noted as innovative by senior members of the QinetiQ engineering community as this is the first time FSW has been applied within the company. By contrast, it had been over a decade since any developments in welding capability had been made; the replacement of MMA welding for heavy mild steel structures with a FCAW process which was new at the time. The aim of the project was to assess the feasibility of utilising a FSW process for the purpose of increasing efficiencies; the adaption of current processes has enabled this and by way of a structural manufacture example, a 47.8% reduction in cost has been calculated.

The effect of varying combinations of welding process parameters on the mechanical characteristics of aluminium alloy 6082-T6 have been investigated. FSW trials were conducted with existing equipment that had been modified, followed by the production of test samples. It was identified through material testing that an ultimate tensile strength of 222MPa and a usable yield strength of 120MPa was attainable with a welding traverse rate of 116mm/min and a tool rotation speed of 450rpm. The FSW process delivered a 70% joint efficiency which is a sizeable improvement on the 55% joint efficiency of conventional TIG welding methods. The sample which these tensile values are attributed to also retained 66% of its original hardness in the welded zone, by contrast the conventional TIG method had only retained 54% of its original hardness. It is established that hardness retention correlates with higher tensile strength; heat from the welding process initiates grain growth, softening the material.

The higher quality FSW were produced in the 86-116mm/m and 450-560rpm range, quality being defined as a combination of characteristics; UTS- double that of conventional methods, yield strength- approximately half that of the UTS and a level weld surface that is free of defects. The quality decreases rapidly upon raising the tool rotation speeds; the 710-900rpm produced poor quality at 86mm/min, an improvement was observed when 116mm/min was applied. This suggests the presence of a linear relationship between the parameters within the studied range; it is proposed that 900rpm would deliver higher quality when coupled with 149mm/min or higher. The limiting factor of the investigation was that the 149mm/min traverse rate would result in tool pin failure due to excessive shear force acting on the tool material.

A ratio of 4.8 to 6 is present between the tool rotation speed and the traverse rate in this study. Three recent investigations are seen to use much higher ratios to attain the desired UTS values; 48-66 (Raj, et al., 2021),

15-29 (Kumar & Chander, 2020) and 106-130 (Ramana, et al., 2021). When contrasting these studies, it is clear to see that when a combination of rotation speeds above 1000rpm are coupled with slow traverse rates (in line with ratios) the weld surface quality deteriorates significantly. For these parameters, a maximum joint efficiency of 66% was achieved; this is based on the 42 weld results within the three studies. Utilising high rotation speeds are of detriment to the welding process as the traverse rates required must either be so high that the tool pin fails, or so low that the process becomes overly time consuming and produces poor surface finish. A 70% joint efficiency and a high surface finish is achieved with the parameters of this investigation. Optimum FSW parameters have been discovered for the production of high quality welds in 6082; similarly, a range of parameters that produce poor quality welds have also been revealed.

The advantage of FSW in terms of improved values for tensile strength and hardness are accepted and correlate to similar studies, albeit the actual welding methods may vary (Dwivedi, et al., 2020) (Gaikwad & Chinchanikar, 2021). Stress analysis and structural topology optimisation methods have been able to practically quantify these advantages. The existing design was validated with the multi pass TIG welding sample values; revealing the working stresses experienced by the corner gusset to be at the factor of safety limit, 30MPa. This initial model confirms that the correct, traditional design process would have been followed; the gusset geometry was tied to the maximum allowable stress, set by the FoS. An initial topology study revealed there was no considerable material optimisation available within the gusset; interestingly, this was found to be the direct consequence of material strength reduction due to welding heat exposure rather than actual material limits being reached. Meaning, FSW being a process that generates less heat; some strength could be retained by the material and optimisation was allowed. After accounting for the increased strength, a 63% reduction in material volume was achieved under the exact same objectives, variables and constraints. This equates to a 0.24kg reduction per component; production costs are evaluated for both the original design and the redesign, per component costs are £33.18 and £17.34 respectively. A design confidence of 75% is proposed for the accuracy of the redesigned gusset; which is in line with the conclusions of similar optimisation studies, the confidence cannot realistically be improved until validation with a manufactured assembly occurs (Tsavdaridis, et al., 2019) (Kumar, et al., 2021). Running the FSW process alongside current processes allow cost savings through reduced welding fume control measures, reduced shielding gas and energy consumption.

6.2 Project Success

The work undertaken for this project has addressed the four main project objectives:

- A range of published literature was reviewed initially to inform the research method and direction; several further sources of information have been reviewed throughout the project in order to overcome specific issues, building upon the research of others.
- A FSW procedure that conforms to BS EN ISO 25239:2020 has been developed within the range of capability available at the engineering facility.
- Justification for practical application of the developed procedure has been completed through expressing the cost saving benefit, compared with current cost.
- The research findings are presented throughout and all key figures are discussed, improvements and recommendations are also provided.

Project success ought to be gauged against how the results and concerns of the strategic analyses were addressed throughout, with reference to Table 4:

- Best use of new technology has been made which has resulted in improved mechanical outputs, greater design flexibility in meeting customer needs and a higher value end product that is cost effective.
- First time use of new technology has been recognised and appreciated by the company.
- Potential detrimental factors arose and were managed at the right time in order to ensure minimal impact to the project: restrictions on access to equipment due to the COVID-19 outbreak coupled with employment change mandated a significant step-up in resource allocation for the practical element of the project. In line with the project planning document: work scheduled to begin 19/10/20 was originally planned to complete by 18/12/20, was amended and complete by 18/11/20.

6.3 Improvements

Critical appraisal of the research undertaken is vitally important for building recommendations, improvements and for carrying out further work:

- The initiation of the project is specific in terms of researching a more efficient welding method, but overly broad in mapping out how FSW technique would be developed; more specific literature should have been reviewed at the outset, of the type that is reviewed during the analysis phase.
- The requirement for third party involvement was greatly underestimated during the planning phase; the roles and responsibilities list as shown has developed throughout the project as the need for specific assistance with various technical elements was overlooked. Accounting for this would have resulted in the streamlining of many tasks as the dialogue between key individuals would have already initiated, allowing all involved to better manage project expectations.
- The presented material characteristic data for each weld type was obtained by testing samples that were taken from single weld specimens; to improve reliability and credibility of the data, samples ought to have been taken from a minimum of three of the same weld type specimens.
- The number of hardness readings taken per sample has provided sufficient detail to recognise the tempering mechanisms at work during welding. Time constraints did not allow for enough data to be collected in order to develop a high resolution curve; increasing the number of readings would provide a much clearer and accurate representation.
- The microscopy carried out, crudely identified phase transition areas; much work is required for developing a more suitable reagent for the material type. Hydrofluoric acid is a key component in etching aluminium magnesium silicon alloys; this was not accessible due to the timescale and current restrictions.
- The FEA results were all generated by one solver type within Solidworks and with the use of one type of mesh of relatively coarse density in the interest of quicker results. Ideally, several mesh types, finer meshing and the trialling of additional solvers would be carried out and compared with confirmed validated data to assure optimisation decisions.

6.4 Recommendations

As a response to the findings of this research, the following recommendations are made for continuation:

The short term recommendations are to revisit areas of the project where improvement guidance has been made with the overall view of improving the confidence percentage of the stress analysis and optimisation models. The next step will be to communicate the updated findings with design teams and production staff in order to explain the potential benefits of the new process and to achieve project buy-in. A plan of action to replace an amount of conventional welds with FSW is to be set out and sufficient time must be allowed for any encountered issues to be addressed. A demonstration and training session on the new process is to be held.

The medium term recommendations are to make use of the FSW process in a structural aluminium framework production run. Technical drawings will need to be updated to include all relevant welding process information and details of newly optimised parts. For assurance purposes, a mechanical inspection method will need to be devised in line with current standards and incorporated in current quality assurance methods. Destructive proof load testing of the initial structure will be required to verify the FEA based stress and deflection predictions; the structure in question will have been exposed to stresses above the FoS and will be scrapped as a result. It will be of critical importance to record all traceability information accurately; all measureable process parameters should be recorded including tool wear and initial material condition. An energy consumption study is to compare identical tasks carried out with FSW and conventional methods. Once the process is established and operating smoothly, a technical report should be produced to capture what has been achieved and any issues which have been overcome.

The long term recommendations are to continually review mechanical designs and replace conventional welding processes so far as reasonably practicable. It is recognised that several joint types would not be possible to weld with FSW therefore it would be suitable for designs to be modified in order to allow FSW at every opportunity. The process must be continually evaluated as any innovative developments in process or tooling may render it feasible to weld other materials, such as steel. When the FSW process is fully developed it should be rolled-out to all company design and production facilities so the advantages to be appreciated on a wider scale.

References

3M, 2021. *3M™ Speedglas™ Welding Helmet 9100.* [Online]
Available at: https://www.3m.co.uk/3M/en_GB/company-uk/3m-products/~/3M-Speedglas-Welding-Helmet-9100-FX-Air-with-filter-9100XXi-and-3M-Adflo-Powered-Air-Respirator-547726/?N=5002385+3292307646&rt=rud
[Accessed 16 January 2021].

Aalco, 2017. *Aalco Standard Stock Range - Issue 17.* [Online]
Available at: https://www.aalco.co.uk/literature/files/aalco-stocklist.pdf
[Accessed 6 January 2021].

Aalco, 2019. *Aluminium Alloy 6082.* [Online]
Available at: https://www.aalco.co.uk/datasheets/Aluminium-Alloy_6082-T6~T651_148.ashx
[Accessed 4 January 2021].

Aalco, 2020. *Introduction to Aluminium and its alloys.* [Online]
Available at: https://www.aalco.co.uk/datasheets/Aluminium-Alloy-Introduction-to-Aluminium-and-its-alloys_9.ashx
[Accessed 10 October 2020].

Ajax Machine Tools International Ltd, 2021. *Univeral Milling Machines.* [Online]
Available at: https://www.ajax-mach.co.uk/milling-machines/milling-machines-horizontal/
[Accessed 7 January 2021].

Al- Roubaiy, A. O., Nabat, S. M. & Batako, A. D., 2019. *An Investigation into Friction Stir Welding of Aluminium Alloy.* s.l., 2nd International Conference on Materials Manufacturing and Modelling.

AlcoTech, 2015. *How and why alloying elements are added to aluminum.* [Online]
Available at: http://www.alcotec.com/us/en/education/knowledge/qa/How-and-why-alloying-elements-are-added-to-aluminum.cfm#
[Accessed 5 January 2021].

Aluminium Warehouse, 2021. *2500 mm x 1250 mm x 6.0 mm - 6082T6 - Aluminium Sheet.* [Online]
Available at: https://www.aluminiumwarehouse.co.uk/2500-mm-x-1250-mm-x-6-0-mm-6082t6-aluminium-sheet
[Accessed 20 March 2021].

ASQ, 2019. *HOW TO BUILD A HOUSE OF QUALITY WITH TECHNICAL AND COMPETITIVE BENCHMARKING.* [Online]
Available at: https://asq.org/quality-resources/house-of-quality
[Accessed 19 February 2019].

Balachandar, K., Jegadeeshwaran, R. & Gandhikumar, D., 2020. Condition monitoring of FSW tool using vibration analysis – A machine learning approach. *materials today,* 27(3), pp. 2970-2974.

Banik, A. et al., 2020. *Determination of best tool geometry for friction stir welding of AA 6061-T6 using hybrid PCA-TOPSIS optimization method.* India, NIT Agartala.

Bhushan, R. & Sharma, D., 2020. Investigation of mechanical properties and surface roughness of friction stir welded AA6061-T651. *International Journal of Mechanical and Materials Engineering,* Volume 15.

BINZEL, 2021. *MIG/MAG Fume Extraction Torch RAB GRIP.* [Online]
Available at: https://www.binzel-abicor.com/UK/eng/products/manual/migmag-torches/fume-extraction-torch-rab-grip/
[Accessed 16 January 2021].

BOC, 2021. *Welding Gas.* [Online]
Available at: https://www.boconline.co.uk/shop/en/uk/gas/welding-gas
[Accessed 15 January 2021].

Boeing, 2004. *Friction-stir welding: Joining questions, answers.* [Online]
Available at: https://www.boeing.com/news/frontiers/archive/2004/november/i_letters.html
[Accessed 2 October 2020].

BSI, 1970. *Specification for high carbon bright steel (silver steel).* [Online]
Available at: https://shop.bsigroup.com/ProductDetail?pid=000000000000031482
[Accessed 7 October 2020].

BSI, 2007. *BS EN 1999-1-1:2007+A2:2013, Eurocode 9: Design of aluminium structures, General structural rules.* [Online]
Available at: https://shop.bsigroup.com/ProductDetail?pid=000000000030298529
[Accessed 20 February 2021].

BSI, 2016. *Aluminium and aluminium alloys. Sheet, strip and plate. Mechanical properties.* [Online]
Available at: https://shop.bsigroup.com/ProductDetail/?pid=000000000030366788
[Accessed 5 January 2021].

BSI, 2018. *BS EN ISO 6507-1:2018 Metallic materials. Vickers hardness test. Test method.* [Online]
Available at: https://shop.bsigroup.com/ProductDetail/?pid=000000000030290356
[Accessed 6 January 2021].

BSI, 2019a. *Aluminium and aluminium alloys. Chemical composition and form of wrought products. Chemical composition and form of products.* [Online]
Available at: https://shop.bsigroup.com/ProductDetail/?pid=000000000030381004
[Accessed 5 January 2021].

BSI, 2019b. *BS EN ISO 6892-1:2019 Metallic materials tensile testing.* [Online]
Available at: https://shop.bsigroup.com/ProductDetail/?pid=000000000030268532
[Accessed 1 February 2021].

BSI, 2020a. *Welding.* [Online]
Available at: https://www.bsigroup.com/en-GB/industries-and-sectors/Welding/
[Accessed 1 September 2020].

BSI, 2020b. *BS EN ISO 25239 - Friction stir welding. Aluminium.* [Online]
Available at: https://landingpage.bsigroup.com/LandingPage/Series?UPI=BS%20EN%20ISO%2025239
[Accessed 1 October 2020].

Cambridge Network, 2017. *Friction stir welding – joining the future of industry.* [Online]
Available at: https://www.cambridgenetwork.co.uk/news/friction-stir-welding-joining-the-future-of-industry
[Accessed 2 October 2020].

Casey, J. J., 2009. The Beauty of 5 Why Problem Solving. *Automotive Excellence,* p. 3.

ClassNK, 2010. *Guidelines on Friction Stir Welding.* [Online]
Available at: https://www.safety4sea.com/wp-content/uploads/2014/09/pdf/2011.01.28_ClassNK_Guidelines.pdf
[Accessed 5 September 2020].

Clean Sky Oasis, 2020. *ABOUT THE PROJECT.* [Online]
Available at: http://www.cleansky-oasis.eu/about/
[Accessed 5 October 2020].

CORDIS, 2019. *Friction stir welding UNiversal HEAD.* [Online]
Available at: https://cordis.europa.eu/project/id/831833
[Accessed 5 October 2020].

Costa, J. et al., 2014. Fatigue life improvement of mig welded aluminium T-joints by friction stir processing. *International Journal of Fatigue,* Volume 61, p. 244–254.

Donato, J., 2020. *Design Products for Sustainability.* [Online]
Available at: https://bpf.co.uk/Sustainable_Manufacturing/Design/Designing_Sustainability.aspx
[Accessed 5 February 2020].

Dwivedi, U., Tiwari, S., Mishra, A. & Das, S., 2020. Comparative Study of Weld Characteristics of Friction Stir Welded Joints on Aluminium 7075 with Autogenous TIG. *Materials Today,* 22(4), p. 2532–2538.

Eff, M., 2012. *The Effects of Tool Texture on Tool Wear in Friction Stir Welding of X-70 Steel,* Ohio: The Ohio State University.

Erasmus+, 2017. *Friction Stir Welding,* European Union: Erasmus+ Programme.

ESAB, 2020a. *Friction Stir Welding.* [Online]
Available at: https://assets.esab.com/asset-bank/assetfile/12296.pdf
[Accessed 6 October 2020].

ESAB, 2020a. *What is friction stir welding of aluminum?.* [Online]
Available at: https://www.esabna.com/us/en/education/blog/what-is-friction-stir-welding-of-aluminum.cfm
[Accessed 5 October 2020].

ESAB, 2020b. *Investigation of Nondestructive Testing Methods for Friction Stir Welding.* [Online]
Available at: https://www.esabna.com/us/en/news/latest/done-in-60-seconds-rocket-fuel-tank-built-with-friction-stir-welding.cfm
[Accessed 5 October 2020].

ESAB, 2021. *AristoMIG.* [Online]
Available at: https://www.esab.co.uk/gb/en/products/arc-welding-equipment/advanced-synergic-multi-process-equipment/aristo-mig-u4000i.cfm
[Accessed 15 January 2021].

FPT, 2020. *FSW BENEFITS.* [Online]
Available at: https://frictionstirwelding.it/en/benefit
[Accessed 5 October 2020].

Gaikwad, V. & Chinchanikar, S., 2021. *Investigation on surface roughness, ultimate tensile strength, and microhardness of friction stir welded AA7075-T651 joint.* Maharashtra State, Department of Mechanical Engineering, Vishwakarma Institute of Information Technology.

Gleich, 2021. *EN AW 6082 Technical Data.* [Online]
Available at: https://gleich.de/files/en_aw_6082.en.pdf
[Accessed 1 March 2021].

Grenzebach, 2020. *Friction Stir Welding Equipment and Technology portfolio.* [Online]
Available at:
https://www.grenzebach.com/fileadmin/Content/Market_and_Product/Friction_Stir_Welding/Files/Grenzebach_Friction_Stir_Welding_EN.pdf
[Accessed 4 October 2020].

Haryadi, G., Dewa, R. & Ekaputra, I., 2018. FATIGUE CRACK GROWTH AND PROBABILITY ASSESSMENT FOR. *JOURNAL OF THEORETICAL,* pp. 179-190.

Hattingh, D. G., Blingnault, C., van Niekerk, D. I. & James, M. N., 2008. Characterization of the influences of FSW tool geometry on welding forces and weld tensile strength using an instrumented tool. *Journal of Materials Processing Technology,* 203(1-3), pp. 46-57.

Hessing, T., 2013. *Quality Function Deployment (QFD) and House of Quality (HOQ).* [Online]
Available at: https://sixsigmastudyguide.com/house-of-quality-hoq/
[Accessed 18 February 2019].

Hossein, T. et al., 2019. Investigation of Nondestructive Testing Methods for Friction Stir Welding. *Metals,* 9(6), p. 624.

HSE, 1993. *Ozone and fume arising from welding on aluminium.* [Online]
Available at: https://www.hse.gov.uk/foi/internalops/ocs/600-699/oc668_17.htm
[Accessed 5 September 2020].

HSE, 2020. *Managing risks and risk assessment at work.* [Online]
Available at: https://www.hse.gov.uk/simple-health-safety/risk/risk-assessment-template-and-examples.htm
[Accessed 7 October 2020].

Humberto Mota de Siqueira, R. et al., 2016. Comparing mechanical behaviour of aluminium welds produced by laser beam welding (LBW), friction stir welding (FSW), and riveting for aeronautical structures. *Welding International,* 30(7), pp. 497-503.

IIBA, 2009. *A Guide to the Business Analyst's Body of Knowledge® (BABOK® Guide).* 4th ed. Toronto: International Institute of Business Analysis.

Jacquin, D. & Guillemot, G., 2019. A review of microstructural changes occurring during FSW in aluminium alloys and their modelling. *Journal of Materials Processing Technology,* 288(2019).

Jahan, A., Edwards, K. L. & Bahraminasab, M., 2016. 2 - Materials selection in the context of design problem-solving. In: *Multi-criteria Decision Analysis for Supporting the Selection of Engineering Materials in Product Design.* Oxford: Butterworth-Heinemann, pp. 25-40.

Jones, G. L., 2020. *Failures in aluminium MIG and TIG welding* [Interview] (2 October 2020).

Jones, G. L., 2020. *History of Bldg.100* [Interview] (18 November 2020).

Juran, 2018. *Guide to Failure Mode and Effect Analysis – FMEA.* [Online]
Available at: https://www.juran.com/blog/guide-to-failure-mode-and-effect-analysis-fmea/
[Accessed 7 September 2020].

Kennard, K. F., 2015. *A Simple Method for Evaluating Wear in Different,* BYU: Brigham Young University.

Krasnowski, K., Hamilton, C. & Dymek, S., 2015. Influence of the tool shape and weld configuration on microstructure and mechanical properties of the Al 6082 alloy FSW joints. *Civil and mechanical Engineeing,* 15(1), pp. 133-141.

Kumar, A., Gautam, S. & Kumar, A., 2014. HEAT INPUT & JOINT EFFICIENCY OF THREE WELDING PROCESSES TIG, MIG AND FSW USING AA6061. *International Journal of Mechanical Engineering and Robotics Research,* 1(1), pp. 89-95.

Kumar, K., Kalyan, C., Kailas, S. & Srivatsan, T., 2009. An Investigation of Friction During Friction Stir Welding of Metallic Materials. *Materials and Manufacturing Processes,* 24(4), pp. 438-445.

Kumar, R., Dhami, S. & Mishra, R., 2021. *Optimization of friction stir welding process parameters during joining of aluminum alloys of AA6061 and AA6082.* Chandigarh, Department of Mechanical Engineering, National Institute of Technical Teachers Training & Research.

Kumar, S. & Chander, S., 2020. *Effect of tool pin geometry on FSW dissimilar aluminum alloys - (AA5083 & AA6061).* Telangana, Department of Mechanical Engineering, S R Engineering College.

Landau, P., 2020. *How to Use Microsoft Project – A Quick Guide.* [Online]
Available at: https://www.projectmanager.com/blog/how-to-use-microsoft-project
[Accessed 05 January 2021].

Lincoln Electric, 2021. *PRECISION TIG® 375 TIG WELDER.* [Online]
Available at: https://www.lincolnelectric.com/en-us/Equipment/Pages/product.aspx?product=K2622-1(LincolnElectric)
[Accessed 15 January 2021].

Lincoln, 2020. *TIG Welding Aluminum.* [Online]
Available at: https://www.lincolnelectric.com/en-us/support/welding-how-to/Pages/tig-welding-aluminum-detail.aspx
[Accessed 5 September 2020].

Madhusudan, M. et al., 2020. *Behavioral studies of process parameters and transient numerical analysis on friction stir welded dissimilar alloys.* India, Dayananda Sagar College of Engineering.

Mandal, S., Rice, J. & Elmustafa, A., 2008. Experimental and numerical investigation of the plunge stage in friction stir welding. *Journal of Materials Processing Technology,* 203(1-3), pp. 411-419.

McCombes, S., 2019. *How to write a methodology.* [Online]
Available at: https://www.scribbr.co.uk/thesis-dissertation/methodology/
[Accessed 1 October 2020].

Mercan, E., Ayan, Y. & Kahraman, N., 2020. Investigation on joint properties of AA5754 and AA6013 dissimilar aluminum alloys welded using automatic GMAW. *Engineering Science and Technology, an International Journal,* 23(4), pp. 723-731.

Miller, 2020a. *The Most Common MIG Weld Defects on Aluminum and Steel and How to Avoid Them.* [Online]
Available at: https://www.millerwelds.com/resources/article-library/the-most-common-mig-weld-defects-on-aluminum-and-steel-and-how-to-avoid-them#:~:text=Some%20of%20the%20most%20common%20weld%20defects%20are%20porosity%2C%20lack,more%20welding%20challenges%20than%20ste
[Accessed 5 Septemeber 2020].

Miller, 2020b. *How to Successfully MIG Weld Aluminum.* [Online]
Available at: https://www.millerwelds.com/resources/article-library/gmaw-mig-aluminum-welding-hints
[Accessed 5 September 2020].

Miller, 2020c. *How to Solve 10 Common TIG Welding Problems.* [Online]
Available at: https://www.millerwelds.com/resources/article-library/ten-common-tig-problems-a-visual-guide
[Accessed 6 September 2020].

MindTools, 2020. *SWOT Analysis- How to Develop a Strategy For Success.* [Online]
Available at: https://www.mindtools.com/pages/article/newTMC_05.htm
[Accessed 1 September 2020].

Morris, P. W. G., 2004. *Moving from corporate strategy to project strategy: leadership in project management.* London, Project Management Institute.

Olympus, 2020. *Friction Stir Weld Inspection.* [Online]
Available at: https://www.olympus-ims.com/en/friction-stir-weld-inspection/
[Accessed 5 September 2020].

PACE Technologies, 2021. *Metallographic Aluminum Etchants.* [Online]
Available at: https://www.metallographic.com/Metallographic-Etchants/Metallography-Aluminum-etchants.htm
[Accessed 20 January 2021].

Padmanaban, G. & Balasubramanian, V., 2009. Selection of FSW tool pin profile, shoulder diameter and material for joining AZ31B magnesium alloy – An experimental approach. *Materials & Design,* 30(7), pp. 2647-2656.

Pascoal, A. et al., 2018. *Robotic Welding Tests MIG Standard and CMT+P in Aluminum Alloy 6082-T6 for Optimization of Penetration, Cord Width and Reinforcement.* 18th International Conference on Experimental Mechanics (ICEM18), Brussels, Belgium, University of Porto.

Patent Office, 2020. *GB2306366 - Friction stir welding tool and method.* [Online]
Available at: https://www.ipo.gov.uk/p-ipsum/Case/PublicationNumber/GB2306366
[Accessed 1 October 2020].

Phillips, D. F., 2020. *The potential application of Araldite 2015-1* [Interview] (21 September 2020).

Pombal, T. et al., 2019. Implementation of Lean Methodologies in the Management of Consumable Materials in the Maintenance Workshops of an Industrial Company. *Procedia Manufactring,* Volume 38, pp. 975-982.

Prashanth, I., Manohar, B., Prudhvi Raj, K. & Rohith, P., 2019. Experimental Investigation on TIG Welded Aluminium Alloy-6082 Weldment using Non-Destructive Evaluation. *International Journal of Trend in Scientific Research and Development (IJTSRD),* 3(3), pp. 1047-1050.

QDF Online, 2010. *Template: Traditional House of Quality.* [Online]
Available at: http://www.qfdonline.com/templates/
[Accessed 17 February 2019].

QinetiQ, 2020a. *Annual Report & Accounts 2020,* Hampshire: QinetiQ.

QinetiQ, 2020b. *Internal DES Database, Tool Demand,* Aberporth: QinetiQ.

QinetiQ, 2021a. *Our Company.* [Online]
Available at: https://www.qinetiq.com/en/our-company
[Accessed 1 February 2021].

QinetiQ, 2021b. *Third Quarter Trading Update.* [Online]
Available at: https://www.qinetiq.com/en/investors/results-reports-and-presentations
[Accessed 5 February 2021].

Raj, A., Kumar, J., Rego, A. & Rout, I., 2021. *Optimization of friction stir welding parameters during joining of AA3103 and AA7075 aluminium alloys using Taguchi method.* Karnataka, Department of Mechanical and Automobile Engineering School of Engineering and Technology.

Ramamoorthi, R. et al., 2020. *An investigation of the impact of axial force on friction stir-welded AA5086/AA6063 on microstructure and mechanical properties butt joints.* India, Sri Krishna College of Engineering and Technology.

Ramana, V., Yelamaseti, B. & Vardhan, V., 2021. *Effect of FSW process parameters and tool profile on mechanical properties of AA 5082 and AA 6061 welds.* Hyderabad, Department of Mechanical Engineering, CMR Institute of Technology.

Rawson, K. J. & Tupper, E. C., 2001. 6 - The ship girder. In: *Basic Ship Theory.* Oxford: Butterworth-Heinemann, pp. 177-236.

Reliability Engineering Resource Website, 2020. *Failure Mode and Effect Analysis (FMEA) and Failure Modes, Effects and Criticality Analysis (FMECA).* [Online]
Available at: https://www.weibull.com/basics/fmea.htm
[Accessed 28 January 2020].

Requirements.com, 2020. *What is Requirements Traceability?.* [Online]
Available at: https://requirements.com/Content/What-is/what-is-requirements-traceability
[Accessed 4 Septemeber 2020].

Reza-E-Rabby, M. et al., 2018. Joining thick section aluminum to steel with suppressed FeAl intermetallic formation via friction stir dovetailing. *Scripta Materialia,* 148(2018), pp. 63-67.

Reza-E-Rabby, M., Ross, K., McDonnell, M. & Whalen, S. A., 2020. Numerical simulation and experimental validation of joint performance in aluminum-steel lap welds formed by friction stir dovetailing. *Journal of Materials Processing Technology,* 277(2020).

Sandeepa Sarma, K. L. N., Srikanth, A. & Venkateshwarlu, B., 2020. *Methodological approach for best tool geometry determination in friction stir welding process.* India, Vellore Institute of Technology.

Shah, P. H. & Bradheka, V. J., 2019. Friction stir welding of aluminium alloys: An overview of experimental findings – Process, variables, development and applications. *Journal of Materials: Design and Applications,* 233(6), pp. 1191-1226.

Simple Mind, 2020. *Mind Mapping.* [Online]
Available at: https://simplemind.eu/how-to-mind-map/basics/
[Accessed 1 Septemeber 2020].

Smith, I. J. & Lord, D. D. R., 2007. FSW Patents - A Stirring Story. *SAE Transactions,* Volume 116, pp. 772-780.

Thomas, W. M. et al., 1997. *Friction stir welding.* GB, Patent No. GB2306366.

Threadgill, P. L., Leonard, A. J., Shercliff, H. R. & Withers, P. J., 2009. Friction Stir Welding of Aluminium Alloys. *International Materials Reviews,* 54(2), pp. 49-93.

Thurlow, D. et al., 2020. *Establishing the most important business factors of a company produced weld* [Interview] (1 September 2020).

Tsavdaridis, K. D. et al., 2019. Application of structural topology optimisation in aluminium cross-sectional design. *Thin-Walled Structures,* Volume 139, pp. 372-388.

TWI, 2020a. *WHAT IS WELDING? - DEFINITION, PROCESSES AND TYPES OF WELDS.* [Online]
Available at: https://www.twi-global.com/technical-knowledge/faqs/what-is-welding
[Accessed 1 September 2020].

TWI, 2020b. *FRICTION STIR WELDING.* [Online]
Available at: https://www.twi-global.com/technical-knowledge/job-knowledge/friction-stir-welding-147
[Accessed 1 October 2020].

TWI, 2020c. *FRICTION STIR WELDING PATENTS - A STIRRING STORY.* [Online]
Available at: https://www.twi-global.com/media-and-events/insights/friction-stir-welding-patents-a-

stirring-story#:~:text=Friction%20Stir%20Welding%20(FSW)%2C,number%20of%20related%20patent%20filings.&text=The%20filings%20made%20cover%20the,and%20improvements%20to%20th
[Accessed 2 October 2020].

TWI, 2020d. *FRICTION STIR WELDING OF AIRFRAME STRUCTURES.* [Online]
Available at: https://www.twi-global.com/who-we-are/who-we-work-with/industry-sectors/aerospace/joining-of-airframe-structures/friction-stir-welding-of-airframe-structures
[Accessed 6 October 2020].

TWI, 2020e. *WHAT IS FRICTION STIR WELDING (FSW)? - PROCESS AND APPLICATIONS.* [Online]
Available at: https://www.twi-global.com/technical-knowledge/faqs/faq-what-is-friction-stir-welding
[Accessed 4 October 2020].

TWI, 2020f. *FUNCTIONS, DESIGNS AND MATERIALS OF FRICTION STIR WELDING TOOLS.* [Online]
Available at: https://www.twi-global.com/technical-knowledge/faqs/friction-stir-welding-tools
[Accessed 10 October 2020].

Vorley, G., 2008. Mini Guide to Root Cause Analysis. *Quality and Management Training Limited,* p. 3.

Weigers, K. E., 2003. *Software Requirements:Practical techniques for gathering and managing requirements throughout the product development cycle.* 2003 ed. Redmond: Microsoft Press.

Wittwer, J. W., 2019. *SWOT Analysis Template.* [Online]
Available at: https://www.vertex42.com/ExcelTemplates/swot-analysis-template.html
[Accessed 1 September 2020].

Zuo, L., Zuo, D., Zhu, Y. & Wang, H., 2018. Effect of process parameters on surface topography of friction stir welding. *The International Journal of Advanced Manufacturing Technology,* Volume 98, p. 1807–1816.

Zurich, 2021. *Local exhaust ventilation equipment.* [Online]
Available at: https://www.zurich.co.uk/en/engineering/inspection/lev-equipment
[Accessed 16 January 2021].

Bibliography

Abhijit Banik, Abhijit Saha, John Deb Barma, Uttam Acharya, Subhash Chandra Saha*, Determination of best tool geometry for friction stir welding of AA 6061-T6 using hybrid PCA-TOPSIS optimization method,* Measurement, 2020, 108573, ISSN 0263-2241.

D.G. Hattingh, C. Blignault, T.I. van Niekerk, M.N. James, *Characterization of the influences of FSW tool geometry on welding forces and weld tensile strength using an instrumented tool,* Journal of Materials Processing Technology, Volume 203, Issues 1–3, 2008, Pages 46-57, ISSN 0924-0136.

K.L.N. Sandeepa Sarma, Akella Srikanth, B. Venkateshwarlu, *Methodological approach for best tool geometry determination in friction stir welding process,* Materials Today: Proceedings, 2020, ISSN 2214-7853,

Appendices

Appendix 1 - TIG FSW Time Comparison

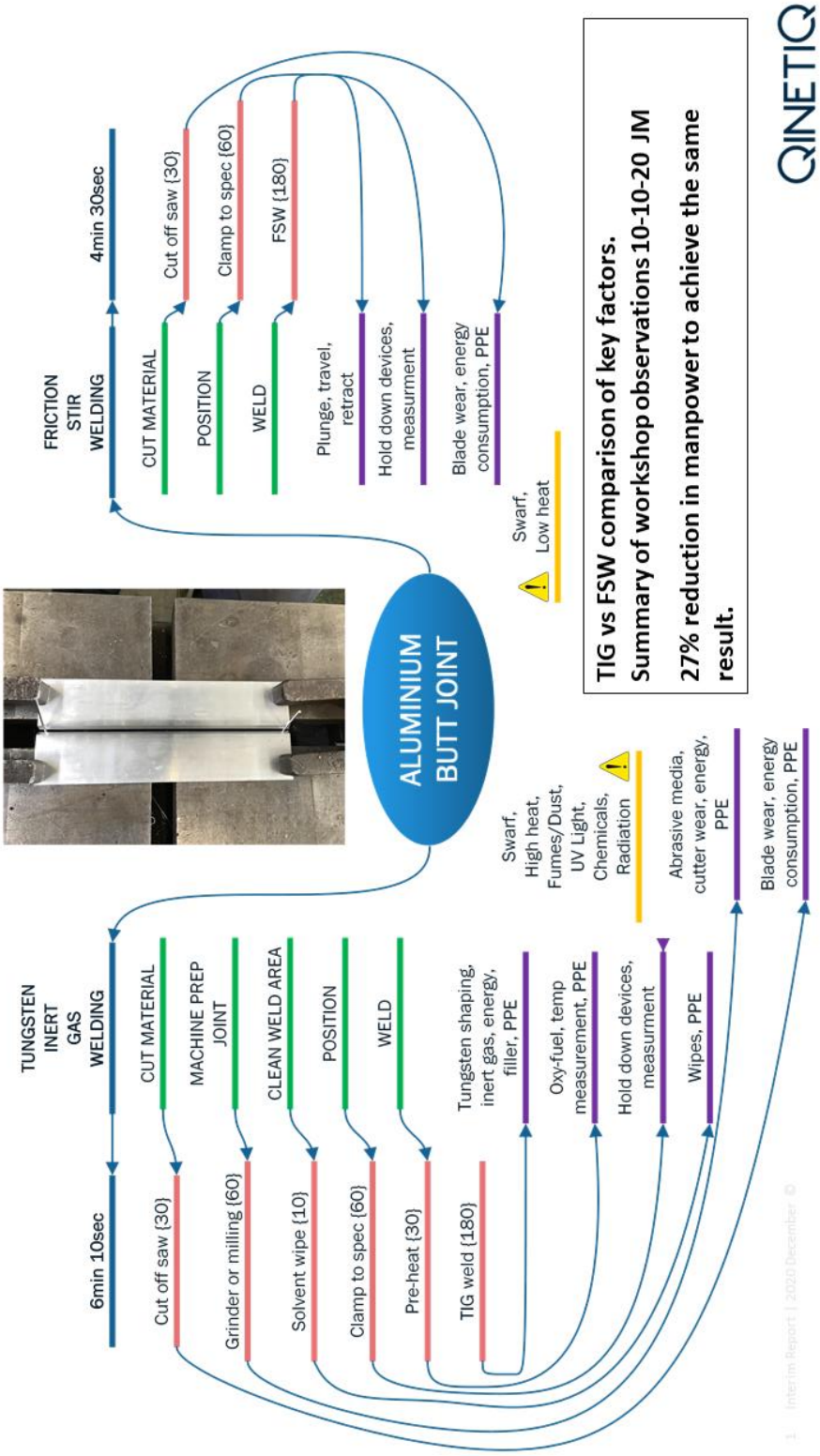

Appendix 2 - Aluminium Datasheets

Aluminium Alloy 6082 - T6~T651 Plate

aalco®

SPECIFICATIONS

Commercial	6082
EN	6082

Aluminium alloy 6082 is a medium strength alloy with excellent corrosion resistance. It has the highest strength of the 6000 series alloys. Alloy 6082 is known as a structural alloy. In plate form, 6082 is the alloy most commonly used for machining. As a relatively new alloy, the higher strength of 6082 has seen it replace 6061 in many applications. The addition of a large amount of manganese controls the grain structure which in turn results in a stronger alloy. It is difficult to produce thin walled, complicated extrusion shapes in alloy 6082. The extruded surface finish is not as smooth as other similar strength alloys in the 6000 series.
In the T6 and T651 temper, alloy 6082 machines well and produces tight coils of swarf when chip breakers are used.

Applications
6082 is typically used in:
~ Highly stressed applications
~ Trusses
~ Bridges
~ Cranes
~ Transport applications
~ Ore skips
~ Beer barrels
~ Milk churns

CHEMICAL COMPOSITION

BS EN 573-3:2009
Alloy 6082

Element	% Present
Silicon (Si)	0.70 - 1.30
Magnesium (Mg)	0.60 - 1.20
Manganese (Mn)	0.40 - 1.00
Iron (Fe)	0.0 - 0.50
Chromium (Cr)	0.0 - 0.25
Zinc (Zn)	0.0 - 0.20
Others (Total)	0.0 - 0.15
Titanium (Ti)	0.0 - 0.10
Copper (Cu)	0.0 - 0.10
Other (Each)	0.0 - 0.05
Aluminium (Al)	Balance

ALLOY DESIGNATIONS

Aluminium alloy 6082 also corresponds to the following standard designations and specifications **but may not be a direct equivalent:**
AA6082
HE30
DIN 3.2315
EN AW-6082
ISO: Al Si1MgMn
A96082

TEMPER TYPES

The most common tempers for 6082 aluminium are:

- T6 - Solution heat treated and artificially aged
- O - Soft
- T4 - Solution heat treated and naturally aged to a substantially stable condition
- T651 - Solution heat treated, stress relieved by stretching then artificially aged

SUPPLIED FORMS

Alloy 6082 T6 & T651 is typically supplied as Plate and Shate.

- Plate
- Sheet

GENERIC PHYSICAL PROPERTIES

Property	Value
Density	2.70 g/cm³
Melting Point	555 °C
Thermal Expansion	24 x10^{-6} /K
Modulus of Elasticity	70 GPa
Thermal Conductivity	180 W/m.K
Electrical Resistivity	0.038 x10^{-6} Ω .m

[1 OF 2] CONTINUED

Aalco is a registered trademark of Aalco Metals Ltd
© Copyright: Aalco Metals Ltd, Parkway House, Unit 6 Parkway Industrial Estate, Wednesbury WS10 7WP

Aluminium Datasheets 2 of 2 (Aalco, 2019)

Aluminium Alloy
6082 - T6~T651 Plate

aalco®

MECHANICAL PROPERTIES

BS EN 485-2:2008
Plate
6.00m to 12.5mm

Property	Value
Proof Stress	255 Min MPa
Tensile Strength	300 Min MPa
Elongation A50 mm	9 Min %
Hardness Brinell	91 HB

Properties above are for material in the T6 and T651 condition

BS EN 485-2:2008
Plate
12.5mm to 100.00mm

Property	Value
Proof Stress	240 Min MPa
Tensile Strength	295 Min MPa
Hardness Brinell	89 HB

Properties above are for material in the T6 and T651 condition

BS EN 485-2:2008
Plate
100.00mm to 150.00mm

Property	Value
Proof Stress	240 Min MPa
Tensile Strength	275 Min MPa
Hardness Brinell	84 HB
Elongation A	6 Min %

Properties above are for material in the T6 and T651 condition

WELDABILITY

6082 has very good weldability but strength is lowered in the weld zone. When welded to itself, alloy 4043 wire is recommended. If welding 6082 to 7005, then the wire used should be alloy 5356.

Weldability – Gas: Good
Weldability – Arc: Good
Weldability – Resistance: Good
Brazability: Good
Solderability: Good

FABRICATION

Workability - Cold: Good
Machinability: Good

CONTACT

Address: Please make contact directly with your local service centre, which can be found via the Locations page of our web site
Web: www.aalco.co.uk

REVISION HISTORY

Datasheet Updated 18 July 2019

DISCLAIMER

This Data is indicative only and as such is not to be relied upon in place of the full specification. In particular, mechanical property requirements vary widely with temper, product and product dimensions. All information is based on our present knowledge and is given in good faith. No liability will be accepted by the Company in respect of any action taken by any third party in reliance thereon.

Please note that the 'Datasheet Update' date shown above is no guarantee of accuracy or whether the datasheet is up to date.

The information provided in this datasheet has been drawn from various recognised sources, including EN Standards, recognised industry references (printed & online) and manufacturers' data. No guarantee is given that the information is from the latest issue of those sources or about the accuracy of those sources.

Material supplied by the Company may vary significantly from this data, but will conform to all relevant and applicable standards.

As the products detailed may be used for a wide variety of purposes and as the Company has no control over their use; the Company specifically excludes all conditions or warranties expressed or implied by statute or otherwise as to dimensions, properties and/or fitness for any particular purpose, whether expressed or implied.

Advice given by the Company to any third party is given for that party's assistance only and without liability on the part of the Company. All transactions are subject to the Company's current Conditions of Sale. The extent of the Company's liabilities to any customer is clearly set out in those Conditions; a copy of which is available on request.

[2 OF 2]

Aalco is a registered trademark of Aalco Metals Ltd
© Copyright: Aalco Metals Ltd, Parkway House, Unit 6 Parkway Industrial Estate, Wednesbury WS10 7WP

Appendix 3 - Aalco Order

Please quote our PO number on all correspondence
Purchase Order No.: **300030522922**
Date: 20-10-2020

QINETIQ

Aalco Dyfed
Unit 3/4 Capel Hendre Ind Estate
Ammanford
CB
SA18 3SJ

FSS Purchasing
Building A2
Cody Technology Park
Farnborough
GU14 0LX
Hampshire
Phone :+441239
Email :

Deliver to:
QinetiQ Ltd, Main Stores
ABE
MOD Aberporth Range, Parcllyn
Cardigan
SA43 2BU
Ceredigion
For the attention of: Jake Mowbray

Version Dated 20-10-2020

Line	Item Description	Quantity	UOM	Unit Price (ex VAT)	Currency	Delivery By
1	2" x 1/4" x 5M Aluminium Flat Bar (6082)	4.000	EA	84.80	GBP	22-10-2020
2	Carriage	1.000	LOT	24.50	GBP	22-10-2020

ADDITIONAL INFORMATION

END OF PURCHASE ORDER LINES

All invoices must quote the Purchase Order number and be emailed to:

supplierinvoices@qinetiq.com

or posted to (please do not email and post the same invoice):

QinetiQ Processing Centre,
Building A2
Cody Technology Park
Ively Road
Farnborough
Hants
GU14 0LX

Invoice enquiries to FSSAccountsPayable@QinetiQ.com

Please note QinetiQ do not accept proforma invoices
Payment terms 60 days from receipt of a valid invoice at the address above

If this Purchase Order is for a service please send a confirmation of completion or part completion, at the same time as the invoice is submitted, to:

QinetiQ Limited, Registered in England and Wales: Company number: 3796233
Registered Office: Cody Technology Park, Ively Road, Farnborough, GU14 0LX, United Kingdom
Trading address: Cody Technology Park, Cody Building, Ively Road, Farnborough, Hampshire, GU14 0LX, United Kingdom
VAT No. GB 770798385

Page 1 of 8

Appendix 4 - FSW Tooling Drawing

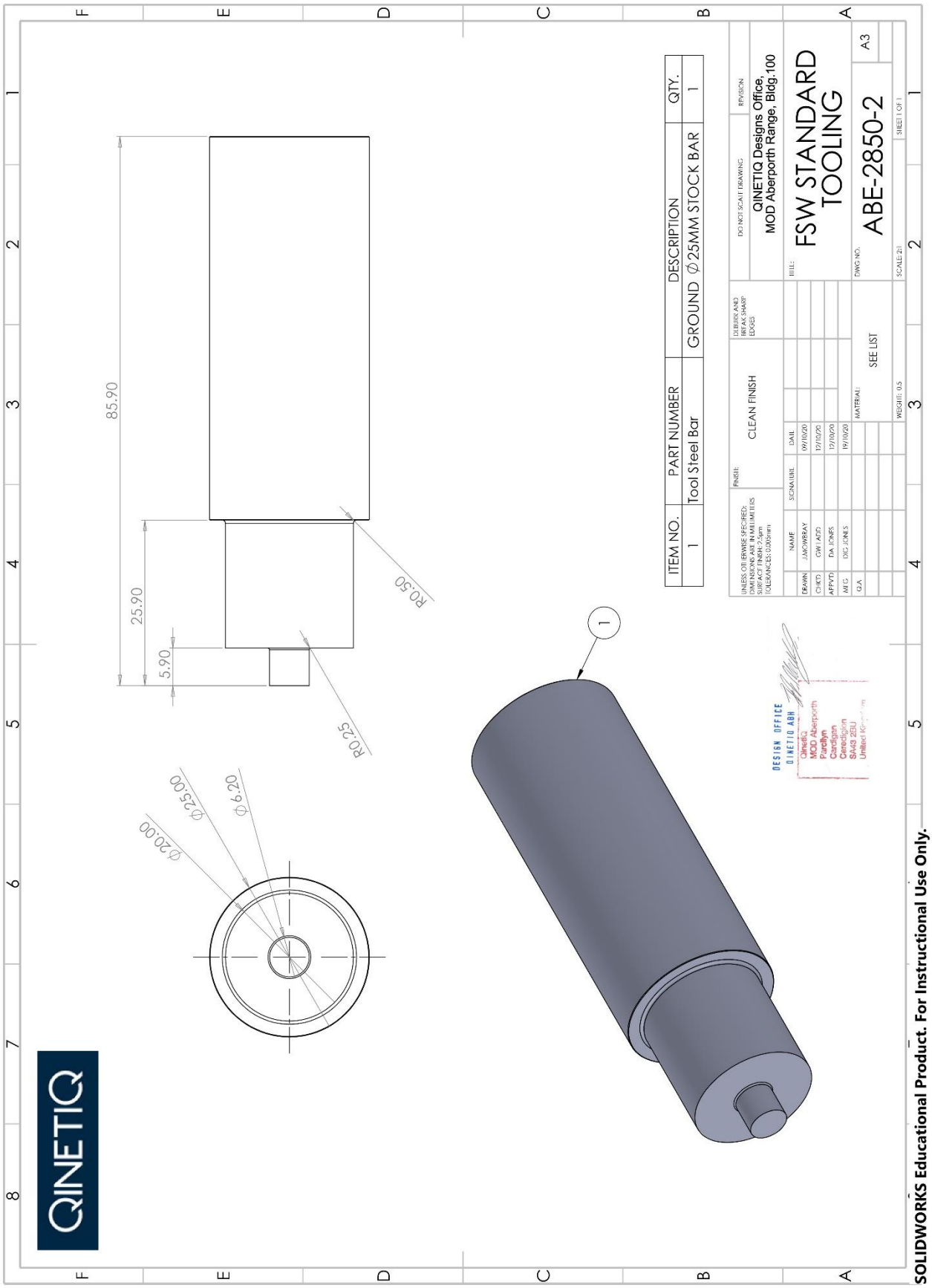
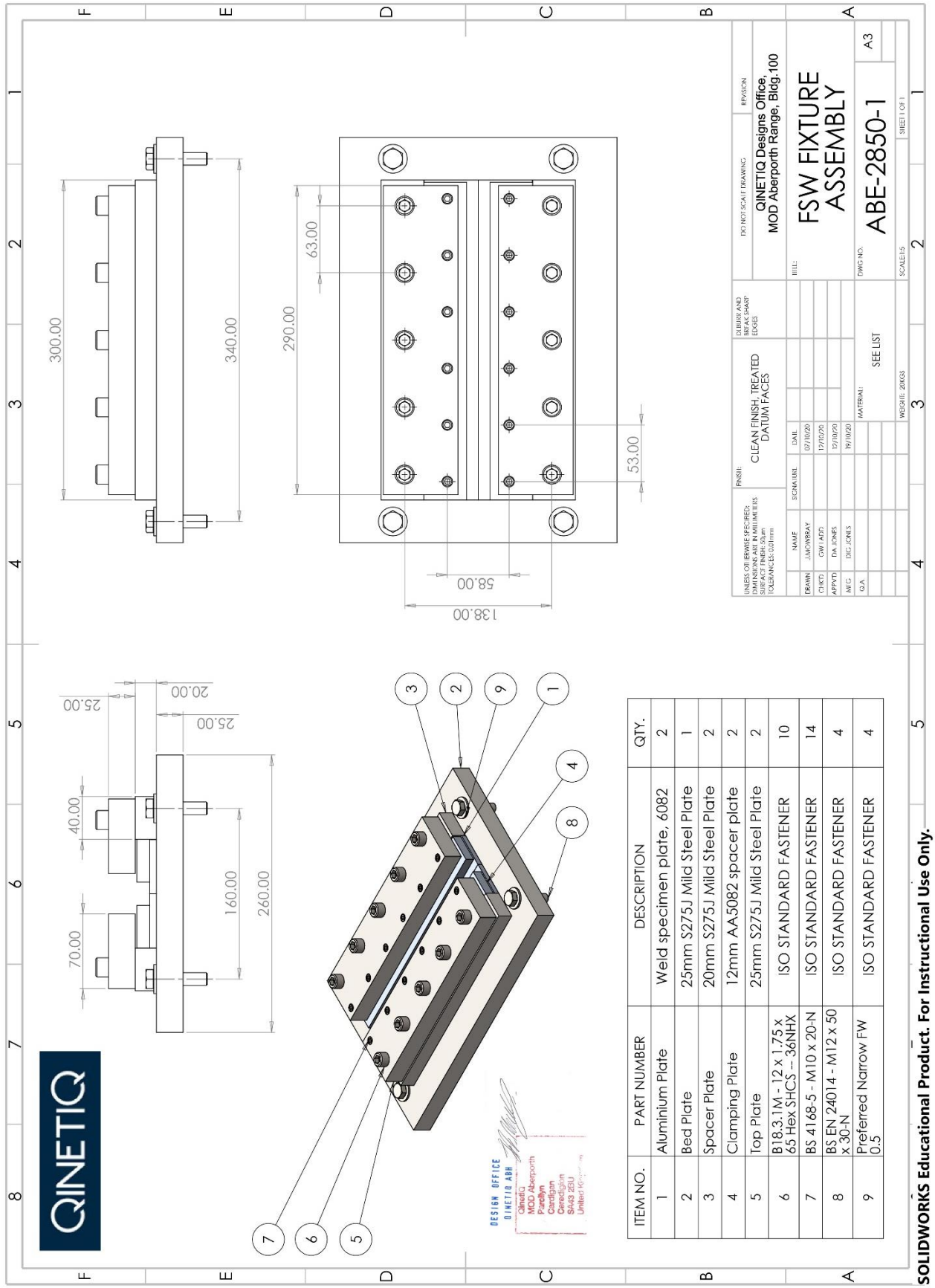
Appendix 5 - FSW Fixture Drawing