Swansea Metropolitan University
Prifysgol Fetropolitan Abertawe

Lateral Acceleration

Weight Transfer by Roll Stiffness Distribution

Weight transfer

When a car corners, load is transferred from the inner wheels to the outer wheels - this is weight transfer

Simple Case of Cornering Car with Rigid Suspension

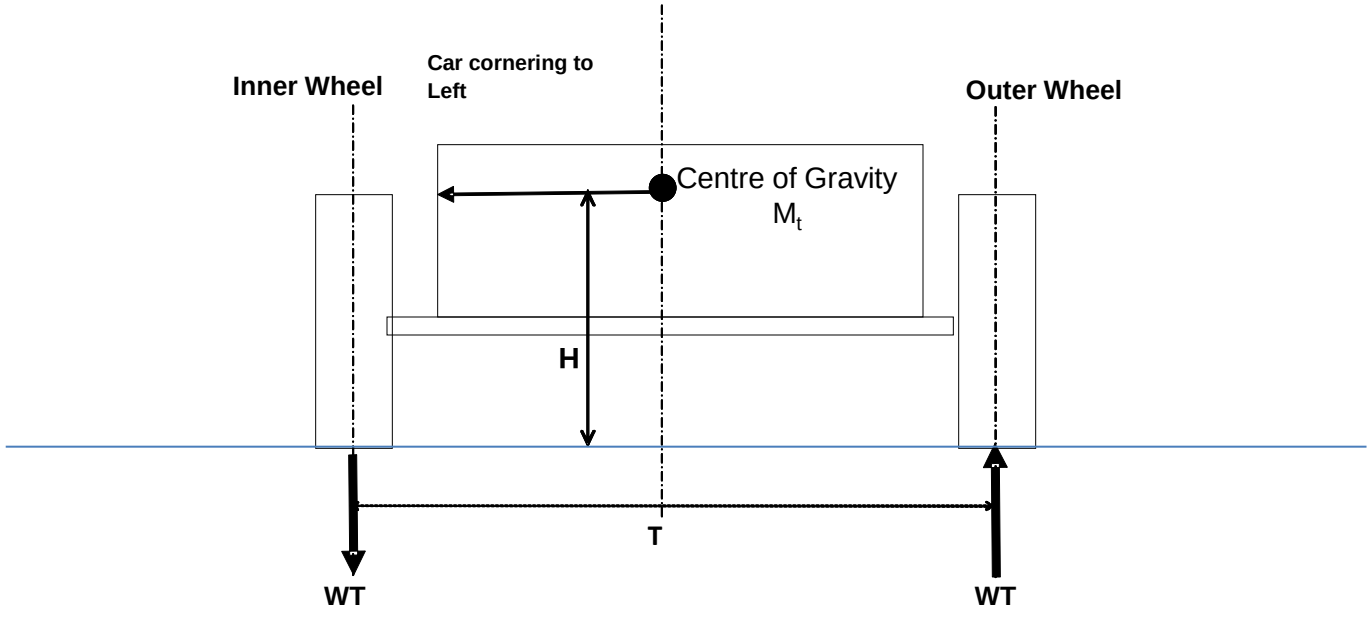

Simple lateral weight transfer calculation – rigid vehicle

Over turning moment = $M_t a_y H$

Reaction moment = WT x T

For equilibrium Reaction = Overturning moment

Giving $WT = \frac{M_t a_y H}{T}$

Real Cars

Real cars have suspensions which mean that the weight transfer is not equally distributed across front and rear axles

.

The total weight transfer remains the same but the proportion reacted by the front and rear axles will be determined by the characteristics of the suspensions such as roll centre heights and spring rates.

How weight transfer is transmitted

Elastic

Through the springs compressing and extending

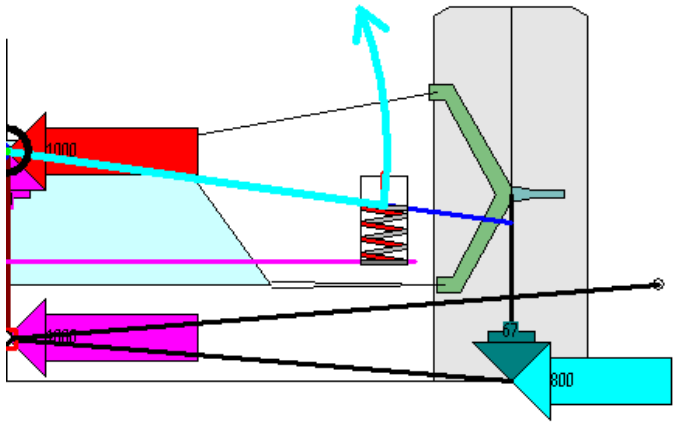

Geometric

Through the suspension linkage

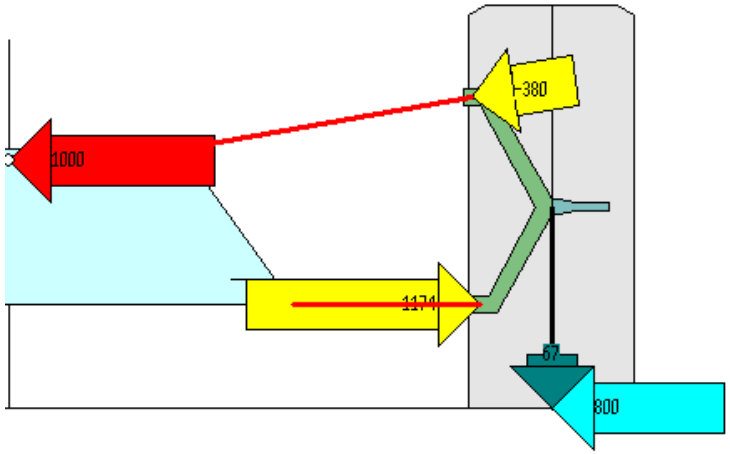

3 Types of Weight Transfer

1. ‘Elastic ‘ Weight transfer due to the sprung mass which is taken as acting about the roll centre and compresses the outside and extends the inside springs 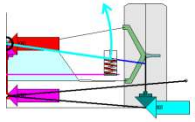

2. ‘Geometric ‘ Weight transfer due to sprung mass which is taken as acting at the roll centre height and passes through the suspension linkage 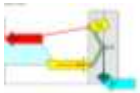

3. ‘Geometric ‘ Weight transfer due to the unsprung mass acting at approximately wheel centre height and passes through the suspension linkage 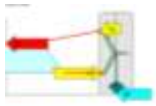

Example

To understand how the weight transfer is distributed front to rear the following example can be worked though

Example Data

Data

T_f	Front track	1.270 m
T_r	Rear track	1.335 m
L	Wheel base	2.248 m
H	CG height above roll axis	0.350 m
M_{sf}	Front sprung mass	312 kg
M_{sr}	Rear sprung mass	328 kg
M_{usf}	Front total unsprung mass	60 kg
M_{usr}	Rear total unsprung mass	70 kg
r	Rolling radius of tyre	0.277m
h_f	Front RC height	10 mm
h_r	Rear RC Height	50 mm
K_{wr}	Rear wheel rate	21875 N/m
K_{wf}	Front wheel rate	20483 N/m
K_{arr}	Rear anti roll bar wheel rate	4500 N/m
K_{arf}	Front anti roll bar wheel rate	5000 N/m
a_y	Lateral acceleration	$6 m/s^2$

Front suspension - unequal length double wishbones

Rear suspension - unequal length double wishbones

Adding effect of anti-roll bars

The wheel rates used in the calculations are increased by the wheel rate produced by the anti-roll bar.

So $K_{wf} = 25483$ N/m

$K_{Wr} = 26375$ N/m

Weight transfer due to sprung mass acting about the roll axis

The weight transfer produced by the sprung mass acting about the roll axis will be in proportion to the roll angle of the car. For an independent suspension car with low roll centres this is the most significant type of weight transfer.

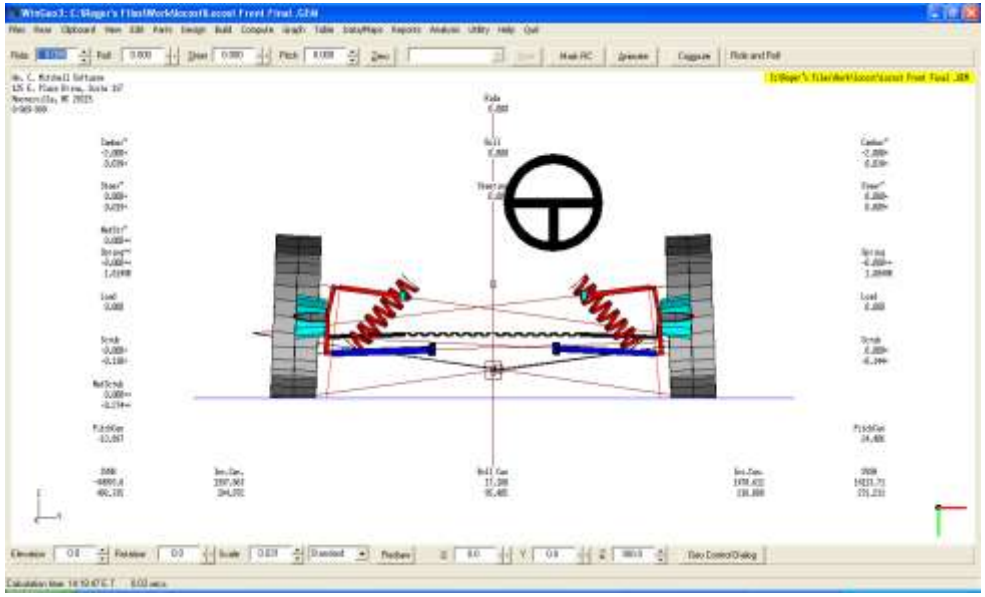

Weight transfer due to sprung mass acting about the roll axis

The roll angle at a given lateral acceleration is determined by the combined effect of the front and rear roll stiffnesses.

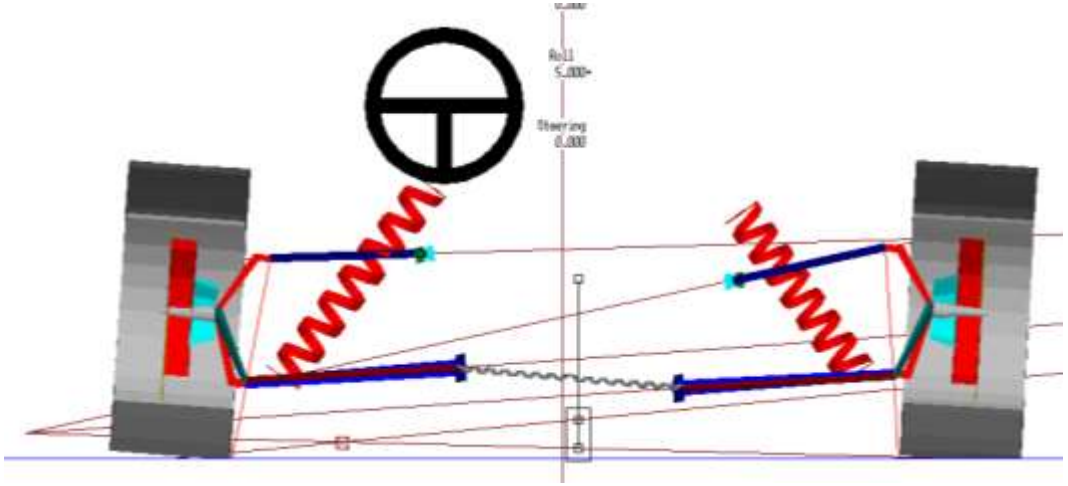

Weight transfer due to sprung mass acting about the roll axis

These roll stiffnesses also determine the front to rear distribution of this type of weight transfer .

.

Finding the roll angle

The first step to finding the weight transfer is to find the roll angle for a given lateral acceleration. This will enable the weight transfer to be determined.

How the roll angle is reached

The maximum roll angle that the car reaches in steady state cornering will occur when the overturning moment from the sprung mass acting about the roll centre is balanced by the opposing couple produced by the weight transfer times the car's track.

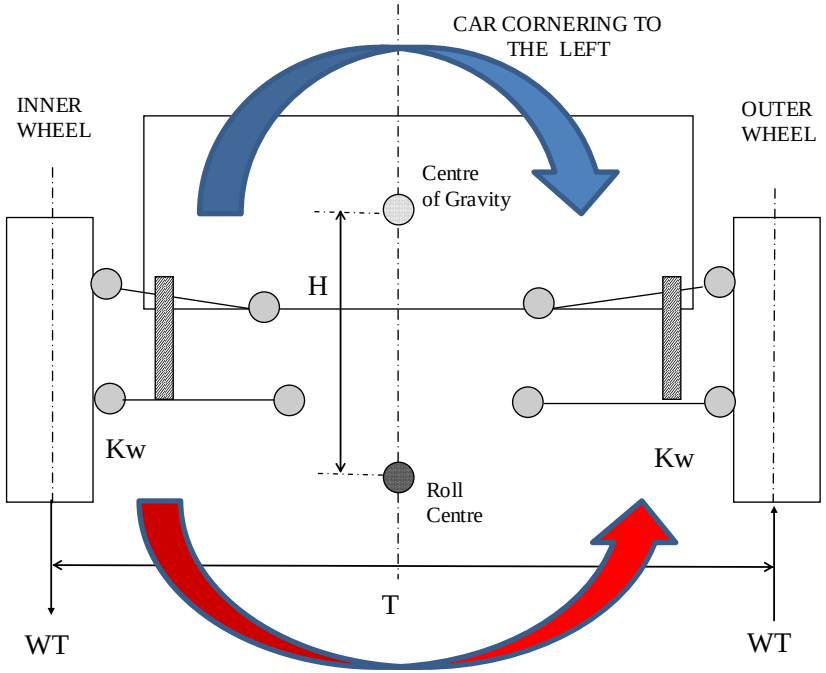

Vehicle roll

The diagram below symbolises a lateral axis of the body The car has rolled through θ radians causing a deflection of inner and out wheels of δ m. As a wheel rate of K_w is defined (which is the effective spring rate at the wheel) the wheel displacement can be taken as the effective spring displacement.

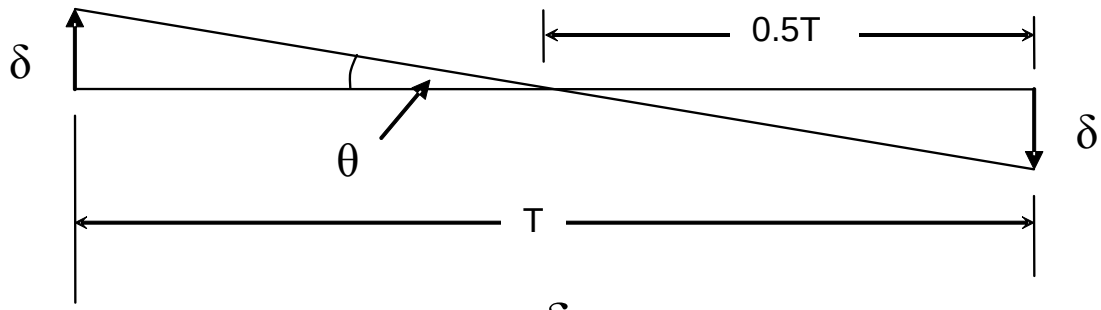

$$\theta = \frac{\delta}{0.5T}$$

$$\delta = \frac{T\theta}{2}$$ Eqn 3

Roll Moment

Anti- roll moment produced by the springs = M_{φ}

$$M\varphi = \delta \times Kw \times T$$ Equ 4

$$M\varphi = \frac{T\theta}{2} \times Kw \times T$$

$$M\varphi = \frac{T^2\theta \times Kw}{2}$$ Equ 5

Roll Stiffness

Roll stiffness of a suspension = K_φ Nm/rad

$$K_\varphi = \frac{M_\varphi}{\theta}$$

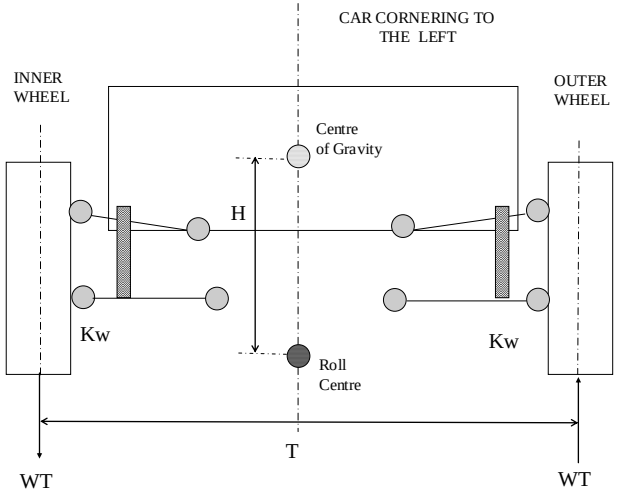

Substituting with $$M\varphi = \frac{T^2\theta \times Kw}{2}$$

Giving roll stiffness of an independent suspension

$$K_\varphi = \frac{(T^2 \times K_w)}{2}$$

Roll stiffness at each end

Front

$$K_{\varphi f} = \frac{(T_f^2 \times K_{wf})}{2} \qquad \text{Eqn 6f}$$

and similarly for the Rear

$$K_{\varphi r} = \frac{(T_r^2 \times K_{wr})}{2} \qquad \text{Eqn 6r}$$

.

.

Total Roll Stiffness for the Car

Total roll stiffness for the car = $K_{\varphi t}$

$$K_{\varphi t} = K_{\varphi f} + K_{\varphi r} \qquad \text{Eqn 7}$$

Roll Angle

When cornering, an overturning moment (M_{ot}) is produced by d'Alemberts force acting on the centre of mass about the roll axis with a moment arm of

$$Mot = Ms \times a_y \times H \quad [\text{Nm}] \qquad \text{Eqn 8}$$

With a linear spring, if a force, f N is applied to the spring of rate K [N/mm] then the deflection will be d [mm]

$$d = \frac{f}{K}$$

Similarly, if a couple of M_{ot} [Nm] is applied to a torsional spring of rate K_φ [Nm/rad] then the rotation produced will be θ [Radians]

$$\theta = \frac{M_{ot}}{K_\varphi} \qquad \text{Eqn 9}$$

Roll Angle

The roll angle produced by a lateral acceleration of $a_y = \theta$ Radians

$$\theta = \frac{M_{ot}}{K_{\varphi t}} \quad \text{Rad}$$

$$M_{ot} = M_s \times a_y \times H \quad \text{Nm}$$

$$K_{\varphi t} = K_{\varphi f} + K_{\varphi r} \quad \text{Nm/ Rad}$$

Solutions to example

- $K_{\varphi tf}$ = 20550 Nm/rad
- $K_{\varphi tr}$ = 23503 Nm/rad
- $K_{\varphi t}$ = 44053 Nm/rad
- M_{ot} = 1344 Nm
- Θ = 0.0305 rad (ie 1.75 deg)

Elastic weight transfer due to sprung mass acting about the roll axis

Knowing the value of θ, the weight transfer due to the sprung mass which is taken as acting about the roll centre axis can be determined.

Although still a simplification it can be assumed that the load transfer distribution front to rear for the sprung mass acting about the roll axis will be in proportion to the roll stiffness front to rear.

At each end of the car the increased spring load produced by the upward deflection of the outer wheel is equivalent to the weight transfer of the sprung mass acting about the roll axis, **WTs** . The chassis is assumed to be infinitely stiff and so roll angle **θ** is assumed to be the same at each end of the car.

$$WTs = \delta \times Kw$$

Elastic weight transfer WTs due to sprung mass at each end of the car

So

$$\delta = \frac{\theta \times T}{2}$$

$$WTsf = \frac{\theta \times Tf \times Kwf}{2}$$ Eqn 10f

and

$$WTsr = \frac{\theta \times Tr \times Kwr}{2}$$ Eqn 10r

ARB Front and Rear Results for WT_{sf} and WT_{sr}

- WT_{sf} = 493 N
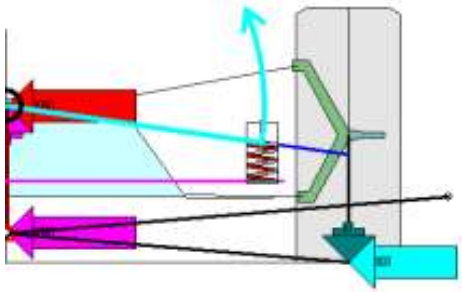
- WT_{sr} = 536 N