Bayer

Engineering Polymers

Part and Mold Design

THERMOPLASTICS

A Design Guide

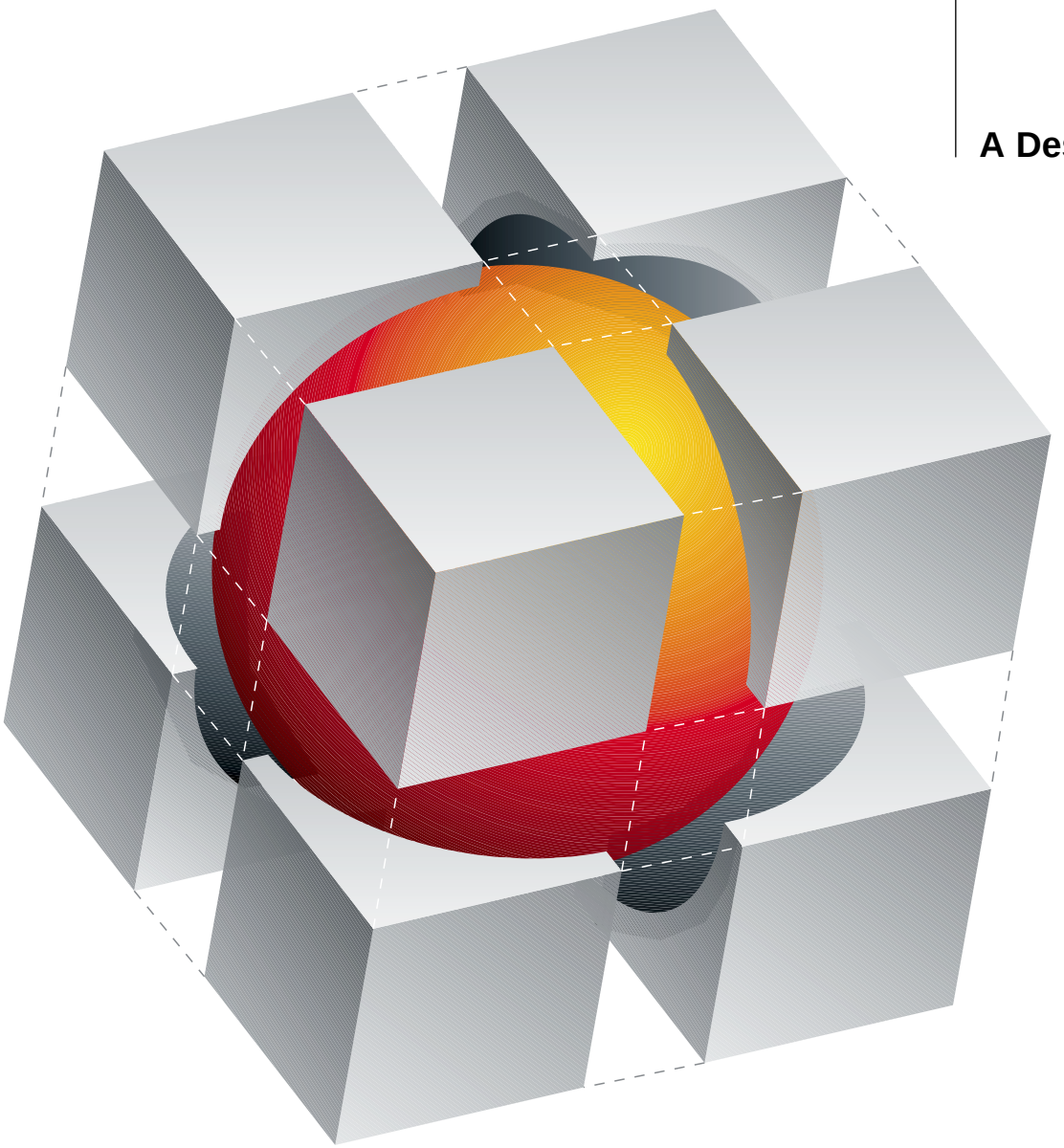

INTRODUCTION

A product of the Bayer Design Engineering Services Group, this manual is primarily intended as a reference source for part designers and molding engineers working with Bayer thermoplastic resins. The table of contents and index were carefully constructed to guide you quickly to the information you need either by topic or by keyword. The content was also organized to allow the manual to function as an educational text for anyone just entering the field of plastic-part manufacturing. Concepts and terminology are introduced progressively for logical cover-to-cover reading.

The manual focuses primarily on plastic part and mold design, but also includes chapters on the design process; designing for assembly; machining and finishing; and painting, plating, and decorating. For the most part, it excludes information covered in the following Bayer companion publications:

Material Selection: Thermoplastics and Polyurethanes: A comprehensive look at material testing and the issues to consider when selecting a plastic material.

Joining Techniques: Includes information and guidelines on the methods for joining plastics including mechanical fasteners, welding techniques, inserts, snap fits, and solvent and adhesive bonding.

Snap-Fit Joints for Plastics: Contains the engineering formulas and worked examples showing how to design snap-fit joints for Bayer thermoplastic resins.

This publication was written to assist Bayer's customers in the design and manufacture of products made from the Bayer line of thermoplastic engineering resins. These resins include:

- Makrolon® polycarbonate
- Apec® high-heat polycarbonate
- Bayblend® polycarbonate/ABS blend
- Makroblend® polycarbonate/ polyester blend
- Texin® and Desmopan® thermoplastic polyurethane

For information on these materials, please call 1-800-662-2927 or visit http://www.BayerMaterialScienceNAFTA.com.

The following additional products highlighted in this publication are now part of LANXESS Corporation:

- Cadon® SMA
- Centrex® ASA, AES and ASA/AES weatherable polymers
- Durethan® polyamide 6 and 66, and amorphous polyamide
- Lustran® and Novodur® ABS
- Lustran® SAN
- Pocan® PBT polyester
- Triax® polyamide/ABS blend

For information on these products, *please call LANXESS in North America at 1-800-LANXESS or visit:*

http://techcenter.lanxess.com/sty/americas/en/home/index.jsp for styrenic resins
http://techcenter.lanxess.com/scp/americas/en/home/index.jsp for polyamide resins

Most of the design principles covered in this manual apply to all of these resins. When discussing guidelines or issues for a specific resin family, we reference these materials either by their Bayer trade names or by their generic polymer type.

The material data scattered throughout the chapters is included by way of example only and may not reflect the most current testing. In addition, much of the data is generic and may differ from the properties of specific resin grades. For up-to-date performance data for specific Bayer resins, contact your Bayer sales representative or refer to the following information sources:

Bayer Engineering Polymers Properties Guide: Contains common single-point properties by resin family and grade.

Bayer Plastics Product Information Bulletin: Lists information and properties for a specific material grade.

Bayer CAMPUS: Software containing single and multi-point data that was generated according to uniform standards. Allows you to search grades of Bayer resins that meet a particular set of performance requirements.

www.bayer.com/polymers-usa: Bayer Web site containing product information on-line.

This manual provides general information and guidelines. Because each product application is different, always conduct a thorough engineering analysis of your design, and prototype test new designs under actual in-use conditions. Apply appropriate safety factors, especially in applications in which failure could cause harm or injury.

In addition to design manuals, Bayer Corporation provides design assistance in other forms such as seminars and technical publications. Bayer also offers a range of design engineering services to its qualified customers. Contact your Bayer sales representative for more information on these other services.

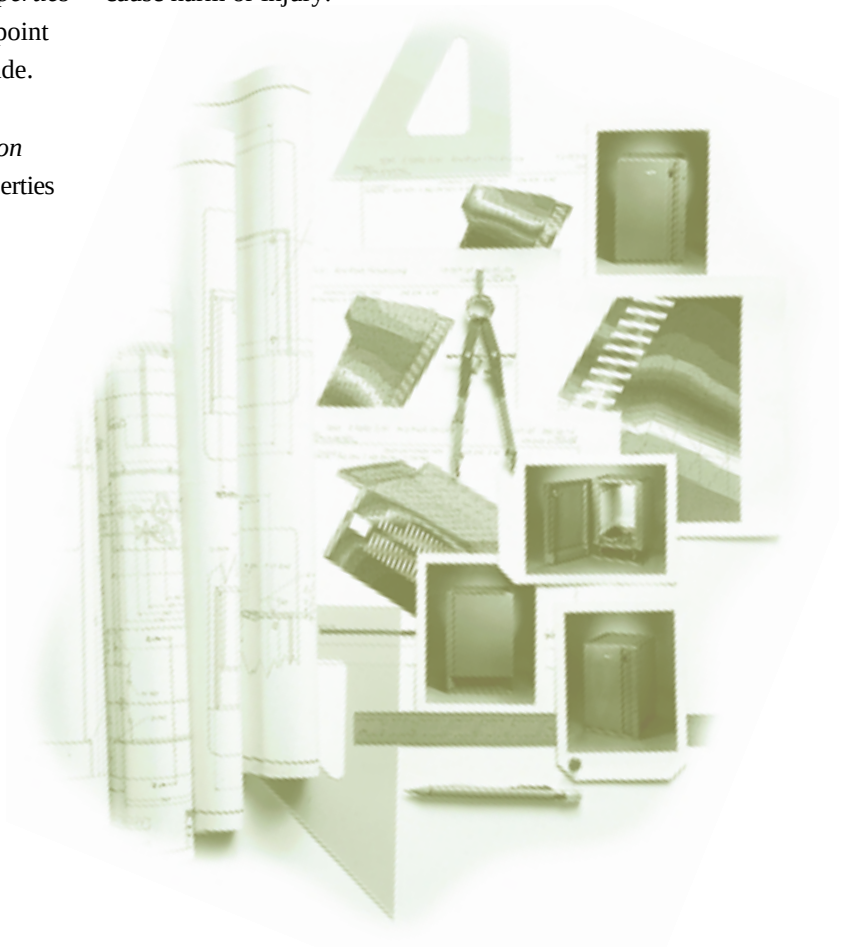

TABLE OF CONTENTS

Chapter 1
PART DESIGN PROCESS: CONCEPT TO FINISHED PART

7 Design Process

8 Defining Plastic Part Requirements

8 Mechanical Loading

8 Temperature

8 Chemical Exposure

8 Electrical Performance

8 Weather Resistance

8 Radiation

8 Appearance

9 Agency Approvals

9 Life Expectancy

9 Dimensional Tolerances

9 Processing

9 Production Quantities

9 Cost Constraints

10 Assembly

10 Thermoplastic Processing Methods

10 Injection Molding

11 Extrusion

12 Thermoforming

12 Blow Molding

13 Rotomolding

13 Optimizing Product Function

14 Consolidation

14 Hardware

14 Finish

15 Markings and Logos

15 Miscellaneous

15 Reducing Manufacturing Costs

15 Materials

16 Overhead

17 Labor

17 Scrap and Rework

17 Prototype Testing

Chapter 2
GENERAL DESIGN

19 Wall Thickness

22 Flow Leaders and Restrictors

24 Ribs

24 Rib Design

24 Rib Thickness

26 Rib Size

27 Rib Location and Numbers

27 Bosses

30 Gussets

30 Sharp Corners

32 Draft

33 Holes and Cores

34 Undercuts

34 Slides and Cores

36 Louvers and Vents

37 Molded-In Threads

40 Lettering

40 Tolerances

42 Bearings and Gears

Chapter 3
STRUCTURAL DESIGN

45 Structural Considerations In Plastics
46 Stiffness
46 Viscoelasticity
48 Stress-Strain Behavior
50 Molding Factors
51 Short-Term Mechanical Properties
51 Tensile Properties
52 Tensile Modulus
52 Tensile Stress at Yield
52 Tensile Stress at Break
53 Ultimate Strength
53 Poisson's Ratio
53 Compressive Properties
53 Flexural Modulus
53 Coefficient of Friction
54 Long-Term Mechanical Properties
54 Creep Properties
56 Stress Relaxation
56 Fatigue Properties
58 Structural Design Formulas
58 Use of Moduli
59 Stress and Strain Limits
60 Uniaxial Tensile and Compressive Stress
61 Bending and Flexural Stress
65 Shear Stress
66 Torsion
67 Designing for Stiffness
67 Part Shape
70 Wall Thickness
71 Ribs
73 Long-Term Loading
76 Designing for Impact
78 Fatigue Applications
80 Thermal Loading

Chapter 4
DESIGN FOR ASSEMBLY

83 Part Consolidation
84 Mechanical Fasteners
85 Snap-Fit Joints
88 Welding and Bonding
89 Ultrasonic Welding
90 Vibration and Hot-Plate Welding
91 Spin Welding
91 Solvent and Adhesive Bonding
92 Retention Features
92 Alignment Features
94 Orientation
94 Expansion Differences
94 Tolerances

Chapter 5
MACHINING AND FINISHING

97 Drilling and Reaming
99 Tapping
99 Sawing
100 Punching, Blanking, and Die Cutting
101 Milling
101 Turning and Boring
102 Laser Machining
103 Filing
103 Sanding
103 Polishing and Buffing
104 Trimming, Finishing, and Flash Removal

Chapter 6
PAINTING, PLATING, AND DECORATING

105 Painting
105 Types of Paints
106 Paint Curing
106 Paint-Selection Considerations
107 Spray Painting
108 Other Painting Methods
108 Masking
109 Other Design Considerations for Painting
109 In-Mold Decorating
110 Film-Insert Molding
111 Metallic Coatings
111 Electroplating
112 Design Considerations for Electroplating
113 Molding Considerations for Electroplating
114 Vacuum Metallization
115 Design Considerations for Vacuum Metallization
115 EMI/RFI Shielding
115 Design Considerations for EMI/RFI Shielding
116 Printing
118 Labels and Decals
119 Texture

Chapter 7
MOLD DESIGN

121 Mold Basics
121 Types of Molds
124 Mold Bases and Cavities
125 Molding Undercuts
128 Part Ejection
130 Mold Venting
130 Parting-Line Vents
131 Vent Placement
133 Sprues, Runners, and Gates
133 Sprues
134 Runners
137 Runners for Multicavity Molds
140 Gates
144 Other Gate Designs
145 Gate Optimization
147 Gate Position
149 Hot-Runner Systems
149 Hot-Runner Designs
149 Hot-Runner Gates
151 Valve Gates
151 Thermal Expansion and Isolation
152 Flow Channel Size
153 **Mold Cooling**
154 Mold-Cooling Considerations
155 Cooling-Channel Placement
158 Cooling-Line Configuration
159 Coolant Flow Rate
160 Mold Shrinkage
162 Mold Metals
163 Surface Treatments
164 Mold Cost and Quality

APPENDICES

165 Index
169 Part Design Checklist

Chapter 1

PART DESIGN PROCESS: CONCEPT TO FINISHED PART

Many factors affect plastic-part design. Among these factors are: functional requirements, such as mechanical loading and ultraviolet stability; aesthetic needs, such as color, level of transparency, and tactile response; and economic concerns, such as cost of materials, labor, and capital equipment. These factors, coupled with other design concerns — such as agency approval, processing parameters, and part consolidation — are discussed in this chapter.

DESIGN PROCESS

Like a successful play in football, successful plastic product design and production requires team effort and a well-developed strategy. When designing plastic parts, your team should consist of diverse players, including conceptual designers, stylists, design engineers, materials suppliers, mold makers, manufacturing personnel, processors, finishers, and decorators. Your chance of producing a product that successfully competes in the marketplace increases when your strategy takes full advantage of team strengths, accounts for members' limitations, and avoids overburdening any one person. As the designer, you must consider these factors early in strategy development and make adjustments based upon input from the various people on the design team.

Solicit simultaneous input from the various "players" early in product development, before many aspects of the design have been determined and cannot be changed. Accommodate suggestions for enhancing product performance, or for simplifying and improving the various manufacturing steps such as mold construction, processing, assembly, and finishing. Too often designs pass sequentially from concept development to manufacturing steps with features that needlessly complicate production and add cost.

Early input from various design and manufacturing groups also helps to focus attention on total product cost rather than just the costs of individual items or processes. Often adding a processing step and related cost in one area produces a greater reduction in total product cost. For example, adding snap latches and nesting features may increase part and mold costs, and at the same time, produce greater savings in assembly operations and related costs. Likewise, specifying a more-expensive resin with molded-in color and UV resistance may increase your raw-material cost, while eliminating painting costs.

When designing and developing parts, focus on defining and maximizing part function and appearance, specifying actual part requirements, evaluating process options, selecting an appropriate material, reducing manufacturing costs, and conducting prototype testing. For the reasons stated above, these efforts should proceed simultaneously.

DEFINING PLASTIC PART REQUIREMENTS

Thoroughly ascertain and evaluate your part and material requirements, which will influence both part design and material selection. When evaluating these requirements, consider more than just the intended, end-use conditions and loads: Plastic parts are often subjected to harsher conditions during manufacturing and shipping than in actual use. Look at all aspects of part and material performance including the following.

Mechanical Loading

Carefully evaluate all types of mechanical loading including short-term static loads, impacts, and vibrational or cyclic loads that could lead to fatigue. Ascertain long-term loads that could cause creep or stress relaxation. Clearly identify impact requirements.

Temperature

Many material properties in plastics — impact strength, modulus, tensile strength, and creep resistance to name a few — vary with temperature. Consider the full range of end-use temperatures, as well as temperatures to which the part will be exposed during manufacturing, finishing, and shipping. Remember that impact resistance generally diminishes at lower temperatures.

Chemical Exposure

Plastic parts encounter a wide variety of chemicals both during manufacturing and in the end-use environment, including mold releases, cutting oils, degreasers, lubricants, cleaning solvents, printing dyes, paints, adhesives, cooking greases, and automotive fluids. Make sure that these chemicals are compatible with your selected material and final part.

Electrical Performance

Note required electrical property values and nature of electrical loading. For reference, list materials that are known to have sufficient electrical performance in your application. Determine if your part requires EMI shielding or UL testing.

Weather Resistance

Temperature, moisture, and UV sun exposure affect plastic parts' properties and appearance. The end-use of a product determines the type of weather resistance required. For instance, external automotive parts such as mirror housings must withstand continuous outdoor exposure and perform in the full range of weather conditions. Additionally, heat gain from sun on dark surfaces may raise the upper temperature requirement considerably higher than maximum expected temperatures. Conversely, your requirements may be less severe if your part is exposed to weather elements only occasionally. For example, outdoor Christmas decorations and other seasonal products may only have to satisfy the requirements for their specific, limited exposure.

Radiation

A variety of artificial sources — such as fluorescent lights, high-intensity discharge lamps, and gamma sterilization units — emit radiation that can yellow and/or degrade many plastics. If your part will be exposed to a radiation source, consider painting it, or specifying a UV-stabilized resin.

Appearance

Aesthetic requirements can entail many material and part-design issues. For example, a need for transparency greatly reduces the number of potential plastics, especially if the part needs high clarity. Color may also play an important role. Plastics must often match the color of other materials used in parts of an assembly. Some applications require the plastic part to weather at the same rate as other materials in an assembly.

In resins, custom colors generally cost more than standard colors, particularly for small-order quantities. For certain colors and effects, some parts may need to be painted or decorated in the mold. Depending upon the application, parts with metallic finishes may require painting, in-mold decorating or vacuum metallization. Surface finishes range from high-gloss to heavy-matte. Photoetching the mold steel can impart special surface textures for parts.

Styling concerns may dictate the product shape, look, and feel, especially if the product is part of a component system or existing product family. Note all cosmetic and non-cosmetic surfaces. Among other things, these areas may influence gate, runner, and ejector-pin positioning.

Many part designs must include markings or designs such as logos, warnings, instructions, and control labels. Determine if these features can be molded directly onto the part surface or if they must be added using one of the decorating methods discussed in Chapter 6.

Agency Approvals

Government and private agencies have specifications and approval cycles for many plastic parts. These agencies include Underwriters' Laboratories (UL) for electrical devices, Military (MIL) for military applications, Food and Drug Administration (FDA) for applications with food and bodily-fluid contact, United States Department of Agriculture (USDA) for plastics in meat and poultry equipment, and National Sanitation Foundation Testing Laboratory, Inc. (NSF) for plastics in food-processing and potable-water applications. Always check for compliance and approval from appropriate agencies. Determine if your part requires flame resistance in accordance with UL 94. If so, note rating and thickness.

Life Expectancy

Many functional parts need to meet certain life-cycle expectations. Life expectancy may involve a time duration — as in years of outdoor exposure — time at a specific set of conditions — such as hours in boiling water — or repetitions of an applied load or condition — as in number of gamma sterilization cycles or snap-arm deflections. Determine a reasonable life expectancy for your part.

Dimensional Tolerances

Many applications have features requiring tight tolerances for proper fit and function. Some mating parts require only that mating features have the same dimensions. Others must have absolute size and tolerance. Consider the effect of load, temperature, and creep on dimensions. Over-specification of tolerance can increase product cost significantly.

Processing

Determine if your part design places special demands on processing. For example, will the part need a mold geometry that is particularly difficult to fill, or would be prone to warpage and bow. Address all part-ejection and regrind issues.

Production Quantities

The number of parts needed may influence decisions, including processing methods, mold design, material choice, assembly techniques, and finishing methods. Generally for greater production quantities, you should spend money to streamline the process and optimize productivity early in the design process.

Cost Constraints

Plastic-part cost can be particularly important, if your molded part comprises all or most of the cost of the final product. Be careful to consider total system cost, not just part and material cost.

Assembly

Address assembly requirements, such as the number of times the product will be disassembled or if assembly will be automated. List likely or proposed assembly methods: screws, welds, adhesives, snap-latches, etc. Note mating materials and potential problem areas such as attachments to materials with different values of coefficient of linear thermal expansion. State any recycling requirements.

The **"Part Requirements and Design Checklist"** in the back of this manual serves as a guide when developing new products. Be sure not to overlook any requirements relevant to your specific application. Also do not over-specify your requirements. Because parts perform as intended, the costs of over-specification normally go uncorrected, needlessly increasing part cost and reducing part competitiveness.

THERMOPLASTIC PROCESSING METHODS

A variety of commercial methods are used to produce thermoplastic products. Each has its specific design requirements, as well as limitations. Usually part design, size, and shape clearly determine the best process. Occasionally, the part concept lends itself to more than one process. Because product development differs depending upon the process, your design team must decide which process to pursue early in product development. This section briefly explains the common processes used for thermoplastics from Bayer Corporation.

Injection Molding

The most common processing method for Bayer thermoplastics, injection molding, involves forcing molten plastic into molds at high pressure. The plastic then forms to the shape of the mold as it cools and solidifies (see figure 1-1). Usually a quick-cycle process, injection molding can produce large quantities of parts, accommodate a wide variety of part sizes, offer excellent part-to-part repeatability, and make parts with relatively tight tolerances. Molds can produce intricate features and textures, as well as structural and assembly elements such as ribs and bosses. Undercuts and threads usually

Injection Molding **Figure 1-1**

The injection molding process can quickly produce large quantities of parts in multi-cavity molds.

Extrusion **Figure 1-2**

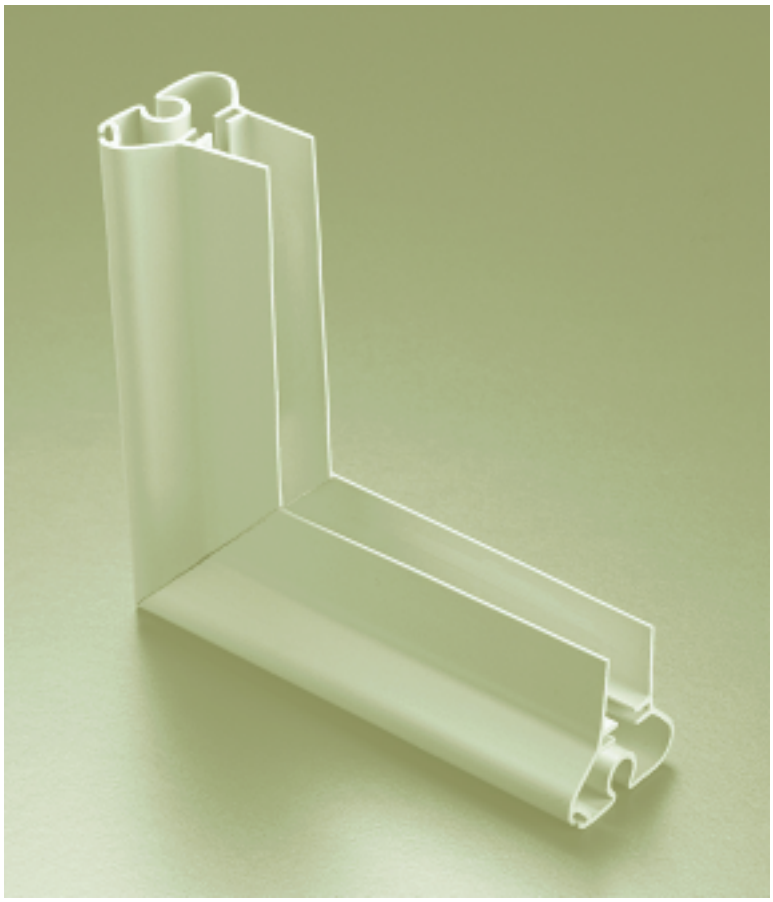

The extrusion process produces profile shapes used in the manufacture of window frames.

require mold mechanisms that add to mold cost.

The injection molding process generally requires large order quantities to offset high mold costs. For example, a $50,000 mold producing only 1,000 parts would contribute $50 to the cost of each part. The same mold producing 500,000 parts would contribute only $0.10 to part cost. Additionally, mold modifications for product design changes can be very expensive. Very large parts, such as automotive bumpers and fenders, require large and expensive molds and presses.

Extrusion

In extrusion forming, molten material continuously passes through a die that forms a profile which is sized, cooled, and solidified. It produces continuous, straight profiles, which are cut to length. Most commonly used for sheet, film, and pipe production, extrusion also produces profiles used in applications such as road markers, automotive trim, store-shelf price holders, and window frames (see figure 1-2). Production rates, measured in linear units, such as feet/minute, ordinarily are reasonably high. Typically inexpensive for simple profiles, extrusion dies usually contribute little to product cost. Part features such as holes or notches require secondary operations that add to final cost.

Thermoforming **Figure 1-3**

The automobile industry has taken advantage of the production efficiency, appearance, light weight, and performance of thermoformed engineering thermoplastics for many OEM and after-market products like this tonneau cover.

Thermoforming

Thermoforming creates shapes from a thermoplastic sheet that has been heated to its softening point. Applied vacuum or pressure draws or pushes the softened sheet over an open mold or form where it is then cooled to the conforming shape. The process of stretching the sheet over the form or mold causes thinning of the wall, especially along the sides of deep-drawn features. Mold or form costs for this low-pressure process are much lower than for injection molds of comparable size.

Thermoforming can produce large parts (see figure 1-3) on relatively inexpensive molds and equipment. Because the plastic is purchased as sheet stock, materials tend to be costly. Material selection is limited to extrusion grades. Secondary operations can play a large role in part cost. Thermoformed parts usually need to be trimmed to remove excess sheet at the part periphery. This process cannot produce features that project from the part surface such as ribs and bosses. Cutouts and holes require secondary machining operations.

Figure 1-4 **Blow Molding**

This large water bottle was blow molded in Makrolon polycarbonate resin.

Blow Molding

Blow molding efficiently produces hollow items such as bottles (see figure 1-4), containers, and light globes.

Design permitting, the process may also produce hollow shapes such as automotive air ducts and gas tanks. Wall thickness can vary throughout the part and may change with processing. Blow molding cannot produce features that project from the surface such as ribs and bosses. Part geometry determines mold and equipment costs, which can range as high as those for injection molding.

The two most-common types of blow molding are extrusion and injection. In **extrusion blow molding**, mold halves pinch the end of a hanging extruded tube — called a parison — until it seals. Air pressure applied into the tube expands the tube and forces it against the walls of the hollow mold. The blown shape then cools as a thin-walled hollow shape. A secondary step removes the vestige at the pinch-off area.

Injection blow molding substitutes a molded shape in place of the extruded parison. Air pressure applied from inside the still-soft molded shape expands the shape into the form of the hollow mold. This process eliminates pinch-off vestige and facilitates molded features on the open end such as screw threads for lids.

Figure 1-5 **Rotomolding**

Rotomolding can produce large hollow parts such as this polycarbonate street light globe.

Rotomolding

In **rotomolding**, a measured quantity of thermoplastic resin, usually powdered, is placed inside a mold, which is then externally heated. As the mold rotates on two perpendicular axes, the resin coats the heated mold surface. This continues until all the plastic melts to form the walls of the hollow, molded shape. While still rotating, the mold is cooled to solidify the shape.

This process is used for hollow shapes with large open volumes that promote uniform material distribution, including decorative streetlight globes (see figure 1-5) or hollow yard toys. Mold and equipment costs are typically low, and the process is suited to low-production quantities and large parts. Cycle times run very long. Large production runs may require multiple sets of molds.

OPTIMIZING PRODUCT FUNCTION

The molding process affords many opportunities to enhance part functionality and reduce product cost. For example, the per-part mold costs associated with adding functional details to the part design are usually insignificant. Molds reproduce many features practically for free. Carefully review all aspects of your design with an eye toward optimization, including part and hardware consolidation, finishing considerations, and needed markings and logos, which are discussed in this section.

Consolidation

Within the constraints of good molding practice and practical mold construction, look for opportunities to reduce the number of parts in an assembly through part consolidation. A single molded part can often combine the functionality of two or more parts.

Hardware

Clever part design can often eliminate or reduce the need for hardware fasteners such as screws, nuts, washers, and spacers. Molded-in hinges can replace metal ones in many applications (see figure 1-6). Molded-in cable guides perform the same function as metal ones at virtually no added cost. Reducing hardware lessens material and assembly costs, and simplifies dismantling for recycling.

Figure 1-6 **Hinges**

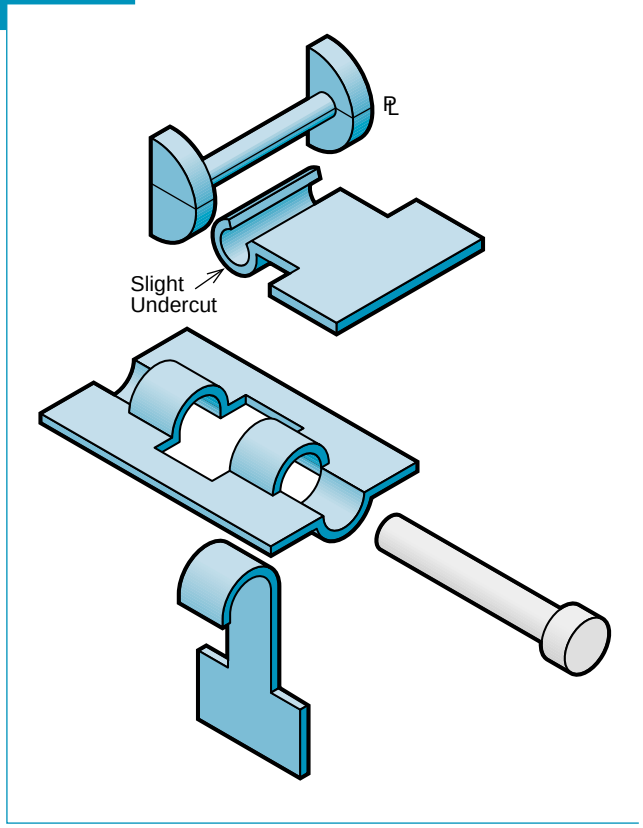

Molded-in hinge features can eliminate the need for hinge hardware.

Finish

Consider specifying a molded-in color instead of paint. The cost savings could more than justify any increase in material cost for a colored material with the required exposure performance. If you must paint, select a plastic that paints easily, preferably one that does not require surface etching and/or primer.

Markings and Logos

Secondary methods of adding directions, markings, and logos — including labels, decals, printing, stamping, etc. — add cost and labor. Molded-in techniques, when applied properly, produce permanent lettering and designs at a very low cost (see figure 1-7). Mixtures of gloss and texture can increase contrast for improved visibility.

Miscellaneous

Look for opportunities to add easily-molded features to simplify assembly and enhance product function such as aligning posts, nesting ribs, finger grips, guides, stops, stand-offs, hooks, clips, and access holes.

REDUCING MANUFACTURING COSTS

Although many factors contribute to costs of producing plastic parts, most costs fall into one of four basic categories: materials, overhead, labor, and scrap/rework. This section highlights potential methods for reducing these manufacturing costs. Carefully evaluate the effect each cost-reduction step may have on your product's performance and overall cost.

Materials

To reduce material costs, you must reduce material usage and obtain the best material value. Within the limits of good design and molding practice, consider some of the following:

- Core out unneeded thickness and wall stock;
- Use ribs, stiffening features, and supports to provide equivalent stiffness with less wall thickness;
- Optimize runner systems to minimize waste;
- Use standard colors, which are less expensive than custom colors;
- Compare the price of materials that meet your product requirements, but avoid making your selection based upon price alone; and
- Consider other issues such as material quality, lot-to-lot consistency, on-time delivery, and services offered by the supplier.

Figure 1-7 **Molded-In Illustrations**

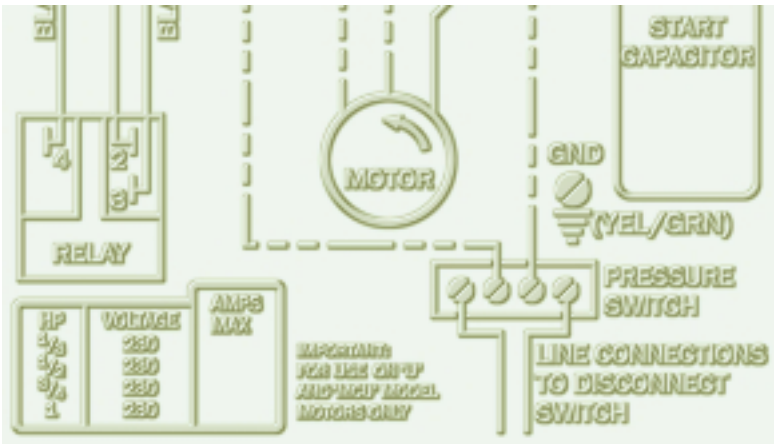

This molded in schematic is a cost effective alternative to labels or printing.

Overhead

Hourly press rates comprise a significant portion of part cost. The rate varies by region and increases with press size. Some options to consider when evaluating overhead costs include:

- Maximizing the number of parts produced per hour to reduce the machine overhead cost per part;
- Avoiding thick sections in your part and runner system that can increase cooling time;
- Designing your mold with good cooling and plenty of draft for easy ejection; and
- Increasing the number of cavities in a mold to increase hourly production.

This last option requires careful evaluation to determine if machine-cost-per-part savings compensate for the added mold cost.

Mold costs, usually amortized over a specified number of parts or years, can also make up a significant portion of part cost. This is particularly true if the production quantities are low. The complex relationship between mold cost, mold quality, and molding efficiency is covered in Chapter 7.

Labor

When looking to maintain or lower your labor costs, consider the following:

- Simplify or eliminate manual tasks as much as possible;
- Design parts and molds for automatic degating or place gates in areas that don't require careful trimming;
- Keep parting lines and mold kiss-off areas in good condition to avoid flash removal;
- Design parting lines and kiss-off points to orient flash in a less critical direction; and
- Streamline and/or automate time-consuming assembly steps.

Scrap and Rework

Part and mold design can contribute to quality problems and scrap. To avoid rework and minimize scrap generation, consider the following:

- Follow the part design recommendations and guidelines outlined in Chapter 2;
- Avoid specifying tighter tolerances than actually needed; and
- Adjust the mold steel to produce parts in the middle of the tolerance range, when molding parts with tight tolerances.

In the long run, this last suggestion is usually less expensive than trying to produce parts at the edge of the tolerance range by molding in a narrow processing window.

Do not select your mold maker based on price alone. Cheap molds often require costly rework and frequent mold maintenance, and are prone to part quality problems.

PROTOTYPE TESTING

Prototype testing allows you to test and optimize part design and material selection before investing in expensive production tooling. Good prototype testing duplicates molding, processing, and assembly conditions as closely as possible. Molded prototype parts can also be tested under the same range of mechanical, chemical, and environmental conditions that the production parts must endure.

Simplifying or eliminating prototype testing increases the chance of problems that could lead to delays and expensive modifications in production tooling. You should thoroughly prototype test all new designs.

GENERAL DESIGN

While engineering resins are used in many diverse and demanding applications, there are design elements that are common to most plastic parts, such as ribs, wall thickness, bosses, gussets, and draft. This chapter covers these general design issues, as well as others you should consider when designing parts made of thermoplastic resins.

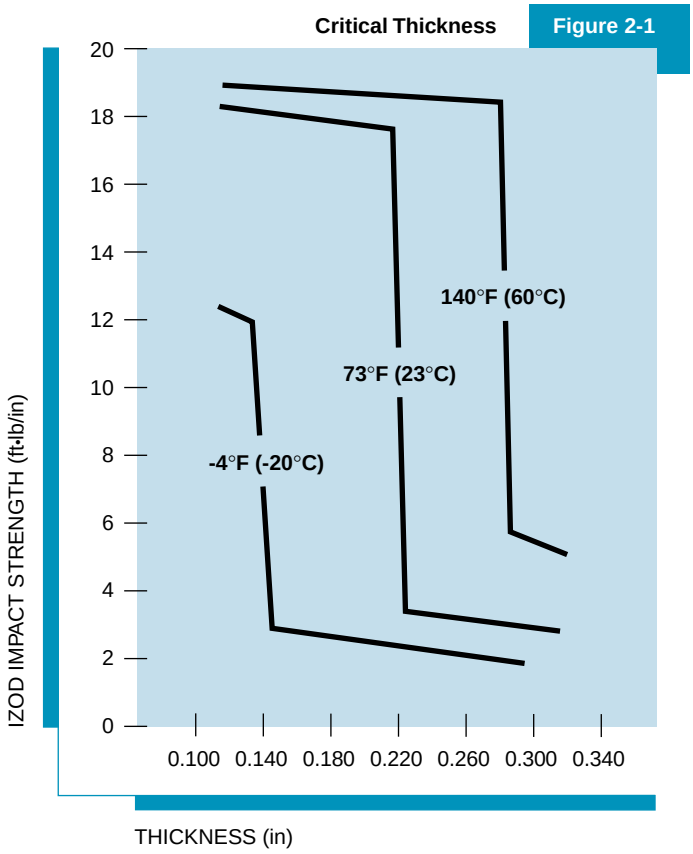

Izod impact strength of Makrolon polycarbonate vs. thickness at various temperatures.

WALL THICKNESS

Wall thickness strongly influences many key part characteristics, including mechanical performance and feel, cosmetic appearance, moldability, and economy. The optimum thickness is often a balance between opposing tendencies, such as strength versus weight reduction or durability versus cost. Give wall thickness careful consideration in the design stage to avoid expensive mold modifications and molding problems in production.

In simple, flat-wall sections, each 10% increase in wall thickness provides approximately a 33% increase in stiffness. Increasing wall thickness also adds to part weight, cycle times, and material cost. Consider using geometric features — such as ribs, curves, and corrugations — to stiffen parts. These features can add sufficient strength, with very little increase in weight, cycle time, or cost. For more information on designing for part stiffness, see Chapter 3.

Both geometric and material factors determine the effect of wall thickness on impact performance. Generally, increasing wall thickness reduces deflection during impact and increases the energy required to produce failure. In some cases, increasing wall thickness

can stiffen the part to the point that the geometry cannot flex and absorb the impact energy. The result can be a decrease in impact performance. Some materials, polycarbonate for example, lose impact strength if the thickness exceeds a limit known as the **critical thickness**. Above the critical thickness parts made of polycarbonate can show a marked decrease in impact performance. Walls with thickness greater than the critical thickness may undergo brittle, rather than ductile, failure during impact. The critical thickness reduces with lowering temperature and molecular weight. The critical thickness for medium-viscosity polycarbonate at room temperature is approximately 3/16 inch (see figure 2-1).

Consider moldability when selecting the wall thicknesses for your part. **Flow length** — the distance from the gate to the last area fill — must be within acceptable limits for the plastic resin chosen. Excessively thin walls may develop high molding stresses, cosmetic problems, and filling problems that could restrict the processing window. Conversely, overly thick walls can extend cycle times and create packing problems. Other points to consider when addressing wall thickness include:

- Avoid designs with thin areas surrounded by thick perimeter sections as they are prone to gas entrapment problems (see figure 2-2);
- Maintain uniform nominal wall thickness; and
- Avoid wall thickness variations that result in filling from thin to thick sections.

Thin-walled parts — those with main walls that are less than 1.5 mm thick — may require special high-performance molding equipment to achieve the required filling speeds and injection pressures. This can drive up the molding costs and offset any material savings. Thin-wall molding is generally more suited for size or weight reduction than for cost savings. Parts with wall thicknesses greater than 2 mm can also be considered as thin-walled parts if their flow-length-to-thickness ratios are too high for conventional molding.

Usually, low-shrinkage materials, such as most amorphous or filled resins, can tolerate nominal wall thickness variations up to about 25% without significant filling, warpage, or appearance problems. Unfilled crystalline resins, because of their high molding shrinkage,

Figure 2-2 **Racetracking**

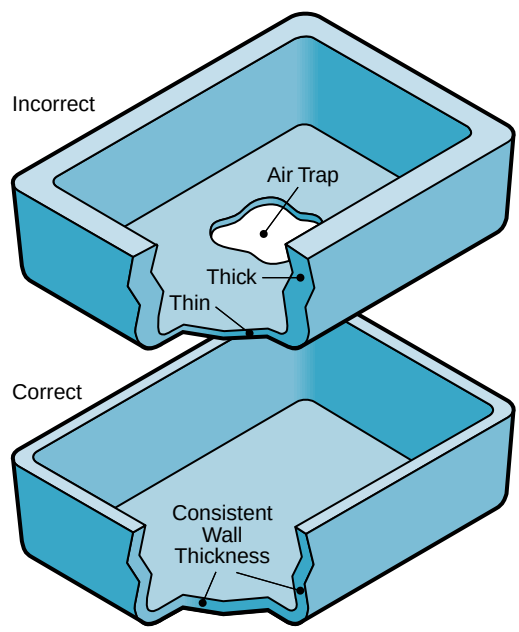

Non-uniform wall thickness can lead to air traps.

Coring **Figure 2-3**

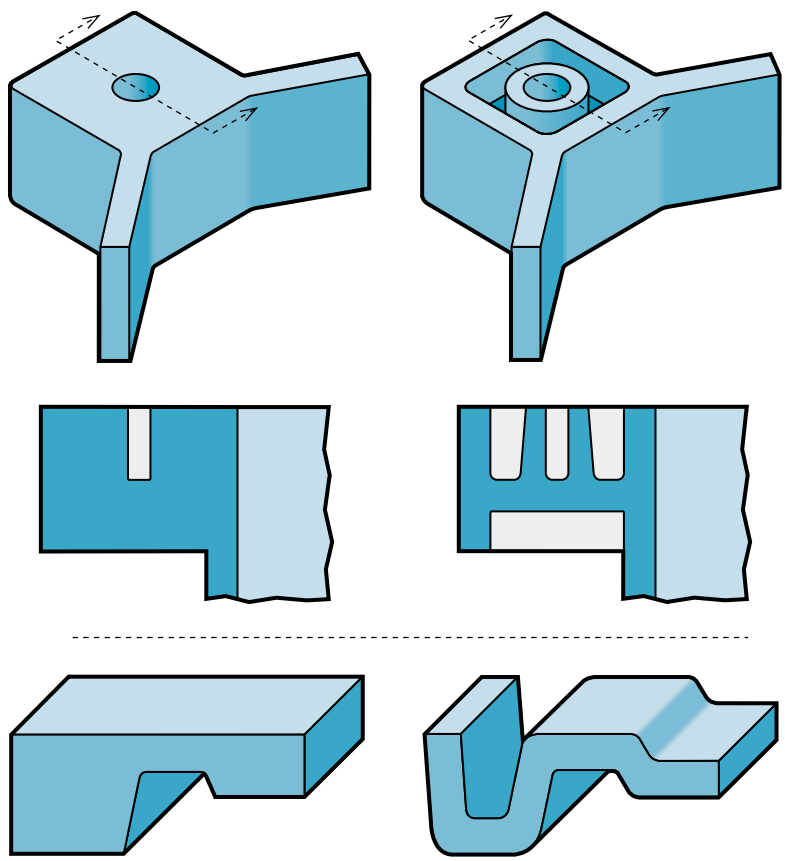

Core out thick sections as shown on right to maintain a more uniform wall thickness.

can only tolerate about half as much thickness variation. These guidelines pertain to the part's main walls. Ribs and other protrusions from the wall must be thinner to avoid sink. For more information about designing ribs and other protrusions, see the section on ribs in this chapter.

Many designs, especially those converted from cast metal to plastic, have thick sections that could cause sinks or voids. When adapting these designs to plastic parts, consider the following:

- Core or redesign thick areas to create a more uniform wall thickness (see figure 2-3);
- Make the outside radius one wall-thickness larger than the inside radius to maintain constant wall thickness through corners (see figure 2-4); and
- Round or taper thickness transitions to minimize read-through and possible blush or gloss differences (see figure 2-5). Blending also reduces the molded-in stresses and stress concentration associated with abrupt changes in thickness.

In some cases, thickness-dependent properties such as flame retardency, electrical resistance, and sound deadening determine the minimum required thickness. If your part requires these properties, be sure the material provides the needed performance at the thicknesses chosen. UL flammability ratings, for example, are listed with the minimum wall thickness for which the rating applies.

FLOW LEADERS AND RESTRICTORS

Occasionally designers incorporate thicker channels, called **flow leaders** or **internal runners**, into the part design. These flow leaders help mold filling or packing in areas far from the gate. Additionally, flow leaders can balance filling in non-symmetrical parts, alter the filling pattern, and reduce sink in thick sections (see figure 2-6). For best results, the flow-leader thickness should extend from the gate without restrictions.

To avoid possible warpage and shrinkage problems, limit the added thickness to no more than 25% of the nominal wall for low-shrinkage, amorphous or filled materials and to 15% for unfilled crystalline resins. Carefully transition the flow leader into the wall to minimize read-through and gloss differences on the other side of the wall.

Flow restrictors, areas of reduced thickness intended to modify the filling pattern, can alleviate air-entrapment problems (see figure 2-7) or move knitlines. When restricting thick flow channels as in figure 2-7, use the following rules of thumb in your design:

- Extend the restrictor across the entire channel profile to effectively redirect flow;

Figure 2-4 **Corner Design**

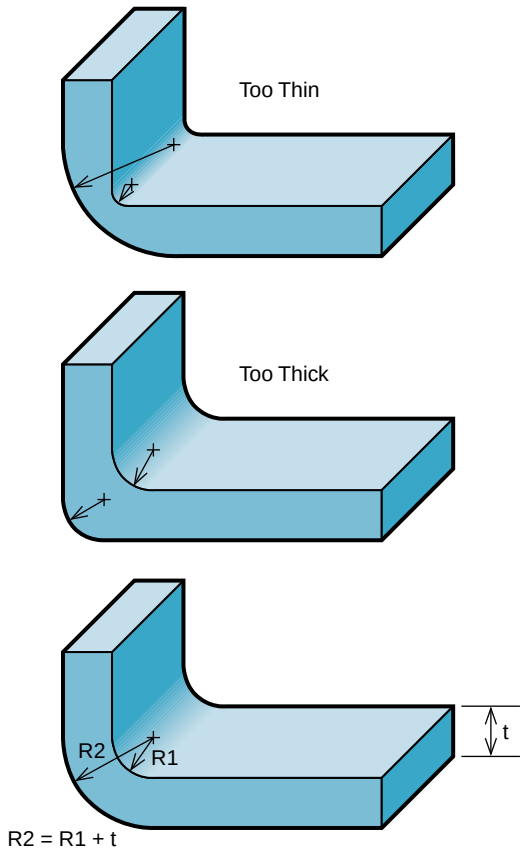

Internal and external corner radii should originate from the same point.

Figure 2-5 **Thickness Transitions**

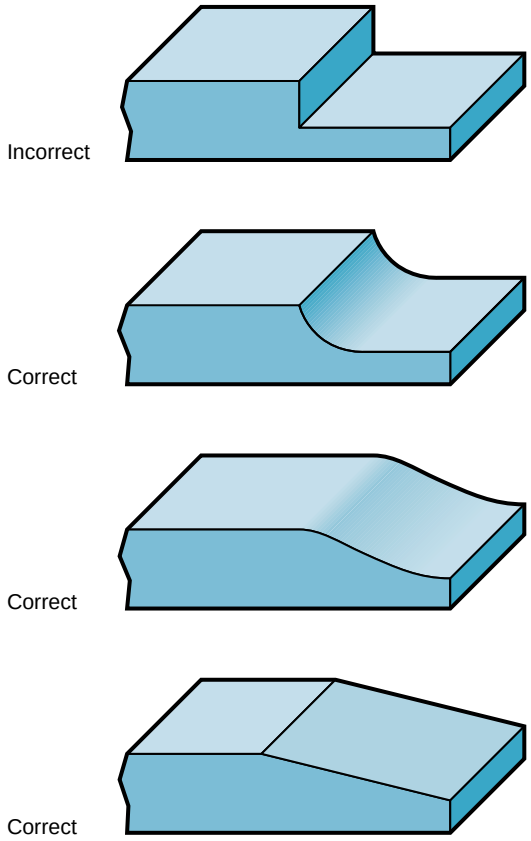

Blend transitions to minimize read-through.

Flow Leaders **Figure 2-6**

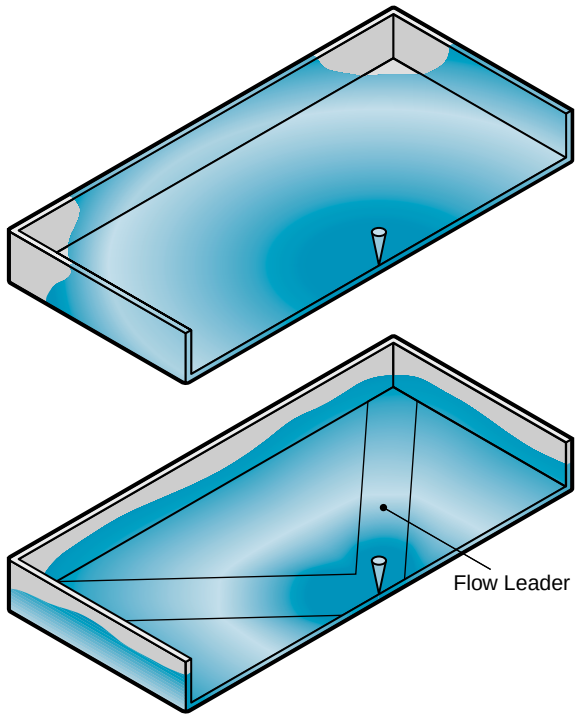

Corners typically fill late in box-shaped parts. Adding flow leaders balances flow to the part perimeter.

Flow Restrictors **Figure 2-7**

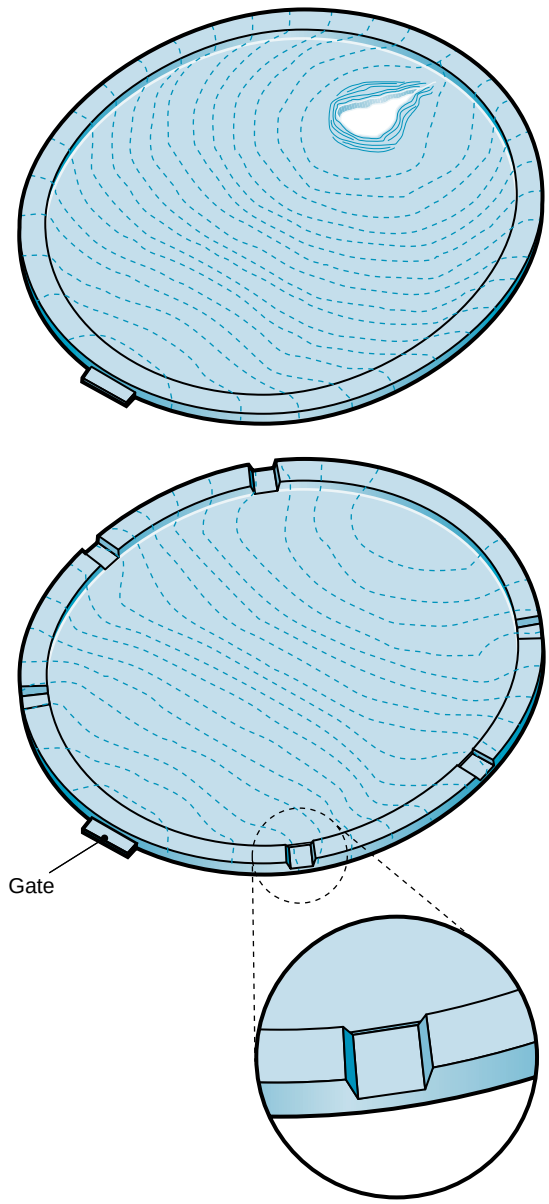

Flow restrictors can change the filling pattern to correct problems such as gas traps.

- Reduce the thickness by no more than 33% in high-shrinkage resins or 50% for low-shrinkage materials; and
- Lengthen the restrictor to decrease flow.

Flow leader and restrictor placement were traditionally determined by trial and error after the mold was sampled.

Today, computerized flow simulation enables designers to calculate the correct size and placement before mold construction.

RIBS

Ribs provide a means to economically augment stiffness and strength in molded parts without increasing overall wall thickness. Other uses for ribs include:

- Locating and captivating components of an assembly;
- Providing alignment in mating parts; and
- Acting as stops or guides for mechanisms.

This section deals with general guidelines for ribs and part design; structural considerations are covered in Chapter 3.

Rib Design

Proper **rib design** involves five main issues: thickness, height, location, quantity, and moldability. Consider these issues carefully when designing ribs.

Rib Thickness

Many factors go into determining the appropriate **rib thickness**. Thick ribs often cause sink and cosmetic problems on the opposite surface of the wall to which they are attached (see figure 2-8). The material, rib thickness, surface texture, color, proximity to a gate, and a variety of processing conditions determine the severity of sink. Table 2-1 gives common guidelines for rib thickness for a variety of materials. These guidelines are based upon subjective observations under common conditions

Figure 2-8 **Sink**

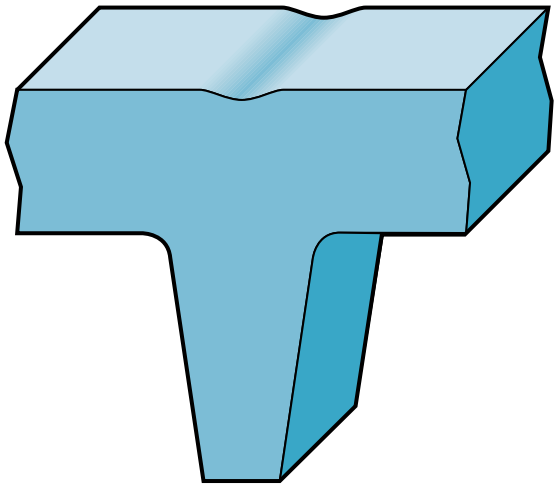

Sink opposite thick rib.

Figure 2-9 **Offset Rib**

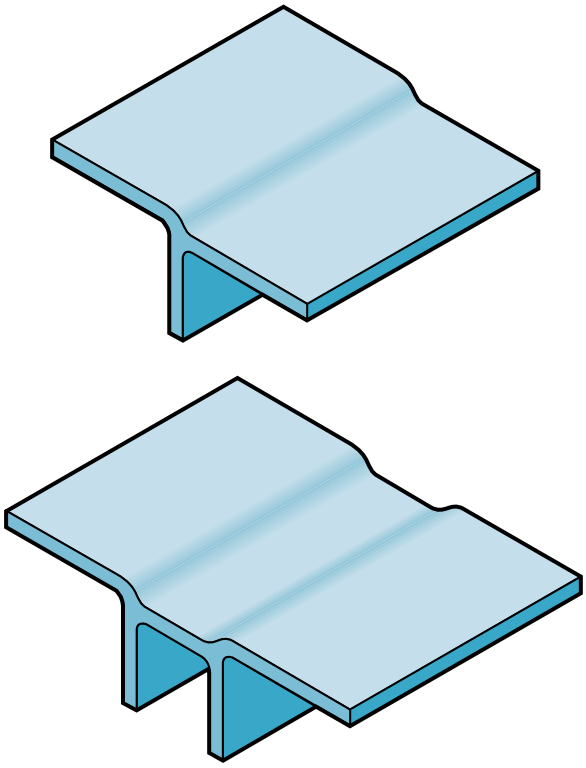

Offset rib to reduce read-through and sink.

Table 2-1 **Rib Thickness as a Percentage of Wall Thickness**

Resin	Minimal Sink	Slight Sink
PC	50% (40% if high gloss)	66%
ABS	40%	60%
PC/ABS	50%	66%
Polyamide (Unfilled)	30%	40%
Polyamide (Glass-Filled)	33%	50%
PBT Polyester (Unfilled)	30%	40%
PBT Polyester (Filled)	33%	50%

and pertain to the thickness at the base of the rib. Highly glossy, critical surfaces may require thinner ribs. Placing ribs opposite character marks or steps can hide rib read-through (see figure 2-9). Thin-walled parts — those with walls that are less than 1.5 mm — can often tolerate ribs that are thicker than the percentages in these guidelines. On parts with wall thicknesses that are 1.0 mm or less, the rib thickness should be equal to the wall thickness. Rib thickness also directly affects moldability. Very thin ribs can be difficult to fill. Because of **flow hesitation**, thin ribs near the gate can sometimes be more difficult to fill than those further away. Flow entering the thin ribs hesitates and freezes while the thicker wall sections fill.

Ribs usually project from the main wall in the mold-opening direction and are formed in blind holes in the mold steel. To facilitate part ejection from the mold, ribs generally require at least one-half degree of draft per side (see figure 2-10). More than one degree of draft per side can lead to excessive rib thickness reduction and filling problems in tall ribs.

Thick ribs form thickened flow channels where they intersect the base wall. These channels can enhance flow in the rib direction and alter the filling pattern. The base of thick ribs is often a good location for gas channels in **gas-assist molding** applications. The gas-assist process takes advantage of these channels for filling, and hollows the channels with injected gas to avoid problems with sink, voids, or excessive shrinkage.

Rib thickness also determines the cooling rate and degree of shrinkage in ribs, which in turn affects overall part warpage. In materials with nearly uniform shrinkage in the flow and cross-flow directions, thinner ribs tend to solidify earlier and shrink less than the base wall. In this situation, the ends of ribbed surfaces may warp toward the

Rib Design Guidelines **Figure 2-10**

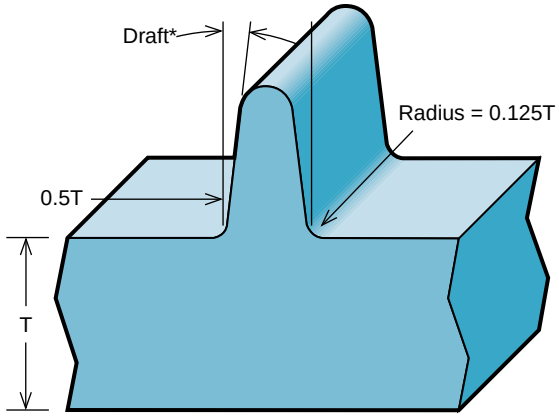

*Minimum 0.5° Per Side

Rib design guidelines.

Figure 2-11 **Warpage vs. Rib Thickness**

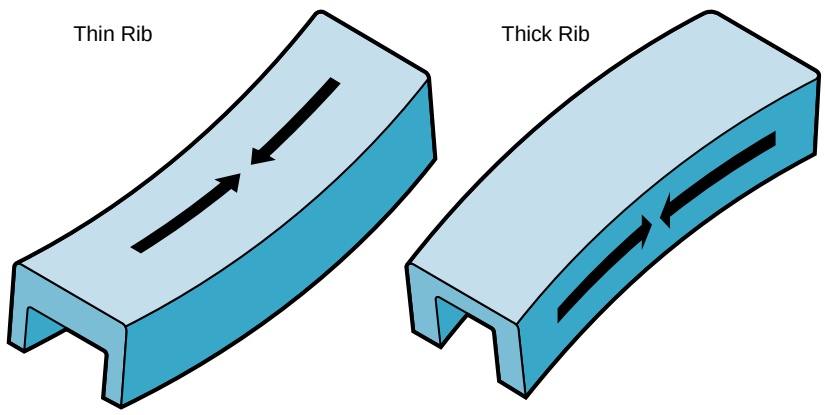

Warpage vs. rib thickness in unfilled resins.

opposing wall (see figure 2-11). As rib thickness approaches the wall thickness, this type of warpage generally decreases. However, ribs that are the same thickness as the wall may develop ends that warp toward the ribbed side. To prevent this warpage, design extra mold cooling on the ribbed side to compensate for the added heat load from the ribs.

For glass-filled materials with higher shrinkage in the cross-flow versus flow direction, the effect of rib thickness on warpage can be quite different (see figure 2-12). Because thin ribs tend to fill from the base up, rather than along their length, high cross-flow shrinkage over the length of the rib can cause the ends to warp toward the ribs. As rib thickness increases and the flow direction becomes more aligned along the length of the ribs, this effect diminishes. Warpage can reverse as the ribs become thicker than the wall.

Rib Size

Generally, taller ribs provide greater support. To avoid mold filling, venting, and ejection problems, standard rules of thumb limit rib height to approximately three times the rib-base thickness. Because of the required draft for ejection, the tops of tall ribs may become too thin to fill easily. Additionally, very tall ribs are prone to buckling under load. If you encounter one of these conditions, consider designing two or more shorter, thinner ribs to provide the same support with improved moldability (see figure 2-13). Maintain enough space between ribs for adequate mold cooling: for short ribs allow at least two times the wall thickness.

Figure 2-12 **Warpage vs. Rib Thickness**

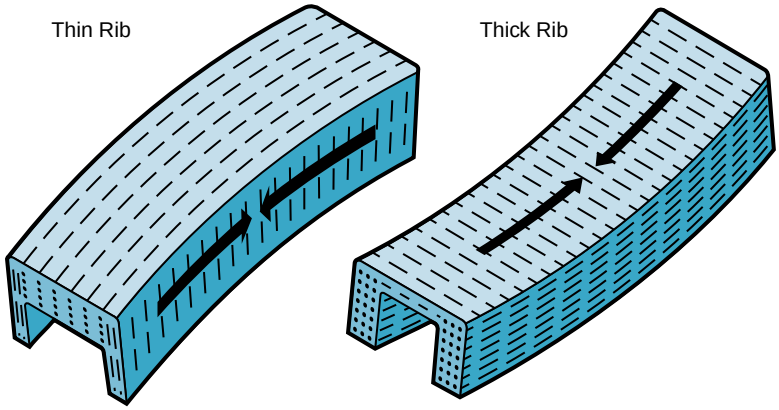

Warpage vs. rib thickness in glass-filled resins.

Multiple Ribs **Figure 2-13**

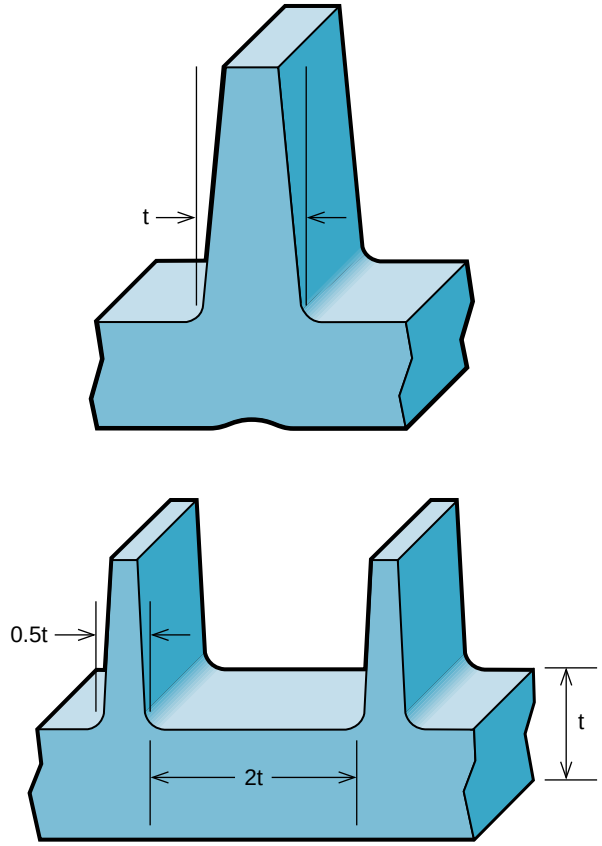

Replace large problematic ribs with multiple shorter ribs.

Boss Design **Figure 2-14**

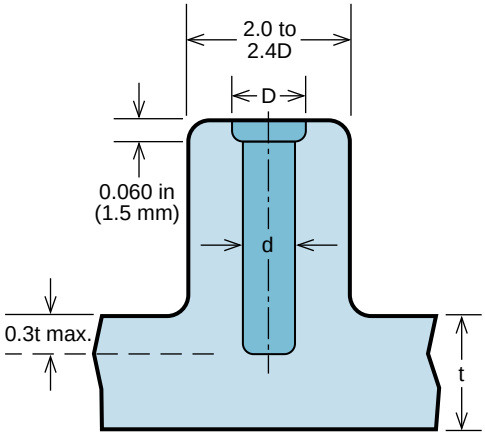

Typical boss design.

Rib Location and Numbers

Carefully consider the location and quantity of ribs to avoid worsening problems the ribs were intended to correct. For example, ribs added to increase part strength and prevent breakage might actually reduce the ability of the part to absorb impacts without failure. Likewise, a grid of ribs added to ensure part flatness may lead to mold-cooling difficulties and warpage. Typically much easier to add than remove, ribs should be applied sparingly in the original design and added as needed to fine tune performance.

BOSSES

Bosses find use in many part designs as points for attachment and assembly. The most common variety consists of cylindrical projections with holes designed to receive screws, threaded inserts, or other types of fastening hardware. As a rule of thumb, the outside diameter of bosses should remain within 2.0 to 2.4 times the outside diameter of the screw or insert (see figure 2-14).

Boss Sink Recess **Figure 2-15**

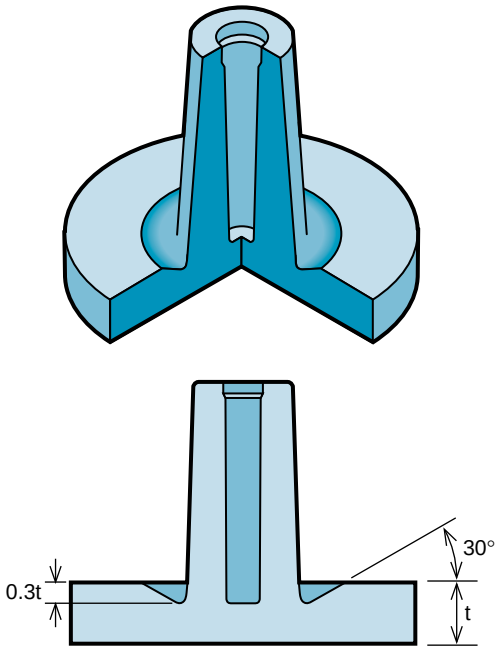

A recess around the base of a thick boss reduces sink.

Bosses **Figure 2-16**

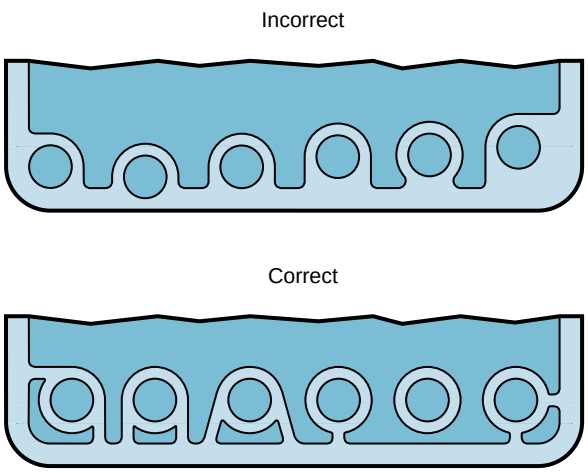

Connecting bosses to walls.

To limit sink on the surface opposite the boss, keep the ratio of boss-wall thickness to nominal-wall thickness the same as the guidelines for rib thickness (see table 2-1). To reduce stress concentration and potential breakage, bosses should have a blended radius, rather than a sharp edge, at their base. Larger radii minimize stress concentration but increase the chance of sink or voids.

- For most applications, a 0.015-inch blend (fillet) radius provides a good compromise between strength and appearance.

Specifying smaller screws or inserts often prevents overly thick bosses. Small screws attain surprisingly high retention forces (see the Bayer Joining Techniques manual). If the boss-wall thickness must exceed the recommended ratio, consider adding a recess around the base of the boss (as shown in figure 2-15) to reduce the severity of sink.

Avoid bosses that merge into sidewalls because they can form thick sections that lead to sink. Instead, position the bosses away from the sidewall, and if needed, use connecting ribs for support (see figure 2-16). Consider using open-boss designs for bosses near a standing wall (see figure 2-17).

Normally, the boss hole should extend to the base-wall level, even if the full depth is not needed for assembly. Shallower holes can leave thick sections, resulting in sink or voids. Deeper holes reduce the base wall thickness, leading to filling problems, knitlines, or surface blemishes. The goal is to maintain a uniform thickness in the attachment wall (see figure 2-18).

Because of the required draft, tall bosses — those greater than five times their outside diameter — can create a filling problem at their top or a thick section at their base. Additionally, the

Boss in Attachment Wall **Figure 2-17**

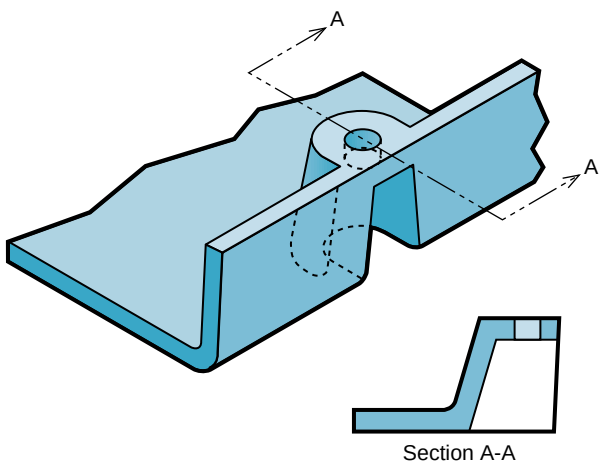

Open bosses maintain uniform thickness in the attachment wall.

Boss Core Depth **Figure 2-18**

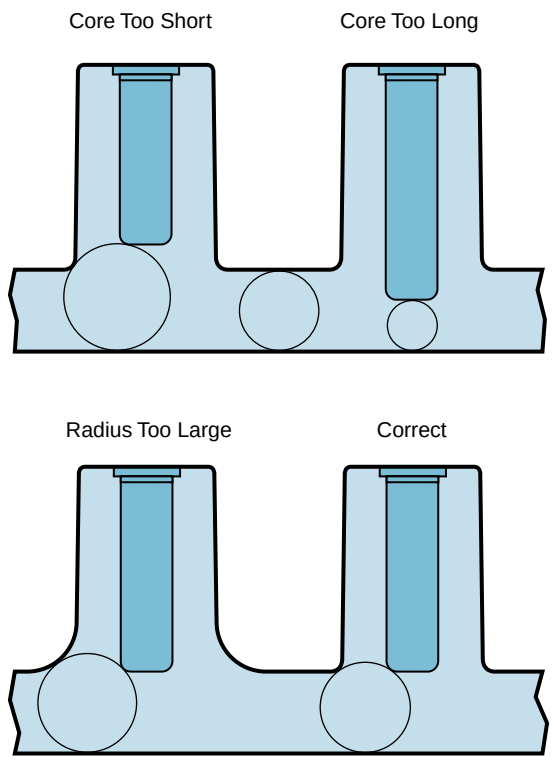

Boss holes should extend to the base-wall level.

cores in tall bosses can be difficult to cool and support. Consider coring a tall boss from two sides or extending tall gussets to the standoff height rather than the whole boss (see figure 2-19).

Long-Core Alternatives **Figure 2-19**

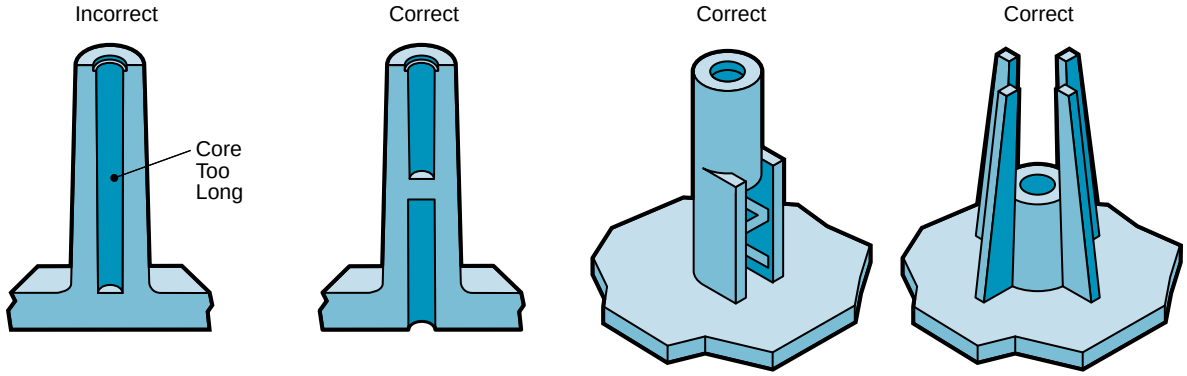

Options to reduce the length of excessively long core pins.

Other alternatives include splitting a long boss into two shorter mating bosses (see figure 2-20) or repositioning the boss to a location where it can be shorter.

GUSSETS

Gussets are rib-like features that add support to structures such as bosses, ribs, and walls (see figure 2-21). As with ribs, limit gusset thickness to one-half to two-thirds the thickness of the walls to which they are attached if sink is a concern. Because of their shape and the EDM process for burning gussets into the mold, gussets are prone to ejection problems. Specify proper draft and draw polishing to help with mold release.

The location of gussets in the mold steel generally prevents practical direct venting. Avoid designing gussets that could trap gasses and cause filling and packing problems. Adjust the shape or thickness to push gasses out of the gussets and to areas that are more easily vented (see figure 2-21).

SHARP CORNERS

Avoid **sharp corners** in your design. Sharp inside corners concentrate stresses from mechanical loading, substantially reducing mechanical performance. Figure 2-22 shows the effect of root radius on stress concentration in a simple, cantilevered snap arm. The stress concentration factor climbs sharply as the radius-to-thickness ratio drops below approximately 0.2. Conversely, large ratios cause thick sections, leading to sinks or voids.

Figure 2-20 **Mating Bosses**

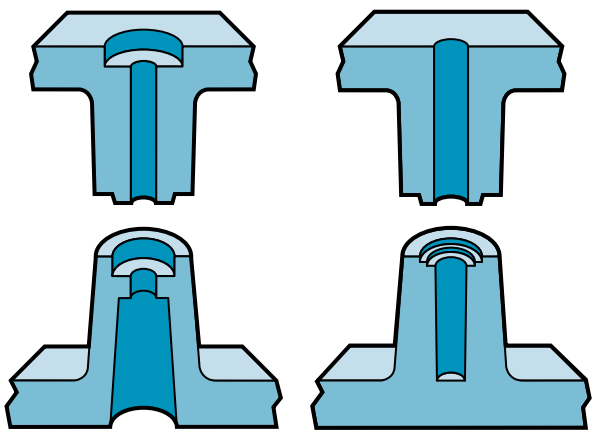

Excessively long bosses can often be replaced by two shorter bosses.

Figure 2-21 **Gussets**

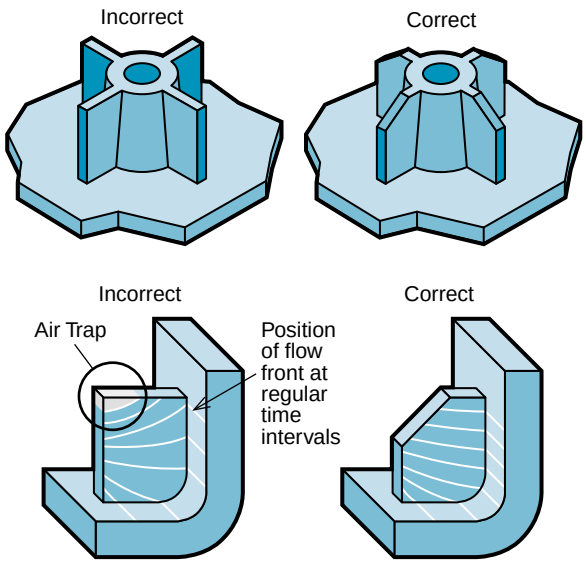

Contour lines show flow front position at incremental time intervals. Squared gussets can trap air in the corners.

- A **radius-to-thickness ratio** of approximately 0.15 provides a good compromise between performance and appearance for most applications subjected to light to moderate impact loads.

Initially use a minimal corner radius when designing parts made of high-shrinkage materials with low-notch sensitivity, such as Durethan polyamide, to prevent sink and read-through. Inside corner radii can then be increased as needed based upon prototype testing.

In critical areas, corner radii should appear as a range, rather than a maximum allowable value, on the product drawings. A maximum value allows the mold maker to leave corners sharp as machined with less than a 0.005-inch radius. Avoid universal radius specifications that round edges needlessly and increase mold cost (see figure 2-23).

In addition to reducing mechanical performance, sharp corners can cause high, localized shear rates, resulting in material damage, high molding stresses, and possible cosmetic defects.

Fillet Radius and Stress Concentration **Figure 2-22**

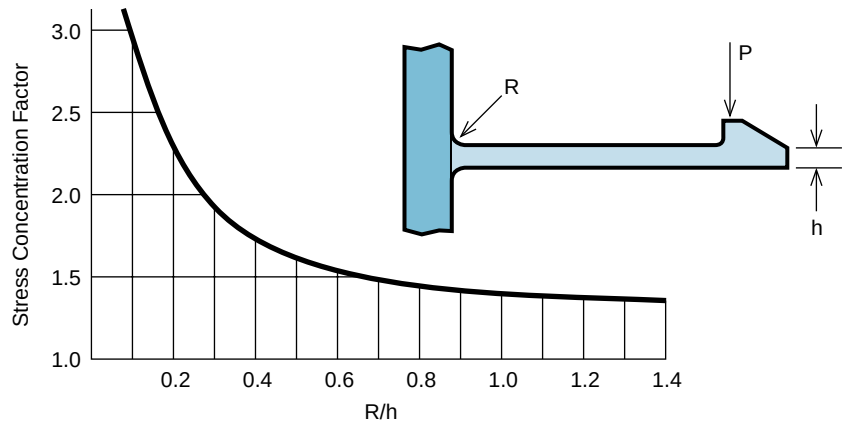

Effects of a fillet radius on stress concentration.

Round Edges **Figure 2-23**

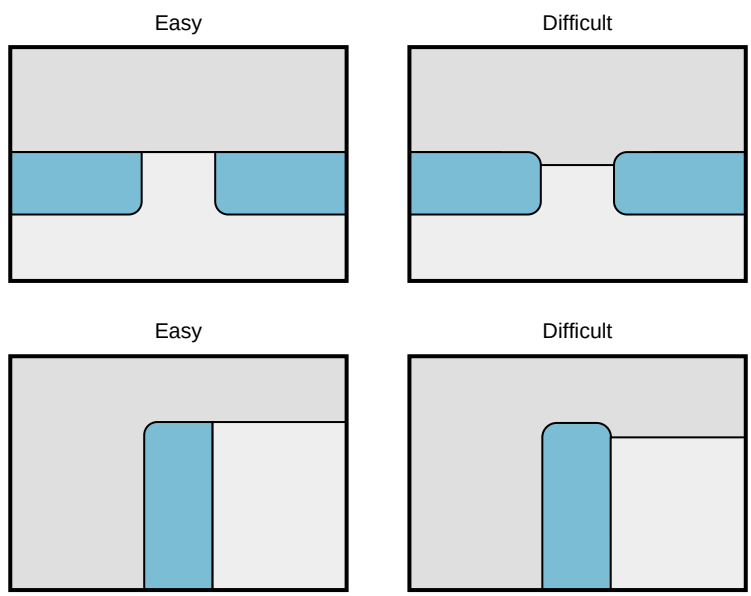

Avoid universal radius specifications that round edges needlessly and increase mold cost.

DRAFT

Draft — providing angles or tapers on product features such as walls, ribs, posts, and bosses that lie parallel to the direction of release from the mold — eases part ejection. Figure 2-24 shows common draft guidelines.

How a specific feature is formed in the mold determines the type of draft needed. Features formed by blind holes or pockets — such as most bosses, ribs, and posts — should taper thinner as they extend into the mold. Surfaces formed by slides may not need draft if the steel separates from the surface before ejection. Other rules of thumb for designing draft include:

- Draft all surfaces parallel to the direction of steel separation;
- Angle walls and other features that are formed in both mold halves to facilitate ejection and maintain uniform wall thickness;
- Use the standard one degree of draft plus one additional degree of draft for every 0.001 inch of texture depth as a rule of thumb; and
- Use a draft angle of at least one-half degree for most materials. Design permitting, use one degree of draft for easy part ejection. SAN resins typically require one to two degrees of draft.

Figure 2-24 **Draft**

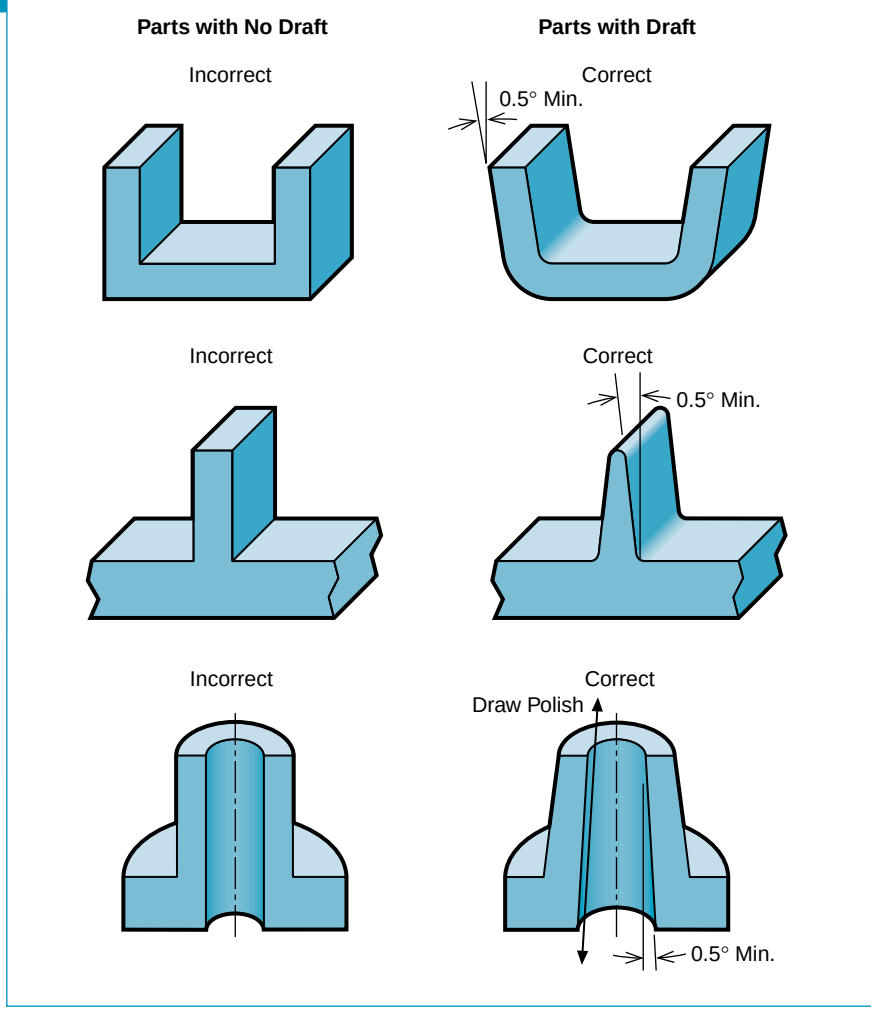

Common draft guidelines.

Less draft increases the chance of damaging the part during ejection. Additionally, molders may have to apply mold release or special mold surface coatings or treatments, ultimately leading to longer cycle times and higher part costs.

The mold finish, resin, part geometry, and mold ejection system determine the amount of draft needed. Generally, polished mold surfaces require less draft than surfaces with machined finishes. An exception is thermoplastic polyurethane resin, which tends to eject easier from frosted mold surfaces. Parts with many cores may need a higher amount of draft.

Figure 2-25 **Interlocking Cores**

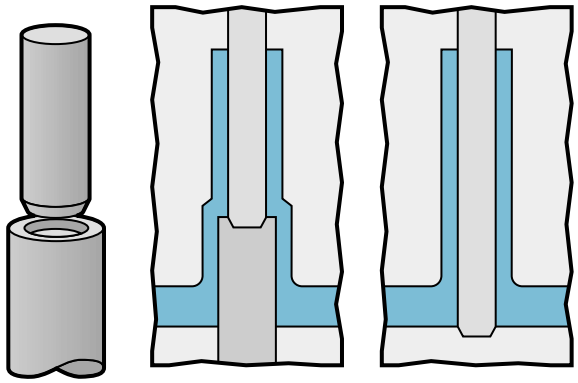

The ends of the long cores should interlock into mating surfaces for support.

Figure 2-26 **Core Mismatch**

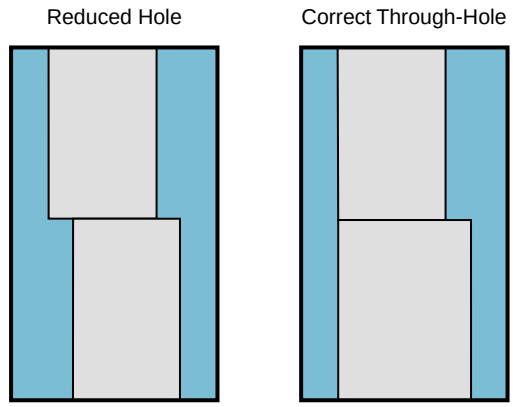

When feasible, make one core larger to accommodate mismatch in the mold.

Some part designs leave little room for ejector pins. Parts with little ejector-pin contact area often need extra draft to prevent distortion during ejection. In addition to a generous draft, some deep closed-bottomed shapes may need air valves at the top of the core to relieve the vacuum that forms during ejection (See figure 7-13 in Chapter 7).

HOLES AND CORES

Cores are the protruding parts of the mold that form the inside surfaces of features such as holes, pockets, and recesses. Cores also remove plastic from thick areas to maintain a uniform wall thickness. Whenever possible, design parts so that the cores can separate from the part in the mold-opening direction. Otherwise, you may have to add slides or hydraulic moving cores that can increase the cost of mold construction and maintenance (see section on undercuts).

During mold filling, the advancing plastic flow can exert very high side forces on tall cores forming deep or long holes. These forces can push or bend the cores out of position, altering the molded part. Under severe conditions, this bending can fatigue the mold steel and break the core.

Generally, the **depth-to-diameter ratio** for blind holes should not exceed 3:1. Ratios up to 5:1 are feasible if filling progresses symmetrically around the unsupported hole core or if the core is in an area of slow-moving flow. Consider alternative part designs that avoid the need for long delicate cores, such as the alternative boss designs in figures 2-19 and 2-20.

If the core is supported on both ends, the guidelines for length-to-diameter ratio double: typically 6:1 but up to 10:1 if the filling around the core is symmetrical. The level of support on the core ends determines the maximum suggested ratio (see figure 2-25). Properly interlocked cores typically resist deflection better than cores that simply kiss off. Single cores for through-holes can interlock into the opposite mold half for support.

Mismatch can reduce the size of the opening in holes formed by mating cores. Design permitting, make one core slightly larger (see figure 2-26). Even

with some mismatch, the required hole diameter can be maintained. Tight-tolerance holes that cannot be stepped may require interlocking features on the cores to correct for minor misalignment. These features add to mold construction and maintenance costs. On short through-holes that can be molded with one core, round the edge on just one side of hole to eliminate a mating core and avoid mismatch (see figure 2-27).

UNDERCUTS

Some design features, because of their orientation, place portions of the mold in the way of the ejecting plastic part. Called "**undercuts,**" these elements can be difficult to redesign. Sometimes, the part can flex enough to strip from the mold during ejection, depending upon the undercut's depth and shape and the resin's flexibility. Undercuts can only be stripped if they are located away from stiffening features such as corners and ribs. In addition, the part must have room to flex and deform. Generally, guidelines for stripping undercuts from round features limit the maximum amount of the undercut to a percentage defined as follows and illustrated in figure 2-28 as:

$$\% \text{ Undercut} = \frac{D - d}{D} \times 100$$

Generally, avoid stripping undercuts in parts made of stiff resins such as polycarbonate, polycarbonate blends, and reinforced grades of polyamide 6. Undercuts up to 2% are possible in parts made of these resins, if the walls are flexible and the leading edges are rounded or angled for easy ejection. Typically, parts made of flexible resins, such as unfilled polyamide 6 or thermoplastic polyurethane elastomer, can tolerate 5% undercuts. Under ideal conditions, they may tolerate up to 10% undercuts.

Slides and Cores

Most undercuts cannot strip from the mold, needing an additional mechanism in the mold to move certain components prior to ejection (see Chapter 7). The types of mechanisms include slides,

Mismatch **Figure 2-27**

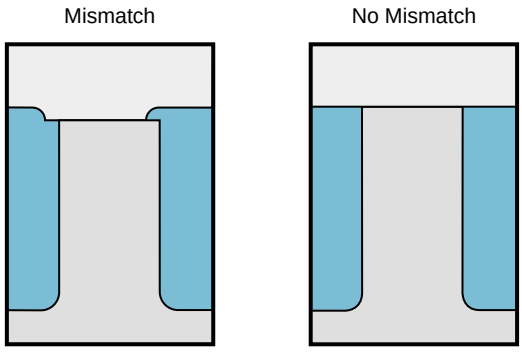

Rounding both edges of the hole creates a potential for mismatch.

Stripping Undercut Guidelines **Figure 2-28**

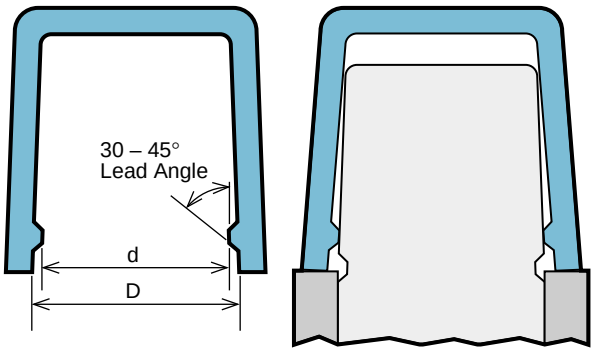

Undercut features can often successfully strip from the mold during ejection if the undercut percentage is within the guidelines for the material type.

Sidewall Windows **Figure 2-29**

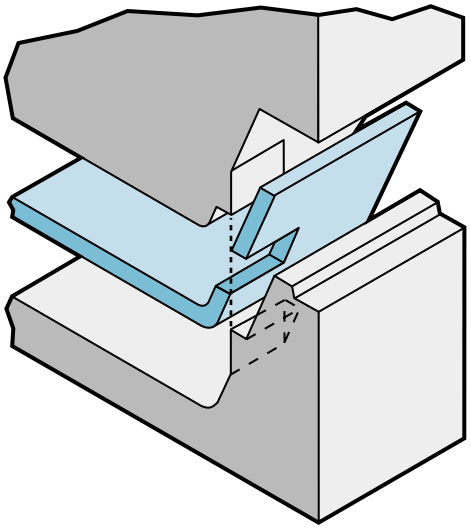

Bypass steel can form windows in sidewalls without moving slides.

Snap Fit **Figure 2-30**

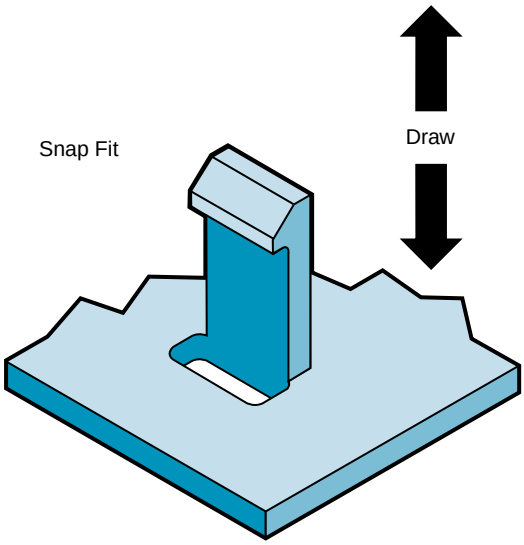

Snap-fit hook molded through hole to form undercut.

Wire Guides **Figure 2-31**

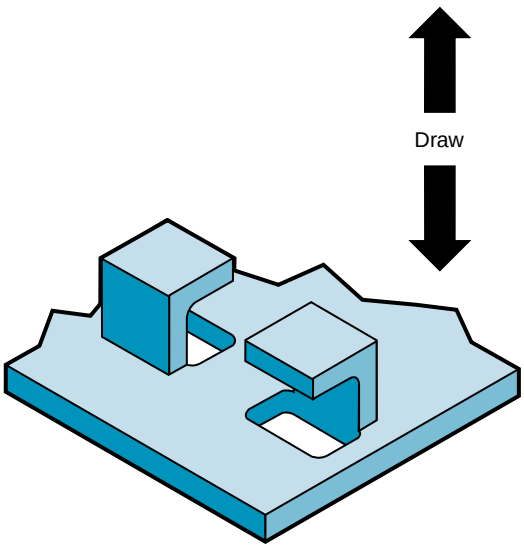

Simple wire guides can be molded with bypass steel in the mold.

split cores, collapsible cores, split cavities, and core pulls. Cams, cam pins, lifters, or springs activate most of these as the mold opens. Others use external devices such as hydraulic or pneumatic cylinders to generate movement. All of these mechanisms add to mold cost and complexity, as well as maintenance. They also add hidden costs in the form of increased production scrap, quality problems, flash removal, and increased mold downtime.

Clever part design or minor design concessions often can eliminate complex mechanisms for undercuts. Various design solutions for this problem are illustrated in figures 2-29 through 2-31. Get input from your mold designer early in product design to help identify options and reduce mold complexity.

LOUVERS AND VENTS

Minor variations in **cooling-vent design** can have a major impact on the molding costs. For instance, molds designed with numerous, angled kiss-offs of bypass cores are expensive to construct and maintain. Additionally, these molds are susceptible to damage and flash problems. Using moving slides or cores to form vents adds to mold cost and complexity.

Carefully consider the molding process during part design to simplify the mold and lower molding costs. Extending vents over the top of a corner edge can facilitate straight draw of the vent coring and eliminate a side action in the mold (see figure 2-32). Angling the louver surface can also allow vent slots to be molded without side actions in the mold (see figure 2-33).

Consult all pertinent agency specifications for cooling vents in electrical devices. Vent designs respond differently to the flame and safety tests required by many electrical devices. Fully test all cooling-vent designs for compliance.

Figure 2-32 **Vent Slots**

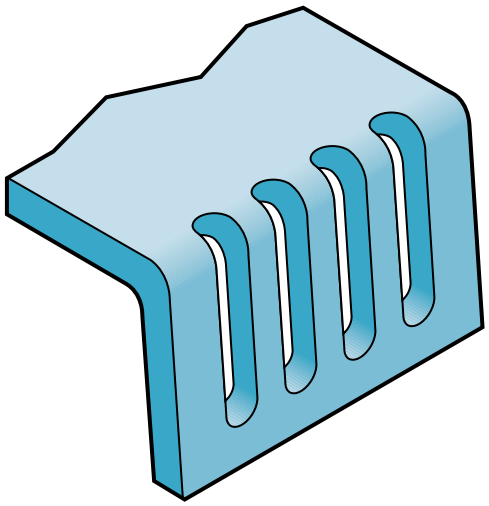

Extending vent slots over the corner edge eliminates the need for a side action in the mold.

Figure 2-33 **Louvers on Sloping Wall**

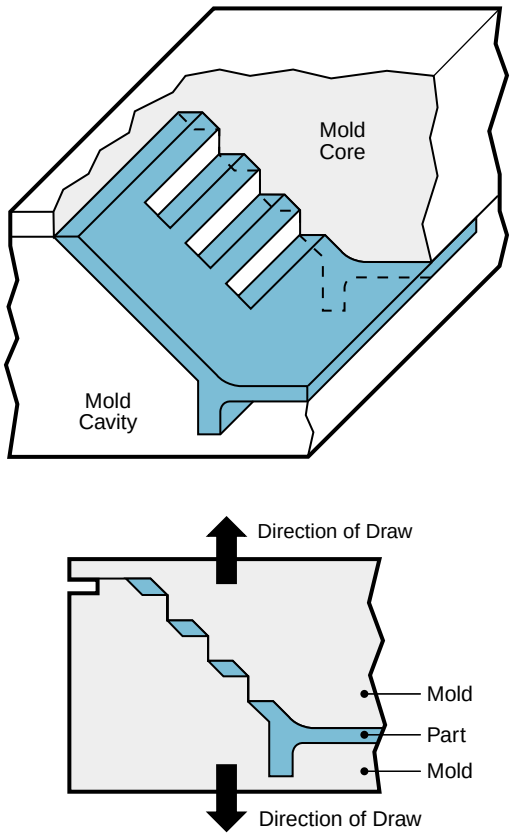

Louvers on sloping walls can be molded in the direction of draw.

Thread Profiles **Figure 2-34**

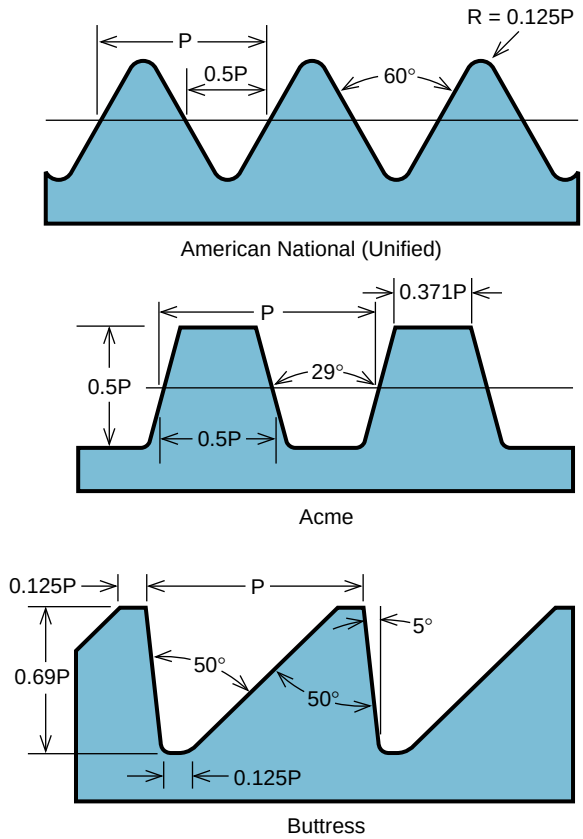

Common thread profiles used in plastic parts.

MOLDED-IN THREADS

The molding process accommodates thread forming directly in a part, avoiding the expense of secondary, thread-cutting steps. The cost and complexity of the tooling usually determines the feasibility of molding threads. Always compare this cost to the cost of alternative attachment options, such as self-tapping screws.

Easily molded in both mold halves, **external threads** centered on the mold parting line add little to the molding cost. Typically, threads that do not lie on the parting line require slides or side actions that could add to molding costs. All threads molded in two halves are prone to parting line flash or mismatch.

Thread designs requiring unscrewing devices add the most cost to the mold. Most of the mechanisms for molding **internal threads** — such as collapsible and unscrewing cores — significantly increase the mold's cost and complexity.

Occasionally, threads in parts made of flexible plastics, such as unfilled polyamide 6 or polyurethane elastomers, can be stripped from the mold without special mechanisms. Rarely suited to filled resins or stiff plastics such as polycarbonate, this option usually requires generously rounded threads and a diameter-to-wall-thickness ratio greater than 20 to 1. Usually, molding threads on removable cores reduces mold cost and complexity but adds substantially to the costs of molding and secondary operations. For this reason, limit this option to low-production quantities or designs that would be prohibitively complex to mold otherwise.

Thread profiles for metal screws often have sharp edges and corners that can reduce the part's mechanical performance and create molding problems in plastic designs. Rounding the thread's crests and roots lessens these effects. Figure 2-34 shows common thread profiles used in plastics. Although less common than the American National (Unified) thread, Acme and Buttress threads generally work better in plastic assemblies. Consider the following when specifying **molded-in threads**:

- Use the maximum allowable radius at the thread's crest and root;
- Stop threads short of the end to avoid making thin, feathered threads that can easily cross-thread (see figure 2-35);
- Limit thread pitch to no more than 32 threads per inch for ease of molding and protection from cross threading; and
- Avoid tapered threads unless you can provide a positive stop that limits hoop stresses to safe limits for the material.

Tapered pipe threads, common in plumbing for fluid-tight connections, are slightly conical and tapered and can place excessive hoop stresses on the internal threads of a plastic part. When mating plastic and metal tapered threads, design the external threads on the plastic component to avoid hoop stress in plastic or use straight threads and an "O" ring to produce the seal (see figure 2-36). Also, assure that any thread dopes or thread lockers are compatible with your selected plastic resin. Polycarbonate resins, in particular, are susceptible to chemical attack from many of these compounds.

Figure 2-35 **Threads**

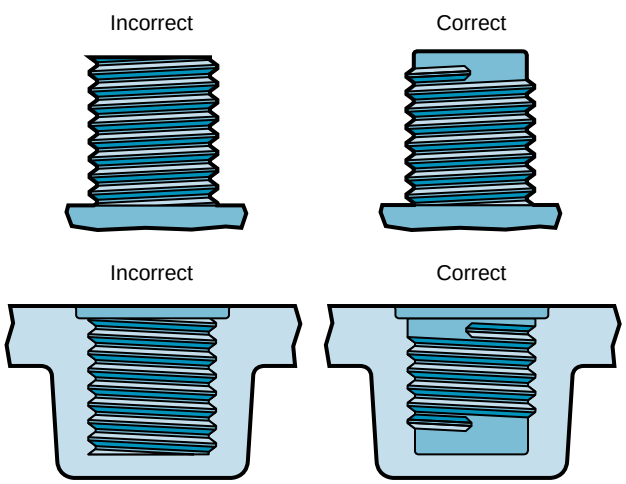

Design guidelines to avoid cross threading.

Figure 2-36 **Pipe Threads**

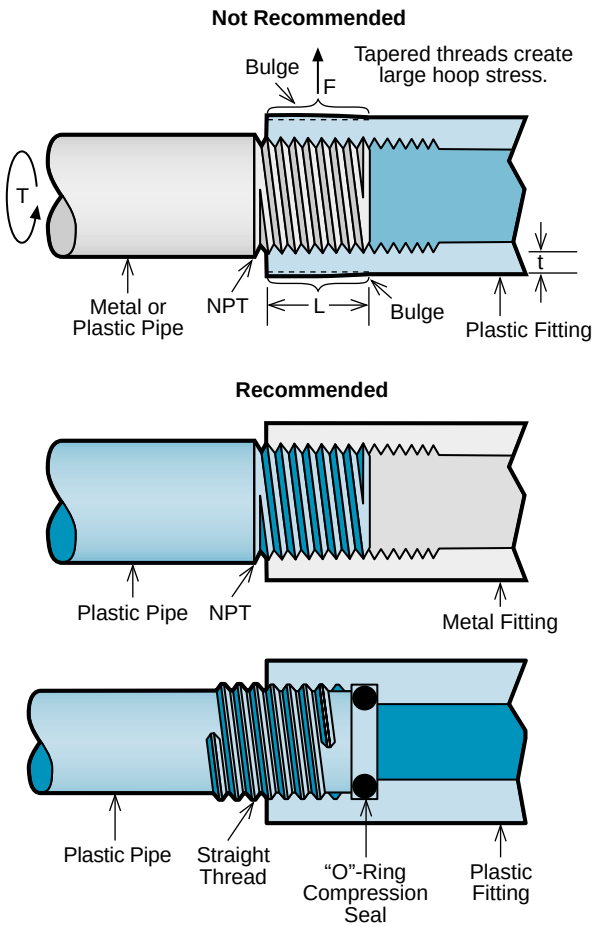

Standard NPT tapered pipe threads can cause excessive hoop stresses in the plastic fitting.

Medical Connectors **Figure 2-37**

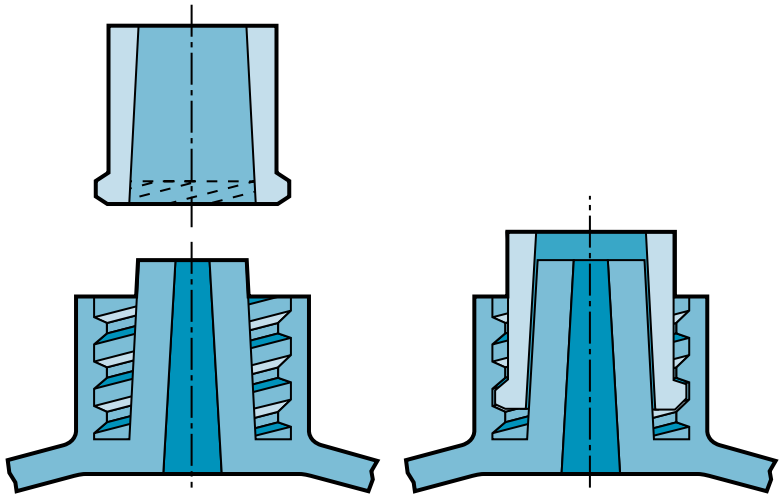

Luer-lock thread used in medical applications.

For best performance, use threads designed specifically for plastics. Parts that do not have to mate with standard metal threads can have unique threads that meet the specific application and material requirements. The medical industry, for example, has developed special, plastic-thread designs for Luer-lock tubing connectors (see figure 2-37). Thread designs can also be simplified for ease of molding as shown in figure 2-38.

Figure 2-38 **Molded Threads**

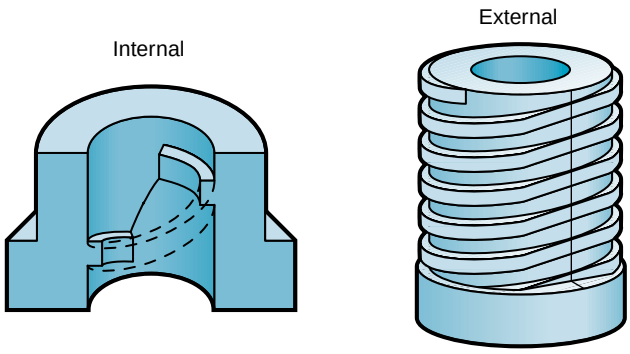

Examples of thread designs that were modified for ease of molding.

LETTERING

The molding process adapts easily for molding-in logos, labels, warnings, diagrams, and instructions, saving the expense of stick-on or painted labels, and enhancing recyclability. Deep, sharp **lettering** is prone to cosmetic problems, such as streaks and tear drops, particularly when near the gate (see figure 2-39). To address these cosmetic issues, consider the following:

- Limit the depth or height of lettering into or out of the part surface to approximately 0.010 inch; and
- Angle or round the side walls of the letters as shown in figure 2-40.

Figure 2-39 **Lettering**

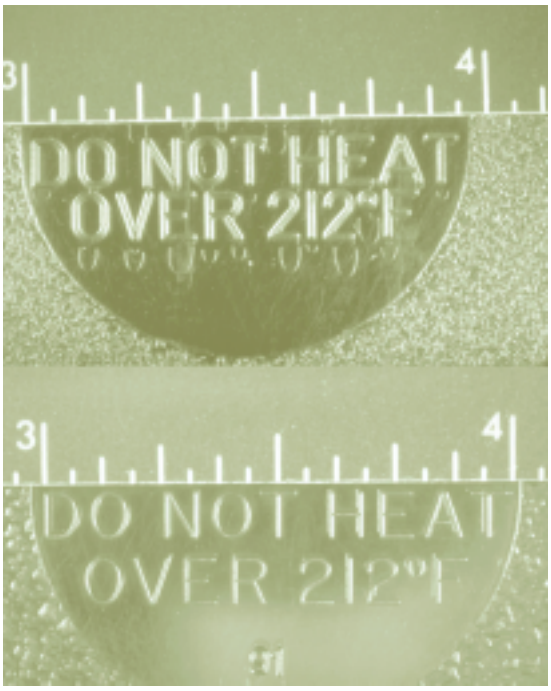

Deep, sharp lettering can cause teardrop defects as shown on top photo. The bottom shows the improvement with rounded, shallow lettering.

TOLERANCES

Many variables contribute to the dimensional stability and achievable **tolerances** in molded parts, including processing variability, mold construction, material characteristics, and part geometry. To improve your ability to maintain specified tolerances in production:

Figure 2-40 **Lettering**

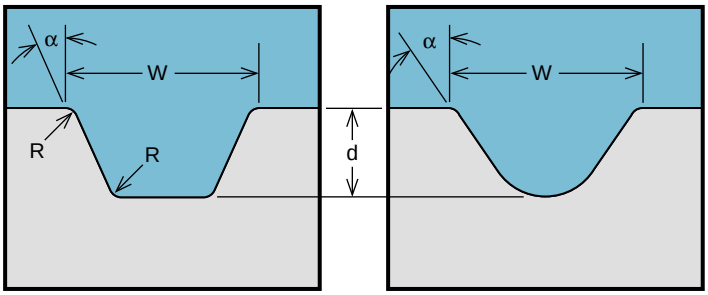

$\alpha \geq 30°$ $W \geq 2 \cdot d$ $d = 0.010$ in (Max.)

Design suggestions for the cross-sectional profile of lettering.

- Use low-shrinkage materials in parts with tight tolerances;
- Avoid tight tolerances in dimensions affected by the alignment of the mold halves or moving mold components such as slides;
- Design parts and assemblies to avoid tight tolerances in areas prone to warpage or distortion; and
- Adjust the mold to produce dimensions in the middle of tolerance range at optimum processing conditions for the material.

To avoid unnecessary molding costs, specify tight tolerances only when needed. Generally, the size and variability of other part features determine the actual tolerance required for any one component or feature within an assembly. Rather than dividing the allowable variability equally over the various features that govern fit and function, allot a greater portion of the total tolerance range to features that are difficult to control. Reserve tight tolerances for features that can accommodate them reasonably.

Geometric tolerancing methods can expand the effective molding tolerance by better defining the size and position requirements for the assembly. Rather than define the position and size of features separately, geometric tolerancing defines a tolerance envelope in which size and position are considered simultaneously.

Figure 2-41 shows the size and position of a hole specified in both standard and geometric tolerances. The standard tolerances hold the position and size of the hole to ±0.003. The geometric tolerances specify a hole size tolerance of

Tolerances **Figure 2-41**

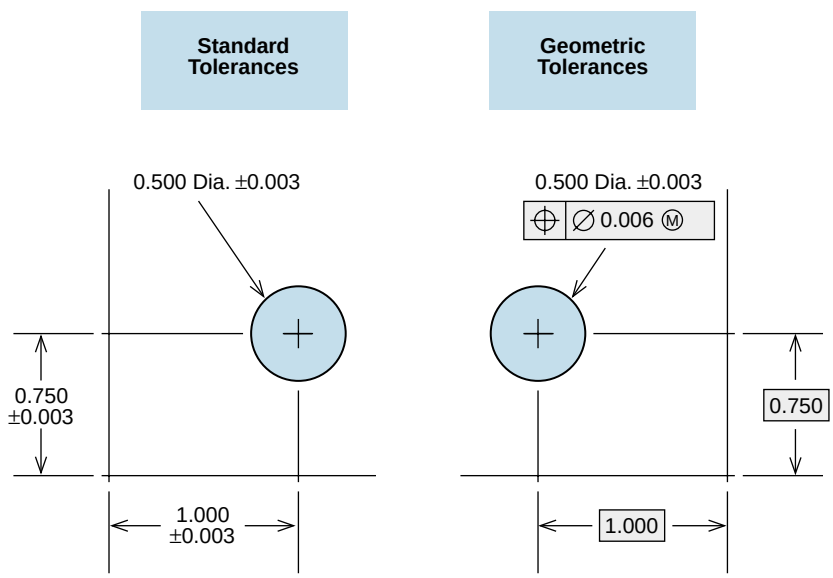

Unlike standard tolerancing, geometric tolerancing can allow a feature position to vary with the size of the feature.

±0.003 but allow the position tolerance to vary within a 0.006 tolerance zone when the hole is at its smallest diameter (maximum material condition). When the hole is larger than the minimum size, the difference between the actual hole size and the minimum hole size can be added to the tolerance zone for the position tolerance. At the maximum hole size, 0.503, the position tolerance zone for the center of the hole is 0.012 or ±0.006 from the stated vertical and horizontal positions. As the hole becomes larger, the position can vary more without restricting the required through-hole for the post or screw that passes through the hole (see figure 2-42).

BEARINGS AND GEARS

Material friction and wear properties play a key role in the performance of **bearings** and **gears** made of plastic. For instance, Durethan polyamide resins exhibit properties suitable for many gear and bearing applications. Used frequently as over-molded, gear-tooth liners, Texin thermoplastic urethane elastomers demonstrate excellent abrasion resistance and shock-dampening properties.

Because plastic parts exhibit complex wear behavior, predicting gear and bearing performance can be difficult. However, certain trends prevail:

- When the mating components of a bearing or gear are made of the same material, the wear level is much higher, unless the load and temperature are very low;
- When both contacting plastics are unfilled, usually wear is greater on the moving surface;
- When plastic components will wear against steel, use glass fillers to increase the life of plastic components; and
- When designing bearing parts for longevity, keep frictional heating low and ensure that heat dissipates quickly from the bearing surface.

Tolerances **Figure 2-42**

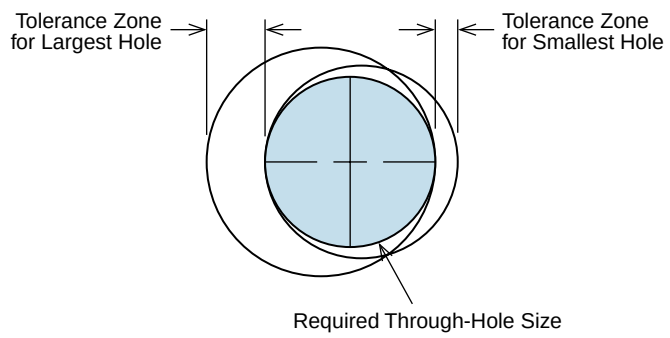

As the hole size increases, the position tolerance can increase without restricting the through-hole clearance.

The **PV factor**, a major factor in the formation of frictional heat, is the product of the pressure (P) exerted on the projected area of the bushing and the surface velocity (V) of the shaft. Testing shows that plastics exhibit a sharp increase in wear at PV values above a limit characteristic of the specific resin (see table 2-2). The PV factor for the bushing must not exceed the **PV limit** (minus appropriate safety factor) established for the selected resin.

Many factors influence the effective PV limit and actual bushing performance. For instance, bushings made of plastic last longer when the shafts are hard and finely polished. Other points to consider:

Table 2-2 **Approximate PV Limits at 100 Feet/Minute**

Polycarbonate	500
Thermoplastic PU	1,500
Polyamide 6	2,000
Polyamide 6/6	2,500
Polyamide 6 30% GF	8,500

- Avoid soft-metal shafts when the loads or rotational speeds are high;
- Add holes or grooves to the inside of the bushing to capture debris and prevent premature wear;
- Protect the bearings with seals or guards in dirty environments; and
- Check the compatibility of lubricants with your specific plastic.

If chemically compatible, lubricants can more than double the PV limit and greatly increase the life of gears and bearings.

Differences in the coefficient of linear thermal expansion between the shaft and the bushing can change the clearance and affect part life. Calculate the clearance throughout the service temperature range, maintaining a minimum clearance of approximately 0.005 inch per inch of diameter. Always test your specific shaft and bushing combination under the full range of temperatures, speeds, loads, and environmental conditions before specifying a bushing material or design.

Chapter 3

STRUCTURAL DESIGN

This chapter assumes the reader has a working knowledge of mechanical engineering and part design, and therefore focuses primarily upon those aspects of structural design that are unique or particularly relevant to plastics. Two main goals of this chapter are to show how to use published data to address the unusual behavior of plastics in part design, and to show how to take advantage of the design freedom afforded by molding processes to meet your structural requirements.

STRUCTURAL CONSIDERATIONS IN PLASTICS

When designing parts made of plastics, be sure to consider not only the magnitude of mechanical loads but also their type and duration. More so than for most materials, plastics can exhibit dramatically different behavior depending on whether the loading is instantaneous, long term, or vibratory in nature. Temperature and other environmental conditions can also dramatically affect the mechanical performance of the plastic material. Many aspects of plastic behavior, including visco-elasticity and sensitivity to a variety of processing-related factors, make predicting a given part's performance in a specific environment very difficult. Use structural calculations conservatively and apply adequate safety factors. We strongly suggest prototype testing for all applications.

Plastic part design must also take into account not only the structural requirements anticipated in the end-use application, but also the less obvious mechanical loads and stresses that can occur during operations such as manufacturing, assembly, and shipping. These other sources of mechanical loads can often place the highest structural demands on the plastic part. Carefully evaluate all of the structural loads the part must endure throughout its entire life cycle.

The mechanical properties of plastics differ from metals in several important ways:

- Plastics exhibit much less strength and stiffness;
- Mechanical properties are time and temperature dependent;
- Plastics typically exhibit nonlinear mechanical behavior; and
- Processing and flow orientation can greatly affect properties.

The following sections briefly discuss the relevance of these differences when designing plastic parts. For more on these topics, consult the Bayer Corporation companion to this manual: *Material Selection: Thermoplastics and Polyurethanes*.

Stiffness

Designing parts with adequate stiffness can be difficult, particularly if your part was made of metal originally. If your design needs the strength and/or stiffness of a metal part, you must account for the large disparity between plastic and metal mechanical properties (see table 3-1). Increasing wall thickness may compensate for the lower stiffness of plastic resins. In practice, however, the molding process limits wall thickness to approximately 0.25 inch in solid, injection-molded parts. More typically, wall thickness ranges from 0.060 to 0.160 inches. Generally, good part designs incorporate stiffening features and use part geometry to help achieve required stiffness and strength. These design considerations are covered in greater detail in the section *Designing for Stiffness* on page 67.

Viscoelasticity

Plastics exhibit viscoelastic behaviors under load: they show both plastic and elastic deformation. This dual behavior accounts for the peculiar mechanical properties found in plastics. Under mild loading conditions, plastics usually return to their original shape when the load is removed, exhibiting an elastic response. Under long-term, heavy loads or at elevated temperatures, this same plastic will deform, behaving more like a high-viscosity liquid. This time- and temperature-dependent behavior occurs because the polymer chains in the part do not return to their original position when the load is removed. The **Voight-Maxwell model** of springs and dashpots illustrates these characteristics (see figure 3-1). Spring A in the Maxwell model represents the instantaneous response to load and the linear recovery when the load is removed. Dashpot A connected to the spring simulates the permanent deformation that occurs over time.

Table 3-1 **Property Comparison of Metals and Plastics**

Material	Modulus of Elasticity (10^6 psi)	Tensile Strength (1,000 psi)	Yield Strength (1,000 psi)	Poisson's Ratio
Steel	28.5	70	40	0.29
Copper (Annealed)	15.6	32	5	0.36
Aluminum	10.0	56	34	0.33
SAN	0.47	4	5	0.35
Polycarbonate	0.35	10	9	0.38
ABS	0.34	—	6	0.39
PA* Unfilled	0.16	8	6	0.40
PA* 30% Glass	0.72	15	—	0.34
PC/ABS	0.35	7	8	0.38

* Conditioned

Voight-Maxwell Model **Figure 3-1**

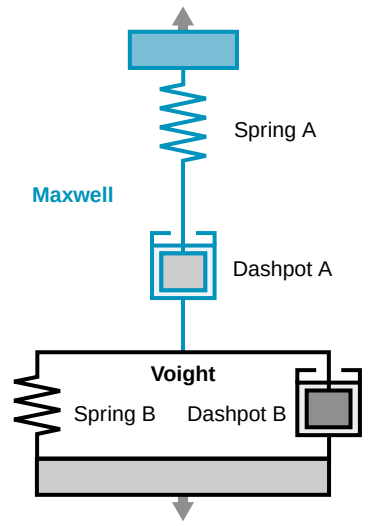

Voight-Maxwell model simulating viscoelastic characteristics.

Stress-Strain vs. Temperature **Figure 3-2**

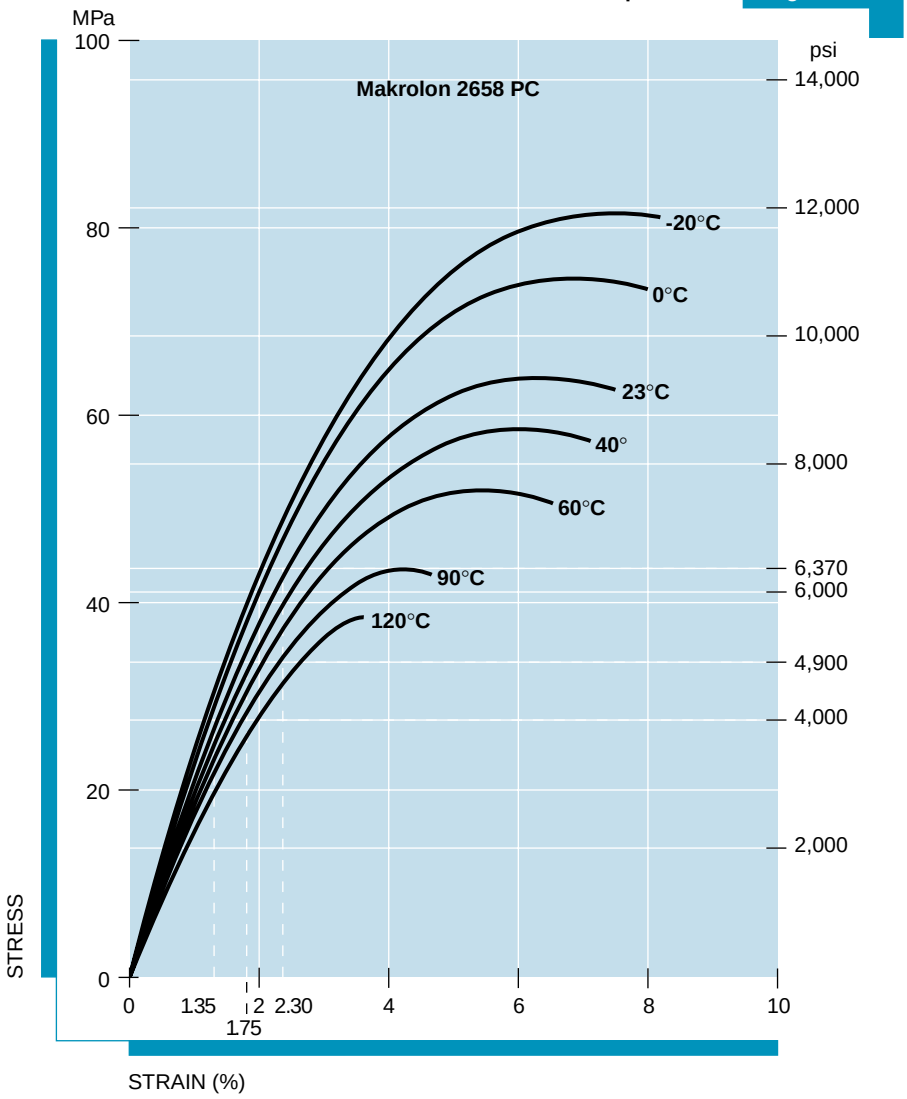

Viscoelasticity causes most plastics to lose stiffness and strength as the temperature increases (see figure 3-2). As a plastic part is exposed to higher temperatures, it becomes more ductile: yield strength decreases and the strain-at-break value increases. Plastic parts also exhibit **creep**, the increase in deformation over time in parts under continuous load or stress, as well as **stress relaxation**, the reduction in stress over time in a part under constant strain or deformation. To account for this behavior, designers should use data that reflect the correct temperature, load, and duration to which the part will be exposed. These topics are discussed more fully in the section *Long-Term Loading* on page 73.

Stress-Strain Behavior

A simple tensile test determines the stress-strain behavior of plastic materials. The results, usually expressed as a curve, show the relationship between **stress**, the force per original cross-sectional area, and **strain**, the percentage of change in length as a result of the force. Nearly linear at very low stress and strain levels, the stress-strain behavior of plastics tends to become increasingly nonlinear as these loads increase. In this context, the term "nonlinear" means that the resulting strain at any particular point does not vary proportionally with the applied stress.

Viscoelasticity **Figure 3-3**

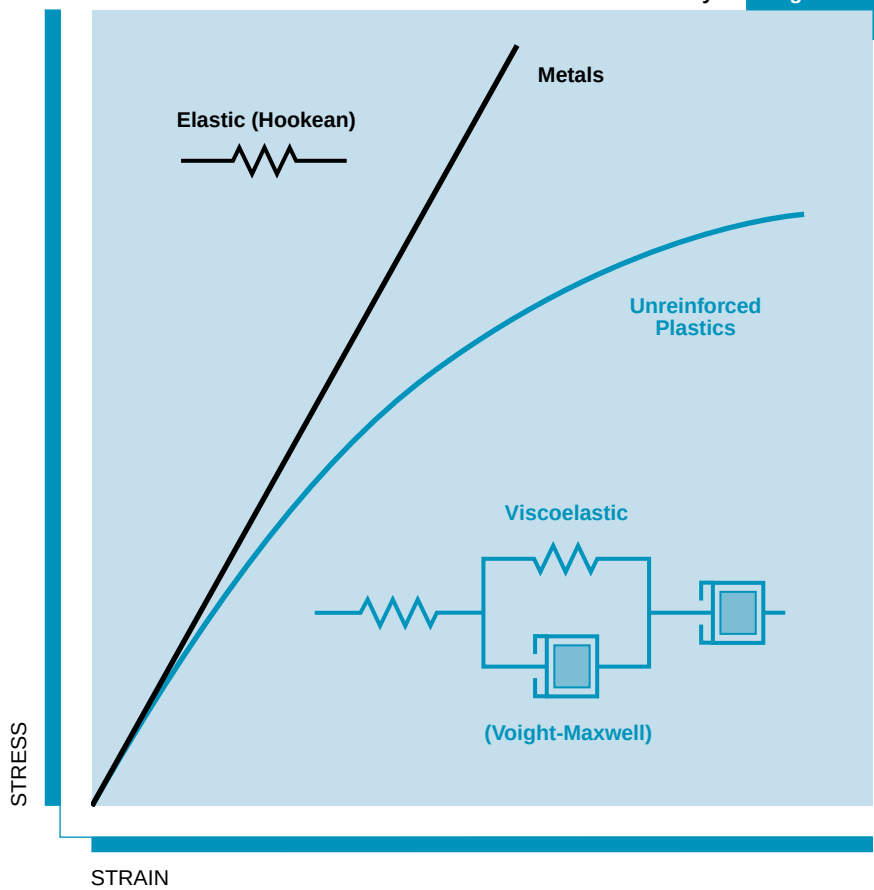

Metals usually function within the elastic (Hookean) range of mechanical behavior. Unreinforced plastics tend to exhibit nonlinear behavior represented here by the combination of springs and dashpots.

Secant Modulus **Figure 3-4**

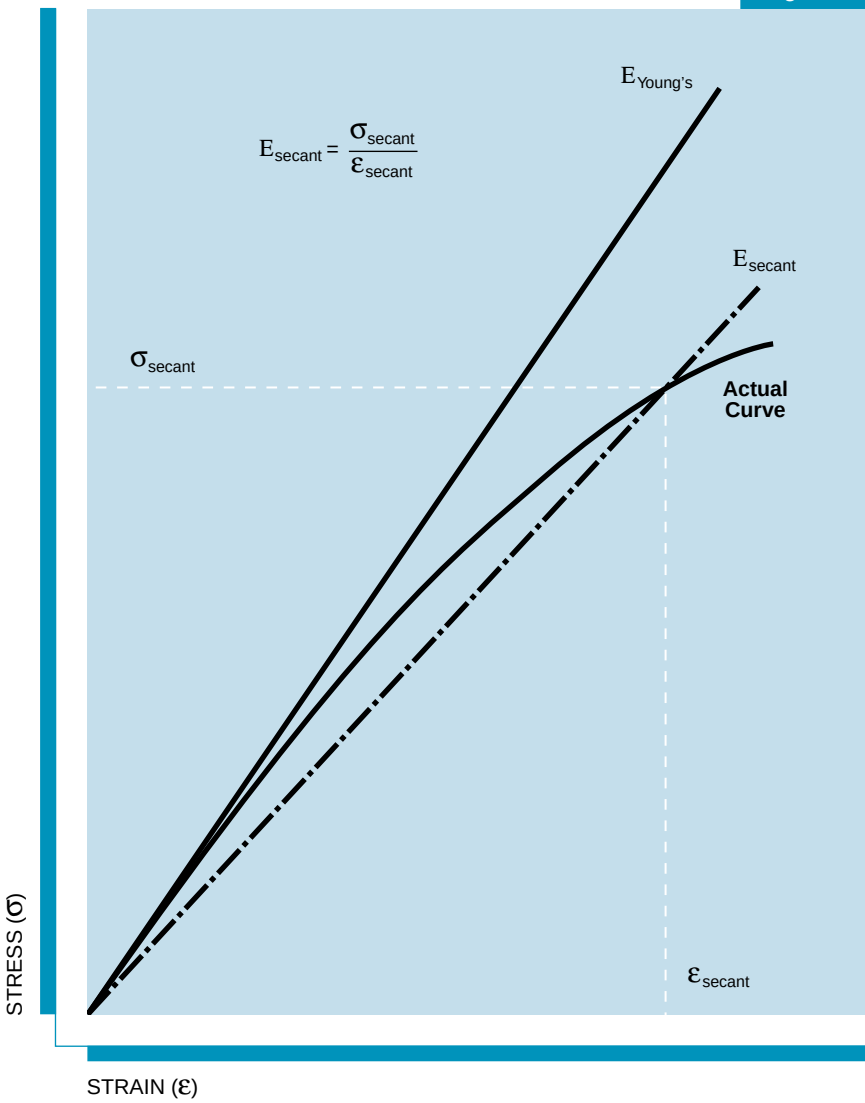

The Young's modulus derived from the stress-strain behavior at very low strain can overstate the material stiffness. A calculated secant modulus can better represent material stiffness at a specific stress or strain.

Figure 3-3 shows typical stress-strain curves for steel and unreinforced thermoplastic materials. While metals can exhibit plastic behavior, they typically function within the elastic (Hookean) range of mechanical performance. Because of viscoelasticity, unreinforced plastic materials tend to exhibit non-linear behavior through much of their operating range. Even at low strain values, plastics tend to exhibit some nonlinear behavior. As a result, using the tensile modulus or **Young's modulus**, derived from stress over strain in the linear region of the stress-strain curve, in structural calculations could lead to an error. You may need to calculate the **secant modulus**, which represents the stiffness of a material at a specific strain or stress level (see figure 3-4). The use of secant modulus is discussed in the example problems later in this chapter.

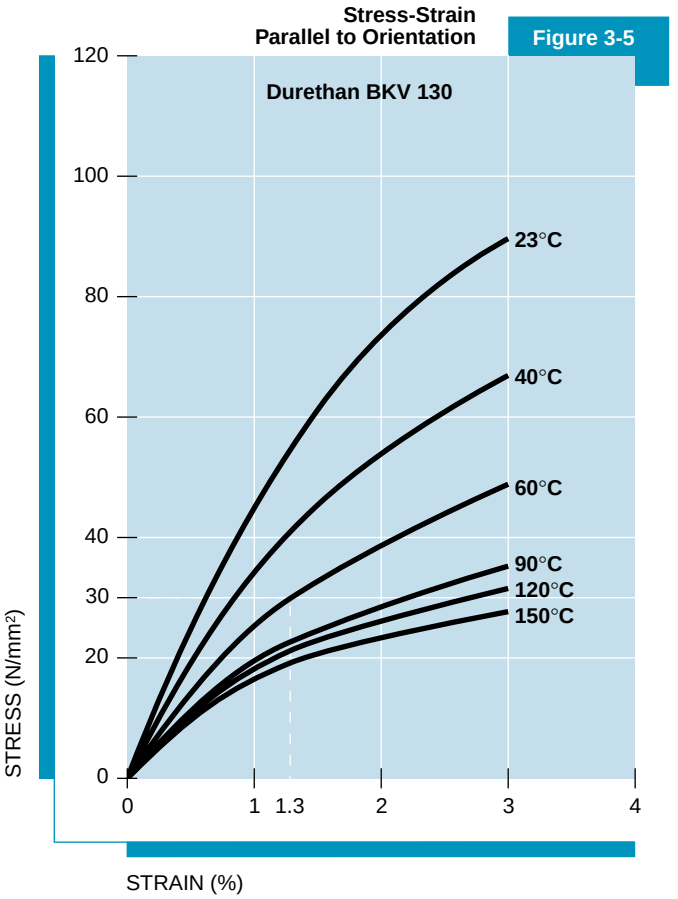

This graph shows the stress-strain performance parallel to fiber orientation at various temperatures for a 30% glass-filled PA 6 material after conditioning.

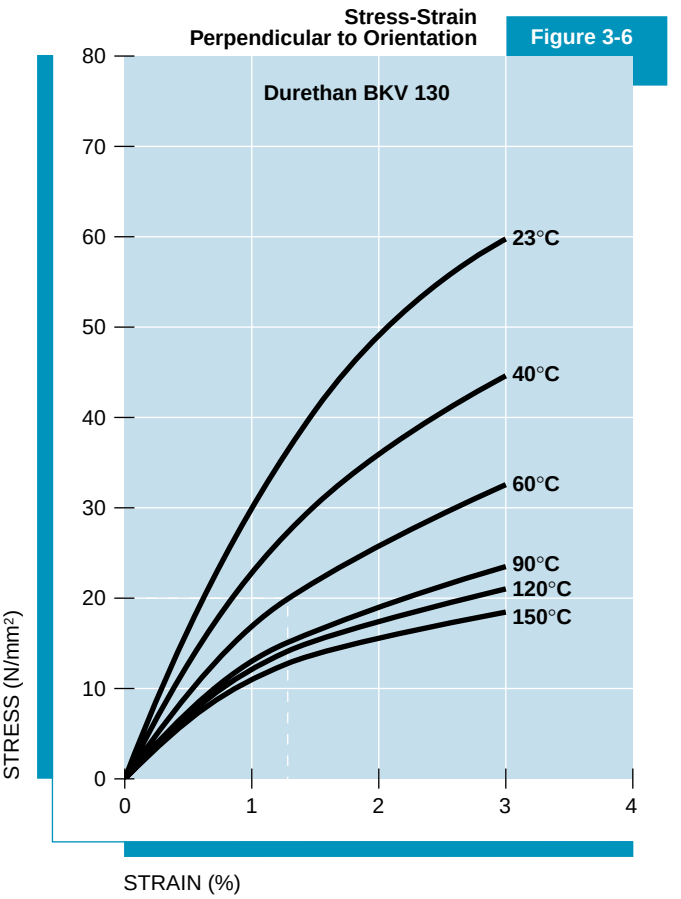

This graph shows the stress-strain performance perpendicular to fiber orientation at various temperatures for a 30% glass-filled PA 6 material after conditioning.

Molding Factors

The injection-molding process introduces stresses and orientations that affect the mechanical performance of plastic parts. The standard test bars used to determine most mechanical properties have low levels of molding stress. The high molding stresses in an actual part may reduce certain mechanical properties, such as the amount of applied stress a given part can endure. Always add reasonable safety factors and test prototype parts before actual production.

In glass-filled resins, fiber orientation also affects mechanical performance: fatigue strength for a given fiber-filled resin is often many times greater when the fibers are aligned lengthwise, rather than perpendicular to the fatigue load. Stress-strain performance in the direction of fiber orientation can also differ greatly from the performance in the direction perpendicular to the fibers. Figures 3-5 and 3-6 show stress versus strain for a 30% glass-filled PA 6 in the parallel-to-fiber and perpendicular-to-fiber directions.

Unless otherwise stated, most mechanical properties derive from end-gated test bars that exhibit a high degree of orientation in the direction of the applied test load. Mechanical calculations based on this kind of data may over-predict material stiffness and performance in

parts with random fiber orientation or in applications in which the fibers lie perpendicular to the applied loads. Fiber orientation in an actual part is seldom as uniform as it is in test bars. Address this potential source of error in your calculations and apply appropriate safety factors. For critical parts, you may want to perform a structural finite-element analysis using fiber-orientation data from mold-filling analysis and unique mechanical properties for the orientation and cross-orientation directions.

SHORT-TERM MECHANICAL PROPERTIES

This section gives some commonly used criteria to define and describe the short-term strength mechanical behavior of thermoplastic materials. Specific property data for Bayer materials can be found in the CAMPUS© database system for plastics, and in Bayer's *Property Guide*. Consult the Bayer publication *Material Selection* for information on the various test methods and property data used for thermoplastics engineering resins. These publications are available through your Bayer sales representative.

Tensile Properties

Tensile properties are measured in a device that stretches a molded test bar between two clamping jaws. The jaws separate at a steady rate, and the device records the force per cross-sectional area (stress) required to stretch the sample from 0% elongation to break. The results are often graphed as stress versus percentage elongation (strain). Figure 3-7 shows the kinds of stress-strain behavior exhibited by plastics. Rigid plastics exhibit a nearly linear behavior similar to metals. Ductile materials display a more complex behavior.

Figure 3-7

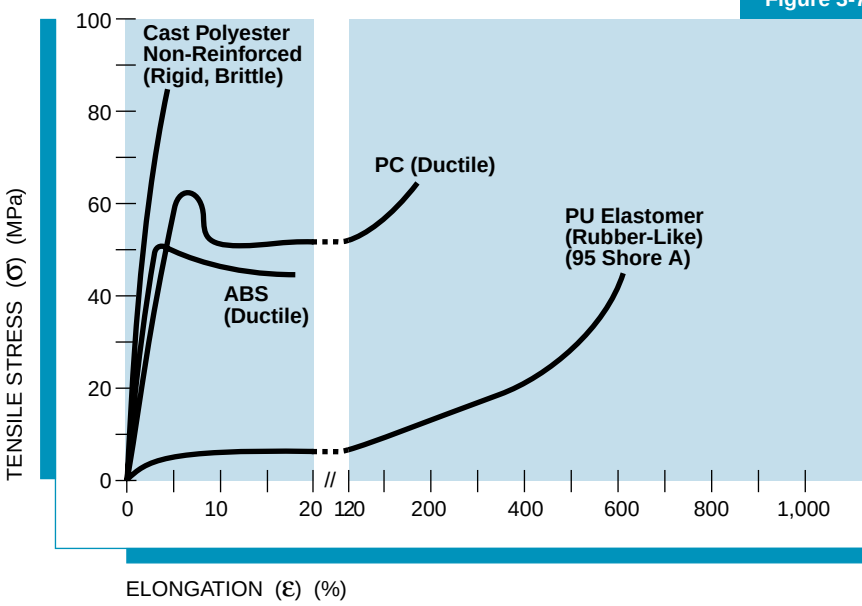

These curves illustrate the characteristic differences in the stress-strain behavior of various plastics.

Figure 3-8 identifies the transitional points in the stress-strain behavior of ductile plastics. Point A, the **proportional limit**, shows the end of the region in which the resin exhibits linear stress-strain behavior. Point B is the **elastic limit**, or the point after which the part will be permanently deformed even after the load is removed. Applications that cannot tolerate any permanent deformation must stay below the elastic limit. Point C, the **yield point**, marks the beginning of the region in which ductile plastics continue to deform without a corresponding increase in stress. **Elongation at yield** gives the upper limit for applications that can tolerate the small permanent deformation that occurs between the elastic limit and the yield point, but not the larger deformation that occurs during yield. Point D, the **break point**, shows the strain value when the test bar breaks.

Figure 3-8

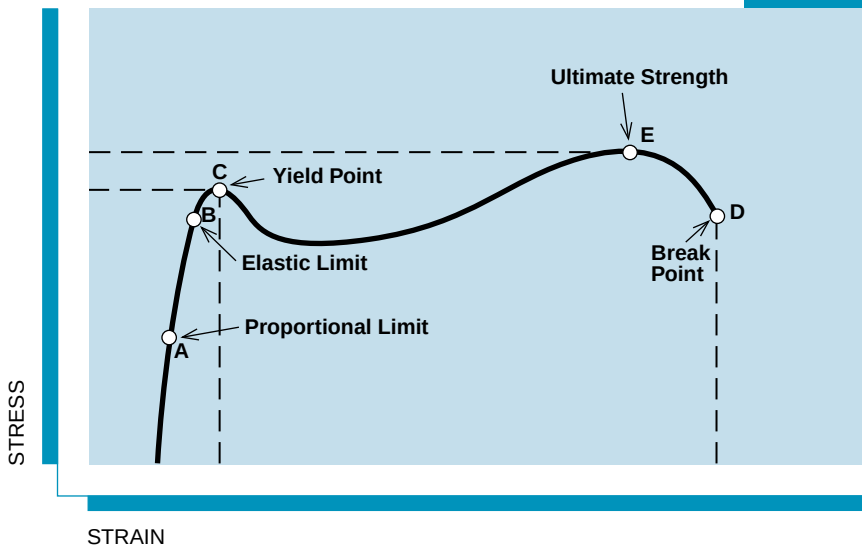

Typical stress-strain behavior of unreinforced plastics.

Tensile Modulus

Commonly used in structural calculations, tensile modulus measures material stiffness. Higher values indicate greater stiffness. Because of plastic's viscoelastic behavior, determining tensile modulus is more subjective and less precise for plastics than it is for metals and most other materials. Mathematically, you can determine the tensile modulus by taking the ratio of stress to strain as measured below the proportional limit on the stress-strain curves. When dealing with materials with no clear linear region, you can calculate the modulus at some specified strain value, typically at 0.1%. For some applications, buckling analysis, for example, it may be more appropriate to derive a modulus from the slope of a line drawn tangent to the curve at a point on the stress-strain diagram (tangent modulus).

Tensile Stress at Yield

Tensile stress at yield, the stress level corresponding to the point of zero slope on the stress-strain curve, generally establishes the upper limit for applications that can tolerate only small permanent deformations. Tensile-stress-at-yield values can be measured only for materials that yield under test conditions.

Tensile Stress at Break

Tensile stress at break is defined as the stress applied to the tensile bar at the time of fracture during the steady-deflection-rate tensile test. Data for tensile stress at break establish the upper limits for two types of applications:

one-time-use applications that normally fail because of fractures, and applications in which the parts can still function after undergoing permanent deformation.

Ultimate Strength

Ultimate strength measures the highest stress value encountered during the tensile test. This value should be used in general strength comparisons, rather than as a design criterion. Ultimate strength is usually the stress level at the breaking point in brittle materials. For ductile materials, it is often the value at yield or break.

Poisson's Ratio

As a plastic specimen stretches longitudinally in response to tensile loading, it narrows laterally. Poisson's ratio measures the ratio of lateral to longitudinal strains as the material undergoes tensile loading. Poisson's ratio usually falls between 0.35 and 0.40 for engineering resins (see table 3-1). Some elastomeric materials approach the constant-volume value of 0.50.

Compressive Properties

Under equivalent loading conditions, plastics tend to fail in tension rather than compression. For this reason it is more common to test tensile properties rather than compressive properties. As a rule of thumb, plastics tend to be approximately 30% stronger under compressive loading. Consult your Bayer representative if your application requires detailed analysis in a compressive mode. Assuming that the compressive strength equals the tensile strength usually results in a conservative design.

Flexural Modulus

Defined as the ratio of stress to strain in the elastic region of a stress-strain curve derived from flexural testing, flexural modulus measures a resin's stiffness during bending. A test bar subjected to bending loads distributes tensile and compressive stresses through its thickness. The flexural modulus is based upon the calculated outer-fiber stress. Test values for tensile modulus typically correlate well with those of the flexural modulus in solid plastics, but differ greatly for foamed plastics that form solid skins.

Coefficient of Friction

The coefficient of friction is the ratio of friction force, the force needed to initiate or maintain sliding, to normal force, the force perpendicular to the contact surfaces. Coefficients are commonly listed for two types of friction: **static friction**, the forces acting on the surfaces to resist initial movement, and **dynamic friction**, the forces acting between surfaces that are already sliding. Table 3-2 lists typical values for common plastics.

Table 3-2 **Coefficients of Friction (Static) Ranges for Various Materials**

Material	On Self	On Steel
PTFE	0.10 – 0.25	0.10 – 0.25
PE Rigid	0.40 – 0.50	0.20 – 0.25
PP	0.35 – 0.45	0.25 – 0.35
POM	0.25 – 0.50	0.15 – 0.35
PA	0.30 – 0.50	0.30 – 0.40
PBT	0.30 – 0.40	0.30 – 0.40
PS	0.45 – 0.60	0.40 – 0.50
SAN	0.45 – 0.65	0.40 – 0.55
PC	0.40 – 0.65	0.35 – 0.55
PMMA	0.60 – 0.70	0.50 – 0.60
ABS	0.60 – 0.75	0.50 – 0.65
PE Flexible	0.65 – 0.75	0.55 – 0.60
PVC	0.55 – 0.60	0.55 – 0.60

LONG-TERM MECHANICAL PROPERTIES

Time and temperature affect the long-term mechanical properties of plastics because they affect polymer-chain mobility. Plastics under constant load tend to deform over time to redistribute and lower internal stresses. The mobility of polymer chains determines the rate of this stress redistribution. Higher temperatures increase the free space between molecules, as well as the molecular-vibration energies, resulting in a corresponding increase in polymer-chain mobility. Even at moderate temperatures, polymer chains can reorient in response to applied loads, if given enough time. Two consequences of long-term loading are **creep**, the added deformation that occurs over time in parts under constant stress, and **stress relaxation**, the reduction in stress in parts subjected to constant strain.

Creep and Recovery **Figure 3-9**

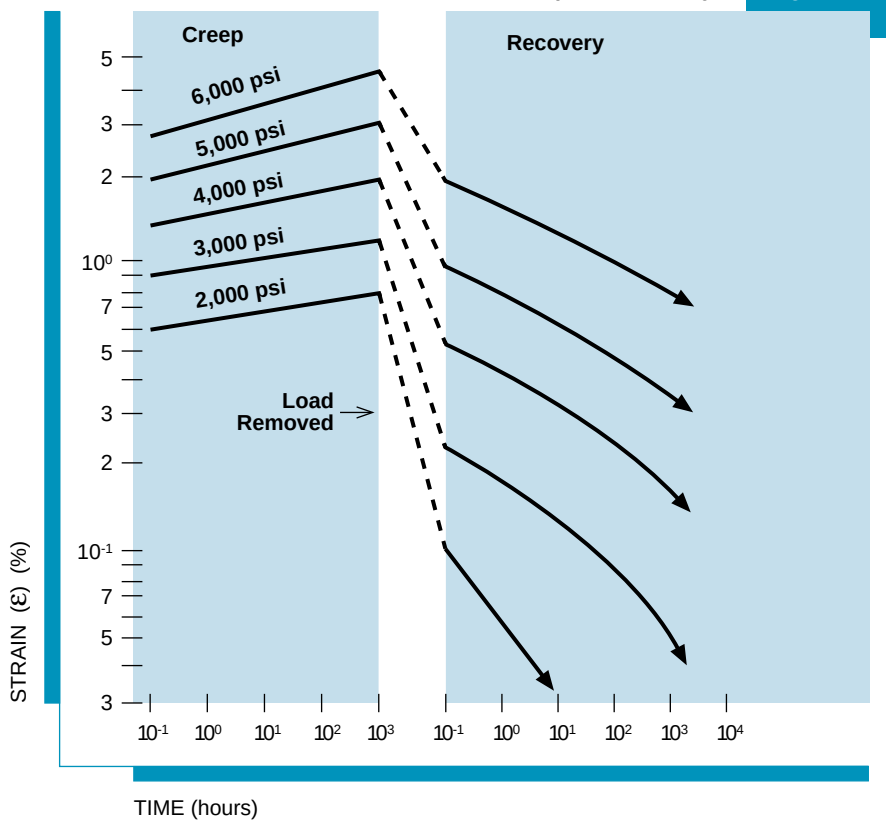

Creep and recovery of Makrolon polycarbonate at 73°F (23°C).

Creep Properties

Over time, parts subjected to a constant load often distort beyond their initial deformation; they creep. Long-term creep data helps designers estimate and adjust for this additional deformation. A common creep test involves hanging a weight axially on the end of a test bar and monitoring increases in the bar length over time. Presented graphically in a variety of forms, creep and recovery data is often plotted as strain versus time at various stress levels throughout the creep and recovery phases (see figure 3-9).

Isochronous Stress-Strain **Figure 3-10**

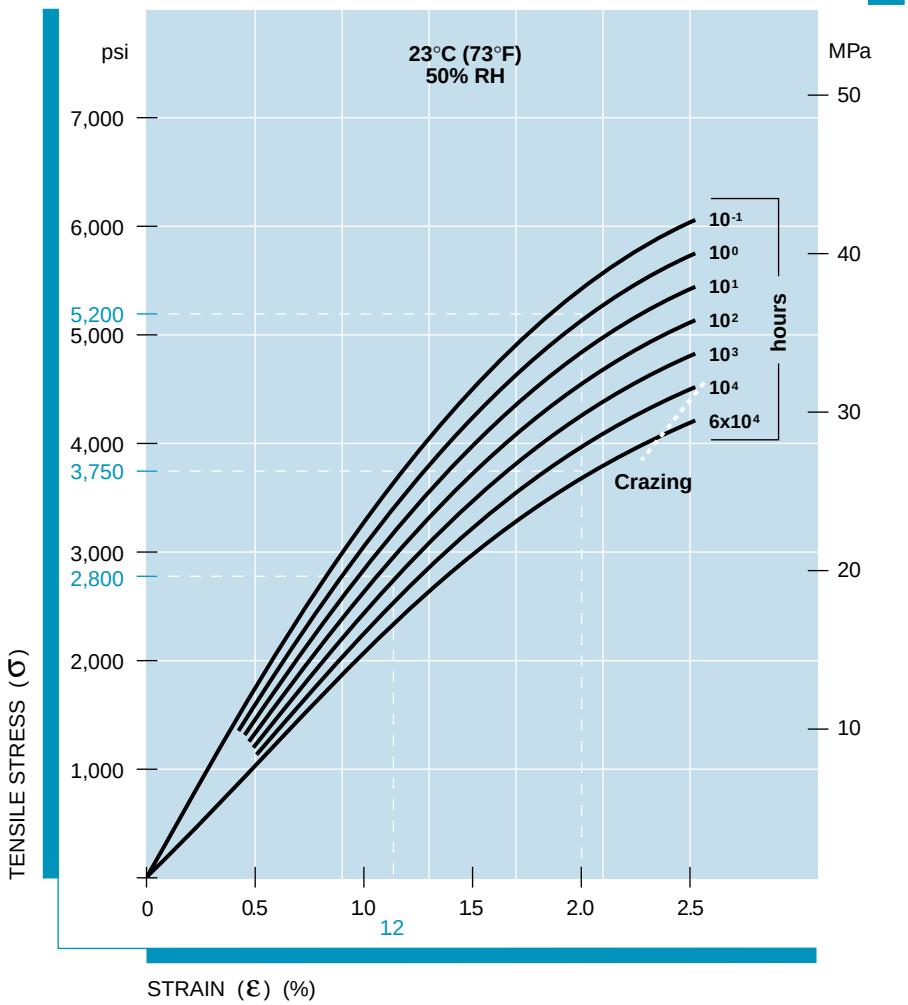

Isochronous stress-strain curves at 73°F (23°C) for Makrolon polycarbonate.

Another popular form for creep data, the **isochronous stress-strain curve**, plots tensile stress versus strain at given time increments (see figure 3-10). To determine the **apparent modulus** or **creep modulus**, divide the calculated stress by the resulting strain as read from the isochronous curve corresponding to the time duration desired. For example, assuming room-temperature conditions, a tensile stress of 2,800 psi, and a load duration of 1,000 hours, we see in figure 3-10 that the corresponding strain is 1.2%. Dividing the stress by the strain, we calculate an apparent modulus of 220,000 psi. Substituting this apparent modulus or creep modulus into deflection formulas, in place of the instantaneous tensile modulus, will enable the formula to better predict the deformation that will occur over time.

Isochronous Stress-Strain **Figure 3-11**

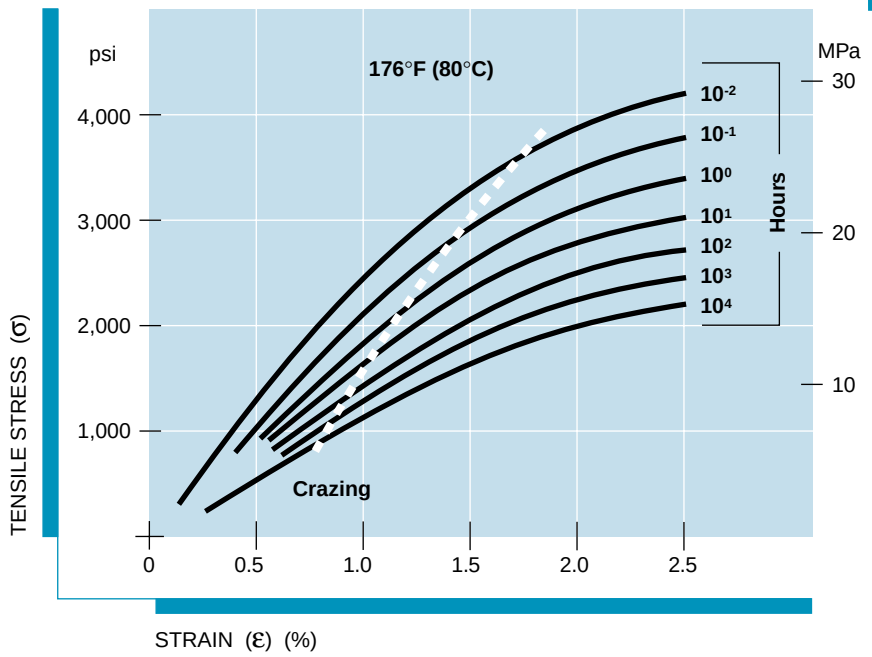

Isochronous stress-strain curves at 176°F (80°C) for Makrolon polycarbonate.

As mentioned earlier, temperature affects the long-term and short-term properties of plastics. Compare the isochronous stress-strain curve for polycarbonate at room temperature in figure 3-10 with the curves in figure 3-11 for the same material at 176°F (80°C). In general, higher ambient temperatures will cause more creep deformation. Be sure to use creep data derived at temperatures appropriate for your application.

Stress Relaxation

Stress relaxation, the stress reduction that occurs in parts subjected to constant strain over time, is an important design concern for parts that will be subjected to long-term deflection. Because of stress relaxation, press fits, spring fingers, and other part features subject to constant strain can show a reduced retention or deflection force over time (see example problem 3-7).

You can derive stress-relaxation information from isochronous stress-strain curves by noting the change in stress corresponding to a given strain on the different time curves. In figure 3-10, the tensile stress at 2% strain drops from an instantaneous value of 5,200 psi to approximately 3,750 psi after 10,000 hours. Stress-relaxation modulus, calculated by dividing the stress (after a specific time) by the fixed strain value, accounts for stress relaxation in standard engineering equations.

These curves also may show when crazing could occur in transparent polycarbonate parts. **Crazing** — the formation of tiny, reflective cracks that can appear when a part is subjected to long-term loads — precedes larger cracks and part failure. In figure 3-10, you can see that crazing occurs at 2.5% strain after 10,000 hours at room temperature.

Fatigue Properties

Molded plastic parts exposed to cyclic loading often fail at substantially lower stress and strain levels than parts under static loading, a phenomenon known as **fatigue**. Applications that expose parts to heavy vibrations or repeated deflections — such as snowplow headlight housings, one-piece salad tongs, and high-use snap-latch closures — need plastics with good fatigue characteristics.

Fatigue curves, generated from tests that subject test specimens to cyclic loading until failure or a fixed reduction in stress or strain, provide a useful means for comparing the relative fatigue endurance of different plastics. The results are often presented in the form of **S-N curves** (see figure 3-12) that plot the stress amplitude against the number of cycles to failure. Fatigue information can also appear as stress or strain limits on stress-strain curves as in figure 3-13.

S-N Curves **Figure 3-12**

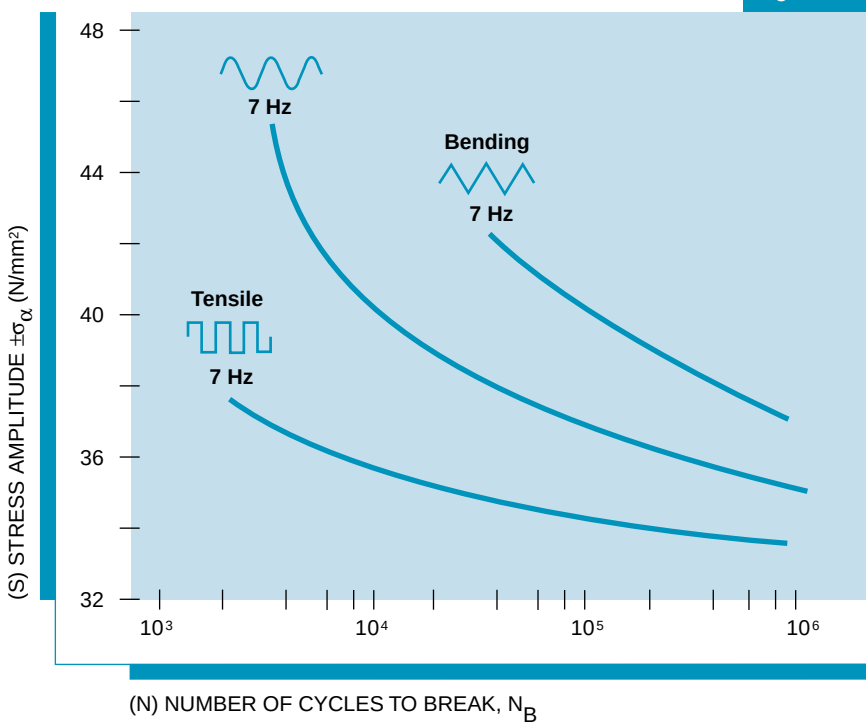

Fatigue test curve for glass-filled Durethan polyamide in three cyclic-loading modes.

Dynamic Load Limits **Figure 3-13**

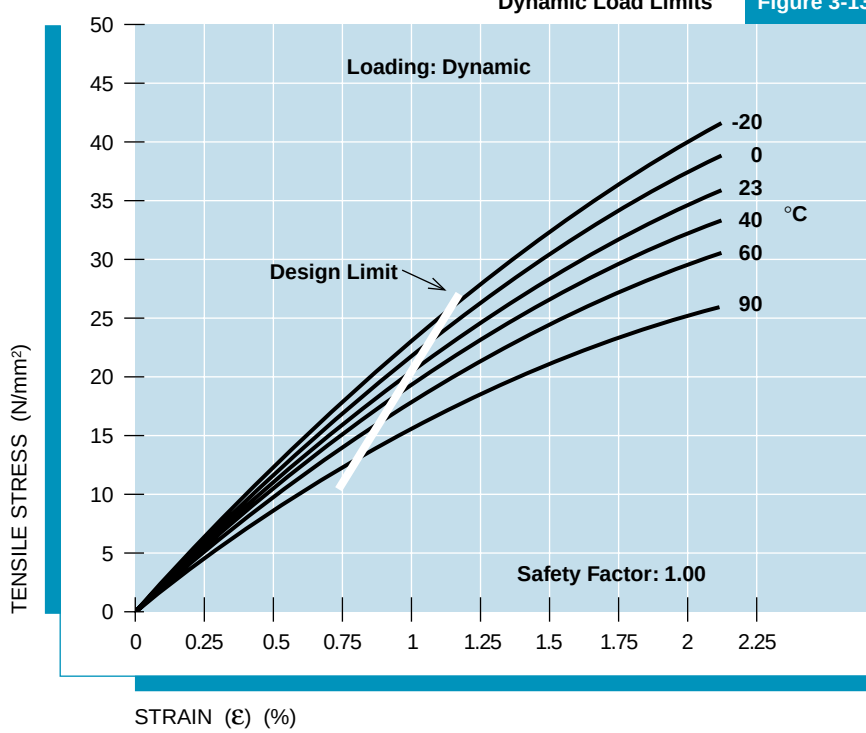

Stress-strain curves for Bayblend T85MN PC/ABS showing limits at various temperatures for dynamic loading.

The white line shows the suggested design limit at various temperatures for a Bayblend PC/ABS resin used in applications subjected to dynamic fatigue loading for 10^7 cycles.

Fatigue properties are sensitive to many factors including notch effects, environmental factors, stress concentrators, loading frequency, and temperature. Surface texture, surface finish, and whether the part is plated also affect fatigue performance. In contrast to metals, plastics have a high degree of inherent damping and relatively low thermal conductivity. Therefore, vibration frequencies as low as 10 Hz can cause heat generation in plastic parts. This can lead to thermal failure if the energy cannot be properly dissipated by other means, such as convection.

Fiber orientation can also affect fatigue performance. Fatigue strength for a given fiber-filled resin can be many times greater when the fibers are aligned lengthwise in the direction of loading rather than perpendicularly. When calculating fatigue-life values, use fatigue data that is appropriate for your application, and always include a suitable safety factor.

STRUCTURAL DESIGN FORMULAS

Finite-element-analysis (FEA) techniques, now common in plastic part design, provide valuable information about the mechanical performance of complex or critical designs. For simple geometries and noncritical parts, standard design formulas can give good results if the material remains within its elastic limit. Even in a complex part, an area or feature under load can often be represented by standard formulas.

Because they are primarily a function of part geometry and load and not material properties, stress calculation formulas derived for metals apply directly to plastics. Generally material dependent, deflection formulas require elastic (Young's) modulus and sometimes Poisson's ratio, ν. Poisson's ratio varies slightly with temperature and loading conditions, but usually only to an insignificant degree. Single-point data suffices for most calculations. Table 3-1 lists typical values for a variety of materials.

Use of Moduli

For short-term loads at room temperatures and stress levels below a resin's proportional limit, use the instantaneous elastic modulus. At other temperatures, use isothermal stress-strain curves to calculate elastic modulus — simply stress divided by strain in the linear region — at the desired temperature. Simple bending calculations involving solid plastics undergoing short-term loading below the proportional limit can use either the flexural modulus or the published instantaneous tensile modulus.

For short-term loads in the nonlinear region above the proportional limit, such as assembly stresses, you will have to use a secant modulus, calculated from the curves and based upon the actual calculated stress. To calculate secant modulus, first solve the stress equation, which is independent of the elastic modulus for the material. Next read the strain corresponding to this calculated stress on the appropriate stress-strain curve. Then, divide the calculated stress by the strain to obtain the secant modulus for that stress level. The secant modulus typically provides satisfactory predictions of deflections in applications that experience higher strain levels. See example problem 3-3 for a demonstration of this procedure.

For long-term loads, use a creep or apparent modulus derived from isochronous stress-strain curves. A time-dependent property, creep modulus is the calculated stress divided by the corresponding strain value read from the isochronous stress-strain curve for the desired time span. Because the strain value is always changing in a part that is exhibiting creep, the creep modulus is also time dependent. Calculations using the creep modulus, a decreased-representative modulus value, predict the deflection that occurs after a period of time. See the *Long-Term Properties* section in this chapter for more information and example problems dealing with creep behavior.

Stress and Strain Limits

Plastics differ in the level of stress or strain they can tolerate in structural applications. Engineering strain is defined as the change in length of a specimen divided by its original length and is represented by the symbol ε. The actual units of strain are length divided by length (inches per inch, millimeters per millimeter) but it is most often represented as a percentage. Stress has units of force per cross-sectional area (pounds per square inch = psi, Newtons per square millimeter = Megapascals, MPa). Because stress and strain are interrelated, plastic parts can be designed based on either stress or strain limits.

Stress limits are best determined from isochronous stress-strain curves showing either crazing or design limits for the given time and temperature. Of course, appropriate safety factors should always be used. Use a safety factor of at least 2.0 — higher values are necessary in critical applications. General stress limits (such as 25% of the published tensile yield stress) usually have large inherent safety factors, but become less conservative at elevated temperatures or long-time use conditions. To apply a stress limit, simply solve the stress equation for the given load and geometry to determine if the limit is exceeded. Be sure to multiply the result by an appropriate stress-concentration factor (see figure 3-32) before making the comparison. If the limit is exceeded, reduce the load or increase the cross-sectional area to reduce stress below the limit. Note that because the stress equation itself is not modulus-dependent, it is almost always used in conjunction with the deflection equation to evaluate true design performance.

Table 3-3 lists the permissible short-term strain limits at room temperature for various families of Bayer engineering plastics. One-time, short-duration load applications that stay below these limits typically do not fracture or exhibit significant permanent deformation. Designs that see multiple applications of an applied load should stay below 60% of these values. Permissible strain values are typically used to design parts with short-term or intermittent loads such as cantilever snap arms. If a strain-based formula is not available, it can be created by substituting σ / ε for E in the deflection equation, then substituting the complete stress equation for σ.

Table 3-3 **Permissible Short-Term Strain Limits at 23°C (73°F)**

Unreinforced

Apec	High Heat PC	4.0%
Bayblend	PC/ABS	2.5%
Centrex	ASA	1.9%
Durethan	PA cond. dry	6.0% 4.0%
Lustran	ABS	1.8%
Makroblend	Polycarb. Blends	3.5%
Makrolon	PC	4.0%
Triax	PA/ABS	3.4%

Glass-Fiber-Reinforced (% Glass)

Makrolon (10%)	PC	2.2%
Triax (15%)	PA/ABS	2.2%
Makrolon (20%)	PC	2.0%
Durethan (30%)	PA cond. dry	2.0% 1.5%

General guide data for the allowable short-term strain for snap joints (single joining operation); for frequent separation and rejoining, use about 60% of these values.

Uniaxial Tensile and Compressive Stress

Because most plastic part failures are tensile failures and this failure mode is easy to test, the majority of the available stress-strain data were produced using tensile test methods. The compressive strength of plastic usually exceeds the tensile strength, but because it is more difficult to test, the compressive strength is usually assumed to equal the tensile strength, which is a conservative assumption.

Depending on geometry, excessive compressive stress may cause the part to buckle. Long, slender shapes are the most susceptible to this failure mode. Consult a strength-of-materials textbook or engineering handbook for analytical buckling formulas.

Example 3-1: Tensile Stress and Strain

A 5-inch-long bar with a cross section of 0.5 inch by 0.125 inch is exposed to a 250-pound tensile load. Calculate the stress and elongation of the Makrolon polycarbonate bar.

The definition of stress is load divided by cross-sectional area, so the stress is:

$$\sigma_t = P / A = 250 / [(0.5)(0.125)] = 4{,}000 \text{ psi}$$

Note that no modulus values are required to determine the stress, simply load and cross-sectional area. (In some cases however, Poisson's ratio is required.)

To find the elongation of the bar, determine the strain (change in length per unit length) created by the applied 4,000-psi stress. Using Young's modulus to calculate strain gives:

$$\varepsilon = \sigma / E = 4{,}000 \text{ psi} / 350{,}000 \text{ psi} = 0.011 \text{ in/in} = 1.1\% \text{ strain}$$

However, reading from the stress-strain curve at room temperature (23°C) in figure 3-2 gives a value of 1.35% strain for a stress of 4,000 psi. Since this strain value is greater than that calculated with Young's modulus, the sample must be strained beyond the proportional limit. The proper secant modulus for this case is then:

$$E_{secant} = 4{,}000 \text{ psi} / 0.0135 = 296{,}296 \text{ psi}$$

The definition of engineering strain is $\Delta L / L$, so to find the change in length, ΔL, multiply the original length of the sample by the strain. For the Young's modulus case, ΔL = (5 inch)(0.011) = 0.055 inch. But the correct answer using the actual stress-strain curve is ΔL = (5 inch)(0.0135) = 0.068 inch. In this case, the error introduced by using Young's modulus was about 19%.

Keep in mind that these calculations are assuming short-term loading. If the 4,000-psi stress is not removed after a short time, the material will creep causing strain to increase. Based on the set of isochronous curves shown in figure 3-10, crazing will occur after 6×10^4 hours (about 6.8 years) at a stress level of 4,000 psi. Extrapolating from this data, we can see that applying a safety factor of 2.0 and keeping the stress below 2,000 psi reduces the risk of crazing during the life of most parts in unharsh environments.

Tensile and Compressive Stresses in Bending **Figure 3-14**

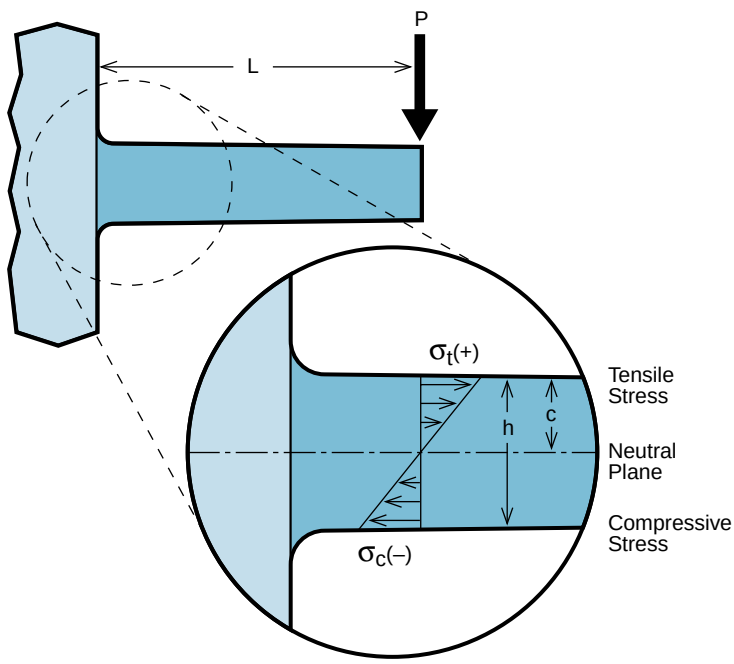

Bending and Flexural Stress

Bending or flexing a plastic part induces both tensile and compressive stresses through the cross section, as shown in figure 3-14. Bending creates tensile stresses on the convex side of the part and compressive stresses on the concave side. The neutral plane defines the plane of zero stress in which the stress magnitude switches from tensile to compressive. The stress distribution through the thickness of the part is defined by the formula:

$$\sigma_b = \frac{Mc}{I}$$

In this formula, M represents the bending moment applied to the beam. Bending moment can be defined as applied force times the distance to the point of interest. For the simple cantilever shown in figure 3-14, the moment at the attachment point is the load times the length of the beam, or P times L. The common units of moment are pound-inches or Newton-meters. The distance from the neutral plane to the point of interest is represented by c, and the moment of inertia of the cross section (not to be confused with bending moment) is represented by capital letter I. The moment of inertia indicates resistance to bending and has units of length to the fourth power (inches^4, millimeters^4). Defining section modulus, Z (not to be confused with the material modulus, E) as I divided by c allows the bending-stress formula to be rewritten:

$$\sigma_b = M / Z$$

Table 3-4 **Section Properties for Bending**

Cross-Sectional Shape	Area A	c	Moment of Inertia I	Section Modulus z = I/c
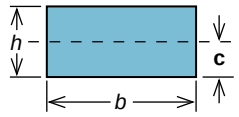	bh	$\frac{h}{2}$	$\frac{bh^3}{12}$	$\frac{bh^2}{6}$
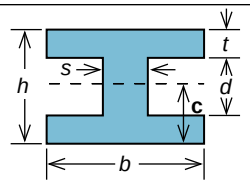 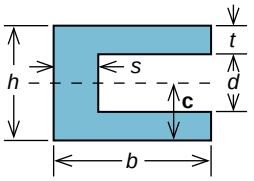	bh-d(b-s)	$\frac{h}{2}$	$\frac{bh^3-d^3(b-s)}{12}$	$\frac{bh^3-d^3(b-s)}{6h}$
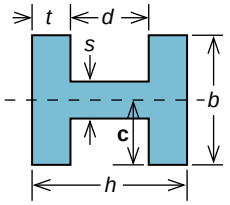	bh-d(b-s)	$\frac{b}{2}$	$\frac{2tb^3+ds^3}{12}$	$\frac{2tb^3+ds^3}{6b}$
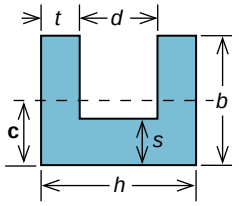	bh-d(b-s)	$\frac{2tb^2+ds^2}{2\mathbf{A}}$	$\frac{hb^3-d(b-s)^3}{3}-\mathbf{A}(b-\mathbf{c})^2$	Bottom in Tension: $\frac{\mathbf{I}}{\mathbf{c}}$ OR Top in Tension: $\frac{\mathbf{I}}{b-\mathbf{c}}$
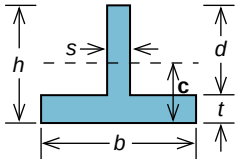	ds+bt	$\frac{h^2s+t^2(b-s)}{2\mathbf{A}}$	$\frac{bh^3-d^3(b-s)}{3}-\mathbf{A}(h-\mathbf{c})^2$	
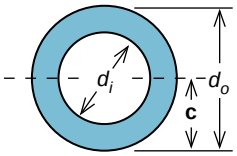 * For solid round let $d_i = 0$	$\frac{\pi(d_o^2-d_i^2)}{4}$	$\frac{d_o}{2}$	$\frac{\pi(d_o^4-d_i^4)}{64}$	$\frac{\pi(d_o^4-d_i^4)}{32d_o}$

Table 3-5 **Beam Bending Formulas**

Loading and Boundary Conditions	Bending Stress σ_b	Deflection y
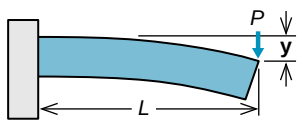	$\frac{PL}{Z}$	$\frac{PL^3}{3EI}$
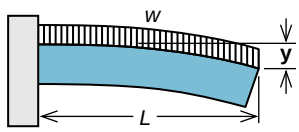	$\frac{wL^2}{2Z}$	$\frac{wL^4}{8EI}$
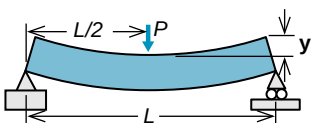	$\frac{PL}{4Z}$	$\frac{PL^3}{48EI}$
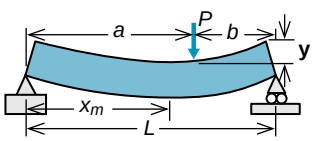	$\frac{Pab}{LZ}$	For a > b: $\frac{Pb(L^2-b^2)^{3/2}}{9\sqrt{3}EIL}$ At $x_m = \sqrt{\frac{L^2-b^2}{3}}$
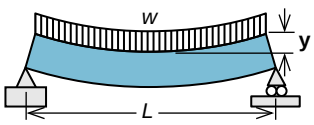	$\frac{PL}{8Z}$	$\frac{5wL^4}{384EI}$
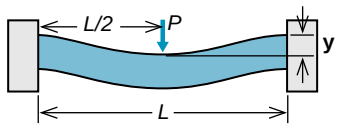	$\frac{PL}{8Z}$	$\frac{wL^4}{192EI}$
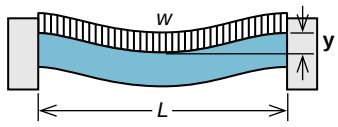	$\frac{PL}{12Z}$	$\frac{wL^4}{384EI}$

For design purposes, the maximum tensile bending stress is of primary interest. The maximum tensile bending stress is found when c is set equal to the distance from the neutral plane to the outer surface in tension.

Table 3-4 shows formulas for the cross-sectional area, A; distance from the neutral plane to the outer surface in tension, c; moment of inertia, I; and section modulus, Z, for various cross sections. The dashed line in the cross-sectional diagrams denotes the neutral plane, or in this case, neutral axis. The formulas assume the bending moment is applied about this axis. The cross sections that are not symmetrical about the neutral axis require some back-substitution of A and c to calculate I and Z.

Bending-stress formulas are highly dependent on boundary conditions. Boundary conditions define how the ends of the part are restrained, as well as the position of the load and whether it is concentrated or distributed across the surface of the part. Table 3-5 gives stress and deflection formulas for the bending of beams with different boundary conditions. The symbol P denotes concentrated loads (pounds, Newtons) and the symbol w denotes loads evenly distributed across the beam (pounds/inch, Newtons/millimeter). Use the values from table 3-4 for I and Z. For accurate results, use the secant modulus or apparent modulus for E.

Example 3-2: Beam Bending

A load of 250 pounds is placed on a 10-inch-long beam 4 inches from one end. The I-shaped beam is 1-inch wide and 1-inch tall with a uniform thickness of 0.2 inch. The environmental temperature is 140°F (60°C). The beam was injection molded from Durethan BKV 130 PA 6 resin through a gate on one end. Find the maximum deflection of the beam and at what point the maximum deflection occurs.

First, calculate the section properties of the I-beam. From table 3-4 with b = h = 1, s = t = 0.2 and d = 0.6:

$$c = h / 2 = 1 / 2 = 0.5 \text{ inch}$$

$$I = [(1)(1)^3 - (0.6)^3(1-0.2)] / 12 = 0.0689 \text{ inch}^4$$

$$Z = I / c = 0.0689 / 0.5 = 0.1378 \text{ inch}^3$$

Now find the appropriate stress formula for the given boundary conditions in table 3-5. The fourth condition is correct. Solving for maximum tensile bending stress with a = 6, b = 4, L = 10, and P = 50 gives:

$$\sigma_b = Pab / LZ = (250)(6)(4) / [(10)(0.1378)] = 4{,}354 \text{ psi (30 MPa)}$$

Figure 3-15 **Simply Supported Plate**

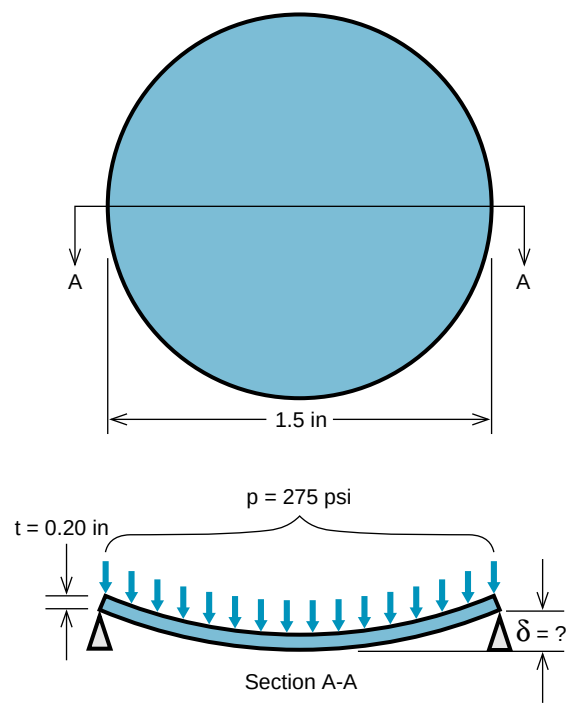

The stress result is needed in this case only to calculate the proper secant modulus. Because the resin is 30% glass reinforced, fiber orientation is considered. The gate at one end of the beam will align most of the fibers along the length of the beam, therefore, the curves in figure 3-5 apply. Reading from the 60°C curve at a stress of 4,354 psi (30 MPa) gives a strain of 1.3%. The secant modulus for this case is 4,354 psi / 0.013 = 334,923 psi.

Now solve the deflection equation using the secant modulus.

$$y = \frac{Pb(L^2-b^2)^{3/2}}{15.6EIL} = \frac{(250)(4)(10^2-4^2)^{3/2}}{(15.6)(334{,}923)(0.0689)(10)} = 0.214 \text{ inch}$$

For this special case, the maximum deflection does not occur at the point where the load is applied. It instead occurs at:

$$x_m = [(L^2-b^2) / 3]^{1/2} = [(10^2-4^2) / 3]^{1/2} = 5.29 \text{ inches from the left end of the beam}$$

Shear Stress on a Pin **Figure 3-16**

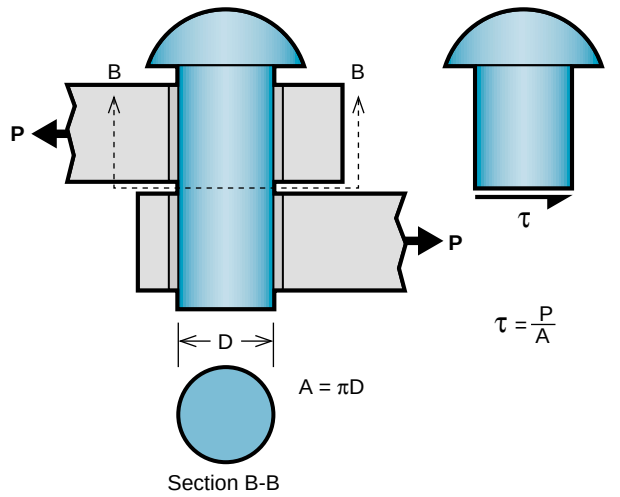

Example 3-3: Plate Deflection

Assume that the simply supported plate shown in figure 3-15 has a diameter of 1.5 inches and a thickness of 0.2 inches. A uniform load of 275 psi is applied in an ambient temperature of 104°F (40°C). Using the stress-strain curves for Makrolon polycarbonate resin, determine the deflection of the plate.

The maximum deflection (δ) and stress (σ) for this case can be calculated from the formulas:

$$\delta_{max} = \frac{3pr^4(5-4\nu-\nu^2)}{16Et^3}$$

$$\sigma = \frac{3pr^2(3+\nu)}{8t^2}$$

where:
p = applied pressure load (275 psi)
r = plate radius (0.75 inches)
ν = Poisson's ratio (0.38)
t = plate thickness (0.2 inches)
E = modulus of elasticity in psi

This pressure load will cause strain in the disk to exceed the proportional limit. In addition, the elevated-temperature condition rules out the use of the room-temperature Young's modulus. Therefore, first calculate the appropriate secant modulus to use in the deflection formula. Solving the stress equation yields:

$$\sigma_{max} = 3(275)(0.75)^2(3+0.38) / 8(0.20)^2$$
$$= 4{,}902 \text{ psi}$$

Using the 40°C isothermal stress-strain curve in figure 3-2, a 1.75% strain is found to correspond to a stress of about 4,900 psi. Dividing stress by strain gives a secant modulus of 280,000 psi. Solving the deflection equation using this modulus value gives:

$$\delta_{max} = \frac{3(275)(0.75)^4[5-4(0.38)-(0.38)^2]}{16(280{,}000)(0.20)^3}$$
$$= 0.0243 \text{ inches}$$

Using the room-temperature flexural modulus (330,000 psi) instead of the secant modulus at 40°C would have predicted a deflection of 0.0206 inches, an error of 15%.

Shear Stress

In tensile or compressive loading, the load is applied perpendicular to the cross section of interest. Shear stress is calculated by considering the stress on the cross section that lies in-plane or parallel to the load. The most common example of shear stress is the shearing of a bolt or pin as shown in figure 3-16. The load in the plates creates a shear stress on the cross section B-B equal to the load, P, divided by the cross-sectional area of the pin, A. Shear stress is denoted by the Greek letter τ. The units of shear stress (psi) are the same as for tensile or bending stress.

Torsion

Shear stress is the primary type of stress in parts that experience torsional or twisting loads. The stress formula for torsion is analogous to the bending-stress formula, $\sigma_b = Mc / I$. The bending moment is replaced with a twisting moment, T, and the moment of inertia is replaced by a polar moment of inertia, J. The distance c now represents the distance from the centroid of the section to the outer surface. This yields the following formula:

$$\tau = \frac{Tc}{J}$$

For the torsion problem the angle of twist, φ, is analogous to deflection. It is defined as:

$$\varphi = \frac{TL}{JG}$$

In this expression, L is the length of the shaft and G is the shear modulus of the material. Assuming linear elasticity, the shear modulus can be approximated from the tensile modulus and Poisson's ratio using the relation:

$$G \approx \frac{E}{2(1+\nu)}$$

The strain produced in torsion is a shear strain, γ. It can be related to tensile strain using the approximate relation:

$$\gamma \approx (1+\nu)\varepsilon$$

This equation is useful for converting permissible tensile-strain limits to permissible shear-strain limits. Lastly, for a circular cross section, the angle of twist in radians can be calculated given the shear strain and geometry by:

$$\varphi = 2\gamma L / d, \text{ (d = shaft diameter)}$$

Example 3-4: Torsion of a Round Shaft

A 0.2-inch-diameter, 0.5-inch-long, Makrolon polycarbonate shaft is part of a torsional latch. A torque of 5 inch-pounds is applied to activate the latch. Find the shear stress in the shaft and the resulting angle of twist.

The polar moment of inertia for the round cross section is:

$$J = \pi d^4 / 32 = (3.14)(0.2)^4 / 32 = 0.000157 \text{ inch}$$

For this case, c = d / 2, or 0.1 inch. The maximum shear stress in the shaft is then:

$$\tau = Tc / J = (5)(0.1) / (0.000157) = 3{,}185 \text{ psi}$$

To find the angle of twist, we need G, and therefore E. Combining the relations for G and γ and replacing the moduli with their stress/strain definitions gives the relation: $\sigma \approx 2\tau$. This allows us to calculate secant modulus from the tensile stress-strain curve with a stress value of 2 times τ, or 6,370 psi. Using the 23°C curve in figure 3-2 gives a secant modulus of about 6,370 psi / 0.023 = 277,000 psi.

$$G \approx E_s / [2(1+\nu)] \approx 277{,}000 / [2(1+0.38)] \approx 100{,}362 \text{ psi}$$

The calculated angle of twist is then:

$$\varphi = TL / JG = (5)(0.5) / [(0.000157)(100{,}362)] = 0.159 \text{ radians} = 9.1 \text{ degrees}$$

Note that the conversion factor between radians and degrees is 180/π.

Crown Height vs. Stiffness **Figure 3-17**

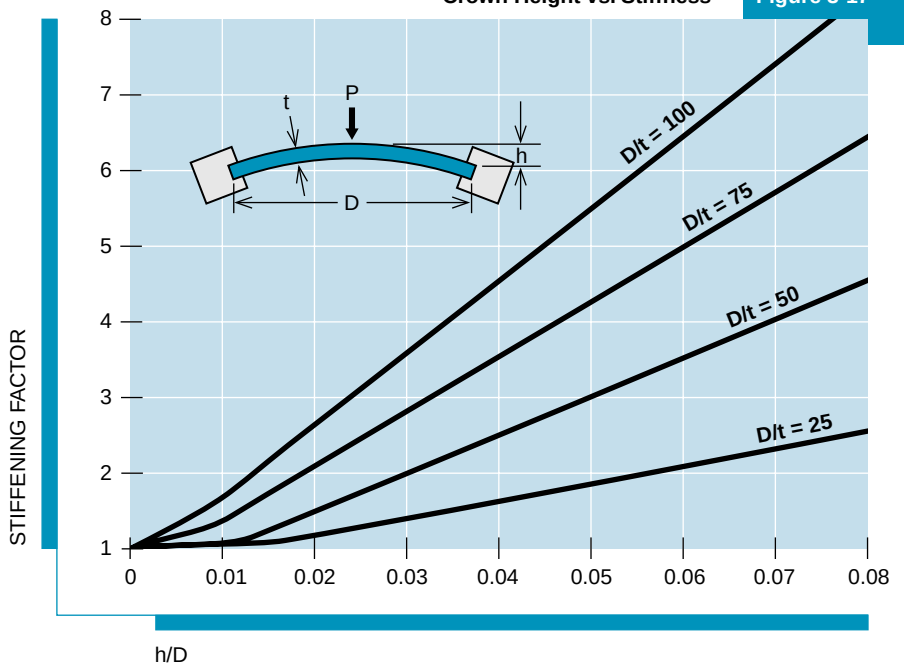

DESIGNING FOR STIFFNESS

You can use a variety of options to improve part stiffness including overall shape, wall thickness, ribs, and material selection. This section will discuss these and other options.

Part Shape

In many applications, the overall part shape is the predominant design factor affecting part stiffness and load-carrying capabilities. Taking steps early in the design stage to select a good basic shape can avoid expensive and/or troublesome measures later in the product development to achieve the desired strength and stiffness. Selecting inherently stiffer shapes seldom adds significantly to the final part costs.

Take advantage of the design flexibility in the molding process to maximize the stiffness of your design. Consider crowns or corrugations for large surfaces. Flat surfaces lack inherent stiffness.

Crowns round the surface to form a slightly domed shape that adds considerable stiffness with little additional material. Figure 3-17 shows the effect of crown height on stiffness in a circular disk rigidly supported at the perimeter. The graph shows relative stiffness — stiffness domed divided by stiffness flat — plotted against the ratio of dome height to disk diameter. The different curves represent disk-diameter-to-disk-thickness ratios. For the example of a 10-inch-diameter disk with a 0.100-inch wall thickness, we see that adding a 0.25-inch dome increases the stiffness by about 300%.

Figure 3-18 **Corrugation**

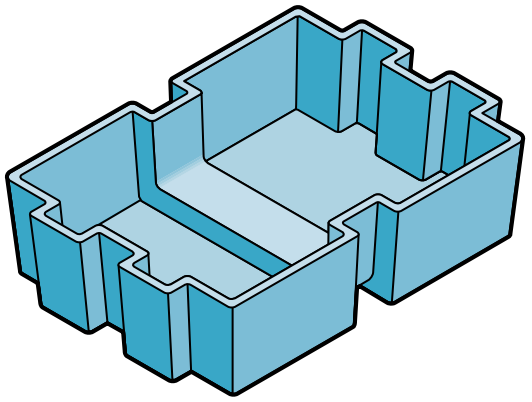

Corrugations can add stiffness to noncosmetic parts.

Figure 3-19 **Curved Side Walls**

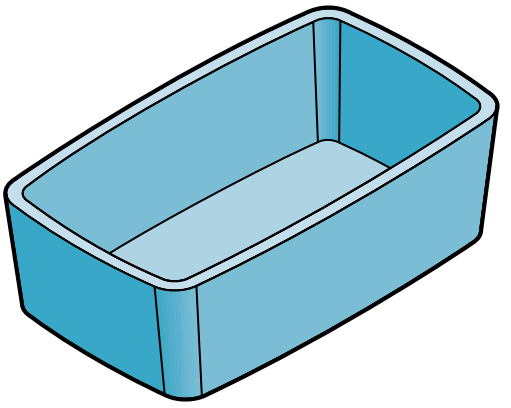

Adding curvature to the sidewalls enhances stiffness and appearance.

Noncosmetic parts frequently rely on corrugations to increase stiffness and distribute loads (see figure 3-18). The height and spacing of corrugated features can be adjusted to achieve the desired stiffness. Cosmetic parts usually must disguise corrugations as styling features. Corrugation features usually avoid the filling and read-through problems sometimes encountered with reinforcing ribs.

Long, unsupported edges, such as those on the sidewalls of box-shaped parts, exhibit low stiffness. They also tend to warp during molding. Adding curvature to the sidewalls (see figure 3-19) increases stiffness and reduces the hourglass-shaped warpage common in box-shaped parts. Design permitting, strengthen unsupported edges with a stiffening profile (see figure 3-20), preferably a straight-draw profile that maintains uniform wall thickness and molds without side-action mechanisms.

When possible, use other components of the assembly to provide additional stiffness. Plastic housings often contain rigid internal components, such as cooling fans, metal shields, and heat sinks, which could add support to load-bearing surfaces.

Stiffening Profiles for Edges **Figure 3-20**

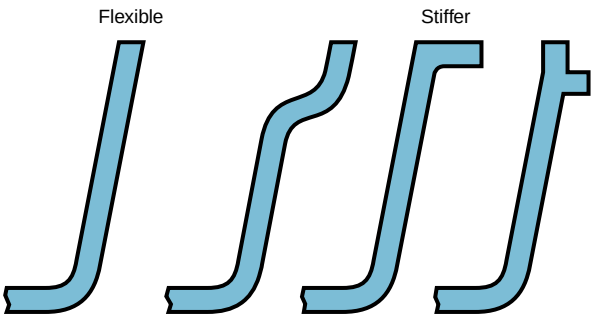

Stiffening profiles increase the stiffness of sidewalls and edges.

Typically, plastic parts perform better in compression than in flexure or tension. To maximize part stiffness, design the nonappearance, bottom half of an assembly with hollow towers, center walls, or ribs that add support to the underside of the upper half.

Generally difficult to mold via conventional methods, hollow profiles can provide high levels of stiffness. Until recently, manufacturability and economic considerations have made full-scale production of high-quality plastic hollow parts difficult. The **lost-core process**, used to manufacture the engine manifold part shown in figure 3-21, employs a sacrificial, low-melt temperature core to mold intricate hollow shapes. The hollowed sections function both as air ducts and as stiffening members that withstand the loads and vibrations of the application. Another process for producing similar hollow parts, the **multi-shell process**, forms hollow shapes from separately molded parts, which are joined later by welding or overmolding.

In **gas-assist molding**, a growing technology, high-pressure gas is injected into the melt stream behind the flow front to produce hollow sections. This process can create networks of hollow channels for stiffening (see figure 3-22). The hollow channels can augment stiffness in weak areas such as unsupported edges or provide major support in areas subject to high loads.

Figure 3-21 **Hollow-Shaped Parts**

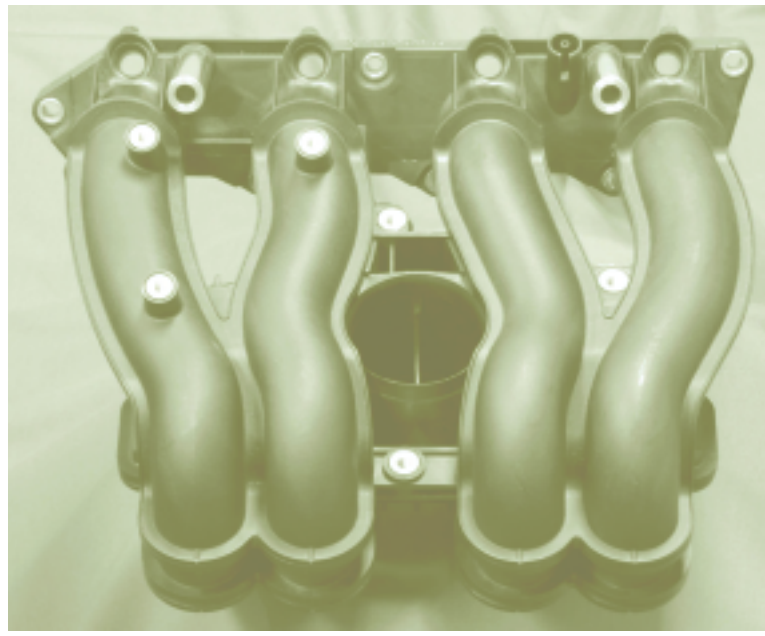

The hollow shape of this lost-core manifold adds both function and high rigidity.

Figure 3-22 **Gas-Assist Channels**

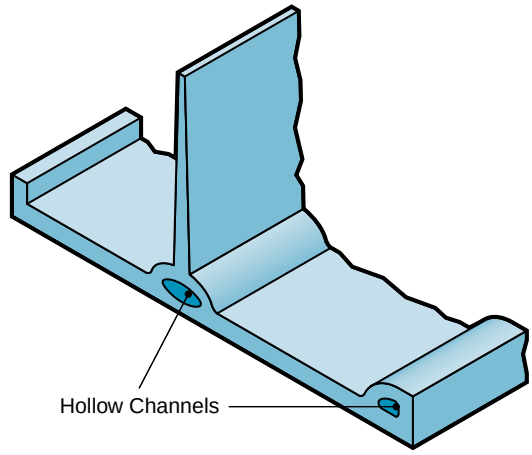

Gas-assist channels add stiffness to unsupported edges and load-bearing areas.

Wall Thickness

Because stiffness is proportional to thickness cubed, relatively small increases in thickness can reduce deflection greatly. A 25% increase in thickness nearly doubles the stiffness of a simple plastic surface. While adding wall thickness to improve stiffness is a simple solution, it is not always practical. Although they generally offer excellent strength-to-weight performance, most parts made of plastic would have to have wall thicknesses several times greater than other common structural materials to achieve the same stiffness without geometry changes.

In reality, molding and economic factors limit the available wall thickness range for stiffening. Molding-related issues, such as shrinkage stress, packing difficulties, and cycle times, typically set practical thickness limits well below 0.25 inches for most solid thermoplastics. Because good molding practice calls for a uniform thickness throughout a part, a local need for additional stiffness often results in an overall thickness increase, adding both part weight and cost.

Table 3-6 **Equivalent Thickness**

Material Replacing Steel	Flexural Modulus (10^6 psi)	Equivalent Thickness Factor (ETF)
Lustran ABS	0.38	4.2
Makrolon PC	0.33	4.4
Bayblend PC/ABS	0.36	4.3
Makroblend PC Blend	0.34	4.4
Durethan PA 6 (30% GF)	0.73	3.4
Aluminum	10.0	1.4
Steel	29.0	1.0

This table shows how many times thicker than steel various materials would need to be to yield the same deflection under a given load. The ETF assumes a flat shape and short-term loading at room temperature.

Table 3-6 shows the wall-thickness relationships between various materials and steel to give the same deflection for a given load. The equivalent-thickness factor (ETF) listed in this table assumes a flat shape and short-term loading at room temperature. The table shows that, to have the same stiffness, a flat shape would need to be 4.4 times thicker in polycarbonate than in steel.

To estimate the equivalent thickness of other materials or material combinations, solve the following equation:

$$t_{equivalent} = t_{current}(E_{current} / E_{proposed})^{1/3}$$

where t is thickness and E is the appropriate flexural or tensile modulus.

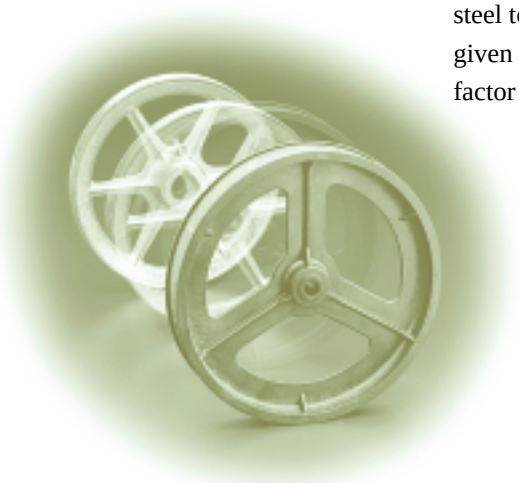

Example 3-5: Equivalent Thickness

If an existing aluminum part is 0.030-inch thick ($t_{current}$), what thickness ($t_{proposed}$) does an identical part made of a 50% glass-filled polyamide 6 need to be for equivalent flexural rigidity? The flexural modulus of aluminum is 10,000,000 psi ($E_{current}$). The flexural modulus of a 50% glass-filled polyamide 6 is 1,116,000 psi after conditioning ($E_{proposed}$).

$$t_{equiv} = 0.030(10{,}000{,}000 / 1{,}116{,}000)^{1/3}$$
$$= 0.062 \text{ inch}$$

The equivalent thickness (t_{equiv}) equals 0.062 inch. Depending upon your application, you should apply a suitable safety factor.

Calculations of equivalent thickness for long-term loads or loads at temperatures other than room temperature should substitute the appropriate creep-modulus or secant-modulus values for the current and proposed materials.

Figure 3-23 **Doubling Stiffness**

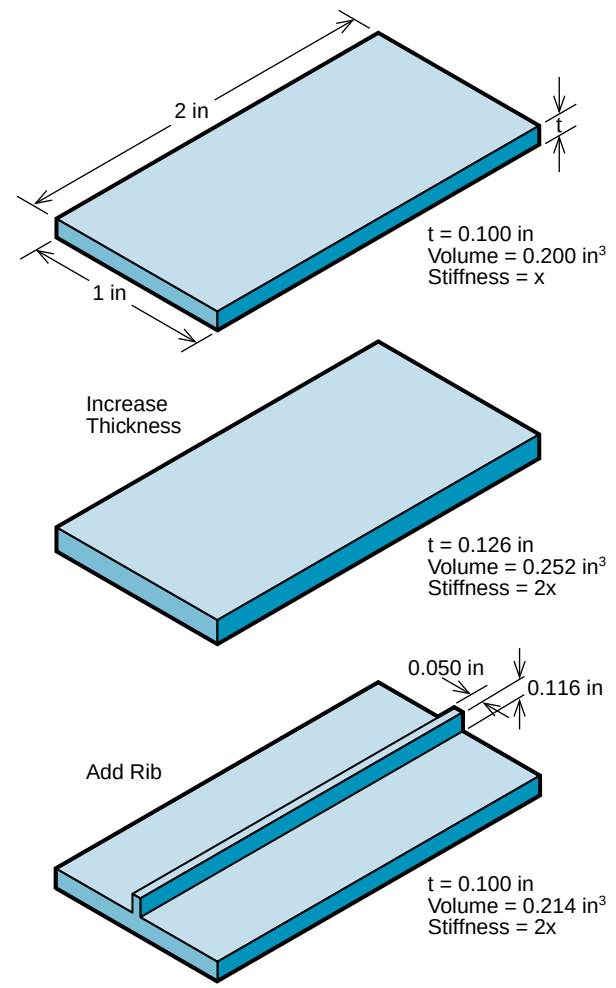

In this example, adding a rib to double stiffness increases part volume by only 7% as compared to 25% when the part thickness is increased.

Ribs

Ribs provide a means to increase stiffness without increasing wall thickness. Figure 3-23 shows the relative amount of material needed to double the stiffness of a flat part, both by increasing thickness and by adding ribs. Adding a rib doubles the part stiffness with much less material than simply increasing the part thickness. Because they are usually thinner than the main-wall sections, ribs seldom add to the molding-cycle time. Ribs also add stiffness selectively in specific areas and directions. Plastic part designs often require ribs to strengthen and stiffen structural elements such as hinges, attachment features, and load points.

Bidirectional ribs stiffen surfaces subjected to pure deflection or sagging-type loading. Parts subjected to both bending and twisting loads, such as chair star bases, need diagonal-rib patterns (see figure 3-24). Figure 3-25 shows a common diagonal-rib design for chair base members. The deep U-shape provides primary strength and stiffness. The deep diagonal ribs add torsional support and resist buckling in the U-channel. The rib thickness is a compromise between what is needed for mold filling and strength, and the maximum thickness that will produce a cosmetically acceptable part. Overly thick ribs can lead to read-through on the cosmetic upper surface. For this reason, limit rib thickness to about 1/2 the nominal part thickness.

Figure 3-24 **Chair-Base Ribs**

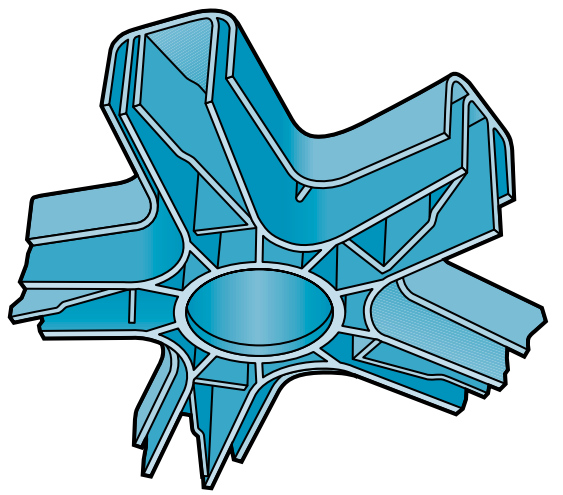

The U-shaped sections with deep diagonal ribs provide the strength and stiffness required for chair bases.

Two factors determine the performance of ribbed structures: the moment of inertia (I), which indicates resistance to bending; and the section modulus ($Z = I / c$), which reflects centroid-normalized resistance to bending. Ribs increase the moment of inertia of plate structures subjected to bending loads thereby increasing stiffness.

The rib's moment of inertia is proportional to its height cubed, and linear to the width (for a rectangular section, $I = bh^3 / 12$). Because of this property, tall ribs add greater stiffness and rigidity than short ribs. Ribs that are too tall can cause difficulties: when the edge of ribs lies too far from the section's center of gravity, the resulting outer-fiber stress can exceed material limits, reducing strength in spite of an increase in stiffness.

Figure 3-25 **Diagonal Ribs**

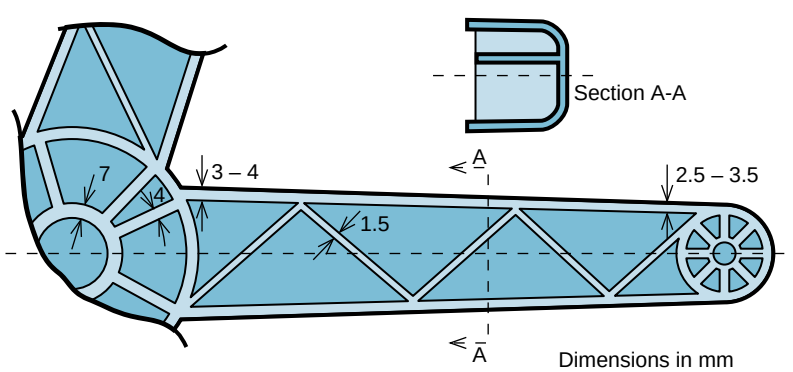

Typical rib design for chair-base applications.

Replace tall ribs with multiple, shorter ribs to reduce stress to acceptable levels while maintaining required stiffness. The three rib options in figure 3-26 provide roughly the same rigidity. Option A is too thick and will lead to sink on the opposite surface. Option B is too tall and may see excessive stress along the rib edge. The pair of ribs in option C represents a good compromise between strength, stiffness, and moldability. When designing ribbed structures, consider the moldability guidelines for ribs outlined in Chapter 2.

LONG-TERM LOADING

Generally, long-term loading is either a constant applied load or a constant induced strain. Plastic parts subjected to a constant load, such as pressure vessels or structures supporting weight, tend to creep and show increased deformation over time. Other design elements, such as a press-fit boss or spring finger, undergo continuous, fixed deformation or strain. These features stress relax over time and show a loss in retention force. See the *Long-Term Mechanical Properties* section in this chapter for an explanation of creep and stress relaxation.

Creep data, such as isochronous stress-strain curves, provide a means for predicting a material's behavior.

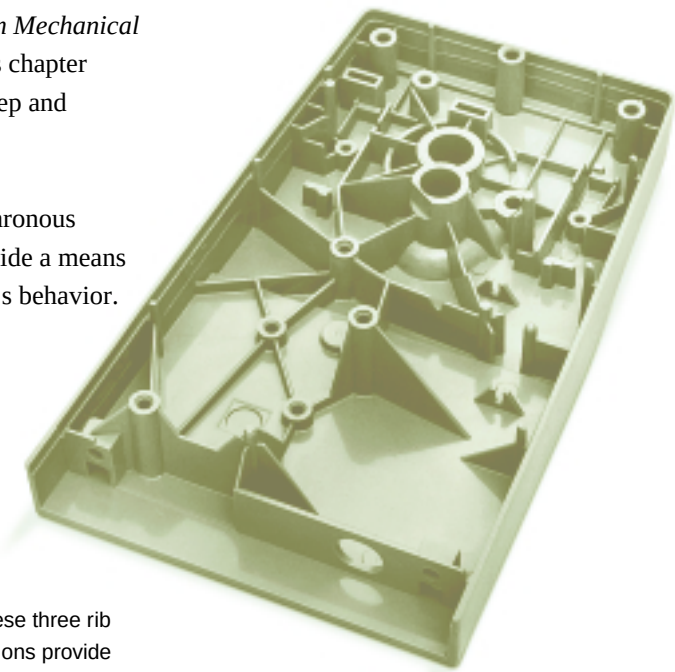

Equivalent Ribs **Figure 3-26**

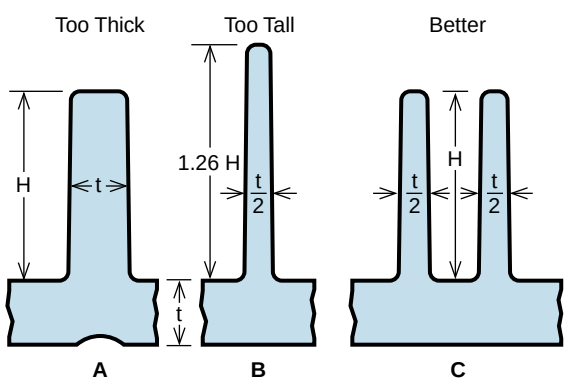

These three rib options provide roughly the same rigidity for a vertical load. Multiple ribs often provide better performance than single ribs that are either too thick or too tall.

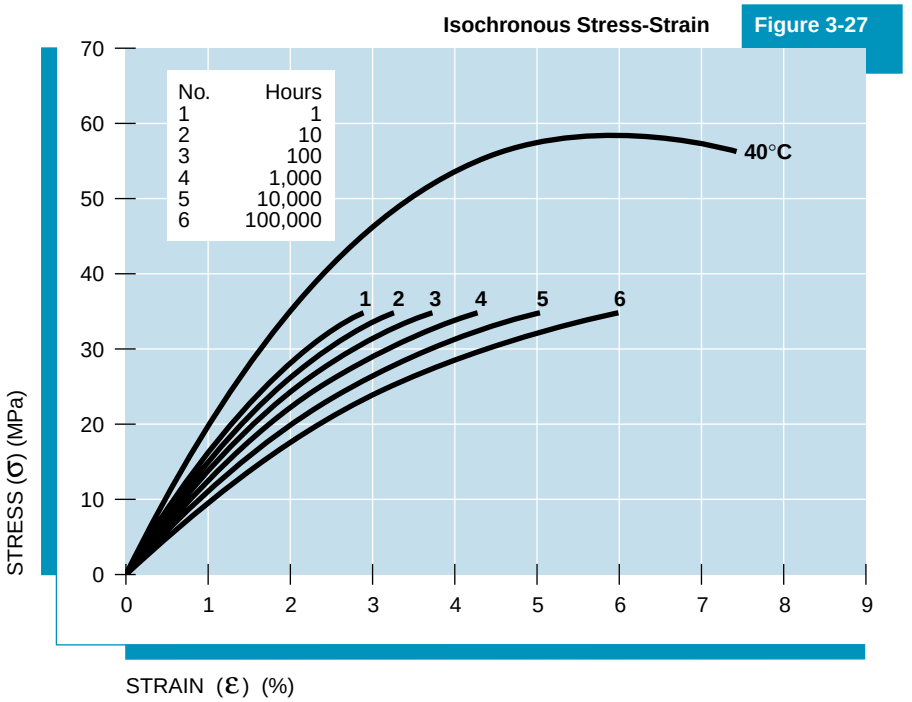

Isochronous stress-strain curve for Makrolon PC at 40°C.

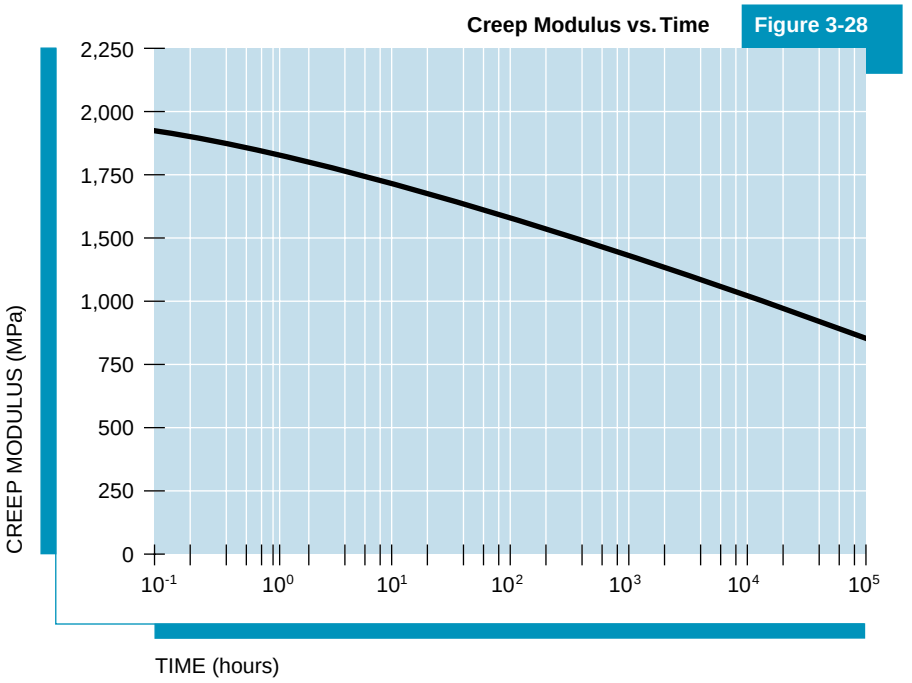

Creep modulus for Makrolon PC at 40°C. Creep (apparent) modulus decreases over time, but the actual modulus remains constant.

Figure 3-27 shows a typical set of time-dependent curves at 40°C for Makrolon 2800-series polycarbonate resins. Each curve represents the material behavior for different loading durations. To predict creep, substitute an apparent modulus for the instantaneous elastic or Young's modulus in structural calculations.

Many people confuse actual modulus and creep modulus. Except for environmental effects the material's elasticity does not decrease over time; nor does its strength. Because of viscoelasticity, deformation occurs over time in response to a constant load. While the instantaneous tensile modulus of the material remains constant, the apparent modulus decreases over time (see figure 3-28). We use this hypothetical, time-dependent creep modulus to predict the amount of sag or deformation that occurs over time.

Stress relaxation is the decrease in stress that occurs in a material that is subjected to constant, prolonged strain at a constant temperature. Measuring stress relaxation involves varying the load over a period of time to maintain a constant strain rate. This test is more difficult than the test for creep that measures the change in deflection over time in a specimen under constant stress. For this reason, creep curves are often used to calculate stress relaxation, generally resulting in a ±10% margin of error.

To find the apparent modulus from isochronous strain-strain data, divide the calculated stress by the corresponding strain on the curve for the selected load duration. For example, if a flat part made of polycarbonate at 40°C (see figure 3-27), has a tensile stress of 2,900 psi (20 MPa) and a load duration of 1,000 hours, you can calculate an apparent modulus of 166,000 psi from the isochronous stress-strain curve. Significantly lower than the instantaneous value of 350,000 psi, this lower apparent modulus will account for the added deflection that occurs because of creep when it is substituted into deflection calculations.

For a given strain, read vertically through the isochronous stress-strain curves to predict the effects of stress relaxation. Again, using the curves in figure 3-27, you can see that for an applied strain of 2%, the tensile stress drops from an instantaneous value of 5,072 psi (35 MPa) to approximately 2,900 psi (20 MPa) after 10,000 hours.

Example 3-6: Plate Deflection Considering Creep

Find the deflection in the circular plate of example 3-3 after 10,000 hours. The geometry and loading are shown in figure 3-15.

As in the short-term case, the first step is to calculate the stress. Because the stress calculation does not depend on modulus, the result is the same as in example 3-3:

$$\sigma_{max} = 4{,}902 \text{ psi}$$

To find the appropriate modulus value requires a set of isochronous stress-strain curves at 40°C as shown in figure 3-27. On the 10,000 hour curve, a stress of 4,900 psi corresponds to roughly 5% strain. Calculate the apparent (creep) modulus by dividing stress by strain. Use the result of 98,000 psi to calculate the actual deflection after 10,000 hours.

$$\delta_{max} = \frac{3pr^4(5-4\nu-\nu^2)}{16\mathbf{E_{creep}}t^3}$$

$$= \frac{3(275)(0.75)^4[5-4(0.38)-(0.38)^2]}{16(98{,}000)(0.20)^3}$$

$$= 0.0694 \text{ inches}$$

The deflection at 10,000 hours is nearly triple the instantaneous value of 0.0243 inches!

Example 3-7: Stress Relaxation

A permanently deflected polycarbonate cantilever snap arm is used to hold a metal part in position. The arm is 1-inch long, 0.080-inch thick and 0.25-inch wide. The deflection of the arm is 0.1 inch. What is the instantaneous retention force of the arm? After one month (~10^3 hours)? After one year (~10^4 hours)? After six years (~6 x 10^4 hours)?

Table 3-7

Time (Hours)	σ (psi) at 1.2% Strain	E_r (psi)	Retention Force (Pounds)
10^{-1} (6 Min)	3,750	312,500	1.00
10^3 (1 Month)	2,800	233,333	0.75
10^4 (1 Year)	2,500	208,333	0.67
6 x 10^4 (6 Years)	2,200	183,333	0.59

First, find the strain level in the arm from the formula shown below. This can be derived from $y = PL^3 / 3EI$ (Table 3-5) and letting $E = \sigma_b / \varepsilon$.

$$\varepsilon = \frac{3yh}{2L^2} = \frac{3(0.1)(0.08)}{2(1.0)^2} = 1.2\% \text{ strain}$$

Now, using figure 3-10, find the stress corresponding to 1.2% strain on the desired time curves. Then calculate the relaxation modulus ($E_r = \sigma / 0.012$) and find the retention force using $P = 3E_rIy / L^3$. The results are shown in Table 3-7.

Note that the drop off in retention force is proportional to the drop in stress. For a given strain, the stress drops a similar amount during each logarithmic increase in time period. The initial retention force drops by 25% in the first month, then by an additional 16% over the next six years. For this reason, designs that rely on such retention forces are not recommended in thermoplastics.

Brittle and Ductile Behavior **Figure 3-29**

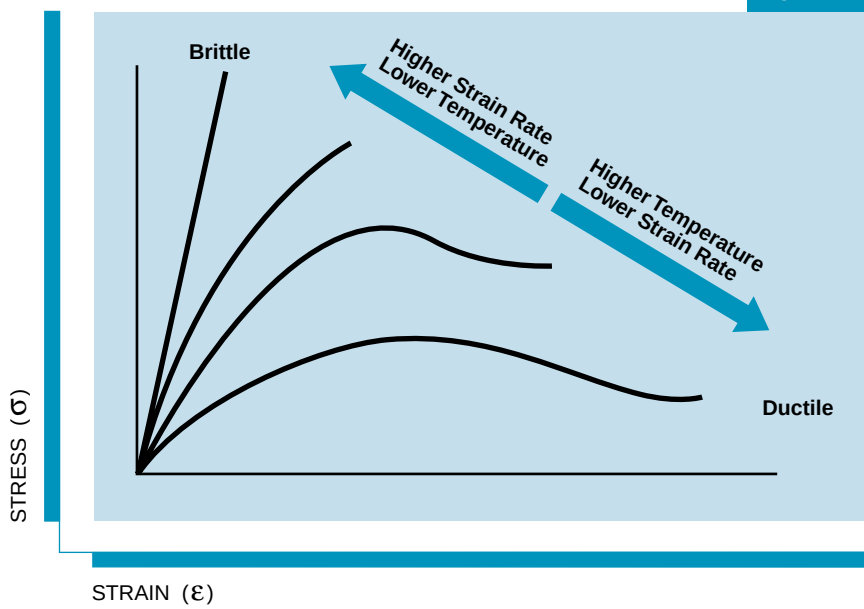

Effects of strain rate and temperature on material behavior.

DESIGNING FOR IMPACT

As discussed earlier in this chapter, load duration and ambient temperature affect the mechanical performance of plastic parts and must be addressed in part design. Plastic parts designed for impact must also consider the effect of strain rate or rate of loading on mechanical behavior. As figure 3-29 shows, plastics become stiffer and more brittle at high strain rates and low temperatures. If your part will be exposed to impact strains, address energy management issues early in the design process, including:

- Stress concentration;
- Energy dissipation; and
- Material impact properties.

As ambient temperature increases, materials become more ductile. The yield strength decreases, but the strain-at-break value increases. Although a part will be less rigid at elevated temperatures, it may have better impact properties, because it can absorb more energy before failing.

Avoid stress concentrations. While this is an important goal in good design practice, it becomes of paramount importance in impact applications. An impact causes a high energy wave that passes through the part and interacts with its geometry. Design features such as sharp corners, notches, holes, and steps in thickness can focus this energy, initiating fracture. As corners or notches become sharper, the part's impact

performance will diminish. Figure 3-30 shows the effect of notch radius on the Izod impact performance of unfilled polycarbonate resin. Increasing the notch radius from 0.005 to 0.010 inch increases the Izod impact strength by about 400%. Therefore,

- Round inside corners and notches to reduce stress concentrations.

Look for potential problems from sources other than part design, such as post-molding operations. Machining, for instance, can leave deep scratches, microcracks and internal stresses leading to stress concentrations.

Position gates and knit lines in areas that will not be subjected to high impact forces. The area around gates generally has higher levels of molded-in stress. In addition, improper gate removal can leave rough edges and notches. Knit lines typically exhibit lower strength than other areas and can concentrate stresses along the fine V-notch that forms the visible knit lines.

Designers often attempt to enhance impact performance by adding ribs or increasing wall thickness. While this can sometimes work, stiffening the part in this way can often have the opposite effect. For example, increasing the part thickness beyond the critical thickness can lead to brittle failure, and adding ribs can introduce stress-concentration points that initiate cracks and part failure.

Often a better strategy is to design the part to flex, so it can absorb and distribute the impact energy. In some instances, this can involve reducing thickness and removing or redistributing ribs to accommodate controlled flexure. Consider the following rules of thumb to improve impact performance:

- If using multiple ribs, space them unevenly or orient them to prevent resonance amplification from the impact energy;
- Avoid boxy shapes that concentrate impact forces on rigid edges and corners; and
- Use rounded shapes to spread impact forces over larger areas.

When selecting a plastic material for impact applications, consider the following design tips:

- Select a material with good impact performance throughout the part's working-temperature range;
- Address all temperatures and impact loads including those found in the manufacturing process and shipping;
- Consider notch sensitivity of the material in applications with unavoidable notches and stress concentrators; and
- Check flow orientation — especially in fiber-filled materials — and the difference between flow and cross-flow mechanical properties.

Stress Concentration **Figure 3-30**

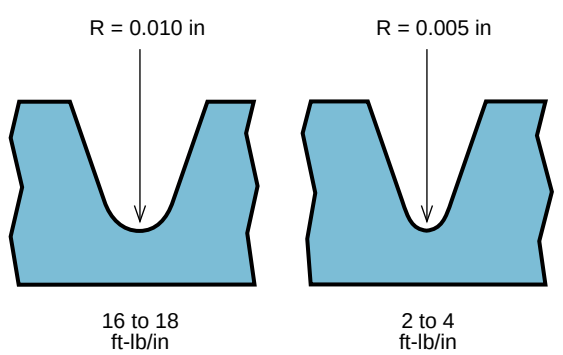

Effect of notch radius on the Izod impact strength of polycarbonate.

The complex nature of plastic performance in impact has led to the development of a variety of impact tests in an attempt to predict material performance in different impact modes. Despite the many specialized tests, material impact data are difficult to relate to actual part performance, and nearly impossible to apply quantitatively with good accuracy. Use test data only for general comparisons of material impact performance or to screen potential materials. Always prototype test your final material in actual, in-use environments. See the Bayer publication *Material Selection* for more information on impact properties.

FATIGUE APPLICATIONS

Fatigue can cause rigid plastic parts exposed to cyclic loading to fail at substantially lower stress or strain levels than parts made of the same material under static loading. Consider fatigue endurance in applications or features subjected to heavy vibrations or repeated deflections such as snowplow headlight assemblies, one-piece salad tongs, and high-use snap-latch closures. In areas subjected to fatigue, avoid stress concentrators, such as holes, sharp corners, notches, gates, knit lines, and thickness variations. Optimize the design to distribute deflection over large areas.

The type and severity of fatigue loading determines which material fatigue data applies. A reduced, single-point, allowable strain limit may suffice in a simple, snap-latch arm subjected to few deflections over the product life. Calculations for parts subjected to many deflections and temperature extremes may require data of the type shown in figure 3-13 in the fatigue properties section of this chapter. These curves show the stress and strain limits at various temperatures for parts subjected to dynamic loading. Reversing loads place more severe demands on plastic parts. Fatigue data in the form of S-N curves (see figure 3-12) show the number of cycles until failure for different cyclic, reversing-load modes.

Many factors affect fatigue performance including notch effects, temperature, loading frequency, fatigue mode, and part geometry. Generally scarce, fatigue data is seldom available for the precise conditions of your application. For this

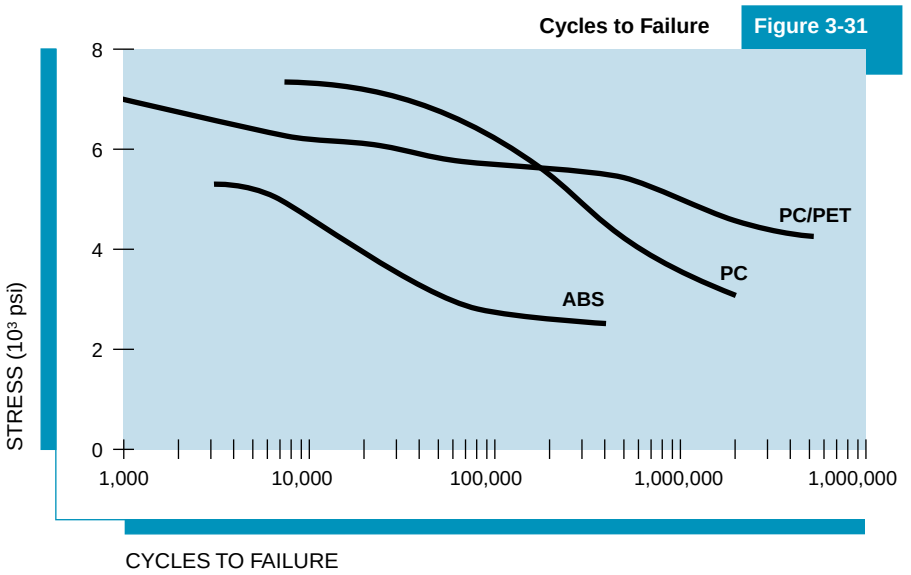

Fatigue performance for representative grades of ABS and PC plotted with data for Makroblend UT-1018 PC/PET resin.

reason, it is difficult to predict fatigue performance quantitatively. Design efforts in fatigue applications generally focus on the following:

- Using available data to select a suitable, fatigue-resistant resin; and
- Reducing stress and strain levels as much as possible.

Often you must screen your material choices based on general fatigue data of the type shown in figure 3-31.

Sharp inside corners act as stress concentrators, and can lead to much higher stress levels than those indicated by standard formulas. Figure 3-32 shows the effects of a fillet radius on stress concentration in a snap-arm member. As the ratio of root radius to beam thickness becomes less than about 0.2, the stress concentration factor climbs quickly to much higher values. To avoid fatigue failures at inside corners, select the largest fillet radius the design can tolerate without excessive sink and packing problems. Typically fillet radii of 0.015 to 0.030 inch provide a good compromise between fatigue performance and part moldability.

Fillet Radius and Stress Concentration **Figure 3-32**

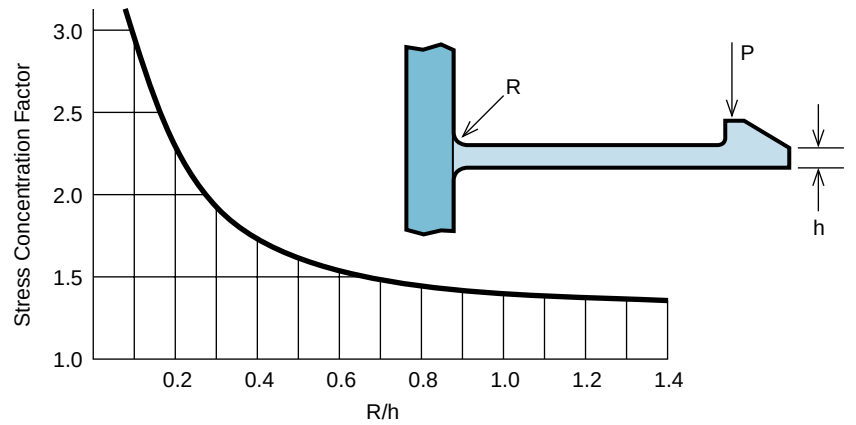

Effects of a fillet radius on stress concentration.

THERMAL LOADING

Coefficient-of-linear-thermal-expansion (CLTE) values for plastics vary widely and are generally much higher than those for metals (see table 3-8). When designing parts that will be exposed to a range of temperatures, you must account for the expansion differences between materials.

Figure 3-33 gives an example of a long gauge housing made of aluminum with a polycarbonate impact shield rigidly attached at both ends, with screws placed ten inches apart. This gauge has an in-use temperature range from 20° to 120°F. When assembled at room temperature and then heated to the upper temperature limit, the polycarbonate shield will expand much more than the aluminum housing. This expansion equals the difference in the CLTE for the two materials, multiplied by the temperature difference and the part length.

$$\Delta L = (\alpha_{plastic} - \alpha_{metal}) \cdot \Delta T \cdot L$$
$$= (3.9-1.3) \times 10^{-5} \cdot (120-70) \cdot 10$$
$$= 0.013 \text{ inch}$$

This expansion variation causes the polycarbonate shield to compress, making the part bow. Cooling the assembly by 50°F to its lower limit would cause the polycarbonate shield to shrink 0.013 inches if the ends were not fixed. Because they are fixed, the shield effectively stretches 0.013 inches, resulting in an overall applied strain equal to the deflection divided by the length between the screws, expressed as a percentage:

$$\text{applied strain} = (0.013 / 10.00) / 100$$
$$= 0.0013 = 0.13\%$$

The difference in thermal expansion induces strain in the polycarbonate shield. This induced stress is amplified at the mounting holes, which act as stress concentrators.

Table 3-8 Coefficients of Linear Thermal Expansion (CLTE) for Common Materials

Material	in/in/°Fx10^{-5} (mm/mm/°Cx10^{-5})
Glass	0.5 (0.9)
Steel	0.8 (1.4)
Composite RIM	0.8 (1.4)
Brass	1.0 (1.8)
Aluminum	1.3 (2.3)
Nylon GF*	1.3 (2.3)
Polyester GF*	1.4 (2.5)
PPS GF*	1.5 (2.7)
Polycarbonate GF*	1.7 (3.0)
ABS GF*	1.7 (3.0)
Polypropylene GF*	1.8 (3.2)
Acetal GF*	2.5 (4.5)
Acrylic	3.8 (6.8)
Polycarbonate	3.9 (7.0)
PC/ABS Blend	4.0 (7.2)
Elastomeric RIM GF*	4.0 (7.2)
Nylon	4.5 (8.1)
ABS	5.0 (9.0)
Polypropylene	5.0 (9.0)
Acetal	5.8 (10.4)
Polyester	6.0 (10.8)
Polyethylene	7.0 (12.6)
Elastomeric RIM Unfilled	7.8 (14.0)

*glass-filled resins

Thermal Expansion **Figure 3-33**

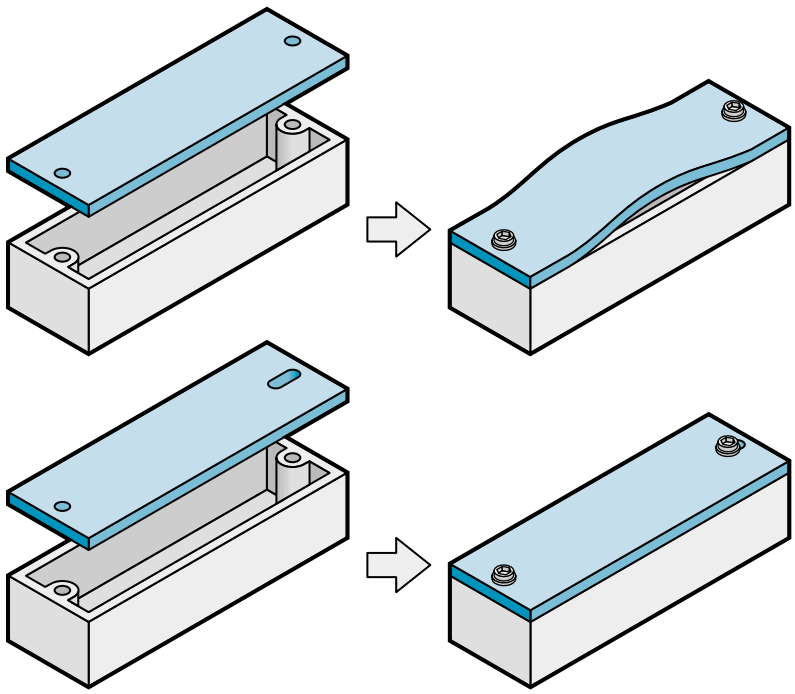

The slotted hole and sliding attachment at one end of the plastic cover in the lower assembly enable it to accommodate the thermal expansion difference with the metal base.

To avoid the problem, choose an attachment method that allows the plastic component to slide relative to the other material. In the aforementioned example, affix a screw to one end of the shield and design a slotted screw hole on the other end to accommodate expansion and contraction. Refer to the *Joining Dissimilar Materials* section of Bayer's *Joining Techniques, A Design Guide* for more information.

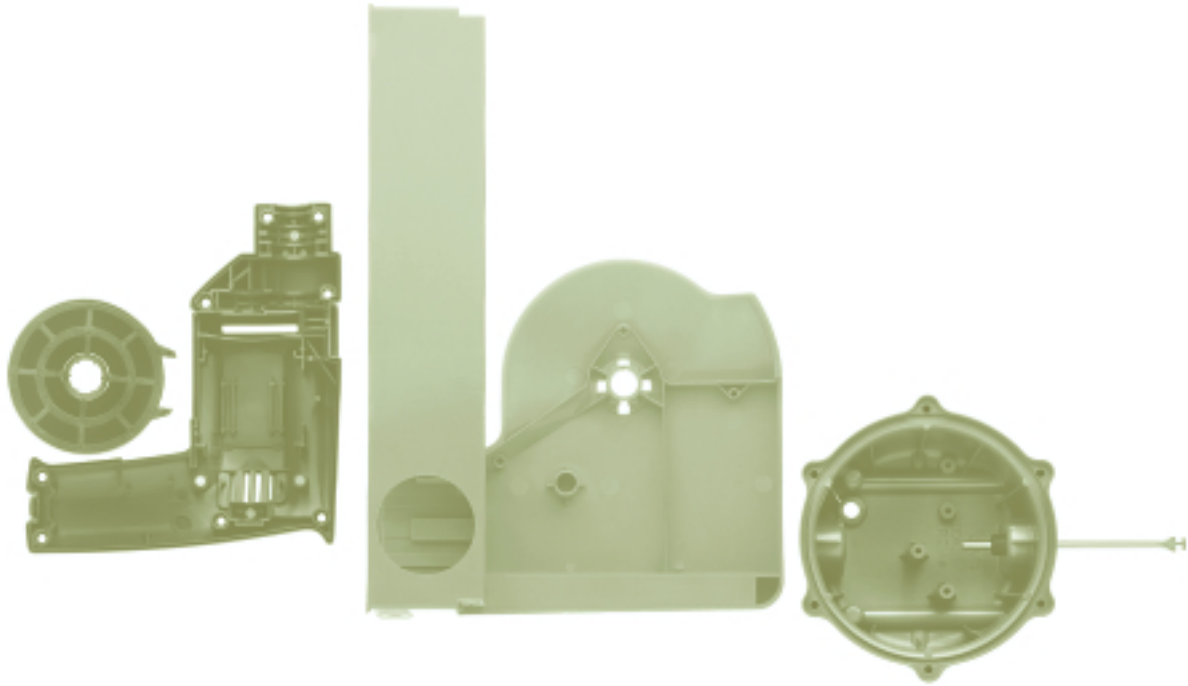

Chapter 4

DESIGN FOR ASSEMBLY

Virtually every finished part requires some assembly: mechanical fasteners, welding, bonding, snap-fit joints, or other joining techniques. These methods and their design implications are discussed in this chapter.

Optimizing part assembly should begin with the concept stage and continue through product development and production. At each stage look for opportunities to simplify and improve the assembly. Consider consolidating parts, reducing fastener and assembly steps, improving automation, and selecting other assembly methods. Well-designed parts include features to ease assembly and assure correct positioning and orientation. In addition to cost and quality concerns, the optimization process should address disassembly for repair and recycling. Good communication and cooperation between the various design and engineering disciplines is essential. This chapter addresses assembly primarily as it relates to thermoplastic part design. For more specific information about various joining techniques and guidelines for their use with Bayer resins, please request a copy of Joining Techniques *and/or* Snap-Fit Joints *for Plastics from your Bayer representative.*

Gear-to-Shaft Attachment Options **Figure 4-1**

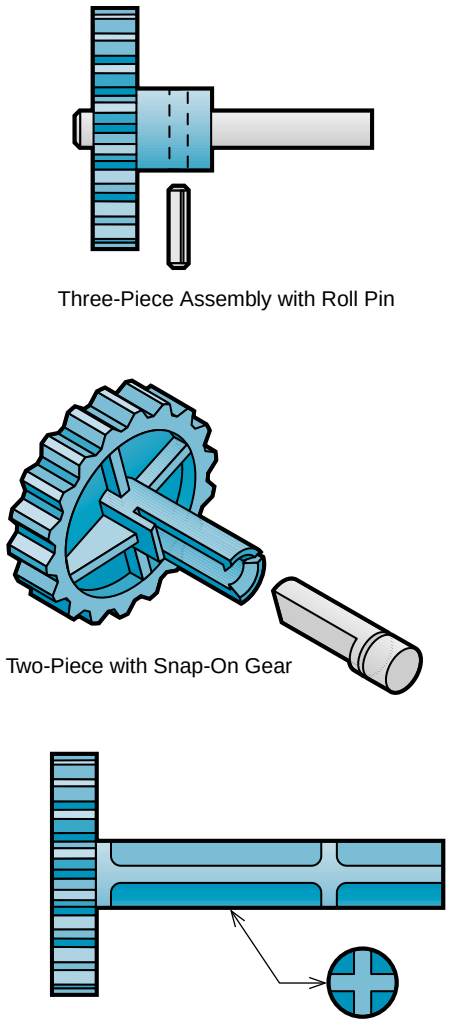

PART CONSOLIDATION

To lessen the need for fastening hardware and reduce the number of assembly operations, consider consolidating the number of parts in a given design. Closely scrutinize your total design for opportunities to combine function and reduce final assembly count. By way of example, figure 4-1 shows several options for attaching a gear to a shaft: a three-piece design, featuring a shaft, gear, and roll pin; a two-piece, snap-on gear design; and a one-piece shaft and gear design that needs no assembly. A variety of factors — including required strength, wear properties, and moldability — determine which of these design options is most feasible.

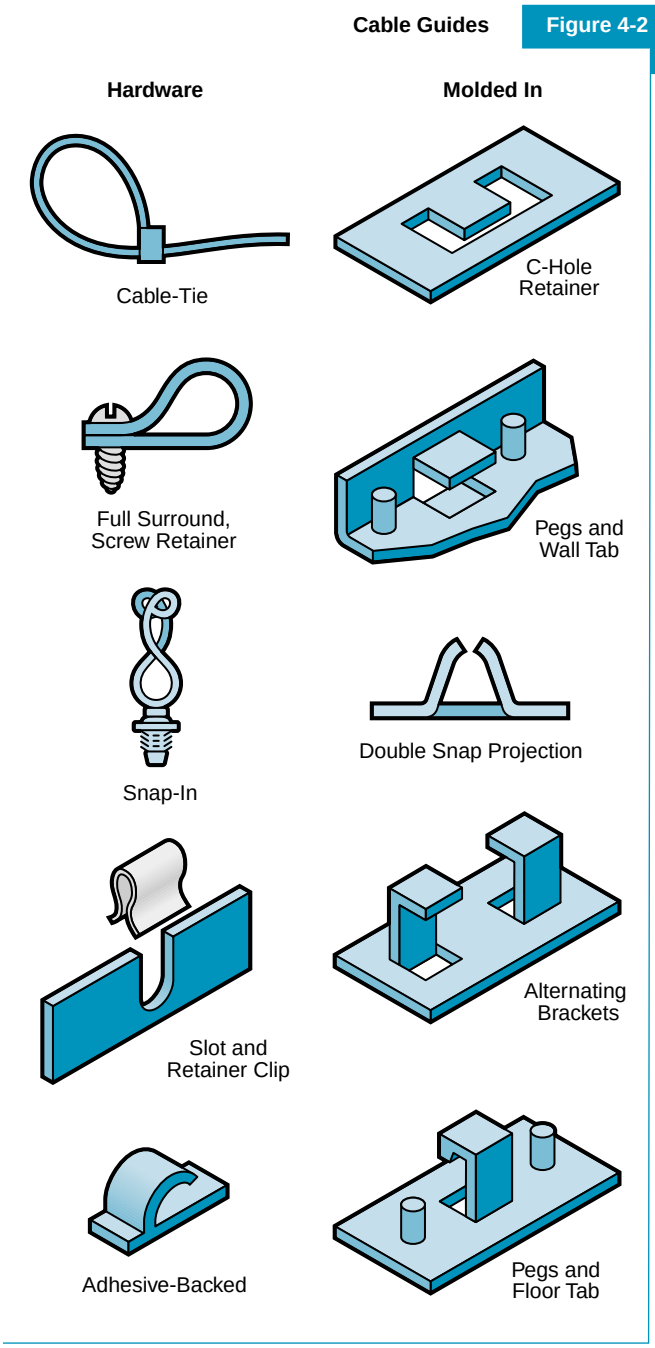

Molded-in features can replace cable-guide hardware.

Consider design options that eliminate or reduce the need for hardware. As an example, figure 4-2 shows several examples of molded-in alternatives to cable-guide hardware. Usually, the cost savings in hardware and assembly far exceed the added costs of mold modification and materials.

MECHANICAL FASTENERS

Mechanical fasteners — screws, bolts, rivets, and others — and their installation often represent a large portion of total assembly costs. They also add to the cost of dismantling products for repair or recycling. To reduce costs, consider replacing mechanical fasteners with snap-fit joints, molded-in hinges, latches, and other similar design features. Use interlocking and/or nesting features to reduce the number of screws needed.

When you must use fasteners, choose from the multitude of inexpensive, off-the-shelf varieties to lower costs. Additionally, many specialty fasteners for almost any type of application are available such as the spring-clip fasteners in figure 4-3. Avoid expensive, custom, or low-production fasteners, unless the performance advantage justifies the additional costs. Whenever possible, standardize fasteners to simplify inventory control and automation processes, as well as reduce unit cost.

Spring Clips **Figure 4-3**

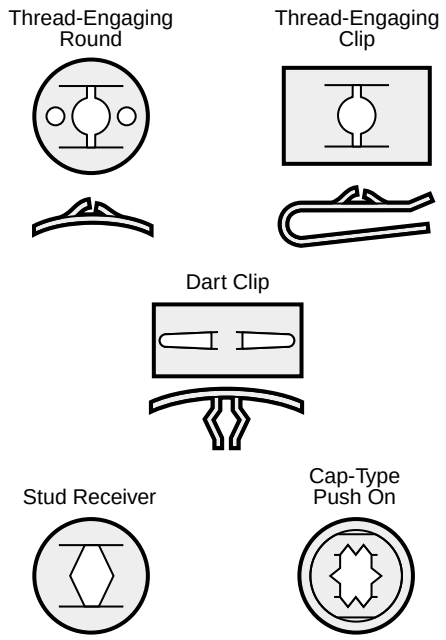

Inexpensive spring-clip fasteners are available for many applications.

Consider simplifying installation. For example, use hex holes to captivate nuts during assembly (see figure 4-4). Other ideas to consider include:

- Select good-quality screws with shaft-to-head-diameter ratios and head styles suited to automatic feed in assembly equipment;
- Avoid handling loose washers — use screws with washers affixed under the head;
- Use self-tapping screws to avoid a secondary tapping step;
- Use metal threaded inserts for screw connections subjected to frequent disassembly; and
- Consult Bayer's *Joining Techniques* for more information on mechanical fastening.

Hex Hole **Figure 4-4**

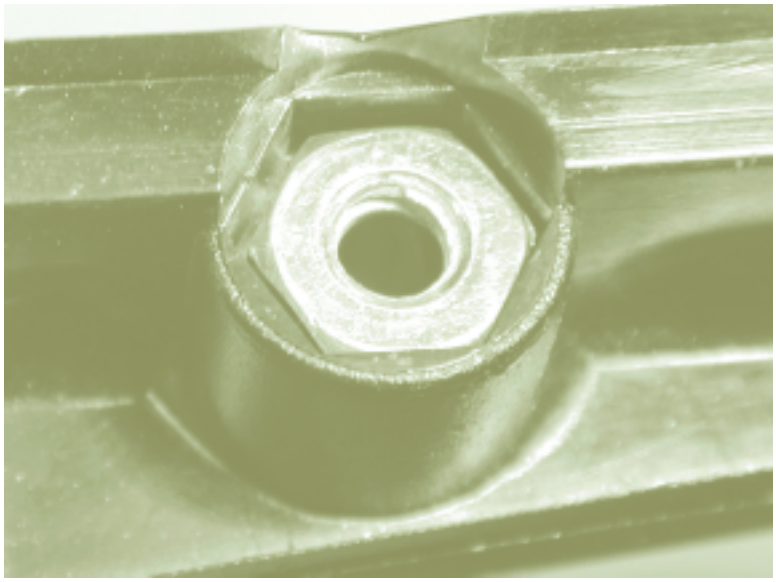

Hex holes captivate nuts during assembly.

SNAP-FIT JOINTS

Both economical and versatile, snap joints can eliminate fastening hardware, as well as reduce assembly and disassembly costs in a wide range of applications. Although they vary in appearance, all snap-fit joints rely upon the brief deflection of a flexible member to interlock a depression or undercut with a protrusion on a mating part. Varieties include cantilever snap-arms, and

torsional or annular snap-joint styles (see figure 4-5). The shape of the undercut determines if the joint can be separated later. Snap-fit designs with an angled undercut contact can be disassembled without first deflecting the snap feature to disengage the connection.

Snap-Fit Joints **Figure 4-5**

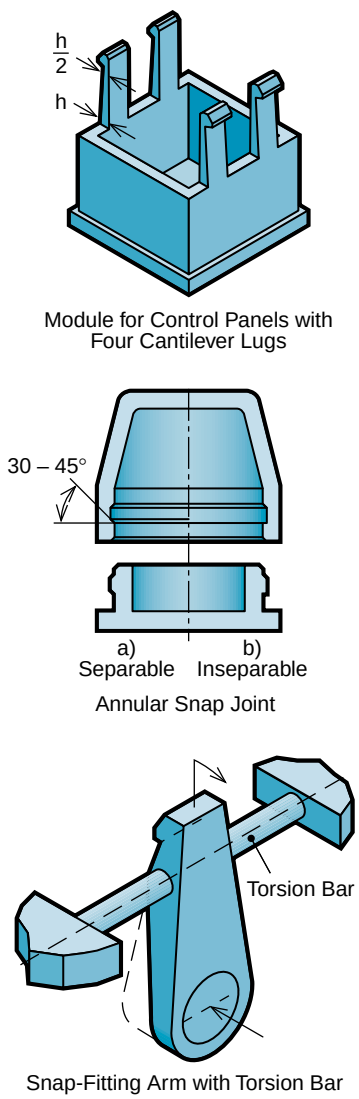

Varieties of snap-joint types.

If designed properly, snap-fit joints can secure parts of assemblies, such as solenoids and switches, replacing more-expensive screws (see figure 4-6). Special snap-joint designs can also act as latches for access doors and panels. Multiple snap arms or a combination of snap arms and rigid undercuts can often secure covers and panels (see figure 4-7). Rounded lids — such as on film canisters or food-storage containers — use annular snap-fit designs for continuous attachment and a good seal.

Snap-fit joints provide both secure attachment and easy disconnection of electrical connectors. They also facilitate quick and easy detachment of electrical components for repair and recycling. Some rules of thumb for designing snap-fit joints include:

- Design parts so that the flexure during snapping does not exceed the allowable strain limit of the material;
- Design parts so that the flexing member of the snap-fit joint returns to a relaxed, undeflected position after assembly;
- Avoid sharp corners in high-stress areas, such as at the base of a cantilever arm;

Table 4-1 **Permissible Short-Term Strain Limits at 23°C (73°F)**

Unreinforced

Apec	High Heat PC		4.0%
Bayblend	PC/ABS		2.5%
Centrex	ASA		1.9%
Durethan	PA	cond. dry	6.0% 4.0%
Lustran	ABS		1.8%
Makroblend	Polycarb. Blends		3.5%
Makrolon	PC		4.0%
Triax	PA/ABS		3.4%

Glass-Fiber-Reinforced (% Glass)

Makrolon (10%)	PC		2.2%
Triax (15%)	PA/ABS		2.2%
Makrolon (20%)	PC		2.0%
Durethan (30%)	PA	cond. dry	2.0% 1.5%

General guide data for the allowable short-term strain for snap joints (single joining operation); for frequent separation and rejoining, use about 60% of these values.

- Round corners to a minimum radius of 0.015 inch to reduce stress concentrations; and

- Avoid excessively large radii that could lead to sinks or voids.

Table 4-1 shows the permissible strain limits for various Bayer materials. The Bayer publication *Snap-Fit Joints for Plastics* explains how to calculate strain, permissible deflection, and assembly forces for various types of snap-fit joints. Consult this publication for additional information on snap-fit joint design.

In addition to meeting functional requirements, snap-fit joints must conform to standard, part-design guidelines, including:

- Avoid thin-wall sections that could lead to filling problems;

- As with ribs, make snap arms that project perpendicular to the part surface no more than 1/2 to 2/3 of the thickness of the part wall; and

- Draft snap-arms as you would ribs to ease release from the mold.

Snap Arms **Figure 4-6**

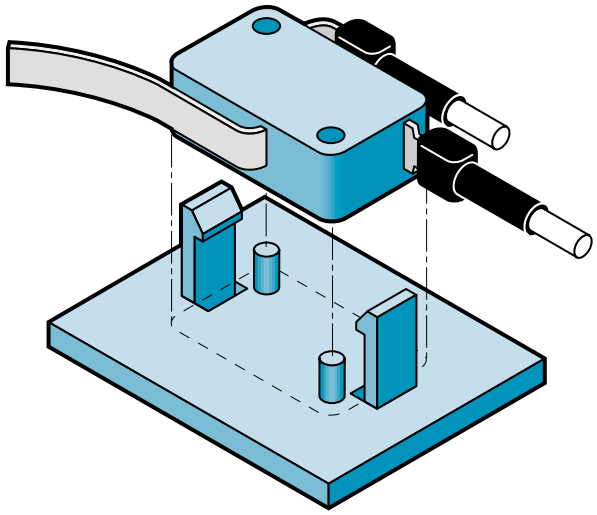

Positioning posts and snap arms eliminate screws and speed assembly.

Snap-Fit Assembly **Figure 4-7**

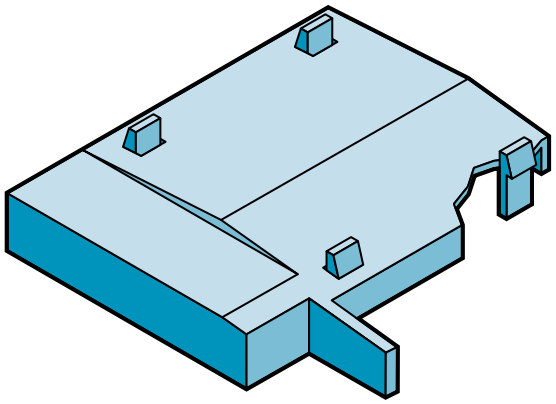

Multiple snap arms secure cover in this assembly.

Snap Arm **Figure 4-8**

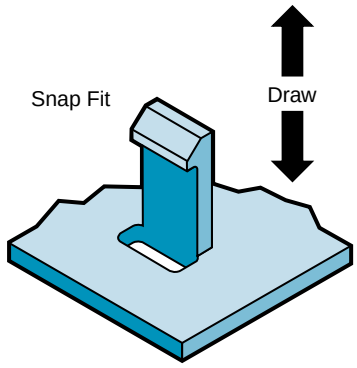

Snap-fit hook molded through hole to form undercut.

Thumb Tab **Figure 4-9**

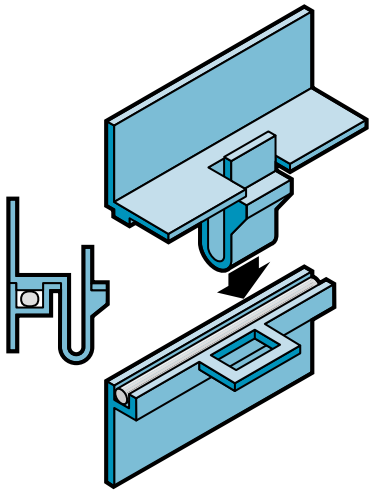

Special "U"-shaped snap latch with thumb tab.

Consider molding issues early in part design. To lower mold-construction and -maintenance costs, design simple, straight-draw, snap-fit joints (see figure 4-8), rather than ones that need slides in the mold. In some designs, the proximity of the snap-fit joint to other part or mold features does not leave enough room for a slide mechanism. Annular designs can be particularly difficult to mold. Some need collapsible cores or ejector sleeves, which can be problematic and difficult to maintain. Consult an experienced mold engineer before specifying any design that uses slides or other mechanisms to clear or eject undercuts.

The molding process offers the versatility to customize snap-fit designs for each application. For example, snap arms on frequently used doors or access panels could have finger tabs added for easier opening (see figure 4-9). Limited-access doors could have hidden snap-fit joints or require special tools. Some applications may require modifications in the snap arm to prevent excessive material strain during deflection. Consider lengthening the snap arm, reducing the undercut, or tapering the arm thickness in these situations (see figure 4-10).

Snap-fit features intended for automated assembly should join with a simple, one-direction motion, rather than a tilt-and-push or slide-and-push motion. The opposite may be true for hand-assembled components. Avoid designs that require more than two hands to engage or release a snap-fit joint.

WELDING AND BONDING

Welding and bonding techniques offer a wide variety of excellent joining and assembly options. In many applications, they provide the only viable methods of assembly. Both of these methods provide permanent bonds. Avoid welding and bonding when using materials that will have to be separated for recycling or repair, or when less-expensive joining methods suffice. When you must weld or bond, minimize the mix of techniques and equipment used.

This section deals with the broader aspects of welding and bonding and their effects on part and assembly design. For more specific information on welding and bonding, request a copy of *Joining Techniques* from your Bayer representative.

Common welding methods, including ultrasonic, vibration, hot plate, spin, and induction, each have specific advantages, as well as design and equipment requirements. These are discussed below.

Ultrasonic Welding

Ultrasonic welding, one of the most widely used joining techniques, is an excellent bonding method for thermoplastics. It makes permanent, aesthetically pleasing joints, at relatively high rates of speed. In this welding technique, an ultrasonic assembly unit generates mechanical vibratory energy at ultrasonic frequencies. The ultrasonic vibrational energy is transmitted through one of the mating parts to the joint area where frictional heating melts the plastic and forms the weld. When designing parts that will be ultrasonically welded, consider the following:

- For strong, consistent welds, ultrasonic joints need properly designed energy directors (see figure 4-11) or shear weld features;
- The equipment size and welding-horn design limitations determine the size and number of ultrasonic welds per operation;

Snap Arms **Figure 4-10**

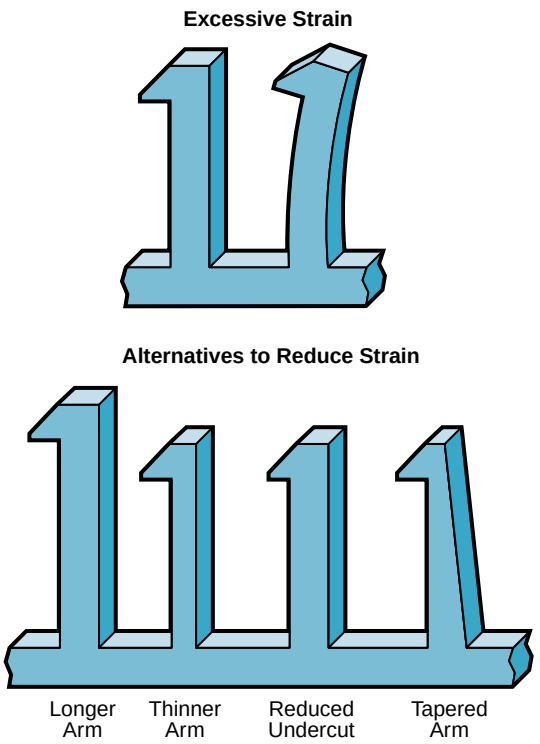

Short, thick snap arms with large undercuts can experience excessive strain during deflection. Consider lengthening or thinning the arm, reducing the undercut or tapering the arm to reduce strain.

Energy Director **Figure 4-11**

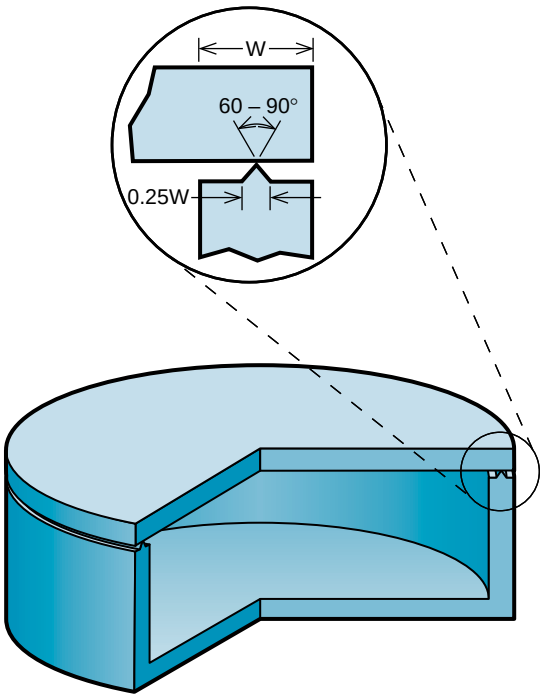

Typical energy-director design for Bayer thermoplastics.

- Mating materials must be compatible and rigid enough to transmit the ultrasonic energy to the joint area; and

- Stray welding energy can damage free-standing features and delicate components. Consult your welding experts for help in resolving this problem.

For more specific information on ultrasonic welding, request a copy of *Joining Techniques* from your Bayer representative.

Vibration and Hot-Plate Welding

To form continuous welds over large areas — particularly those too large for conventional ultrasonic welding — consider vibration or hot-plate welding. A friction-welding technique, vibration welding requires wide joint surfaces to accommodate the sliding vibration. To avoid dampening the vibration, part geometry must rigidly support the mating joint surfaces. In this process, one part remains stationary, while the second vibrates on the joint plane, generating heat. When the joint interface reaches a melted state, the parts are aligned and clamped until the bond has set.

For permanent, non-cosmetic welds along a single plane, hot-plate welding offers an economical joining method. In this joining method, a heated platen contacts two plastic parts until the joint area melts slightly. The platen retracts, and the parts are then pressed together until the bond sets.

Both techniques can produce flash or a bead along the joint when applied to simple butt-weld configurations (see figure 4-12). Consider joint designs with flash traps (see figure 4-13) for applications requiring flash-free joints.

Figure 4-12 **Welding Flash**

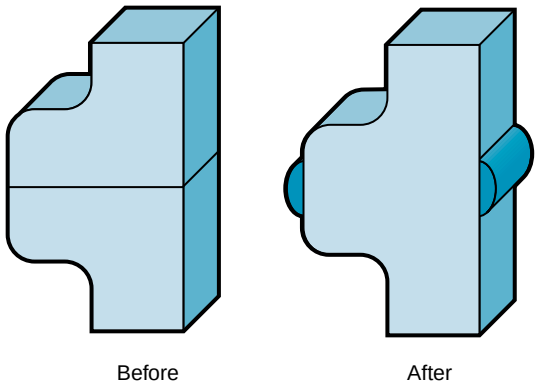

Butt-joint welds result in flash along the joint.

Figure 4-13 **Flash Traps**

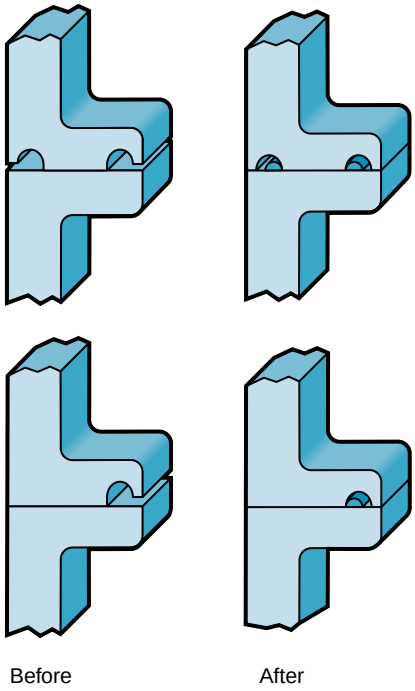

Variations with flash traps.

Spin Welding

Spin welding is used extensively to weld circular parts with continuous joints. Spin welding relies on frictional heat generated between mating parts, one spinning and one stationary, to melt plastic in a circular joint. After the friction melts a sufficient amount of plastic in the joint, the rotating stops and pressure increases to distribute melted material and complete the bonding process.

Parts designed for spin welding often have an alignment feature, such as a tongue and groove, to index the parts and make a uniform bearing surface. Joints for spin welding can also include flash traps to avoid visible welding flash.

Solvent and Adhesive Bonding

Probably the most versatile joining methods, solvent and adhesive bonding produce permanent bonds. These techniques place few restrictions on the part design. Solvent bonding joins one plastic to itself or another plastic by softening small areas on the joining surfaces with a volatile solvent. Adhesives are one-part or two-part “glues” that adhere to mating surfaces and cure to form the bond.

Solvent bonding limits your choice of materials to plastics for which there is a suitable solvent. When bonding dissimilar materials, the same solvent must work on both materials. If your part will be made of polycarbonate resin, allow for vapor dispersion after bonding. Trapped solvent vapors can attack and damage polycarbonate resins.

Adhesive bonding offers more versatility for bonding different types of plastics together and also dissimilar materials, such as plastics to metal, plastics to glass, fabric to plastic, etc. The Bayer brochure *Joining Techniques* lists various adhesives and their suitability for use with different Bayer resin families.

When selecting an adhesive, consider curing time and cost as well as special adhesive system requirements. UV-cured adhesives, for instance, work best with transparent plastic parts. The part design must accommodate direct-line-of-sight access from the UV source to the bond area or the bond edge.

Retention Features **Figure 4-14**

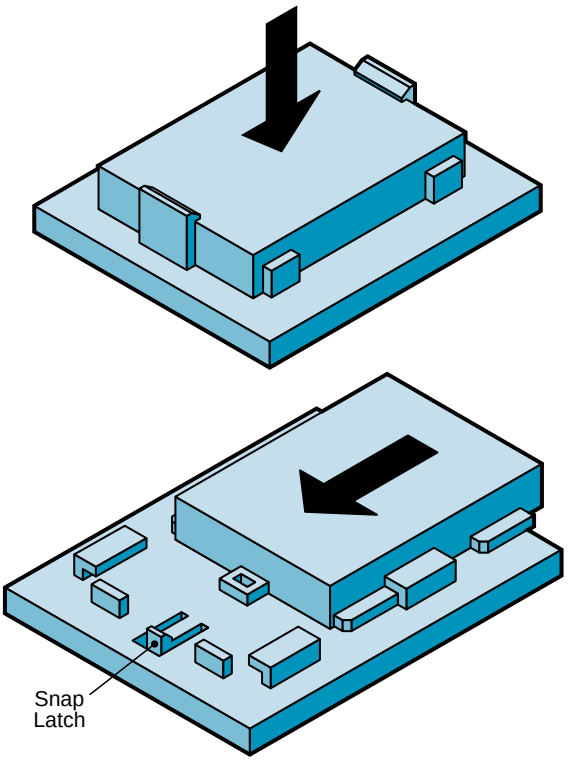

Molded-in assembly features can captivate and retain components without hardware.

Assembly Features **Figure 4-15**

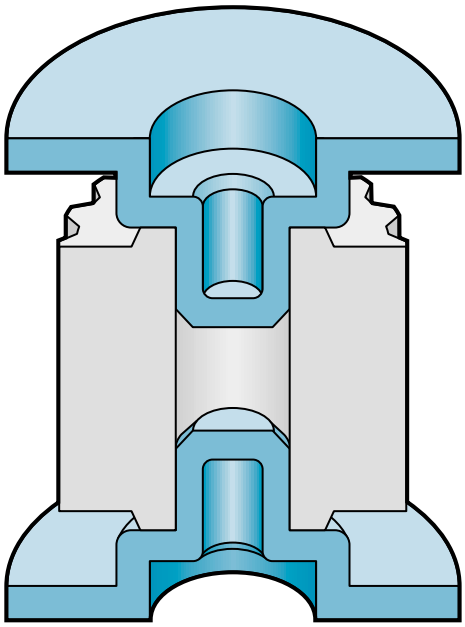

Parts can be captivated between halves of an assembly as in this illustration of a gear held in place between axle posts.

RETENTION FEATURES

The molding process offers the freedom to custom-design features to locate and retain components during assembly. Components can nest between ribs or slide into molded-in retainers for assembly without hardware (see figure 4-14). In some products, halves of the assembly can captivate components without additional attachment (see figure 4-15). This joining method permits efficient assembly and simplifies dismantling for repairs or recycling.

ALIGNMENT FEATURES

To help in assembly, consider designing your part with alignment features. Parts must assemble easily and efficiently, despite minor misalignments. Parts with sharp leading edges can snag or catch during assembly, requiring more time and effort. Chamfers added to either or both leading edges quickly align mating features, reducing the positioning accuracy needed for assembly (see figure 4-16).

Lead-In Angles **Figure 4-16**

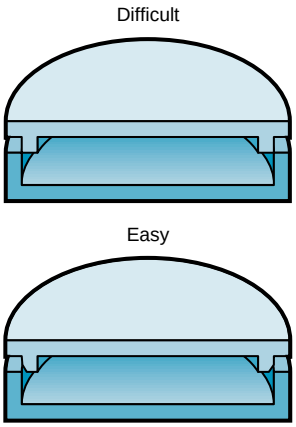

Lead-in angles on the lid in the lower assembly help to align the lid with the base and ease assembly.

Edge Alignment **Figure 4-17**

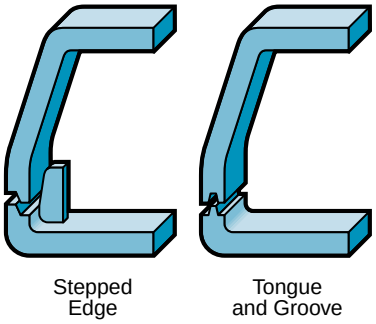

Tongue-and-groove or stepped features ensure proper edge alignment.

Alignment Fingers **Figure 4-18**

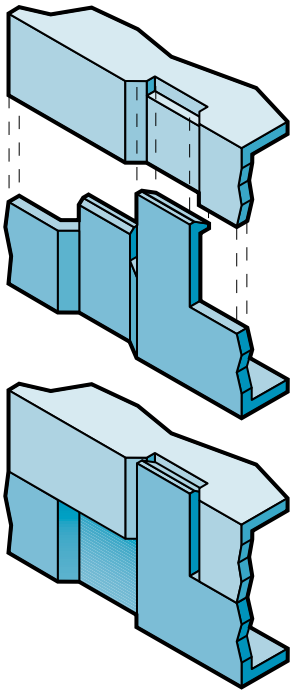

Bypass fingers ensure proper alignment of sidewalls while maintaining uniform wall thickness.

Boss Alignment **Figure 4-19**

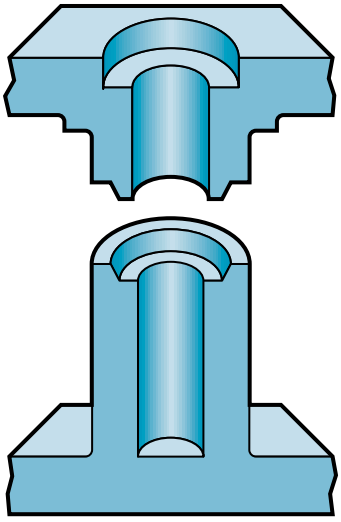

Existing design elements can often be modified to provide positive part alignment as in the angled lead-ins added to these mating screw bosses.

Housing or enclosure sidewalls can bow during molding or deflect under loading, resulting in poor alignment along mating edges. When appearance is important, consider designing an interlocking edge to correct for this bowing (see figure 4-17). On thin sidewalls, full tongue-and-groove designs split the sidewall thickness into two thin sections. This design may lead to molding problems and lack the required strength. A somewhat better design, the stepped edge, can have high molding stresses and a gloss difference at the thickness transition. Rounding or chamfering the transition corner often improves this condition. The stepped-edge design supports the wall in just one direction. Adding a protruding rib to support the inside surface locks the walls in two directions and provides better alignment.

When aesthetics are less important, choose a more-robust, interlocking design for aligning sidewalls. A variety of easily molded design options using interlocking alignment fingers can align and secure the sidewalls while maintaining uniform wall thickness (see figure 4-18). Other simple options for aligning mating parts include post-in-hole and boss-alignment features (see figure 4-19). The astute designer often can modify existing part-design features for positioning and alignment with little added part or mold cost.

ORIENTATION

Adding orienting features to molded parts can simplify assembly, reduce costs, and prevent assembly errors. When possible, incorporate features that prevent assembly unless components are oriented correctly. Otherwise, clearly indicate correct orientation on the mating parts (see figure 4-20). Symmetry simplifies assembly. Often parts need only minor modifications to increase symmetry and allow orientation in more than one direction (see figure 4-21).

EXPANSION DIFFERENCES

Plastic parts are often attached to components made of materials with much different coefficients of linear thermal expansion (CLTE). If your part will contain different materials, design for CLTE differences. For instance, a plastic part tightly attached to a metal component can bow between attachment points when exposed to elevated temperatures (see figure 4-22). Designing the plastic section with slotted holes provides a sliding fit to accommodate dissimilar levels of expansion. You may need to make similar design adjustments when joining plastic parts to parts made of certain polyamides and other plastics that swell significantly as they absorb moisture.

TOLERANCES

If all components of an assembly could be produced and joined with perfect repeatability and accuracy, the task of assigning tolerances would be simple. However, each manufacturing step introduces its own variability and with it, potential tolerance problems. For instance, molded-plastic part dimensions vary with processing fluctuations. Stamping and machining create part-to-part differences in metal components. Assembly steps such as positioning, guiding, indexing, fixturing, and welding present additional sources of variability. When developing part tolerances, consider the following:

Figure 4-20 **Orientation Features**

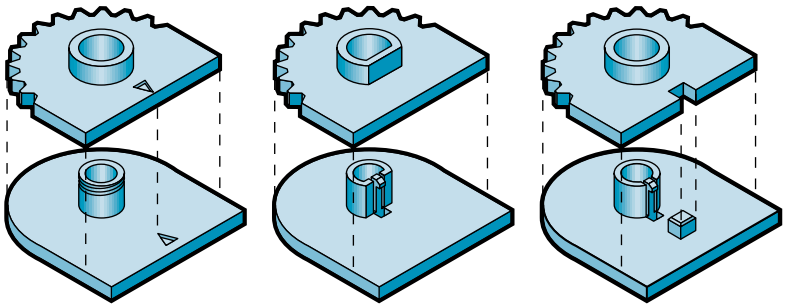

To ensure proper orientation during assembly, add features that either mark the correct position or prevent assembly of misaligned components.

Orientation Symmetry **Figure 4-21**

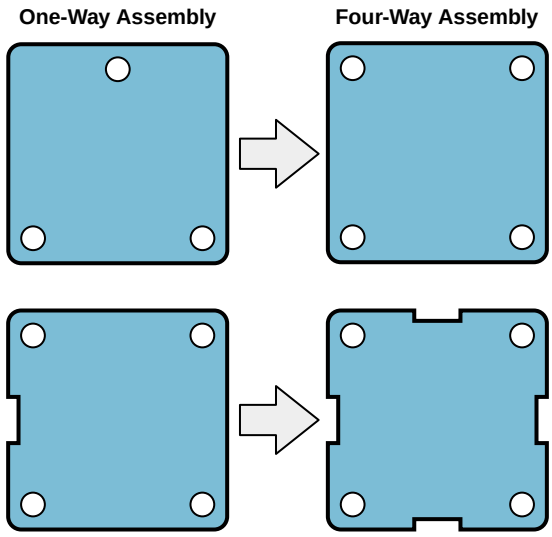

Simple modifications can often increase symmetry and simplify assembly.

Thermal Expansion **Figure 4-22**

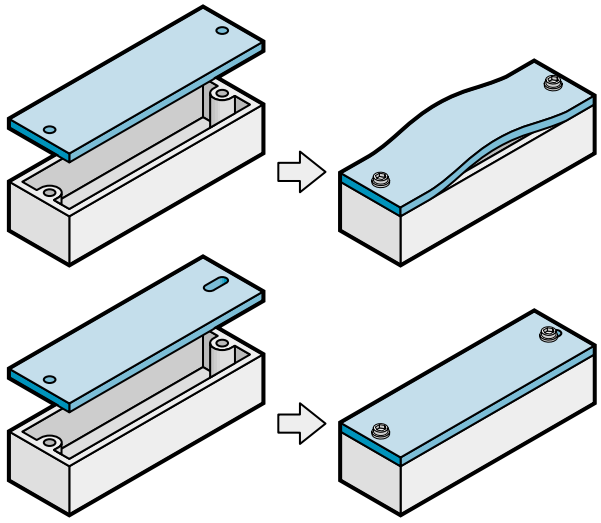

The slotted hole and sliding attachment at one end of the plastic cover in the lower assembly enable it to accommodate the thermal expansion difference with the metal base.

- Avoid specifying arbitrarily tight tolerances to components and the assembly process, as it can add needlessly to costs;
- Accommodate part and process variability in your design;
- Include design features such as slotted holes, alignment features, and angled lead-ins to lessen the need for tight tolerances;
- Take advantage of the ability of the injection-molding process to mold small features with excellent repeatability; and
- Avoid tight tolerances on long dimensions and on features prone to warpage or distortion.

Exercise discretion when assigning available tolerances between the components and assembly processes. Give the tightest tolerances to the part, feature, or process that adds the least cost to the entire process. It may be more economical to loosen the tolerance on the plastic component and tighten the tolerance on the assembly procedure or mating components. Consider all the sources of variability and optimize tolerances for the lowest overall cost. See the mold design chapter for more information on tolerances.

Chapter 5

MACHINING AND FINISHING

Injection-molded parts seldom need to be machined or finished. The machining operations described in this section — drilling, reaming, sawing, punching, die cutting, and others — are used more commonly for fabricating prototypes and for trimming or modifying parts produced by other processes such as thermoforming or extrusion.

DRILLING AND REAMING

While most frequently used to form holes in thermoformed or prototype parts, drilling and reaming can also make holes in injection-molded parts when forming the hole would require complicated side actions or inserts.

Although standard drills and bits work with Bayer thermoplastics, specially designed drills and bits perform much better. Overheating, gumming, and induced machining stresses pose the greatest difficulties, particularly when drilling parts made of polycarbonate. Sharp drills and bits designed for plastics and proper drilling speeds alleviate most difficulties. Table 5-1 lists common problems and remedies.

Drills for plastics generally have wide, polished flutes to reduce friction, as well as spiral or helix designs to remove chips quickly. Drill-point angles for plastics typically range between 60 and 90 degrees, with smaller angles for smaller holes and larger angles for larger holes. The suggested drilling speeds for most Bayer plastics are between 100 and 200 feet per minute. Table 5-2 lists common feed rates in inches per revolution for a range of hole sizes. Under ideal conditions — good cooling, sharp drills, and efficient chip removal — considerably faster feed rates are usually possible.

Table 5-1 **Common Drilling Troubles and Remedies**

Fault	Probable Cause	Remedy
Hole Too Large	1. Unequal Angle on Length of Cutting Edge	1. Properly Regrind Drill
	2. Burr on Drill	2. Properly Regrind Drill
Rough or Burred Hole	1. Dull Drill	1. Regrind Properly
	2. Improperly Ground Drill	2. Regrind Properly
	3. Too Coarse Feed	3. Reduce Feed
	4. Inadequate Lubrication	4. Correct to Remove Heat
Breaking of Drill	1. Feed Too Heavy in Relation to Spindle Speed	1. Reduce Feed or Increase Speed
	2. Dull Drill-Grabs in Work	2. Regrind Drill
	3. Inadequate Chip Clearing	3. Check Application Setup
Chipping of High-Speed Drill	1. Improper Heat Treatment After Regrinding	1. Follow Manufacturers Recommendations
	2. Too Coarse Feed	2. Reduce Feed

Table 5-2 **Feed Rate**

Drilling Conditions	
Drill (in)	**Feed (in/rev)**
Up to 1/8	0.001 – 0.002
1/8 to 1/4	0.002 – 0.004
1/4 to 1/2	0.004 – 0.006
1/2 to 1	0.006 – 0.008

For smoothly drilled holes, remove most of the plastic with a roughing drill. Then finish and size the hole with a second drill. Or, as an alternative method, use a two-step drill as illustrated in figure 5-1. For accurate work and to minimize drill breakage, consider using jigs with guide bushings (see figure 5-2).

Some rules of thumb for drilling thermoplastics include:

- Use carbide-tipped drills, because they resist gumming and maintain edge sharpness longer than standard drills;
- Avoid cutting oils and cooling liquids, because they may create chemical-compatibility problems and will have to be removed after drilling; and
- Use a forced-air stream for cooling.

Consider a water spray mist or water-soluble coolant when a forced-air stream cannot provide sufficient cooling.

Reaming creates smooth finishes and precise hole dimensions, making it ideal for determining final tolerances in prototype parts. Additionally, reaming removes gate vestige or flash from

Two-Step Drill **Figure 5-1**

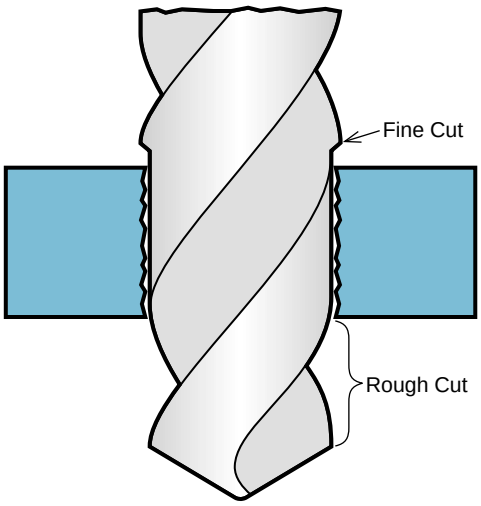

The first step removes most of the material. The second step makes a fine cut to size.

Drilling Jig **Figure 5-2**

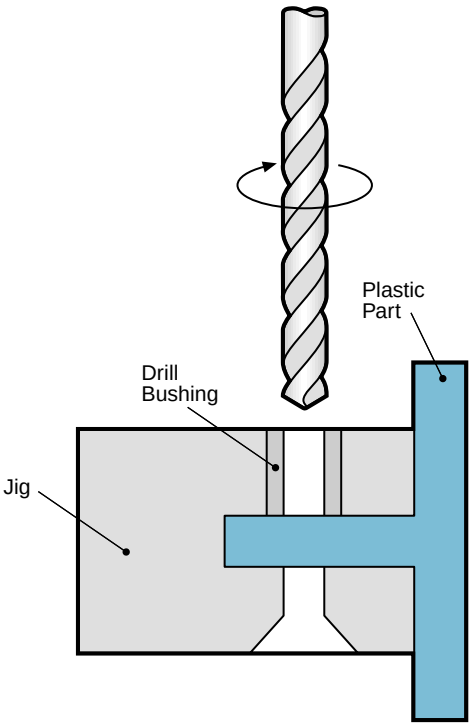

For accurate work, use a drilling jig with a hardened drill bushing.

holes, as well as enlarges drilled or thermoformed holes. As in drilling, reaming requires sharp cutting edges and relatively slow cutting speeds to prevent heat buildup and gumming.

TAPPING

Tapping adds screw threads to drilled or molded holes in plastic parts. Coarse threads, such as National Coarse (NC), tend to work better in plastics because they provide greater thread depth relative to the overall diameter. This improves the thread strength. Coarse threads also make chip removal easier because there are fewer threads per inch.

The tap flutes should be finish ground and highly polished to reduce friction and heat. The cutting flutes might need to be somewhat oversize to compensate for plastic recovery and subsequent reduction in the diameter of the tapped hole. The amount of recovery will depend on the size of the tap and the properties of the material.

For a given tap size, the hole size needs to be slightly larger for plastics than for metals. The hole size for tapped plastic threads should yield about 75% of the full thread. This helps to prevent breakage and peeling of the threads. For blind holes, use a tapered tap before a bottom tap or employ the three-tap system as used with metals. Low spindle speeds, about 50 feet per minute, and use of a coolant will minimize frictional heating and thread distortion. All rigid Bayer plastics can be tapped, but because of its brittle nature, tapping is not recommended for Lustran SAN.

SAWING

While molded parts seldom require sawing, thermoformed plastic parts are sawed regularly to trim edges and form openings. Some fabricated prototype parts or molded designs using extruded-sheet components may also need to be sawed. Bayer plastics are best cut on band saws or circular saws. The reciprocating action of a jigsaw makes it difficult to control cooling, feeding, and pressure. If you must use a jig saw, keep the feed rate slow and the pressure light with the part held firmly. Choose blades with generous set to minimize friction. Most Bayer plastics have been successfully cut with standard jig saw blades operating at 875 cycles per minute.

Band sawing, the preferred method for plastics, can cut contoured or irregular shapes in addition to straight lines. As rules of thumb:

- Use precision or standard blades for thin parts;
- Use buttress or skip-tooth blades for wall sections greater than 1/8 inch;
- Choose band-saw blades with a generous set to reduce friction and heat buildup;
- Cool the cut junction area with air or a water mist;
- Control the feed speed carefully to prevent binding or gumming; and
- Use saw guides whenever possible.

Table 5-3 lists suggested band saw speeds and configurations for most Bayer plastics including Lustran ABS, Bayblend PC/ABS, Cadon SMA, Centrex ASA, and Triax PA/ABS. Fine cuts in Makrolon PC generally require about 50% more teeth per inch than listed in the table and about 2/3 of the listed cutting speed. Durethan PA6 resins cut well with 25% more teeth per inch and cutting speeds about 50% faster than listed.

Table 5-3 **Band Saw Conditions**

Part Thickness (in)	Tooth Type	Pitch (teeth/in)	Band Speed (ft/min)
< 1/8	Precision or Standard	8 – 12	2,000
1/8 - 1/4	Buttress or Skip Tooth	5 – 6	1,500
> 1/4	Buttress or Skip Tooth	3 – 4	1,000

Circular sawing is usually used only for straight cuts. Circular saw blades for plastics should be hollow ground with slots provided for blade expansion and cooling. The required blade pitch depends on the diameter of the blade. Larger blade size and greater plastic thickness reduce the optimum pitch value. A four-inch blade for thin sheet should have eight to ten teeth per inch for most plastics. The pitch can increase to about six to eight teeth per inch for eight to ten inch blades used on sheet thicker than 1/4 inch. As a general rule, use the highest pitch value that gives the desired results. Cutting speeds can vary from about 5,000 peripheral feet per minute for polycarbonate to about double that rate for most other Bayer thermoplastics.

PUNCHING, BLANKING, AND DIE CUTTING

Although common in thermoforming for edge trimming and hole forming, punching and die cutting are used rarely on finished molded parts. Possible applications for molded parts include removing ring or diaphragm gates, and trimming lengths to custom sizes. Additionally, if your part has varying hole positions that require many different mold configurations, punching may be an economical alternative. Blanking dies are used on occasion to trim parting lines and remove flash from parts.

The types of dies used with plastics include punch, steel-rule, and clicker. Steel-rule dies trim lighter-gauge parts. Clicker dies perform heavier-gauge cuts and continuous cuts in sheet. For a clean cut, maintain a clearance between the punch and die of about 0.005 inch for most applications. Dies usually have a backup surface made of end-grain wood or hard rubber. The dies are mounted on either a kick press, "clicker" or dinking machine, or a punch press. System selection will depend on the thickness and quality of the cut desired and on the type of process: continuous or intermittent.

When planning to punch, die cut, or blank thermoplastics, consider the following:

- For best results, consider warming the plastic part to soften it when using any of these techniques;
- Maintain sharp cutting edges for clean cut and to avoid notches and scratches that could act as stress concentrators;
- Avoid sharp radii in the corners of non-circular cut-outs; and
- Avoid punching, die cutting, or blanking parts made of filled materials.

Punching, blanking, and die cutting work best on ductile materials with limited toughness. Because of its lack of ductility, these techniques should not be used with Lustran SAN. Makrolon PC and Bayblend PC/ABS resins exhibit high levels of toughness and should only be considered for these processes in thin sections such as gates, films, or thin sheet.

MILLING

Used to remove large volumes of plastic with relatively high accuracy and precision, milling finds applications in prototype fabrication or as a secondary operation for trimming parting lines, glue joints, or gate excess. Additionally, molders often use end mills to trim sprue gates.

Mounted in a drill press, an end mill can plunge repeatedly to a preset depth to produce flush, smooth final trims of fixtured parts. High-speed end mills with four cutting flutes and a 15-degree rake angle give good results for most plastics. Additionally, parts can follow guides to side mills or reamers for accurate trimming of thick edge gates or tab gates. Always keep mills extremely sharp and well polished to reduce friction. Milling in Makrolon PC typically works best at feed speeds of 5 – 10 inches/min and cutting speeds of between 100 and 200 sfm. Table 5-4 lists a generic range of conditions when using a steel tool to mill most other types of Bayer plastics.

Carbide cutters generally provide smoother finishes and higher feed rates for all types of rigid plastics, especially glass-filled materials. Special cutters designed specifically for plastics produce the smoothest finishes at the fastest feed rates. Check with your cutter supplier for the latest designs for plastics. Consider the following when milling plastics:

- Excessive feed rates can cause rough surfaces;
- Insufficient feed rates can generate too much heat and cause part melting, distortion, or poor surface quality;
- Water mists help to remove heat and prevent buildup. Use them on all but the very shortest of milling operations; and
- Improper milling can induce high stress levels, causing later problems.

Proper milling techniques are particularly important for parts made of polycarbonate, which can stress crack and craze long after milling. Consider annealing milled polycarbonate parts to relieve the machining stresses. Do this by heating the supported work to 260 – 270°F for 1/2 hour for each 0.2 inch of part thickness.

TURNING AND BORING

Turning is often used to manufacture round shapes from bar stock. Exercise care when turning thermoplastics to prevent vibration or chatter. When turning plastics, consider the following:

- Support the material rigidly either by chucking closely on short parts or by using supporting tools for longer parts;
- Use air, water mist, or water-soluble coolants to remove heat and prevent vibration and crazing; and
- Keep the cutting edge sharp to prevent friction and overheating.

Table 5-4 **Milling Conditions**

	Depth of Cut (in)	Feed (in/tooth)	Speed (ft/min)
Face Milling	1/8	0.015	600 – 800
	1/16	0.005	800 – 1,000
End Milling	1/4	0.003	250 – 500
	1/16	0.002	300 – 600

Proper, low-stress turning removes material in a continuous ribbon. To achieve this the cutting tool should have the following:

- 0 to 5 degree positive rake angle for most Bayer plastics to reduce friction;
- 5 to 25 degree rake angle for Makrolon PC (see figure 5-3);
- Front clearance angle of 10 to 15 degrees to prevent contact of the part and tool heel;
- Side clearance angle of 10 to 15 degrees to reduce friction; and
- Nose radius of 1/16 – 3/16 inch.

To minimize the tendency of the work to climb, set the cutting edge 1 to 2 degrees above the center of the work rather than in the direct center. When turning Makrolon PC, stress-relieve the part prior to use. Do this by heating the supported work to 260 – 270°F for 1/2 hour for each 0.2 inch of part thickness. Table 5-5 shows the standard turning conditions for a variety of Bayer materials.

LASER MACHINING

The laser machining process provides a non-contact method for drilling, cutting, or sealing most thermoplastics. In this process, a laser — usually a carbon-dioxide type operating in the infrared region — directs a finely focused, high-energy beam at the plastic surface. The high intensity beam, either pulsed or continuous, quickly vaporizes the plastic leaving a smooth cut with little heat buildup in the adjacent surfaces.

Pulsed beams can quickly bore holes from 0.002-inch to 0.050-inch diameter. Dwell time and beam intensity determine the depth of penetration into the hole. Because the focused laser beam is slightly cone-shaped, lasers tend to produce cone-shaped holes unless corrective lenses are used. Larger holes are “cut” by moving the part in a circular pattern through a continuous beam. The cutting rate depends on the thickness and type of material. Holes formed this way are clean but with a slight taper along the edge, typically about 3 degrees. Cut features can also have a slight bead along the edge.

Laser machining can cut or drill areas that are inaccessible by traditional methods. In addition, the process produces holes and cuts that are essentially free of the notches and residual stresses associated with most machining methods.

PC Cutting Tool **Figure 5-3**

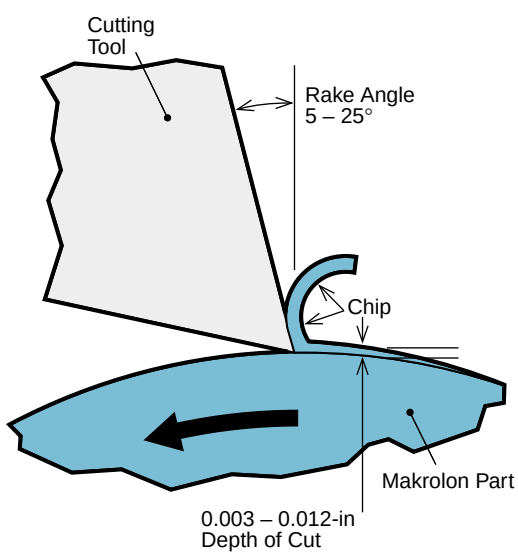

Cutting tools for Makrolon PC usually have a 5 – 25° rake angle.

Table 5-5 **Turning Conditions**

Material	Depth of Cut (in)	Feed (in/rev)	Speed (ft/min)
Lustran SAN	1/8	0.005	75 – 100
	1/16	0.003	100 – 150
	1/32	0.001	150 – 200
Lustran ABS **Cadon** **Triax** **Centrex**	1/8	0.015	200 – 250
	1/16	0.010	250 – 300
	1/32	0.005	300 – 350
Apec **Makrolon** **Bayblend** **Durethan**	1/8	0.012	300 – 350
	1/16	0.006	350 – 400
	1/32	0.003	400 – 500

FILING

A relatively quick and controllable method for removing significant amounts of unwanted plastic, filing is used frequently to smooth edges on thermoformed parts, trim gate excess, and remove flash. If your part design calls for filing, address the following:

- Use files with relatively coarse teeth and a suitable rake for efficient chip removal on parts made of ABS and other medium-hard plastics;
- Use single-hatched files that resist clogging under high pressure for parts made of polycarbonate; and
- Do not file parts made of unfilled nylon and/or elastomeric TPU.

SANDING

Use a conventional belt or disc sander to remove gate excess, flash, mold marks, and imperfections in most parts made of rigid plastics. To inspect internal features and assemblies, you can sand parts for cross-sectional views, although sanding will destroy the part or assembly.

Frictional heating, the primary source of difficulties when sanding thermoplastics, can melt plastic surfaces and clog sanding media. Heat dissipates slowly in most plastics, so dry sanding must usually be done at slow speeds with coarse-grit paper. Dry sanding produces quick results and rough finishes, and requires provisions for dust collection and/or removal.

In wet sanding, a liquid — usually water — alleviates frictional heat and removes sanding debris, reducing the chance of gumming. When wet sanding, you can use a wider range of grit sizes, from coarse to very fine, depending upon the requirements. Although wet sanding can produce very smooth surfaces, plastic parts will generally need an additional buffing step to achieve a glossy finish.

POLISHING AND BUFFING

Use polishing and buffing to create uniform high-gloss or satin finishes, as well as to remove surface imperfections, sanding marks, scratches, and gate marks. Buffing can involve different types of finishing operations including:

- Satin Finishing — for a satin or brushed finish;
- Cut-Down Buffing — for a smooth finish;
- Cut-and-Color Buffing — for a lustrous finish;
- Final Color Buffing — for a high gloss, mirror-like finish.

Satin finishing, or ashing, removes major irregularities on the surface and leaves a satin finish. Cut-down buffing, with a cotton or muslin wheel and buffing compound, brings the luster to an intermediate, smooth finish ready for final color buffing. Cut-and-color buffing produces a high-gloss finish in most Bayer materials.

Wheels for cut-and-color buffing often consist of unbleached cotton discs laid alternately with two layers of 5-inch discs and two layers of 12-inch discs. Final wheels have two layers of 12-inch and four layers of 5-inch unbleached cotton discs laid alternately. The buffing wheels mount to conventional buffing equipment and spin at 1,500 to 3,000 rpm.

Buffing to a high gloss requires a sequence of steps that may vary from material to material. For ABS, the process usually starts with unbleached cotton buffing discs for cleaning and preparation. A cutting or polishing step, followed by a wiping or coloring step, increases gloss. After buffing with an appropriate polishing compound — such as rouge or greasy tripoli — the part receives a final polishing on a clean finishing wheel made of a soft material, such as muslin, flannel, or felt. Light application pressure and cooling liquids help prevent heat buildup and resulting surface damage.

TRIMMING, FINISHING, AND FLASH REMOVAL

In addition to the machining and finishing methods discussed earlier in this chapter, molders have a wide variety of hand- and pneumatically operated nippers, cutters, and scrapers, as well as some remelting and honing techniques to remove gate excess and flash. These techniques and equipment are discussed in this section.

For aesthetic reasons, gate marks and flash on some parts must be totally removed. Two common techniques to remove these blemishes are hot-air remelting and vapor honing. The hot-air method uses a heat stream from a hot-air gun to remelt and smooth the area. Vapor honing uses a chemical vapor to dissolve the surface, resulting in a similar effect.

Because both of these processes add to your overall costs, try to position gates so they are not visible in the final assembly or choose a less-noticeable gate, such as a valve gate. Do not rely on unrealistically small gates to hide or lessen the appearance of the gate mark. Part geometry, molding resin, and processing requirements dictate appropriate gate size. Please refer to the mold design chapter in this manual for information on gate size and placement.

Most of the machining and finishing methods described in this chapter are used to remove flash from molded plastic parts. Another more common method, scraping or trimming uses specially designed, knife-edged scrapers that remove flash as a continuous filament without digging into the part. A variety of scraper shapes and sizes are available commercially.

Another method, tumbling, removes flash by tumbling parts together in a special rotating drum with a mild abrasive media such as crushed cocoa bean shells. Commonly used to remove flash from rigid thermosets, tumbling usually does not work well with Bayer thermoplastic materials. Tumbling in these materials tends to bend or flatten flash rather than remove it by breaking or abrasion.

In one new and novel approach, parts placed in a specially designed chamber are exposed to a flash detonation that instantaneously melts flash, without damaging the part. While expensive, if your part has difficult-to-remove flash, this method may prove economical.

Always compare the cost of reworking the mold to the cost of secondary flash-removal operations. Many times, repairing the mold could result in long-term cost savings.

Chapter 6

PAINTING, PLATING, AND DECORATING

While some plastic parts require painting, plating, and/or decorating for aesthetic or functional concerns, most do not for two reasons: first, the injection-molding process accommodates a diversity of high-quality surface finishes and textures; second, thermoplastic resins can be produced in a rainbow of colors. Some specific instances where painting or plating may be needed include: protecting final assemblies from harsh chemicals or UV degradation, shielding electronic devices from EMI radiation, or adding graphics or labeling in contrasting colors. Painting, plating, and decorating, as well as their design considerations, are discussed in this chapter.

PAINTING

The most common reason for painting or coating thermoplastic parts is to enhance aesthetics and provide uniform color and texture to assemblies made of different materials or by different processes. Paints and coatings can hide some molding defects, such as gate blush or foam swirl. They also offer colors or surface effects that resins cannot, such as certain metallic or stippled effects. In addition, some paints perform a function, such as electrically conductive paints for EMI/RFI shielding.

Paints and coatings can also protect the plastic substrate from chemicals, abrasion, or environmental attack. For instance, paint prevents many colored plastics from fading and becoming brittle when exposed to the elements and/or UV radiation from sunlight or artificial lighting. Coatings can also prevent attack from cleaning solvents, lubricants, and other substances encountered in-use or during manufacture. Commercial scratch-resistant coatings commonly provide abrasion resistance for lenses made of Makrolon polycarbonate. Contact your Bayer sales representative for the latest information on scratch coatings and treatments for Bayer thermoplastic resins.

Types of Paints

Paints are generally made up of four components: a polymeric resin or resin components that form the coating; pigments or dyes for color; a solvent or carrier for thinning, delivery, and uniform coverage; and additives to enhance or modify application, adhesion, and appearance. A variety of paints have been developed based on different chemistries and polymer types.

The common types of paints used on plastics include polyurethane, acrylic, alkyd, epoxy, and vinyl.

- **Polyurethane paints** provide a flexible, durable finish, cure without heat, and are compatible with most plastics, including many chemically sensitive, amorphous plastics, such as polycarbonate and polycarbonate blends.

- **Epoxies** typically produce hard, tough, glossy finishes.

- **Vinyls** tend to produce soft, rubbery finishes.

- **Acrylic paints** give brittle, scratch-resistant finishes that resist most common oils.

Several factors determine the type of paint systems you choose, including the specific plastic substrate, the type of finish required, available painting facilities, and local regulatory restrictions. To some degree, the paint system should chemically react with the plastic surface for good adhesion, but it should not damage the plastic substrate.

Paint systems also differ in the types of solvent system used. Solvent systems generally fall into two types: organic-solvent systems or water-based systems.

Organic solvents penetrate the plastic substrate to form strong chemical bonds for superior adhesion. Excessively aggressive solvents may damage the substrate. For example, many solvent systems severely damage parts made of polycarbonate resins. Damage and chemical attack tend to be worse in areas of high molding or assembly stresses. Always test your solvent system on an actual, finished part to determine its suitability.

Water-based systems are generally less aggressive to plastic parts but tend to form slightly weaker bonds. An increasingly important advantage, water-based systems avoid most of the environmental, health, and safety issues associated with organic-solvent systems.

Paint Curing

There are a variety of methods to cure paints:

- **Air-curing paints** solidify as the solvent evaporates, leaving the resin to polymerize on the part surface.

- **Heat-curing systems** bake parts for rapid and complete curing. The curing temperature for these paints may limit your choice of plastics on which these paints can be used. Parts must withstand the required curing temperature. Polycarbonate parts can usually withstand paint bake temperatures of about 120°C (250°F).

- **Two-component paint systems** use a chemical reaction to drive the curing process. These systems generally give off very few volatiles, but have a short pot life after mixing: often only minutes.

- **Other paints** rely upon exposure to oxygen or UV radiation to completely cure.

Paint-Selection Considerations

Semicrystalline plastics, such as nylons, tend to be chemically resistant to most solvent systems and often require special pretreatments or primers. Acetal, polypropylene, and polyethylene, which have waxy surfaces, are chemically resistant to most solvent systems as well. **Amorphous plastics**, such as polycarbonate or ABS, because they are less chemically resistant, achieve good adhesion with many more paint systems.

Look for a system that is not too chemically aggressive: especially for polycarbonate and polycarbonate blends. To achieve the optimum match of substrate and paint system, consult both your resin and paint suppliers before making your final selection. The cost of the paint is usually insignificant compared to the labor and overhead costs, and the cost of complying with environmental protection regulations. Be sure to consider the cost of the entire process when making your selection.

Government regulatory agencies, especially OSHA and EPA, limit the emission of volatile organic compounds (VOCs) into the air. Many organic-solvent-based paint systems and application systems cannot meet current emission limits without elaborate and expensive environmental-protection equipment. Generally, waterborne coatings and high-solid polyurethane systems comply with most government regulations. Check the current and near-future regulations in your area, because these regulations vary.

Spray Painting

Spraying, the most common painting method for plastics, can be conventional, airless, or in some instances, electrostatic. Robotics can automate the spraying process and improve painting consistency.

- In **conventional spray painting**, compressed air atomizes and delivers tiny droplets of paint onto the part surface.
- In **airless systems**, paint is forced through a spray nozzle at high velocity.
- In **electrostatic systems**, opposite electrical charges applied to the paint and part attract paint droplets to the part surface. Electrostatic systems improve coverage and reduce overspray (see figure 6-1).

The spraying process breaks the paint or coating into tiny droplets that must coalesce on the surface of the part and blend together to form a smooth surface in an action called leveling. For leveling to occur properly, the solvent and paint formula may need to be adjusted to compensate for daily variations in weather. Changes in temperature or humidity can change the volatility of the paint system and affect the time for leveling. Hot, dry days tend to cause the solvent to evaporate before the paint can adequately level, leading to a defect known as **dry spray**.

Electrostatic Spraying **Figure 6-1**

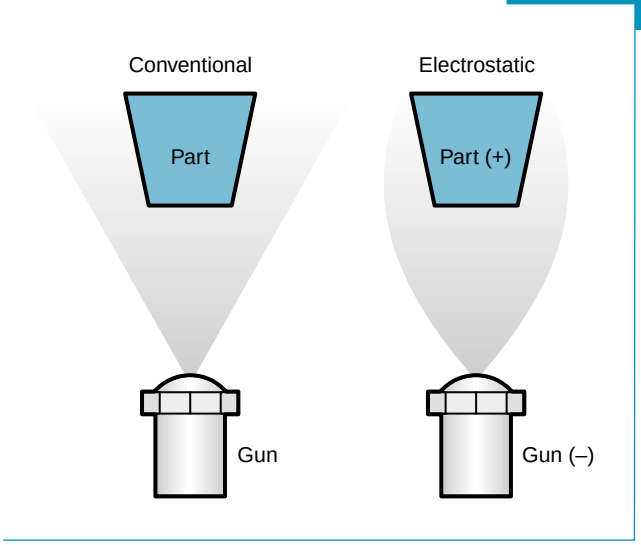

Electrostatic spraying improves coverage and reduces overspray by attracting paint droplets to the part surface.

Crazing and **paint soak**, two painting defects unique to molded plastic parts, are both affected by:

- High molded-in surface stresses on the molded part;
- The composition and morphology of the polymer; and
- The particular paint solvent system used in the formulation.

High surface stresses tend to occur near gates, at knit lines, and in areas of non-uniform wall thickness. An aggressive solvent can cause small cracks in these areas that can lead to dullness known as crazing. In severe cases, large areas of the surface can become rough and appear as if the paint has soaked into the plastic. This condition is called paint soak.

To minimize these problems, the parts must be designed and processed to minimize surface stresses. To reduce the high degree of surface orientation at gates and abrupt geometry changes that can lead to paint soak, consider adding 0.008-inch deep grooves in the mold steel on the back surface. Orient the grooves perpendicular to the advancing flow front in the problem areas. The groove-to-groove (or ridge-to-ridge in the part) spacing should be no greater than the part wall thickness.

High mold and melt temperatures, good venting, and proper gate design and placement also tend to reduce surface stresses and paint soak problems. In addition, paint manufacturers can tailor solvents and paint systems for a given polymer to reduce the surface attack problem.

Other Painting Methods

In addition to spraying, other common methods of paint application include brushing, pad painting, rolling, wiping, and dipping. Each has advantages in specific kinds of applications.

Brushing is most commonly used in automated stripe-painting applications. Programmable machines manipulate the brush position and vary the application pressure to adjust the stripe pattern and width.

Pad painting uses a patterned resilient pad to transfer paint to the plastic substrate much like a rubber ink stamp applies ink to paper. In an automated process, a roller applies a film of paint to a transfer plate. The patterned pad with raised figures is first pressed onto the film of paint and then onto the plastic part being decorated.

Rolling applies paint to raised surfaces on a plastic part by means of a rubber or felt roller (see figure 6-2). A transfer roller is commonly used in production to maintain a uniform film thickness on the paint roller. The paint viscosity must be high enough to prevent running.

Figure 6-2 **Roller Painting**

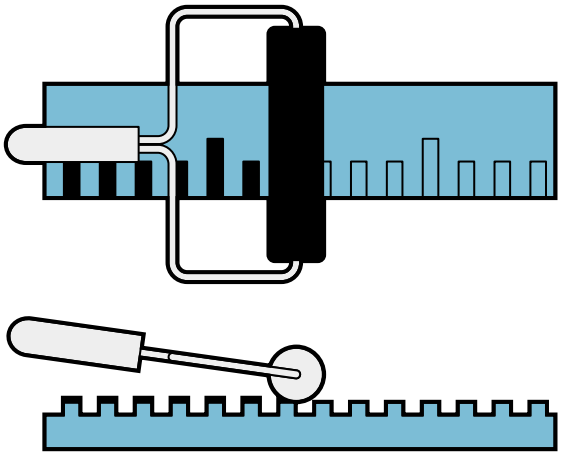

The roller transfers paint to the raised features on the molded part.

Wiping applies paint to molded inlays such as dial numerals and indented letters. In this method, high viscosity paint is first applied to coat the inlay features and surrounding area. After a period of time, usually ten to thirty minutes, the excess paint is wiped from the surrounding areas with a solvent-impregnated rag or brush, leaving paint in the inlays.

Dipping, a simple and inexpensive painting method, uses a conveying system to first submerse parts in a tank of paint and thinner, and then move the parts through subsequent stages for dripping, draining, and drying. Because few applications require complete paint coverage on all surfaces, dipping is used less often than spraying. Dipping is commonly used to apply base coats to parts prior to vacuum metallizing or sputtering.

Masking

Part drawings should clearly specify areas to receive paint, areas which must be free from paints, and areas that can receive overspray. Paint-free areas will probably require masking: a procedure often more complicated and labor-intensive than the actual painting. Some considerations to address with masking include:

- Take steps in the part design stage to avoid masking or at least simplify the masking process;
- Avoid vaguely defined transitions between masked and painted features such as fillet radii and rounded or irregular surfaces;

- Allow at least 1/8 inch between masked areas and the part edge;
- Avoid thin or intricate masking; and
- Work closely with your painting and masking experts to avoid unnecessary work and expense.

To prevent leakage between the stencil or mask and the plastic part, the mask and stencils must fit tightly against the molded part. For this to happen, the parts must be molded to tolerance without shot-to-shot variations in size or shape. The masks and stencils must also be held to tight tolerances. Buildup on the masks and stencils must be periodically cleaned to maintain a good fit. To avoid interrupting production to clean masks, try to have several masks for each masking job.

Other Design Considerations for Painting

In all application methods, parts should be clean and free of surface contamination for good paint adhesion. When possible, design parts to release from the mold easily, so they can be ejected without using external mold release sprays. Oils from hands can also contaminate the part surface. Consider designing designated handling areas or features to reduce contamination in critical painting areas.

Part design can have a direct impact on the ease and cost of painting. For instance, spray painting, a line-of-sight process, works within a short nozzle-to-part distance range. To achieve uniform coverage, avoid undercuts and deep, narrow recesses, which may not coat completely. Sharp corners can be difficult to coat sufficiently and may chip or wear through. Consider painting transparent parts on the back surface (or second surface) to protect the paint from scratches and abrasion.

Brittle coatings and paints can greatly reduce the impact performance of painted plastic parts. Cracks in the paint or coating act as stress concentrators to initiate fracture in the plastic substrate. Exercise extra care in the design and paint selection for painted parts subjected to impact loads. Flexible paint systems, such as two-part urethanes, tend to perform better in impact applications.

IN-MOLD DECORATING

Applying decorations during molding, instead of as a secondary post-mold process, can lower your decorating costs. In-mold decorating methods tend to reduce or eliminate VOC emissions, and eliminate many of the problems associated with other decorating methods such as solvent/substrate compatibility problems, heat-curing restrictions, and painting line costs. Some methods also offer options not feasible in conventional painting, such as applying multicolor graphics and patterns. This section discusses two common in-mold decorating methods.

In the **powdered-paint** method, powder is sprayed onto the mold surface before the thermoplastic resin is injected. The paint then melts and bonds to the plastic-part surface as the part solidifies. Because painting takes place in the mold, there is no need for an expensive paint line. However, this process does add cost and complexity to automate the painting process at the mold. It also can generate considerable housekeeping problems at the molding press.

In-mold transfer decoration involves transferring graphics from a preprinted carrier, typically polyester film, to the plastic surface during molding. The decorated film is placed into the mold either as a separate sheet held by electrostatic charge or as part of an indexed roll that positions the graphics over the cavity surface. Under the heat and pressure of molding, the decoration transfers from the film to the molded part. The transfer film is then removed and discarded.

In-mold transfer decoration offers multiple colors in a single operation as well as greater design freedom than most traditional decorating methods.

Manufacturers can also quickly change designs by simply switching the printed films. This process has been used with many Bayer resin types including ABS, SAN, and certain PC grades.

The process has several notable limitations. Wrinkles and indexing problems can arise on large parts or in parts with complex or deeply contoured geometries. Also, because the decoration is on the part outer surface (first surface), it is vulnerable to abrasion, chemical attack, and UV degradation. For these reasons, in-mold transfer decoration may not be suitable for many applications.

Figure 6-3 **Film-Insert Molding**

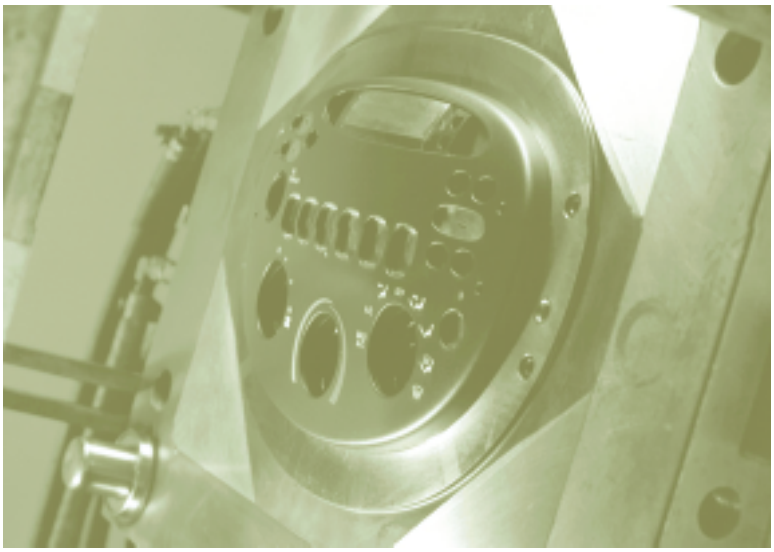

The decorated, formed film is positioned in the mold and then backfilled with transparent polycarbonate.

Figure 6-4 **Film-Insert Molding**

This film-insert-molded control panel has a decorative matte finish with backlit figures and symbols.

FILM-INSERT MOLDING

Film-insert molding differs from conventional in-mold decoration in that the decorated film, either flat or formed, becomes an integral part of the molded product during the molding process. Typically the process begins by forming a pre-heated, printed film, by means of vacuum or high-pressure forming, into the exact shape required to fit tightly into the mold. The formed film is then cut and placed into the mold. During molding, plastic injects behind the film forming a molded part with an integral film layer. Figures 6-3 and 6-4 show a decorated film in place in the mold in preparation for molding and the final mold part.

The process incorporates a variety of film options. In **first-surface film decorating**, the print design is printed on the outer surface. This places the film substrate between the printing and the part, and protects the printed graphic from the direct contact with the molten plastic. Protective graphic hard coats provide various levels of protection against chemicals and wear.

Single-layer, **second-surface film decorating** places the printed graphic on the inner surface of a transparent film substrate. This configuration protects the graphic from the environment but places it toward the molten plastic during molding. This can lead to distortion of the printed graphic at hot spots such as the gate area. To protect the graphics, a second film can be bonded to the printed surface using a heat-activated adhesive. This process works particularly well with backlit parts.

Film insert decorating advantages include:

- Design freedom to decorate compound curves and complex geometries;
- Multi-color graphics in a single step;
- Options for both opaque and transparent graphics;
- Long-lasting finishes; and
- Reduced decorating costs.

Bayer developed insert mold decoration in the 1980s and is a leader in the development and refinement of this important decorating technology. Contact your Bayer sales representative for more information and assistance regarding potential film insert molding applications.

METALLIC COATINGS

Metallic coatings are applied to plastic parts for decoration or for a variety of functional reasons. Decorative metallic coatings enable plastic parts to function as economical, lightweight alternatives to metals in applications such as automotive grilles and trim hardware (see figure 6-5). Functional coatings can provide electromagnetic shielding, circuit paths, or reflective surfaces for lighting applications. The processes for applying metallic coatings include electroplating, electroless plating, vacuum metallizing, and sputter coating. These are discussed in the following sections.

Electroplating

Electroplating can provide a durable, high-quality finish for a variety of applications. Although many polymers can be electroplated, only a few polymer families obtain the adhesion and appearance required by high-performance applications. Special plating grades of Lustran ABS meet the performance requirements of many tough automotive and appliance applications. Certain Triax and Bayblend blends containing ABS also plate well and can provide reasonably tough finishes.

Figure 6-5 **Metallic Coatings**

Decorative metallic coatings enable plastic parts to function as economical, lightweight alternatives to metal.

Prior to electroplating, the non-conductive plastic surface of most plastics must first undergo an electroless chemical process to deposit a conductive metallic film layer. The electroless process usually involves immersing the parts in a series of specially formulated, aqueous baths and rinses to clean, etch, and activate the part surface. Then, a metallic film layer, such as copper, is chemically deposited on the part. After this treatment, more conventional metal-plating methods apply additional metal layers to the now-conductive surface. A common plating combination is nickel over copper. Many electrical-shielding applications skip the electroless step and apply only an **electroless plating** layer to the inside surface of the housing or device (see figure 6-6).

Figure 6-6 **Electroless Plating**

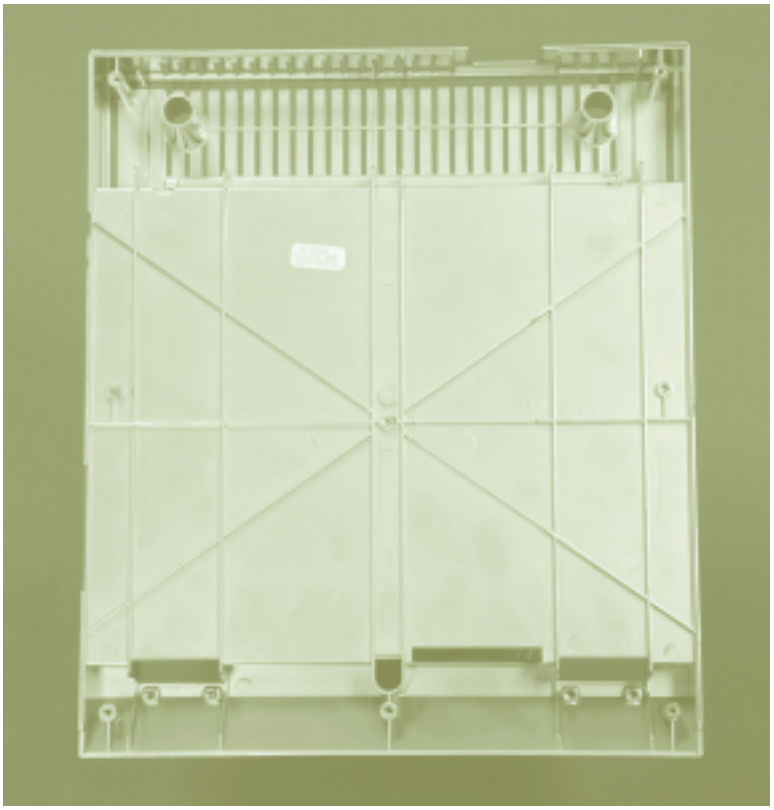

Electroless plating provides EMI shielding for electrical housings.

Figure 6-7 **Plating Buildup**

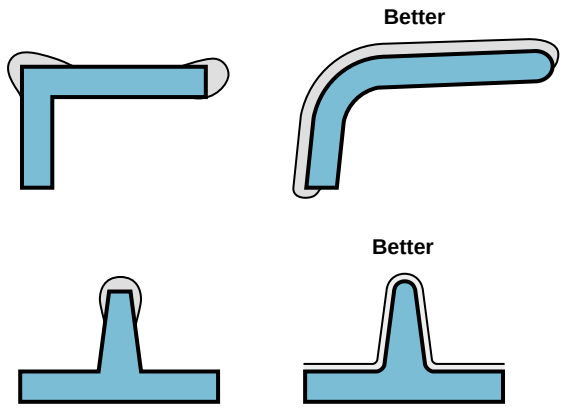

Round corners and edges to prevent excessive plating buildup.

Design Considerations for Electroplating

The electroplating process places special requirements on the plastic part design. Because electric current density distribution over the part surfaces determines plating thickness, high current density at edges, notches, and outside corners can lead to excessive plating buildup (see figure 6-7). Recessed areas plate at lower current densities and tend to plate much thinner than other areas. To minimize these problems consider the following:

- Add a radius of at least 0.010 inch to all plated edges.
- Include a 1/16-inch minimum radius on all outside corners.
- Avoid extreme recesses that could lead to inadequate plating thickness.

During plating, molded parts mounted on specially designed plating racks pass on conveyors through the various baths and rinses. These racks both secure and orient the parts for total immersion and complete draining at each step. Your part must be stiff enough to resist flexure and distortion when clamped onto the rack. Otherwise, the thin-plated layer could crack as the parts are removed and handled. Consider edge-stiffening and surface-crowning to reduce flexure and cracking (see figures 6-8 and 6-9). The points where the rack clamps contact the part will not plate. Plan for these contact points and work with your plater to find suitable clamp locations. Other design considerations include:

- Avoid features that may trap air during immersion in the baths, or hinder rinsing afterwards.
- Design clamping points that secure the part on the rack without flexing it.

Edge Stiffening **Figure 6-8**

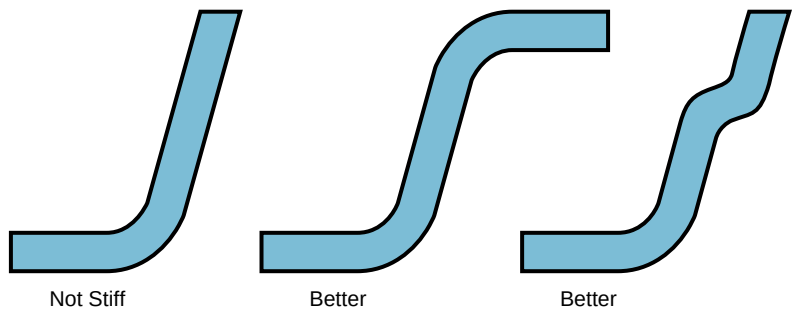

Stiffen edges to prevent damage to plating during racking and handling.

Surface Crowning **Figure 6-9**

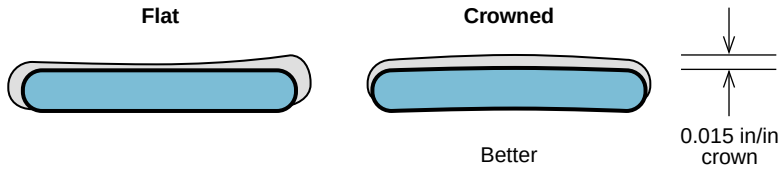

Surface crowning stiffens the surface and promotes uniform plating thickness.

Molding Considerations for Electroplating

The molding process directly affects plating adhesion and end-use performance. High molded-in stresses on the part surface can reduce adhesion and lead to cracking, blistering, and warping in the plated part. To minimize surface stresses, molding resins for plating are normally processed at high mold and melt temperatures and slow filling speeds. Proper drying also prevents moisture-related surface defects that could appear worse after plating. Other molding considerations include:

- Assuring that molded part surfaces are free of oils and contaminates;
- Designing parts and molds to facilitate part ejection without mold-release agents, especially silicone;
- Using self-lubricating ejector pins to prevent oil contamination;
- Designing and maintaining mold and parting lines carefully to prevent sharp or ragged edges that could be exaggerated by the plating process;
- Positioning gates out-of-sight and trimming gates cleanly; and
- Applying a light satin-finish to the mold cavity surfaces to enhance plating adhesion on the molded part.

Vacuum Metallization **Figure 6-10**

Vacuum metallization applies the reflective coating in many lighting applications.

Molding imperfections such as sink and flow marks tend to become exaggerated after plating. All phases of molding must be executed correctly to avoid problems in plating. More so than with most other manufacturing processes, electroplating requires good communication and cooperation between the molder, material supplier, chemical supplier, and plater. Consult your Bayer representative for assistance in selecting the proper resin grades for your electroplating application.

Vacuum Metallization

The **vacuum metallizing** process deposits an extremely thin metallic film (typically 1.5 microns) onto plastic parts in a vacuum chamber. The process usually begins with the application of a specially formulated base coat to smooth out surface irregularities and improve metal adhesion. After curing, the coated parts move to special racks that rotate within the vacuum chamber to provide the uniform coverage during the line-of-sight deposition process.

Deposition takes place by vaporizing the metal, usually aluminum, and then condensing it onto the part surface. Tungsten filaments or electron beams typically provide the energy to vaporize the source metal through direct sublimation from a solid to a vapor. After metallization, decorative parts usually receive a clear topcoat to protect the thin metal film from abrasion. Metallized surfaces in protected environments, such as reflectors in sealed lighting applications, can often skip the topcoat step (see figure 6-10).

A related process, **sputter deposition**, uses mechanical displacement, rather than heat, to vaporize the coating metal. An inert gas plasma impacts the metal to provide the energy for phase transition. Sputter deposition offers thicker metallic layers, and more metal choices than traditional vacuum metallization. Common metals and alloys include chromium, copper, gold, tungsten, stainless steel, and brass. Sputtering also tends to provide better adhesion and abrasion performance than conventional vacuum metallization.

Design Considerations for Vacuum Metallization

Because vacuum metallization processes deposit metal films in a line-of-sight pattern, deep recesses and undercuts will not coat. Typically, the part must rotate for full coverage of surfaces and standing features. Areas "shadowed" by other elements of the part geometry, despite being rotated, will also not coat. Complete front-and-back coverage may require a second racking step to reorient the parts, and an additional pass through the metallization process. Vacuum metallization works best on parts with relatively simple shapes that require coating on just one side. The process is often limited to sizes that will fit in standard vacuum chambers.

Vacuum metallizing is much less sensitive to processing and part design than electroplating. Adherence to standard plastic part design guidelines and good molding practices is usually sufficient to obtain satisfactory results.

EMI/RFI Shielding

With the proliferation of electronic devices such as cell phones and portable computers, Electromagnetic Interference (EMI) and Radio Frequency Interference (RFI) become increasingly important design considerations. EMI and RFI problems occur when electromagnetic energy escapes an electrical device and reaches an unintended device, causing a malfunction or interference. Untreated plastic parts generally appear "transparent" to electromagnetic energy, requiring a secondary shielding process or method when used in electronic enclosures needing EMI/RFI shielding.

A variety of shielding methods exist, including coatings, sheet-metal shrouds, adhesive foils, and special conductive fillers in the molding resin. More often, manufacturers use metallic coating. Each of the metallic-coating processes covered in this chapter thus far — painting (conductive coatings), electroless plating, electroplating, and vacuum metallization — find use in EMI/RFI shielding. A number of factors determine the best process for your application, such as part geometry and size, masking requirements, production levels, and required shielding performance. Contact your Bayer representative for guidance on your specific application.

All electronic devices with metallized parts submitted for recognition under standard UL 746 C must undergo testing of the adhesion between the shielding material and the substrate. UL test QMSS2 evaluates conductive coating and substrate combinations for acceptable levels of adhesion after elevated temperature, humidity, and environmental cycling conditions. Vendors that apply conductive coatings to plastic parts used in devices requiring UL 746 C recognition must meet the requirements of QMRX2. Contact your Bayer representative for information on UL-recognized vendor/coating combinations for EMI/RFI shielding.

Design Considerations for EMI/RFI Shielding

Enclosure design usually affects shielding performance more than the coating process chosen. Any openings in the enclosure assembly, whether they be intentional — holes and cooling vents — or unintentional — gaps along mating edges, can allow electromagnetic radiation to escape. The length of the opening determines the frequency of radiation that can escape. Long gaps, such as between mating halves, could release a wide range of frequencies. For proper shielding, these interfaces require a generous overlap and snug fit.

One design employs contact fingers with a slight interference fit to create a low-impedance connection and reduced gap size. The finger spacing determines the slot length and the minimum frequency that can escape. Consult your shielding experts for help in calculating the correct spacing for your application.

Generally, do not place “noisy” circuit boards close to cooling vents and other possible weak links in the shield. Part designers and shielding experts need to work together early in the design process to assure a good combination of performance and manufacturability.

PRINTING

Printing is often used to apply designs, characters, and markings to parts made from Bayer thermoplastics. The most common printing processes used on plastic parts are discussed in this section.

Pad printing involves pressing ink onto the part from a custom-designed soft inkpad. In one process, the patterned inkpad picks up a film layer deposited onto a transfer plate by a roller. In another process, a smooth pad picks up a pattern of ink from an etched plate that was flooded with ink and then wiped with a blade, leaving ink in the etched recesses of the pattern. In both processes, the loaded inkpad then stamps the pattern onto the plastic part. The soft pad can accommodate textures and many irregular shapes. Irregular shapes cause distortions in the printed pattern that must be compensated by adjustments in the inkpad pattern.

Screening, an inexpensive technique used to decorate flat or cylindrical plastic parts (see figure 6-11), begins with an open-weave fabric or screen, commonly made of silk, polyester, or stainless steel, which has been stretched in a frame. Stencils, often made using a photoetching process, are then placed on the screen where ink transfer is not desired. A rubber squeegee forces ink through the screen and onto the part surface. The screening process requires careful control of the ink viscosity and ambient conditions to avoid fluctuations in temperature and humidity that could cause the screen to stretch or shrink. Screens also require periodic cleaning to remove dried ink that could clog screen.

Screen Printing **Figure 6-11**

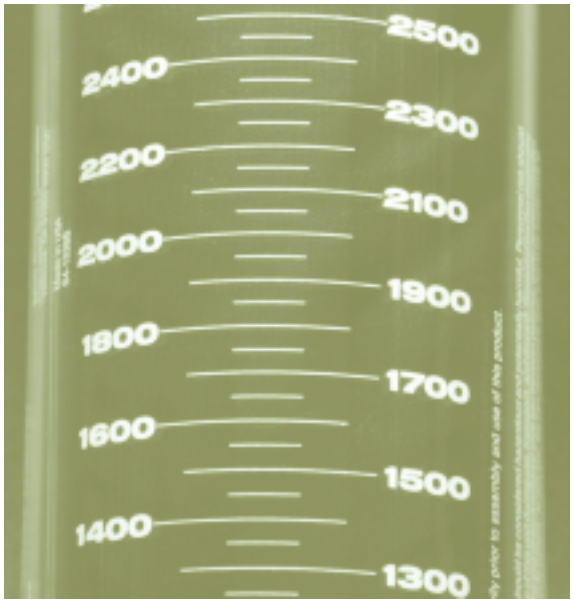

The screen-printing process can apply designs and markings to flat and cylindrical parts.

Laser Printing **Figure 6-12**

Laser printing can produce light or dark markings on plastic parts.

The **sublimation ink transfer** process, commonly used on computer and calculator keys, relies on deep ink penetration to produce abrasion-resistant printed symbols. In this process, heat and pressure vaporize inks printed on special transfer papers that rest against the part surface. Depending on the material and ink system, the ink vapors can penetrate 0.008 inch into the part surface.

Laser printing produces designs and symbols in plastic parts either by direct marking of the plastic or by selective evaporation of a coating applied to the plastic. In direct laser printing, the laser usually burns dark symbols into light-colored parts (see figure 6-12). Some dark-colored plastics have been developed that produce light-colored symbols during laser printing. This process usually does not produce suitable results for back lighting.

White, back-lit symbols can be produced on a dark background by first coating white plastic with an opaque dark paint. The laser then vaporizes the paint in the shape of the symbol, and exposes the white plastic substrate. The pigmented, white plastic reflects the laser beam without marking.

Hot Stamping **Figure 6-13**

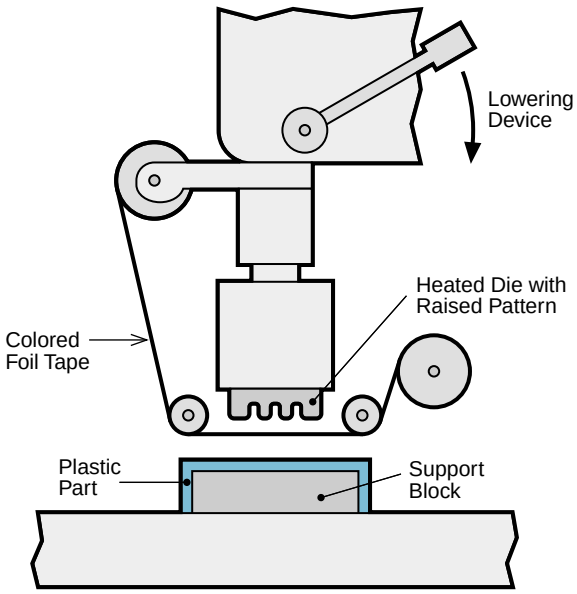

In standard hot stamping, a pattern on the heated die transfers color from the foil to the plastic part.

Dome Printing **Figure 6-14**

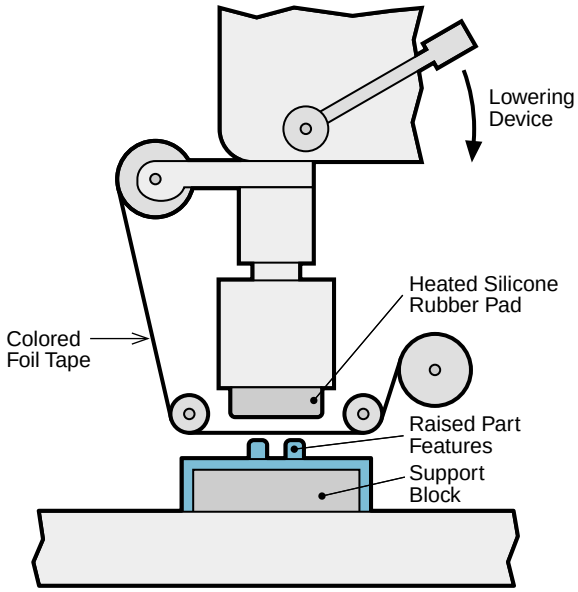

In dome printing, a heated silicone rubber pad transfers color to the raised features on the molded part.

Hot stamping provides a quick and easy method for creating colored indentations for numbers, letters, and demarcations. In this process, a heated stamp presses against a color foil positioned on the part surface. The force and heat simultaneously melt a recess and transfer ink from the foil (see figure 6-13). Dome printing, a variation of the hot-stamping process, prints on top of raised features or patterns in the molded part (see figure 6-14). The reinforced silicone rubber pad used in this process compensates for minor deviations in the part surface.

Your ink and printing-equipment suppliers can offer assistance in selecting the correct process for your part. Their early involvement can prevent problems later in the design and production process. Always pretest printing processes on actual, production assemblies.

LABELS AND DECALS

Self-adhering printed labels and decals provide an easy means for applying items such as logos, model identification, and decorative graphics. Available in transparent, opaque, metallic, or embossed materials, they offer an unlimited choice of shapes and colors. Opaque labels are particularly helpful for hiding trimmed sprue gates. Instead of relying upon a self-adhering backing,

heat-transfer labeling uses a heated platen to release the print from a carrier and attach it to the plastic part. Labels and decals occasionally have problems with adhesion. Carefully pretest and evaluate any proposed adhesive system on actual production parts. Also, avoid placing decals and labels on irregular surfaces, as they will lift more easily.

TEXTURE

Texture affects the look and feel of a molded part, as well as our perception of its quality. Textures can reduce glare, hide molding imperfections, and improve scratch resistance. Because of their ease of molding, thermoplastic resins can duplicate the surface appearance of many natural materials — such as wood, leather, and fabric — to disguise plastic parts.

The thermoplastic molding process also accommodates surfaces ranging from high-gloss to deep texture. For ease of cleaning, many food-contact and health-care products require glossy finishes. Achieving high levels of gloss requires the correct resin, careful mold-steel selection, expensive mold polishing, and meticulous mold care. Glossy finishes are sensitive to mold and processing imperfections, and may readily show scratches. Mold finishing with somewhat coarser abrasive media can produce a brushed finish that doesn't show scratches and imperfections as easily. Glass-bead blasting and light sandblasting of the mold surface can produce uniform matte finishes of varying degrees. Mold surface finishing is discussed in more detail in Chapter 7 (Mold Design) of this manual.

Electric discharge machine (spark erosion) and **photoetching** processes offer greater control over the mold texture. They also make possible patterned textures such as leather and wood grains. Spark-eroded mold-surface textures tend to be smoother and more rounded than the sharp-edged textures produced by photoetching. High-viscosity materials, such as PC and ABS, tend not to reproduce the sharp edges and porous micro finishes of photoetched cavities, as do low-viscosity resins such as nylon. Consequently, the molding resin and processing conditions can lead to quite different part textures from photoetched cavities.

Likewise, parts from molds with similar textures may look different because one used photoetching and another spark erosion. The inherently smooth and rounded textures produced by spark erosion tend to exhibit better scratch resistance than sharp textures. Photoetched mold finishes can be blasted with glass beads to reduce sharp edges and enhance scratch resistance when molding low-viscosity resins. Consider the following when designing parts with texture:

- Avoid abrupt changes in wall thickness, as they can cause noticeable differences in the texture appearance, especially with sharp-etched textures;
- Use spark-eroded textures to hide weld lines and other molding imperfections;
- Consider profile textures, such as rows of lines or fine checkered patterns to hide read-through from linear features such as ribs; and
- Add extra draft when designing parts with textured surfaces to aid in part ejection: typically one degree of additional draft for every 0.001 inch of texture depth.

See the mold and part design chapters in this manual for more information on mold textures and draft.

Chapter 7

MOLD DESIGN

Key to the injection-molding process, the injection mold forms the molten plastic into the desired shape, provides the surface texture, and determines the dimensions of the finished molded article. In facilitating mold-cavity filling and cooling, the mold also influences the molding cycle and efficiency as well as the internal stress levels and end-use performance of the molded part.

The success of any molding job depends heavily on the skills employed in the design and construction of the mold. An injection mold is a precision instrument yet must be rugged enough to withstand hundreds of thousands of high-pressure molding cycles. The added expense for a well-engineered and constructed mold can be repaid many times over in molding efficiency, reduced down time and scrap, and improved part quality.

MOLD BASICS

At the most basic level, molds consist of two main parts: the **cavity** and **core**. The core forms the main internal surfaces of the part. The cavity forms the major external surfaces. Typically, the core and cavity separate as the mold opens, so that the part can be removed. This mold separation occurs along the interface known as the **parting line**. The parting line can lie in one plane corresponding to a major geometric feature such as the part top, bottom or centerline, or it can be stepped or angled to accommodate irregular part features.

- Choose the parting-line location to minimize undercuts that would hinder or prevent easy part removal.

Undercuts that cannot be avoided via reasonable adjustments in the parting line require mechanisms in the mold to disengage the undercut prior to ejection.

TYPES OF MOLDS

The **two-plate mold**, the most common mold configuration, consists of two mold halves that open along one parting line (see figure 7-1). Material can enter

Figure 7-1 **Two-Plate Mold**

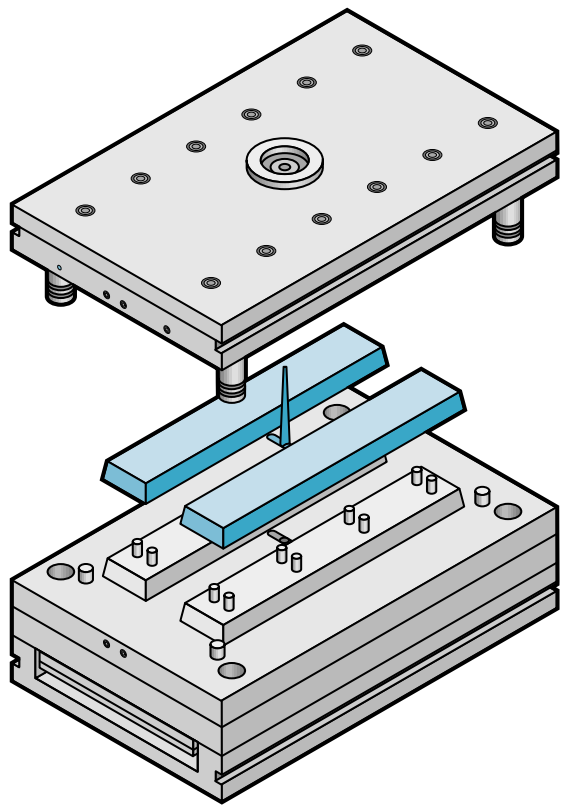

A conventional two-plate mold with two cavities.

Figure 7-2A **Three-Plate Mold**

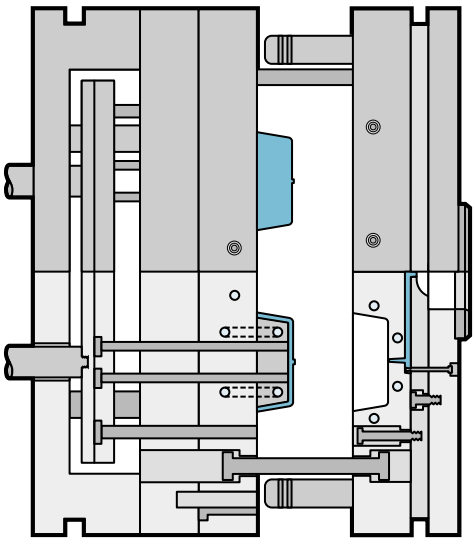

Schematic of a two-cavity, three-plate mold with cutaway view showing first stage of opening.

Figure 7-2B **Three-Plate Mold**

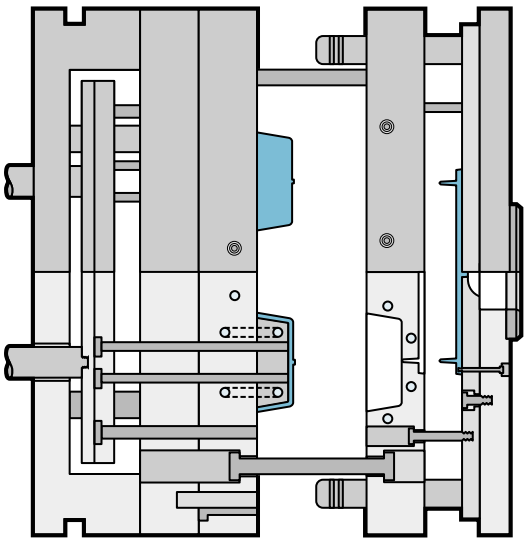

Schematic of a two-cavity, three-plate mold with cutaway view showing second stage of opening.

the mold cavity directly via a sprue gate, or indirectly through a runner system that delivers the material to the desired locations along the parting line. The movable mold half usually contains a part-ejection mechanism linked to a hydraulic cylinder operated from the main press controller.

The **three-plate mold** configuration opens at two major locations instead of one. Figures 7-2A through 7-2C show the mold-opening sequence for a typical three-plate mold. Typically, a linkage system between the three major mold plates controls the mold-opening sequence. The mold first opens at the primary parting line breaking the pinpoint gates and separating the parts from the cavity side of the mold. Next, the mold separates at the runner plate to facilitate removal of the runner system. Finally, a plate strips the runner from the retaining pins, and parts and runner eject from the mold.

Unlike conventional two-plate molds, three-plate molds can gate directly into inner surface areas away from the outer edge of parts: an advantage for center-gated parts such as cups or for large parts that require multiple gates across a surface. Disadvantages include added mold complexity and large runners that can generate excessive regrind. Also, the small pinpoint gates required for

Three-Plate Mold **Figure 7-2C**

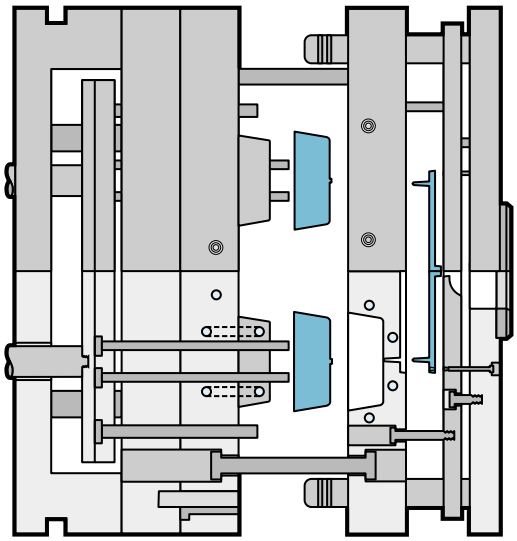

Schematic of a two-cavity, three-plate mold with cutaway view showing final opening phase and stripper plate in forward position.

clean automatic degating can generate high shear and lead to material degradation, gate blemish, and packing problems. Because of the high shear rates generated in the tapered runner drops and pinpoint gates, three-plate molds are not recommended for shear-sensitive materials such as Cadon SMA and materials with shear-sensitive colorants or flame retardants.

Another configuration, the **stack mold**, reduces the clamp force required by multicavity molds. Typically, multiple cavities are oriented on a single parting line and the required clamp force is the sum of the clamp needed by each cavity plus the runner system. In stack molds, cavities lie on two or more stacked parting lines. The injection forces exerted on the plate separating parting lines cancel, so the resulting clamp force is the same as for just one parting line. Stack molds produce more parts per cycle than would otherwise be possible in a given size molding press.

Figure 7-3 **Mold Components**

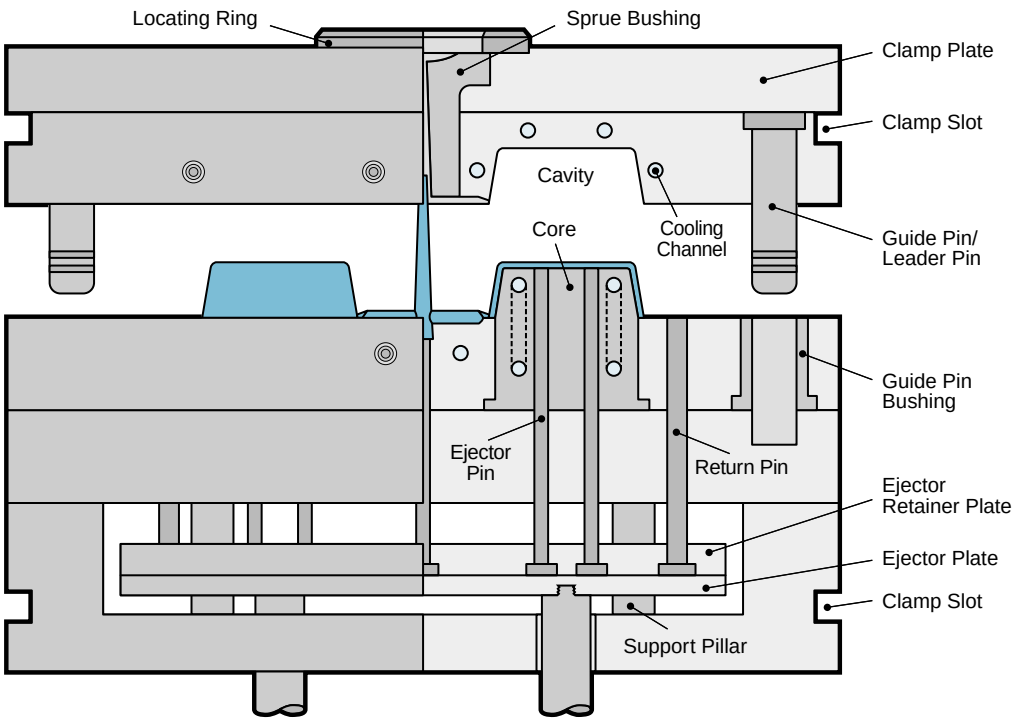

Components of a standard two-plate mold base with two cavities.

MOLD BASES AND CAVITIES

The mold base comprises the majority of the bulk of an injection mold. Standard off-the-shelf mold bases are available for most molding needs. Typical mold bases are outfitted with a **locating ring** (see figure 7-3) and provisions for a **sprue bushing** in the stationary or "A" half of the mold and an ejector assembly in the moving "B" half. Both halves come with **clamp slots** to affix the mold in the press. The "B" half has holes to accommodate bars that connect the press ejection mechanism to the **ejector plate** in the mold. **Leader pins** projecting from corners of the "A" half align the mold halves. **Return pins** connected to the ejector plate corners project from the mold face when the ejection mechanism is in the forward (eject) position. As the mold closes, the return pins retract the ejector plate (if not retracted already) in preparation for the next cycle.

Mold cavities, here meaning core and cavity sets, can be incorporated in the mold three ways: they can be cut directly into the mold plates, inserted in pieces into the mold base, or inserted as complete cavity units. Cutting cavities directly into the mold base can be the most economical approach for large parts and/or parts with simple geometries. When doing so, select the mold base steel carefully. The physical properties of standard mold base steels may be inadequate for heavy-wear areas or critical steel-to-steel contact points. Use inserts made of appropriate materials in these areas.

Assembling the cavity in the mold base lets you select different metals for the various cavity components, optimizing the mold's durability and performance. It also simplifies and speeds repairs for worn or damaged cavity components, especially if you maintain spare mold pieces for vulnerable components. Additionally, assembling the cavities from pieces can simplify component fabrication. Some of the drawbacks of mold-base cavity assemblies include high initial mold cost, less-efficient mold cooling, and potential tolerance accumulation problems with the cavity components.

Cavity units offer many of the same advantages found in mold-base cavity assemblies. Because many cavity units are face-mounted in the mold base for quick removal, worn or damaged cavities are easily replaced. Some mold bases are designed to accept standard cavity-insert units for rapid part change while the mold is still in the molding press. These cavity units typically have independent cooling circuits and ejector mechanisms that automatically connect to the mold-base ejector system.

MOLDING UNDERCUTS

Undercuts, part features that prevent straight ejection at the parting line, tend to increase mold complexity and lead to higher mold construction and maintenance costs. Whenever feasible, redesign the part to avoid undercuts. Minor part design changes can often eliminate problematic undercuts in the mold. For example, adding through-holes can give access to the underside of features that would otherwise be undercuts (see figure 7-4). Likewise, simple modifications enable the mold to form a hole in the sidewall with **bypass steel** rather than with a side-action mechanism. For more information on design alternatives to avoid undercuts, see the section on undercuts in Chapter 2 of this manual.

Undercut features that cannot be avoided through redesign require mechanisms in the mold to facilitate ejection. These types of mechanisms include side-action slides, lifter rails, jiggler pins, collapsible cores and unscrewing mechanisms. The remainder of this section discusses these options.

Side-action slides use cam pins or hydraulic (or pneumatic) cylinders to retract portions of the mold prior to

Figure 7-4 **Undercut Alternatives**

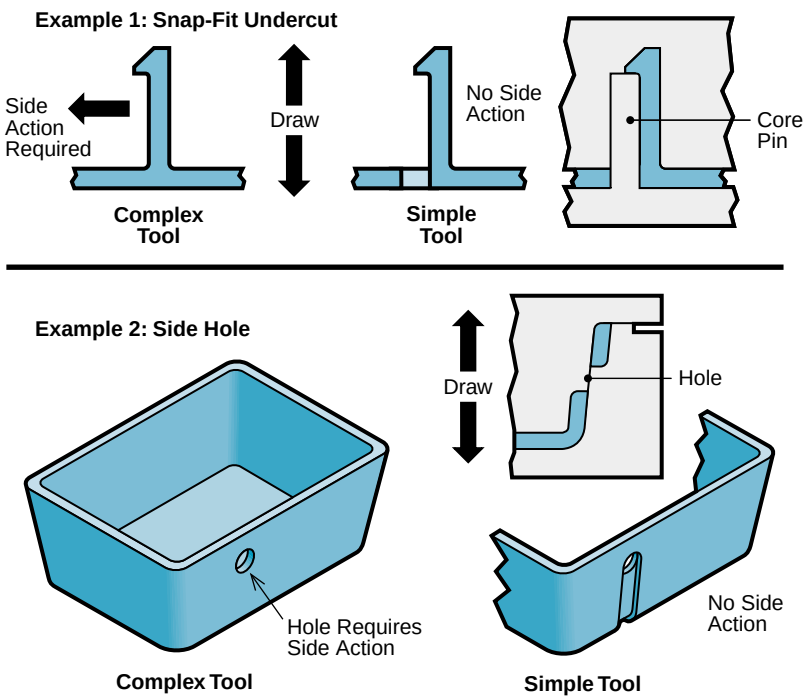

Simple/complex part design for undercuts.

Side-Action Slide **Figure 7-5**

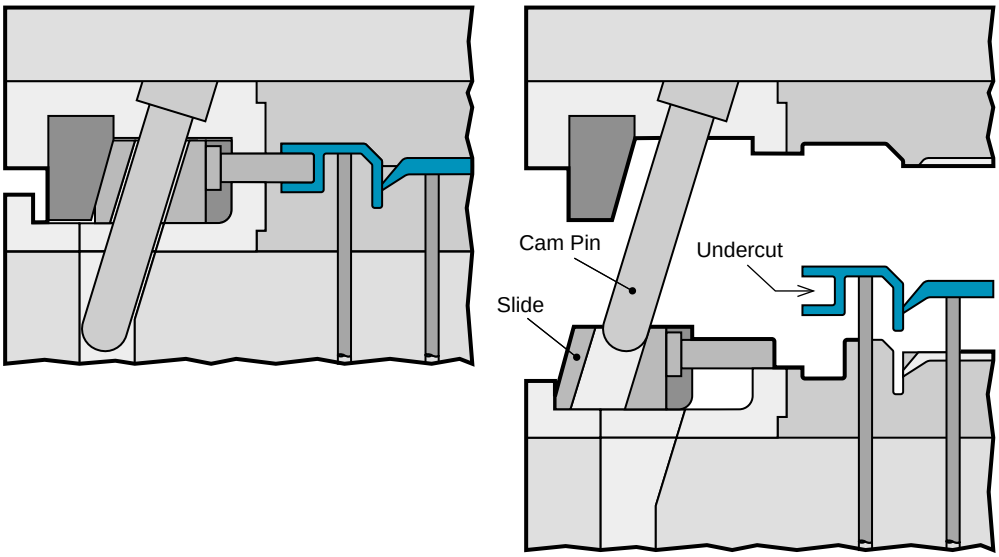

The cam pin retracts the slide during mold opening.

Lifter **Figure 7-6**

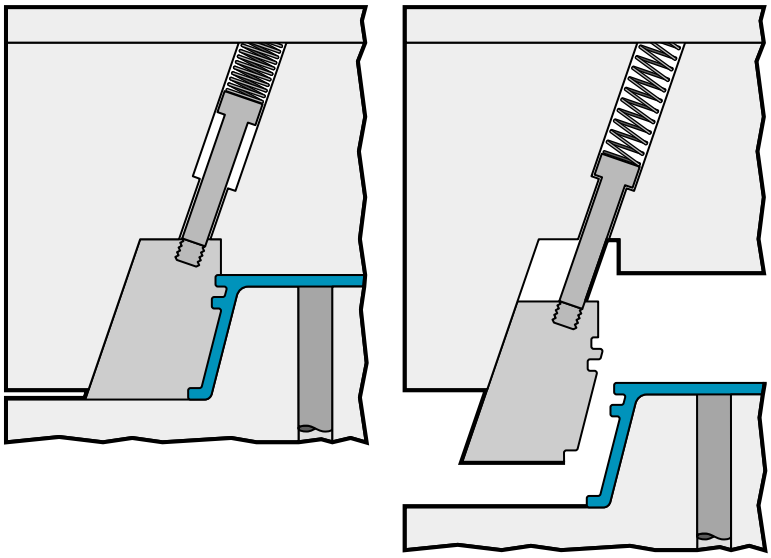

Typical spring-loaded lifter mechanism.

ejection. Cam-pin-driven slides retract as the mold opens (see figure 7-5). As the mold closes, the cam pins return the slides to their original position for the next injection cycle. Slides driven by hydraulic or pneumatic cylinders can activate at any time during the molding cycle, an advantage in applications requiring the slides to actuate prior to mold opening or closing.

Shallow undercuts can often be formed by **spring-loaded lifters** (see figure 7-6) or **lifter rails** attached to the ejector system. These lifters move with the part on an angle during mold opening or ejection until the lifter clears the undercut in the part. A variation on this idea,

Jiggler Pin **Figure 7-7**

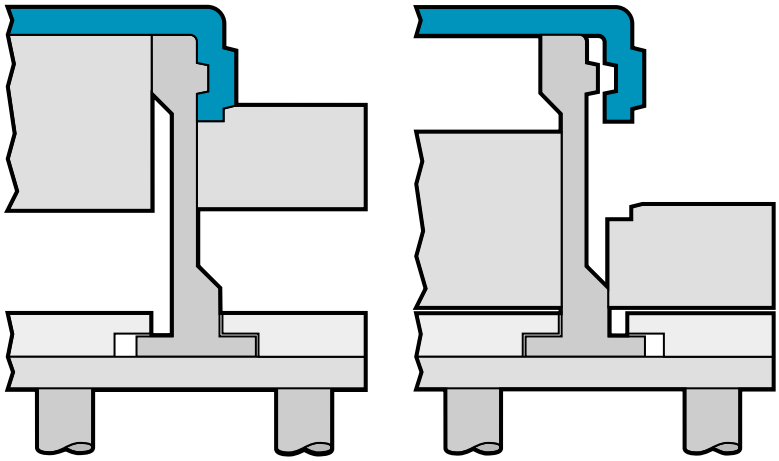

Angled surfaces slide the jiggler pin to clear the undercut during ejection.

Unscrewing mechanisms are commonly used to produce internal threads. A variety of devices can drive the rotation of the threaded cores, including rack-and-pinion devices actuated by mold opening, motors, or hydraulic cylinders; or motor-driven gear and chain mechanisms. The mold design should include provisions to lubricate the various moving parts of the unscrewing mechanism.

Slides, cams, collapsible cores, and unscrewing mechanisms add to the cost and complexity of the mold, as well as the mold maintenance cost. Investigate the **"jiggler" pin** (see figure 7-7), has angled surfaces to guide the pin away from the undercut during ejection, then return it to the molding position as the ejector system retracts.

Features such as internal threads, dimples, slots, or grooves on the inside of holes or caps may require **collapsible cores**. These complex cores are made in segments that collapse toward the center as they retract during mold opening (see figure 7-8). Available in a variety of standard sizes from various mold-component suppliers, these specialty cores are typically modified to produce the desired undercut shape. The number and complexity of individual core components limit the minimum size of collapsible cores. Collapsible cores are rarely used for inside diameters less than 0.625 inch.

Figure 7-8 **Collapsible Core**

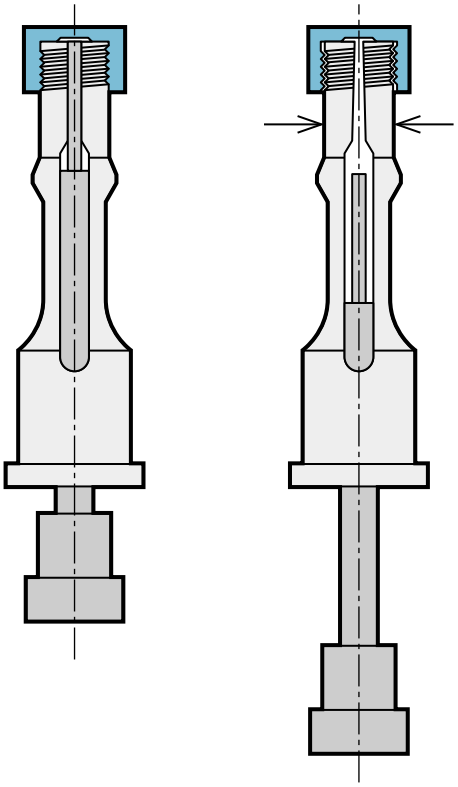

Standard-style collapsible core pin in expanded and contracted position.

options that avoid complex mold mechanisms. Clever part design can often eliminate troublesome undercuts. Some undercuts are most economically produced as secondary operations, particularly if they can be automated or performed within the cycle at the press.

PART EJECTION

Typically, molds have ejector systems built into the moving "B" half. The ejection unit of the molding press activates these systems. Rods linking the press-ejector mechanism to an ejector plate in the mold enable the press controller to control the timing, speed, and length of the ejection stroke. Reverse-injection molds eject parts from the stationary side of the mold via independent ejection mechanisms operated by springs or hydraulic cylinders. This configuration facilitates direct injection onto the inside or back surface of cosmetic parts. The added complexity of reverse-injection molds adds to the mold cost.

Specialized ejection components, such as knockout (KO) pins, KO sleeves, or stripper plates, project from the mold ejector plate to the part surface where they push the part out of the mold (see figures 7-9 through 7-11). These topics are discussed in this section.

The common, round **knockout** pin provides a simple and economical method for part ejection. Manufactured with high surface hardness and a tough core, these inexpensive, off-the-shelf items resist wear and breakage. The

Figure 7-9 **Ejector Pins and Blades**

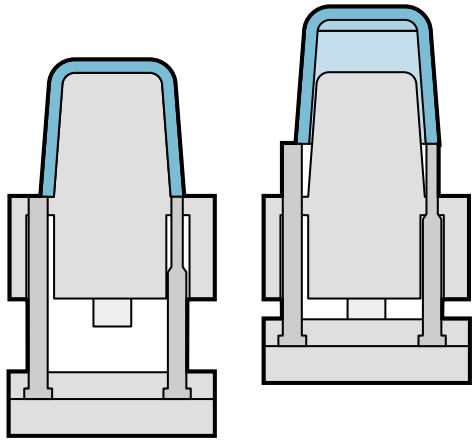

Ejector pins and ejector blades push the part off of the core as the ejector plate moves forward.

Figure 7-10 **Ejector Sleeves**

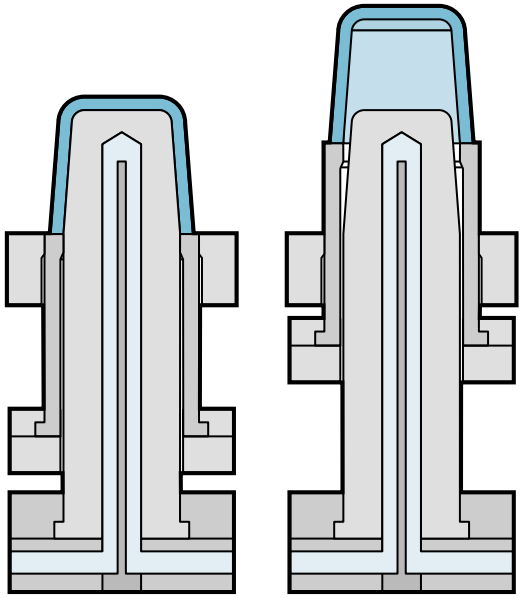

Cylindrical ejector sleeves provide maximum ejection contact area along the edge of circular parts.

Figure 7-11 **Stripper Plate**

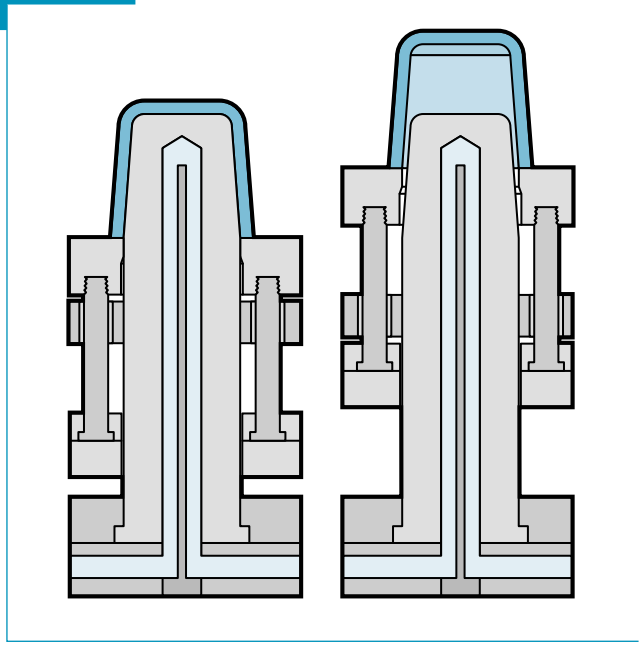

In molds with stripper-plate ejection, the face plate which forms the edge of the parts moves forward stripping the parts from the core.

Figure 7-12 **Angled Ejector Pin**

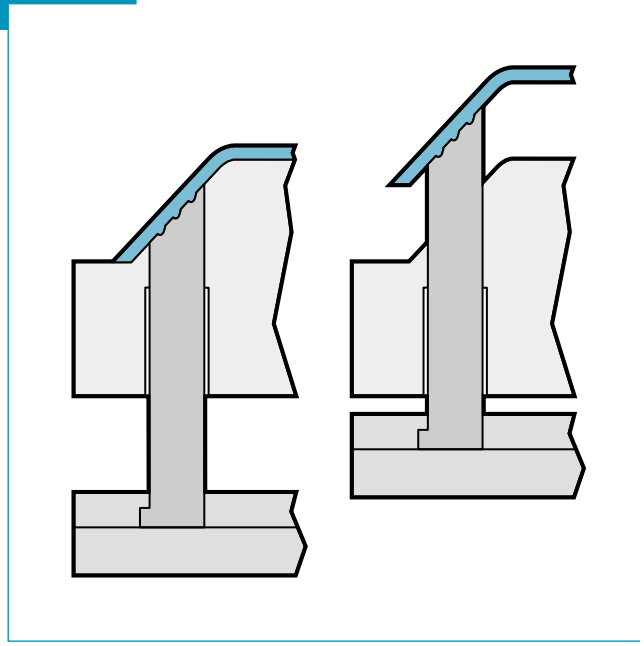

Ejector pins on angled surface must be keyed to prevent rotation and often require grooves to prevent sideways deflection of the ejector pin.

mold maker selects the desired diameter and shank length from the vast array of standard sizes and machines it to fit. The fit of the ejector pin into the round ejector hole must be held to a tight tolerance to avoid flash. Worn ejector holes can be refitted with 0.005-inch oversized pins available for standard diameters. **Ejector blades**, KO pins with a rectangular cross section, operate much the same as standard round pins, but can be more difficult to fit and maintain. Typically, they are used on the edges of ribs or walls that are too thin for standard round pins.

KO pins usually extend to the surfaces lying parallel to the mold face. If KO pins push on angled surfaces, consider adding grooves to the part design to prevent pin deflection (see figure 7-12). KO pins extending to narrow walls and edges can be stepped or positioned, so that only a portion of the pin contacts the molded part (see figure 7-9). This avoids using small-diameter KO pins that are more difficult to maintain and can deflect or bend.

KO pins leave **witness marks**, small indentations or rings where the pin contacts the part, that could be objectionable on cosmetic surfaces. Additionally, they can read-through to the opposite surface if the part is difficult to eject, or if the ejector area is too small.

Many factors determine the amount of ejector area needed, including the part geometry, mold finish, material-release characteristics, and part temperature at the time of ejection. To prevent damage during ejection, thin-walled parts generally require larger ejectors and greater ejector area than comparable parts with thicker walls.

Draw polishing the mold steel in the direction of ejection generally helps ejection. Thermoplastic polyurethanes, exceptions to this rule, usually eject more easily from molds with frosted finishes that limit plastic-to-metal contact to peaks in the mold texture.

Air-Poppet Valve Figure 7-13

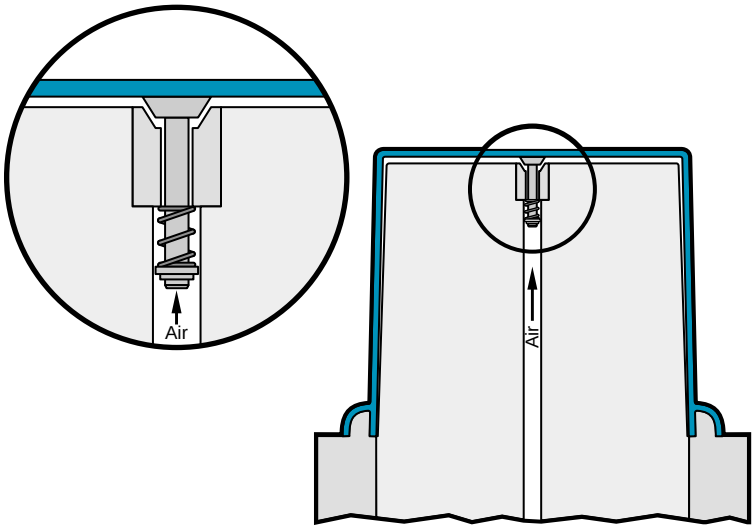

Air valve at the top of a core to relieve vacuum.

Also, adding a generous amount of **mold draft** helps ejection. Draft refers to the slight angle or taper added to part features to ease part ejection. Most Bayer materials require at least one degree of draft for easy ejection. Lustran SAN resins and Desmopan TPU resins require at least two degrees of draft. See the section on draft in Chapter 2 for additional information.

Materials with internal **mold release** can reduce the required ejection force and alleviate some ejection problems. Spray mold releases, though often effective as a short-term fix, can lengthen the molding cycle and lead to cosmetic problems. If planning to use a spray mold release, check it for chemical compatibility with your resin.

Ejection difficulties can arise if a vacuum forms between the part and mold during ejection. Typically, this difficulty develops in deeply cored, closed-bottom parts. Off-the-shelf mold components such as **air-poppet valves** (see figure 7-13) can alleviate the problems. Air-poppet valves relieve the vacuum and deliver pressurized air between the part and mold surface during ejection.

Core shift and **mold flexure** can pinch part surfaces, hindering ejection. To prevent this problem, add support to the mold or core, or change the filling pattern to balance the injection forces.

MOLD VENTING

As molten plastic enters the mold, it quickly displaces air in the tightly sealed mold. Although some air escapes through the parting line or loose-fitting ejectors or slides, most molds need strategically placed vents for rapid and complete air removal. This section discusses vent design and placement.

Parting-Line Vents

As a first choice, place vents along the mold parting line. Typically easy to cut and keep clear of material, vents in the parting line provide a direct pathway for air escaping the mold.

Figure 7-14 shows standard parting-line vent guidelines for Bayer thermoplastic resins. To prevent material from flowing into the vent during filling, the depth of the first 0.150 inch to 0.300 inch of vent length must be small, typically less than 0.0020 inch for amorphous resins and less than 0.0015 inch for semi-crystalline resins. Your resin selection and processing conditions determine the vent's maximum depth. The ranges given in figure 7-14 apply to typical molding conditions. Other rules of thumb for venting:

- The amount of venting needed increases with part volume and filling speed;
- Add more vents or widen existing ones to increase venting; and
- To avoid flash, do not increase vent depth beyond the guidelines.

For the vast majority of resins and part geometries, more vents are better. The exceptions are resins with components — usually flame retardants or other additives — that can boil to the surface at the flow front and deposit on the mold surface and vents. These resins rely on pressurized air in front of the flow front to hold volatiles in the material. Over-venting can prevent the flow front from generating the required pressure. Add vents sparingly in molds for these materials. Carefully review Bayer's Product Information Bulletin for specific venting recommendations, particularly for flame-retarded materials.

Vent Placement

Vents should be placed at various locations along the runner system and part perimeter, but they are especially needed at the last areas of the mold to fill (see figure 7-15). Typically these areas are located on the parting line and lie farthest from the gate. When the last area to fill is not vented, air may become

Vent Depth **Figure 7-14**

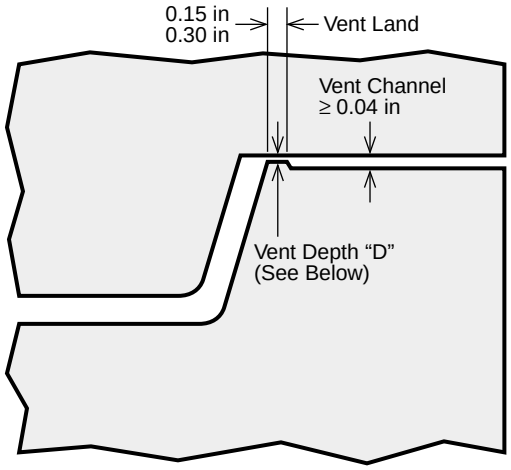

Typical Vent Depth "D" Range for Bayer Resins

0.0010 – 0.0020 in	**Amorphous Resins: Makrolon, Apec, Bayblend, Makroblend, Texin, Desmopan, Cadon, Lustran, and Centrex.**
0.0005 – 0.0015 in	**Semicrystalline Resins: Durethan, Triax, and Pocan.**

Note: For applications requiring minimal flash, reduce the upper limits of the above ranges by 0.0005 in.

Vent Placement **Figure 7-15**

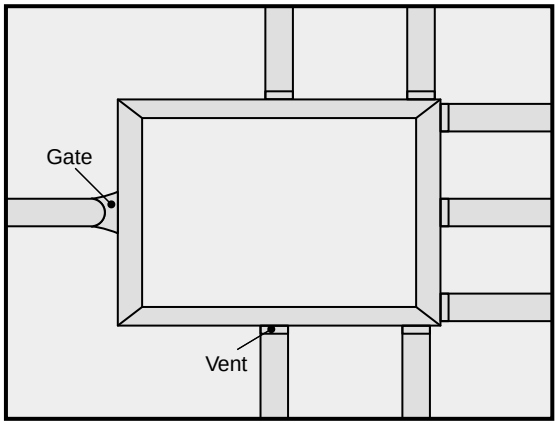

Parting-line vents were positioned along the perimeter of this cavity insert. Extra vents were directed to corners opposite the gate that fills last.

trapped in the mold, preventing complete filling of the cavity and causing a gas burn on the part. The trapped air is super heated during compression and in severe cases can pit or erode the mold steel.

When feasible, move gates or vary part thickness to change the filling pattern and direct air to parting-line vents. If air-trap areas persist, consider using ejector pins modified with flats for venting (see figure 7-16). **Ejector-pin vents** usually self clean with each ejection stroke. Air-trap areas not accessible by ejector-pin vents may require vents placed along mold inserts or splits in the mold. This type of vent usually requires periodic disassembly for cleaning. Porous metal inserts can also provide venting for difficult air-trap areas but may require periodic cleaning.

Part features produced by blind holes in the mold, such as posts and bosses, require venting at the last area to fill, usually the tip or end. Bosses can usually vent along the core insert forming the inside diameter of the boss. Posts usually require ejector-pin vents at the tip of the post. Other venting issues you should address:

- Direct mold filling along the length of the rib so gasses can escape at the ends; and
- Round or angle the ends of standing ribs to prevent air entrapment (see figure 2-21 in Chapter 2).

Air trapped in unvented pockets or recesses in the mold can exit these areas behind the flow front and lead to splay or teardrop-shaped surface defects.

Severe weld lines often form where flow streams meet head on, especially at the end of fill. You can often improve the strength and appearance of these weld lines by installing **overflow wells** (see figure 7-17). Overflow wells are modified vent features that provide an extra-deep vent channel, usually about one-third the part thickness, that emp-

Ejector-Pin Vent **Figure 7-16**

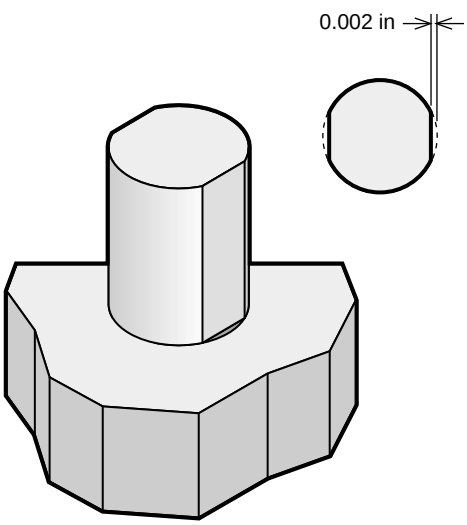

Ejector pin in forward position showing flats added to provide venting.

Overflow Well **Figure 7-17**

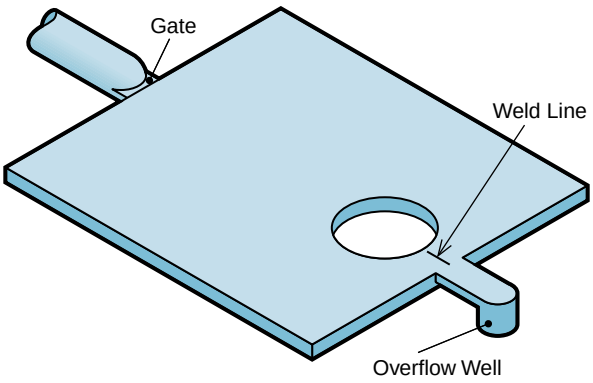

Overflow wells can improve the strength and appearance of weld lines.

Sprue Bushing **Figure 7-18**

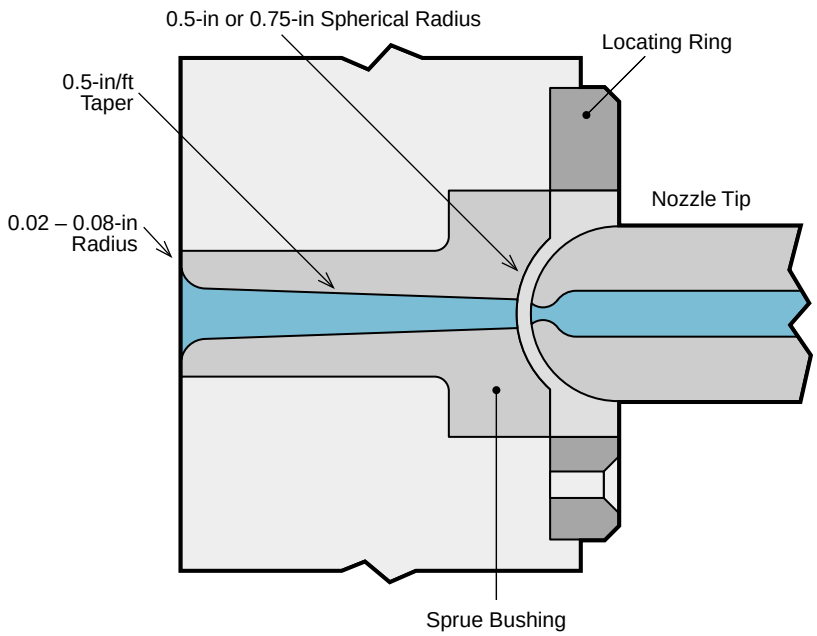

Sprue bushings convey the melt from the press nozzle tip to the mold parting line.

ties into a cylindrical well. Venting air escapes the well around a shortened ejector pin fitted with a 0.002-inch clearance. Cool material at the leading edge of the advancing flow fronts merges and enters the overflow well leaving hotter material to mix and fuse at the weld line. The overflow well is ejected with the part and clipped off after molding. Overflow wells can also provide ejector-pin locations for parts such as clock faces or instrument lenses that cannot tolerate ejector-pin marks on the part surface.

SPRUES, RUNNERS, AND GATES

Standard horizontal clamp presses deliver molten resin to the mold through a hole in the center of the stationary press platen. A material-delivery system — usually consisting of a sprue, runners, and gates — then leads the resin through the mold and into the cavity. These components of the material delivery system are discussed in this section.

Sprues

The **sprue**, oriented parallel to the press injection unit, delivers resin to the desired depth into the mold, usually the parting line. Though they can be cut directly into the mold, sprue bushings are usually purchased as off-the-shelf items and inserted into the mold (see figure 7-18). The head end of the sprue bushing comes premachined with a spherical recess — typically 0.5- or 0.75-inch radius — to receive and seal off against the rounded tip of the press injection nozzle. The sprue bushing flow-channel diameter typically tapers larger toward the parting line at a rate of 0.5 inch per foot. This eases removal of the molded sprue. The sprue orifice size, the diameter at the small end, comes standard in odd 1/32s from 5/32 to 11/32 inch.

Sprue design can affect molding efficiency and ease of processing. In many molds, the greatest restriction to material flow occurs at the press nozzle tip and sprue orifice. These areas see the highest volumetric flow rate of the entire system. An excessively small sprue orifice can generate large amounts of material shear and lead to material degradation, cosmetic problems, and elevated filling pressure. The problem can be worse in the press nozzle tip because the tip orifice must be slightly smaller than the sprue orifice to avoid forming an undercut.

The volumetric flow rate used during filling largely determines the correct sprue orifice size. Shot size and filling speed, as well as the flow properties of the specific resin, govern the required flow rate.

Figure 7-19

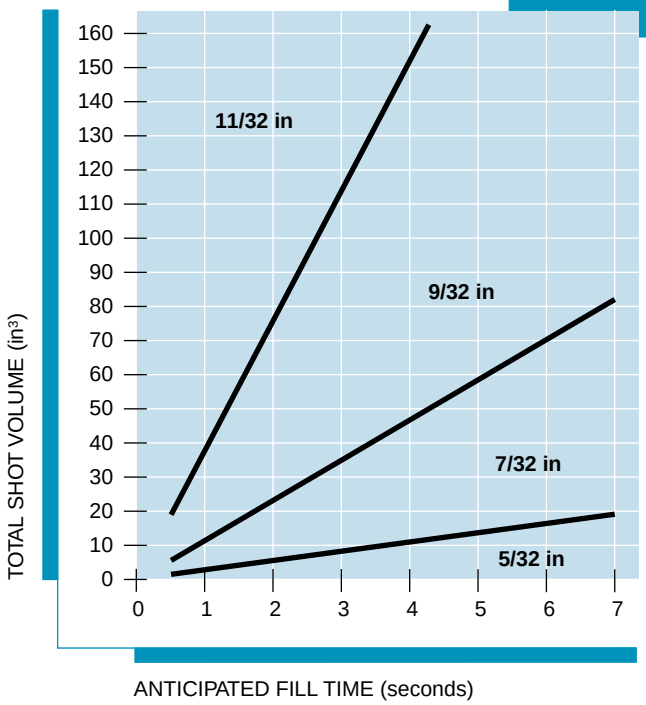

Sprue-size (small-end diameter) recommendations as a function of shot volume and fill time.

- Large parts and/or parts needing fast filling speeds require large sprue orifice diameters to avoid problems associated with excessive flow shear.

- As a general rule, amorphous resins and blends such as Makrolon polycarbonate, Lustran ABS, and Bayblend PC/ABS resins require larger sprues and runners than semicrystalline resins such as Durethan PA 6 and Pocan PBT.

Figure 7-19 shows typical sprue sizes for Bayer amorphous resins as a function of shot size and filling time. Because the maximum shear rate in a sprue occurs at the orifice and the majority of shear heating and pressure loss takes place in the first two inches, these guidelines should apply to sprues of various lengths. Part geometry influences filling time to some extent. For example, parts with a mix of thick and thin features may need a fast filling speed to prevent premature cooling of the thin features. Other geometries may require slower filling speeds to prevent problems such as cosmetic defects or excessive clamp tonnage requirements.

The diameter at the base of the sprue increases with increasing sprue length. Standard sprue taper, typically one-half inch per foot, leads to large base diameters in long sprues. For example, a 6-inch sprue with a 7/32-inch orifice diameter will have nearly a 0.5-inch diameter at the base. This large base diameter lengthens cooling and cycle times and also leads to regrind problems.

Hot sprue bushings provide one solution to this problem. Hot sprue bushings have a heated flow channel that transports material along its length in molten form, eliminating or shortening the molded cold sprue. Additionally, some molds rely on extension press nozzles that reach deep into the mold to reduce sprue length.

Runners

Unlike sprues, which deliver material depthwise through the center of the mold plates, runners typically transport material through channels machined into the parting line. Runner design influences part quality and molding efficiency. Overly thick runners can lengthen cycle time needlessly and increase costs associated with regrind. Conversely, thin runners can cause excessive filling pressures and related processing problems. The optimum runner design requires a balance between ease of filling, mold design feasibility, and runner volume.

Runner Cross Sections **Figure 7-20**

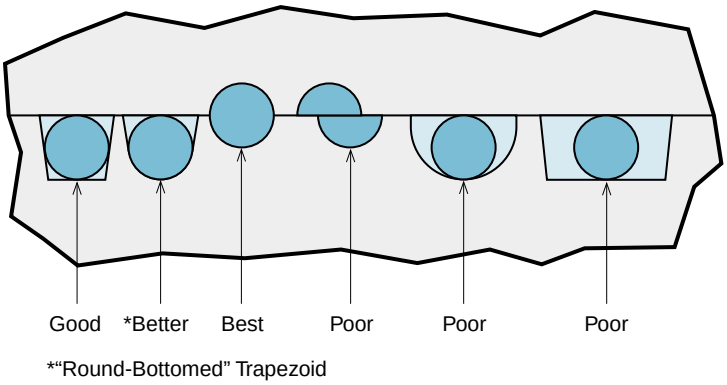

Full round runners provide the most efficient flow.

Material passing through the runner during mold filling forms a frozen wall layer as the mold steel draws heat from the melt. This layer restricts the flow channel and increases the pressure drop through the runner. Round cross-section runners minimize contact with the mold surface and generate the smallest percentage of frozen layer cross-sectional area. As runner designs deviate from round, they become less efficient (see figure 7-20). Round runners require machining in both halves of the mold, increasing the potential for mismatch and flow restriction. A good alternative, the **"round-bottomed" trapezoid**, requires machining in just one mold half. Essentially a round cross section with sides tapered by five degrees for ejection, this design is nearly as efficient as the full-round design.

The runner system often accounts for more than 40% of the pressure required to fill the mold. Because much of this pressure drop can be attributed to runner length, optimize the route to each gate to minimize runner length. For example, replace cornered paths with diagonals or reorient the cavity to shorten the runner.

Runner thickness has a direct effect on filling pressure, cycle time, packing, and runner volume. The optimum runner diameter depends on a variety of factors including part volume, part thickness, filling speed and pressure, runner length, and material viscosity.

- For sufficient packing, make runners at least as thick as the part nominal wall thickness.

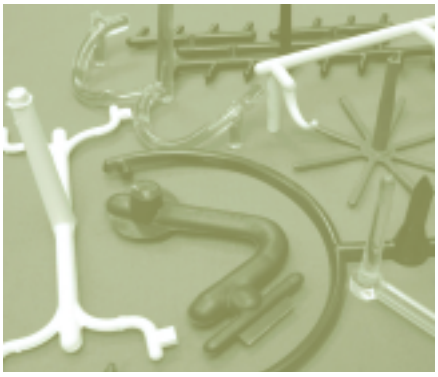

- Increase runner thickness for long runners and runners subjected to high volumetric flow rates.
- Amorphous resins typically require larger runners than semicrystalline resins.

Amorphous-Runner Diameters **Figure 7-21**

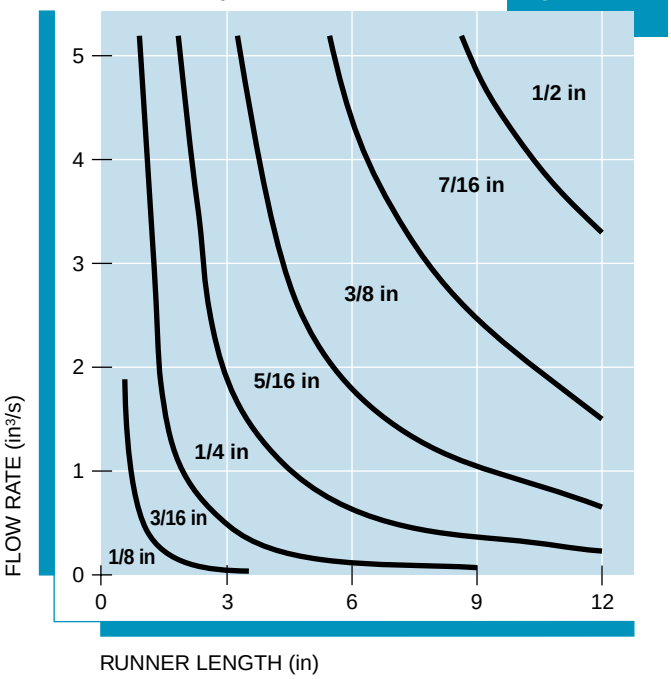

Runner-diameter guidelines based on volumetric flow rate and runner length.

Semicrystalline-Runner Diameters **Figure 7-22**

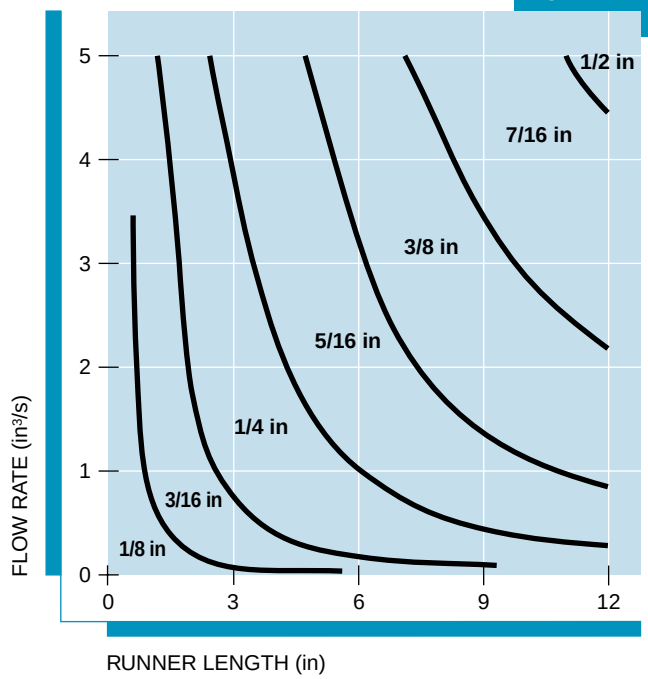

Runner-diameter guidelines based on volumetric flow rate and runner length.

Figures 7-21 and 7-22 provide a means for estimating **primary-runner diameters** based on volumetric flow rate and runner length. Calculate the flow rate by dividing the part volume of material passing through the runner segment by the anticipated filling time. For example a primary runner section feeding half of a 6 in^3 part, with an anticipated filling time of 3 seconds, would have a volumetric flow rate of 1 in^3/sec. Use figure 7-21 for amorphous Bayer resins, and figure 7-22 for semi-crystalline Bayer resins.

As an approximation, calculate **secondary-runner diameters** so that the total cross-sectional area of the secondary runners equals the cross-sectional area of the primary runner, and then round up to the nearest standard cutter size. For example, to calculate diameters for two secondary runners branching from a 0.25-inch primary runner, first solve for a runner diameter with half the cross-sectional area of the 0.25-inch primary runner:

$$r_{sec} = (r_{prim}{}^2 \div 2)^{1/2} \text{ so}$$
$$r_{sec} = (0.125^2 \div 2)^{1/2} \text{ and } d_{sec} = 0.177$$
$$\text{where } r = \text{radius and } d = \text{diameter}$$

Rounding up, the secondary runner diameter becomes 3/16 inch. The methods outlined above for calculating runner diameters usually generate reasonable, but not necessarily optimum, runner sizes. Consider computerized mold-filling analysis to achieve a higher level of optimization.

Family Mold **Figure 7-23**

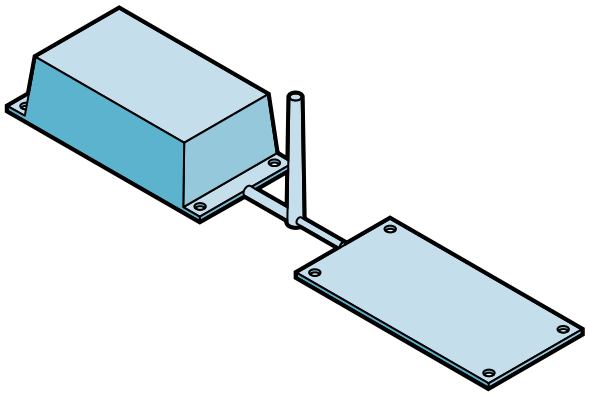

The runner diameter feeding the smaller part was reduced to balance filling.

Runners for Multicavity Molds

Runners for multicavity molds require special attention. Runners for **family molds**, molds producing different parts of an assembly in the same shot, should be designed so that all parts finish filling at the same time. This reduces over-packing and/or flash formation in the cavities that fill first, leading to less shrinkage variation and fewer part-quality problems. Consider computerized mold-filling analysis to adjust gate locations and/or runner section lengths and diameters to achieve balanced flow to each cavity (see figure 7-23). The same computer techniques balance flow within multi-gated parts. Molds producing multiples of the same part should also provide balanced flow to the ends of each cavity. **Naturally balanced runners** provide an equal flow distance from the press nozzle to the gate on each cavity. **Spoked-runner** designs (see figure 7-24) work well for tight clusters of small cavities. However they become less efficient as cavity spacing increases because of cavity number or size.

Figure 7-24 **Spoked Runners**

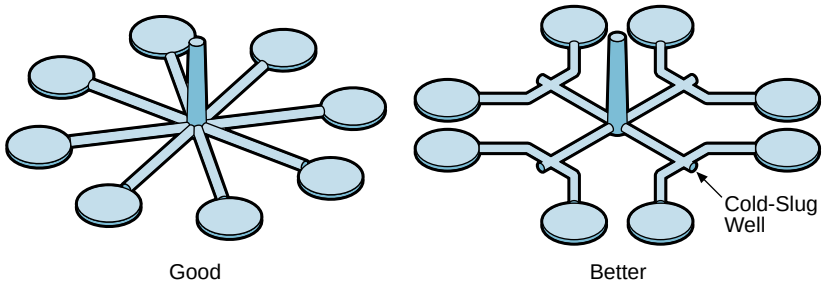

The spoked runner on the right provides a cold slug well at the end of each primary runner branch.

Naturally Balanced Runners **Figure 7-25**

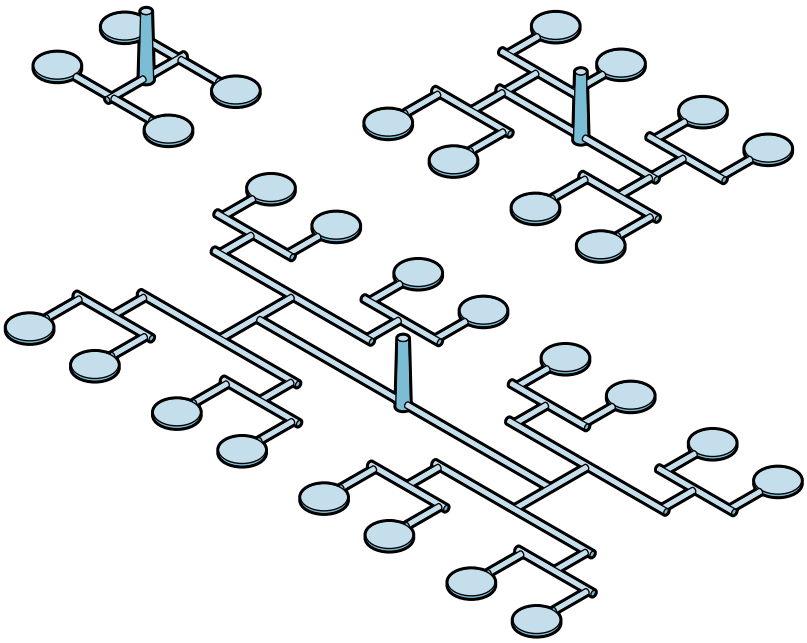

Naturally balanced runners for cavities in two rows.

Often, it makes more sense to orient cavities in rows rather than circles. Rows of cavities generally have branched runners consisting of a primary main feed channel and a network of secondary or tertiary runners to feed each cavity. To be naturally balanced, the flow path to each cavity must be of equal length and make the same number and type of turns and splits. This generally limits cavity number to an integer power of two — 2, 4, 8, 16, 32, etc. — as shown in figure 7-25. Generally, the runner diameter decreases after each split in response to the decreased number of cavities sharing that runner segment. Assuming a constant flow rate feeding the mold, the flow-front velocity in the cavity halves after each split. The molding press flow-rate performance may limit the number of cavities that can be simultaneously molded if the press cannot maintain an adequate flow-front velocity.

Figure 7-26 **Runner Balancing**

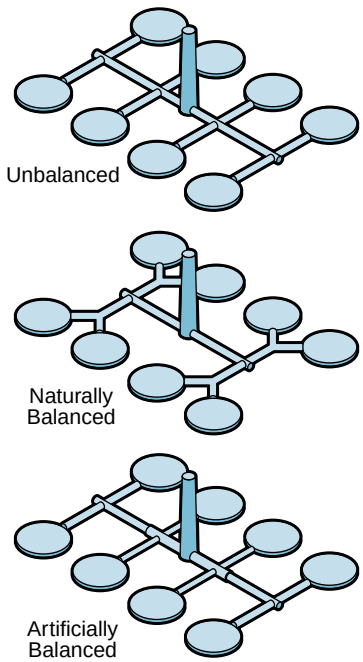

The artificially balanced runner achieves flow balance by adjusting runner diameters instead of by maintaining uniform runner length.

Artificially balanced runners provide balanced filling and can greatly reduce runner volume. Artificially balanced designs usually adjust runner-segment diameters to compensate for differences in runner flow length. For instance, in ladder runners, the most common artificially balanced runner design, a primary runner feeds two rows of cavities through equal-length secondary runners. The diameters of these secondary runners are made progressively smaller for the cavities with shortest runner flow distance (see figure 7-26). These designs require enough secondary runner length to flow balance using reasonable runner diameters.

- As a general rule, secondary runner length should be no less than 1/5 the flow distance from the inboard secondary/primary runner junction to the gates on the outboard cavities.

Runners for three-plate molds (see figures 7-2A through 7-2C) initially convey material along the runner-split parting line and then burrow perpendicularly through the middle plate to the cavity parting line. Tapered drops typically project from the main runner to pinpoint gates on the part surface.

To ease removal from the mold, these drops taper smaller toward the gate at a rate of about 0.5 inch per foot. Avoid long drops because the taper can lead to excessive thickness at the runner junction or flow restriction at the thin end. **Three-plate runners** usually require sucker pins or some other feature to hold the runner on the stripper plate until the drops clear the center plate during mold opening. Be sure these features do not restrict flow. See figure 7-27 for three-plate runner and gate-design guidelines.

Figure 7-27 **Three-Plate Runner**

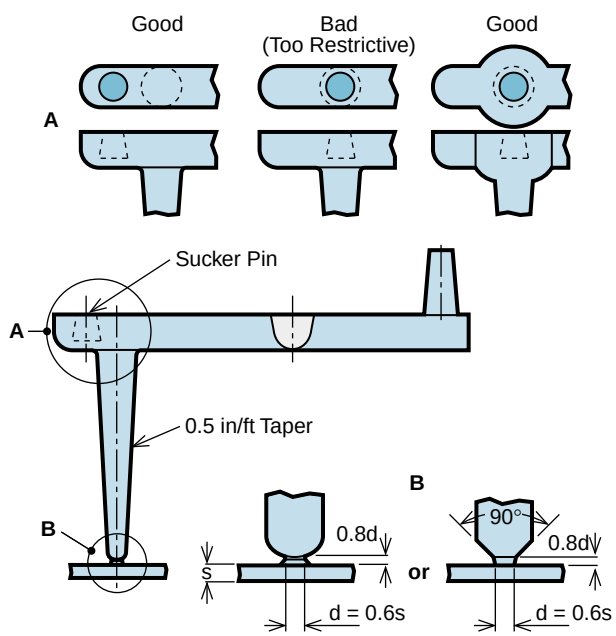

Three-plate runner system guidelines.

Figure 7-28 **Common Edge Gate**

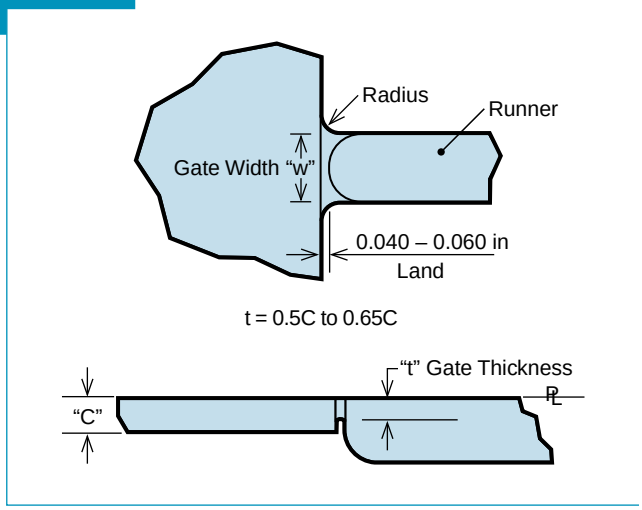

Common edge-gate guidelines.

Figure 7-29 **Variations of the Edge Gate**

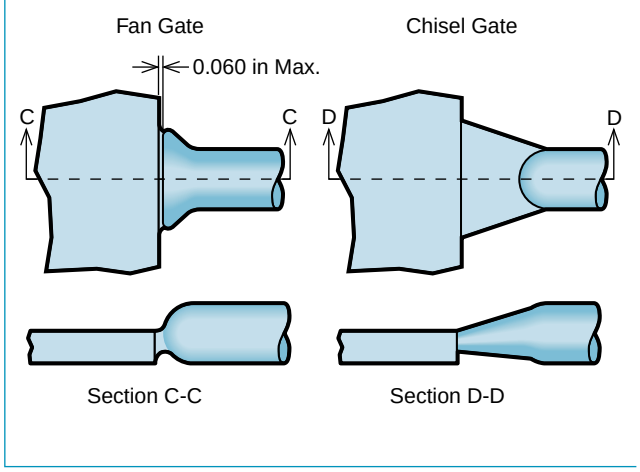

Fan gates and chisel gates can provide better cosmetics in some applications.

Gates

Except for special cases, such as sprue-gated systems which have no runner sections, gates connect the runner to the part. Gates perform two major functions, both of which require the thickness to be less than the runner and part wall. First, gates freeze-off and prevent pressurized material in the cavity from backing through the gate after the packing and holding phases of injection. Applied pressure from the press injection unit can stop earlier in the cycle, before the part or runner system solidifies, saving energy and press wear-and-tear. Secondly, gates provide a reduced-thickness area for easier separation of the part from the runner system.

A variety of gate designs feed directly into the parting line. The common **edge gate** (see figure 7-28) typically projects from the end of the runner and feeds the part via a rectangular gate opening. When designing edge gates, limit the land length, the distance from the end or edge of the runner to the part edge, to no more than 0.060 inch for Bayer thermoplastics. Edge gates generate less flow shear and consume less pressure than most self-degating designs. They are therefore preferred for shear-sensitive materials, high-viscosity materials, highly cosmetic applications, and large-volume parts.

Fan gates and **chisel gates**, variations of the edge gate, flare wider from the runner (see figure 7-29) to increase the gate width. Chisel gates can provide better packing and cosmetics than standard edge gates on some thick-walled parts. Like the standard edge gate, the land length for fan gates should not exceed 0.060 inch at the narrowest point. Chisel gates taper from the runner to the part edge with little or no straight land area. Edge gates can also extend to tabs (see figure 7-30) that are removed after molding or hidden in assembly. These **tab gates** allow quick removal of the gate without concern about gate appearance.

Figure 7-30 **Tab Gate**

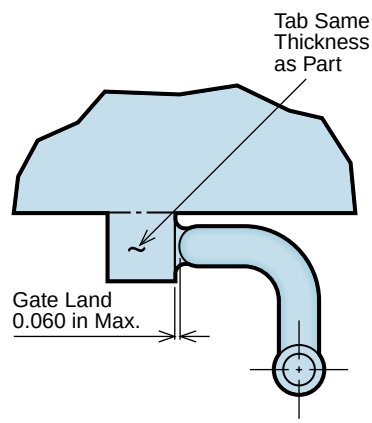

The gate tab can be hidden in the assembly or trimmed off after molding.

"Z" Runner **Figure 7-31**

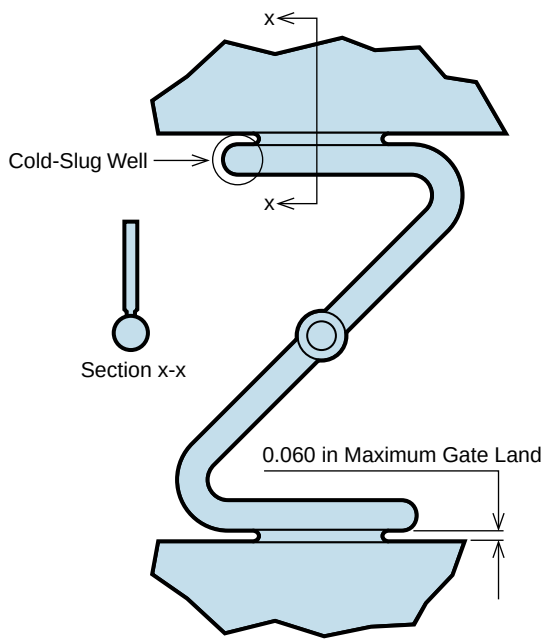

Edge gate from the side of a "Z" runner.

Gate Under the Edge **Figure 7-32**

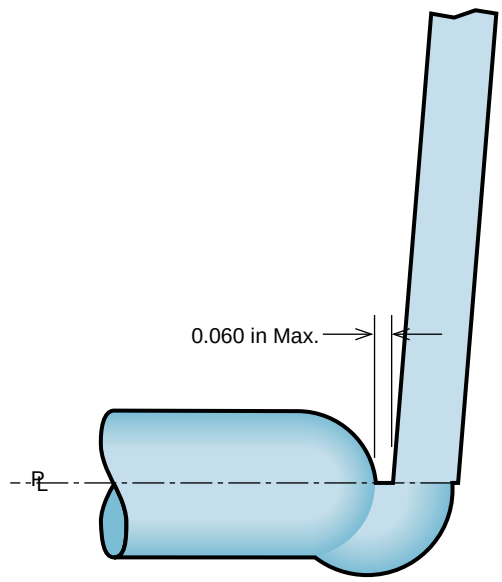

This gate can be trimmed without leaving a gate mark on the cosmetic part surface.

Edge gates may also extend from the side of a runner oriented parallel to the part edge (see figure 7-31). This design, coupled with a "Z"-style runner, tends to reduce gate blush by providing uniform flow along the width of the gate and a cold-slug well at the end of the runner. To hide the large gate vestige left by large edge gates, the gate can extend under the edge as shown in figure 7-32.

Because they extend under the mold parting surfaces, **tunnel gates** can reach surfaces or features that are not located on the parting line. The gates typically feed surfaces oriented perpendicular to the mold face. Depending upon their

Knockout-Pin Gate **Figure 7-33**

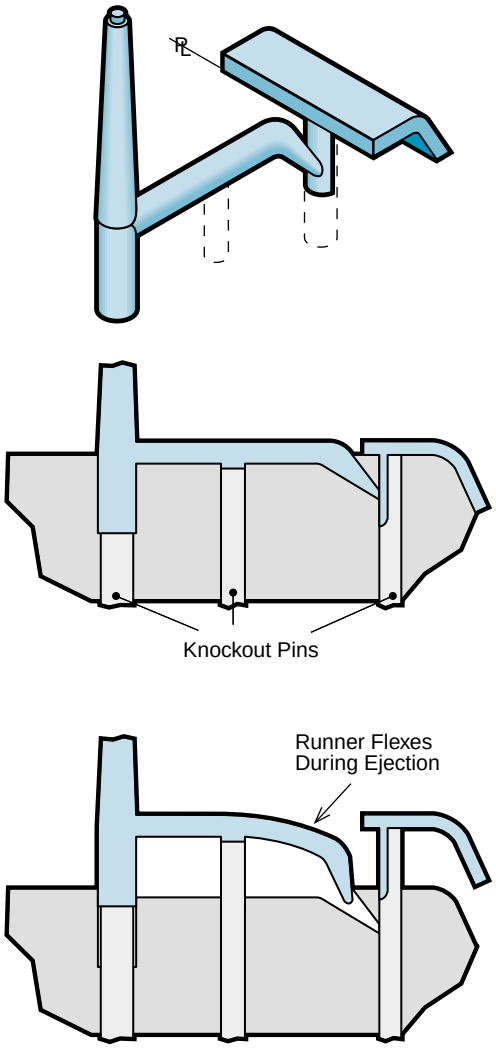

Tunnel gates that extend below the parting line on the ejector side of the mold degate during ejection.

Stationary-Side Tunnel Gate **Figure 7-34**

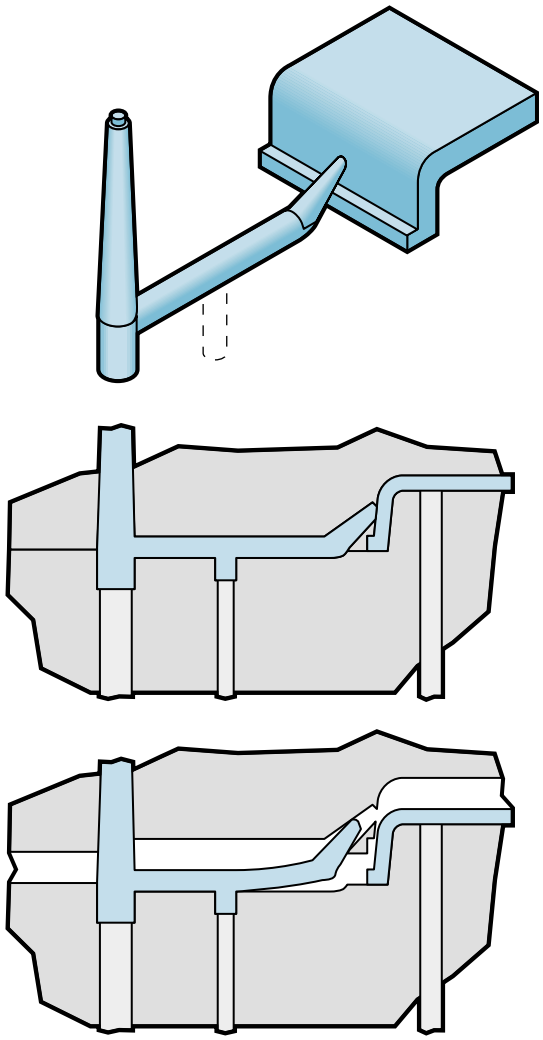

Tunnel gates into non-ejector side of the mold degate and separate from the part during mold opening.

design, they degate during ejection or mold opening (see figures 7-33 and 7-34). Tunnel gates that degate during mold opening often require a sucker pin or a feature similar to a sprue puller to hold the runner on the ejector half of the mold. The runner must flex for the gate to clear the undercut in the mold steel. The gate may break or lock in the mold if the runner is too stiff or if the ejector pin is too close to the gate. Normally, the ejector pin should be at least two runner diameters away from the base of the gate.

The orifice edge closest to the parting line must remain sharp to shear the gate cleanly. When molding abrasive materials such as those filled with glass or mineral, make the gate of hardened or specially treated mold steel to reduce wear. Also, consider fabricating the gate on an

Tunnel-Gate Configuration **Figure 7-35**

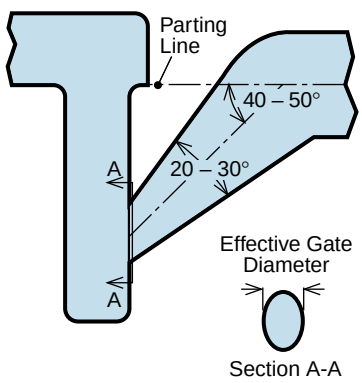

Standard tunnel-gate guidelines.

Modified Tunnel-Gate Configuration **Figure 7-36**

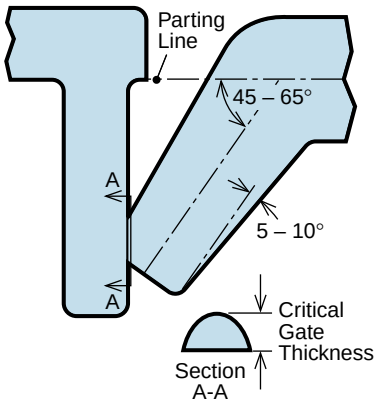

Modified tunnel-gate guidelines.

insert for easy replacement. The drop angle and conical angle must be large enough to facilitate easy ejection (see figure 7-35). Stiff materials, glass-filled grades for example, generally require drop angles and conical angles at the high side of the range shown in the figure. The **modified-tunnel gate** design (see figure 7-36) maintains a large flow diameter up to the gate shear-off point to reduce pressure loss and excessive shear heating.

Curved-tunnel gates permit gating into the underside of surfaces that are oriented parallel to the parting plane (see figure 7-37). Unlike mold fabrication for conventional tunnel gates, the curved, undercut shape of this design must be machined or EDM burned on the surface of a split gate insert. The curved gate must uncurl as the runner advances on guided posts during ejection.

Curved-Tunnel Gate **Figure 7-37**

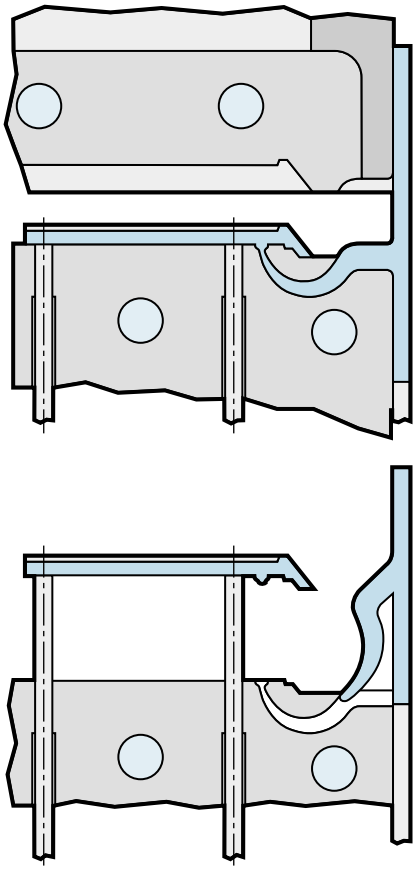

Curved-tunnel gates can reach past the finished edge to the underside of surfaces oriented parallel to the parting plane.

Curved-Tunnel-Gate Guidelines **Figure 7-38**

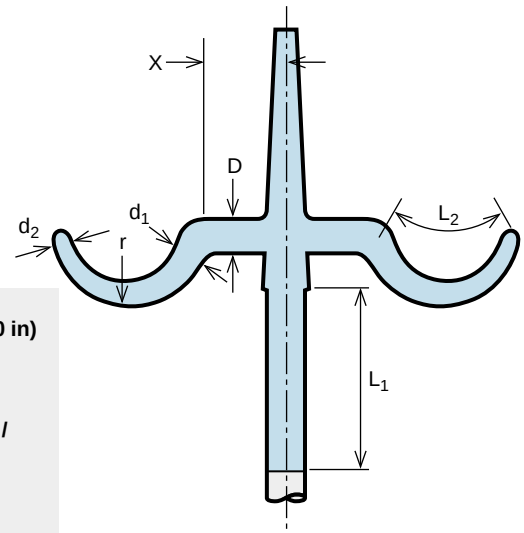

$\frac{X}{D} \geq \frac{2.5}{1}$ **or Min. 15 mm (0.600 in)**

D = Approx. 4 to 6 mm (0.160 to 0.235 in)

$d_1 \leq D$ (Normally 4 to 6 mm / 0.150 to 0.235 in)

r = 2.5 to 3 x d_1

d_1 to d_2 Equals a Taper of 3° to 5° Incl.

$L_1 \geq L_2$

Other Gate Designs

Pinpoint gates feed directly into part surfaces lying parallel to the mold parting plane. On the ends of three-plate runner drops, multiple pinpoint gates can help reduce flow length on large parts and allow gating into areas that are inaccessible from the part perimeter. For clean degating, the gate design must provide a positive break-off point (see figure 7-40) to minimize gate vestige. Set in recesses or hidden under labels, properly designed and maintained pinpoint gates seldom require trimming. Because gate size must also be kept small, typically less than a 0.080-inch

This gate design works well for unfilled materials that remain somewhat flexible at ejection temperature such as Makrolon PC, Lustran ABS, and amorphous blends such as Bayblend and Makroblend resins. Avoid this gate for filled materials, brittle materials, or materials with very high stiffness. See figures 7-38 and 7-39 for curved-tunnel gate design guidelines.

Figure 7-39 **Curved-Tunnel-Gate Design Guidelines**

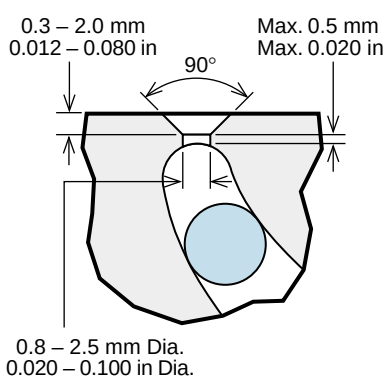

The curved tunnel gate needs a well-defined break-off point for clean degating.

Figure 7-40 **Pinpoint Gate**

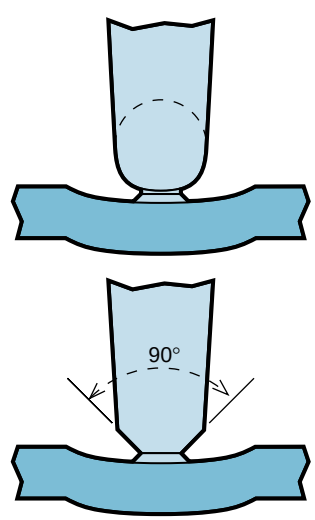

Both of these pinpoint gate designs provide a well-defined break-off point for clean degating. Design permitting, pinpoint gates should be placed in recessed gate wells to accommodate gate vestige.

Figure 7-41 **Filter-Bowl Gate**

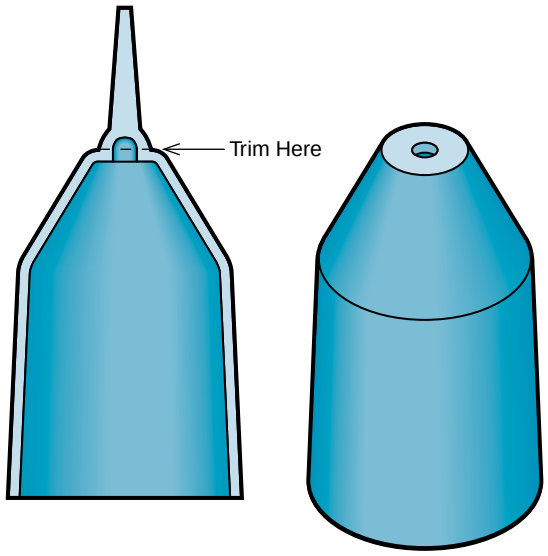

Typical filter-bowl gate avoids knitlines and provides even flow around the core.

Figure 7-42 **Diaphragm Gate**

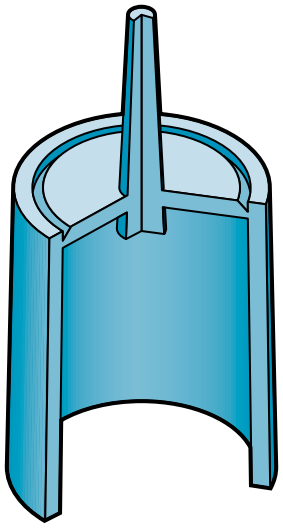

The diaphragm gate, which extends from the center disk to the inside of the cylinder, must be removed in a secondary step.

diameter, pinpoint gates may not provide sufficient packing for parts with thick wall sections.

Parts with holes in the center such as filter bowls, gears, and fans often use the **"filter-bowl"** gate design to provide symmetrical filling without knitlines. Typically, the gate extends directly from a sprue and feeds the cavity through a continuous gate into the edge of the hole (see figure 7-41). Degating involves trimming away the sprue and conical gate section flush with the outer surface. Another design variation, the **diaphragm gate**, feeds the inside edge of the hole from a circumferential edge gate extending from a center disk (see figure 7-42). Degating usually involves punching or drilling through the hole.

Gate Optimization

Factors affecting optimum **gate size** include part thickness, part volume, filling speed, material properties, and number of gates. Gate thickness controls packing ability. For proper packing, gates must remain open and free from freeze-off long enough to inject additional material during packing to compensate for shrinkage. In general:

- Unfilled materials require gates that are at least half as thick as the part.
- Use gates that are two-thirds the part thickness for highly cosmetic parts or parts that could exhibit read-through from features such as ribs and bosses.
- Glass- and/or mineral-filled nylons may pack sufficiently with gates as small as one-third the wall thickness.

The volumetric flow rate through the gate may dictate gate sizes larger than needed for packing alone. High flow rates in gates can generate excessive shear rates and shear heating, damaging the material and leading to a variety of molding problems.

Thin-walled parts — those with nominal wall thicknesses less than 1.5 mm — often require disproportionately large gates to accommodate the very high filling speeds needed for filling.

Gate diameters that are greater than 80% of the wall thickness are often required to prevent excessive gate shear. Ideally these gates should feed into thickened wells that ease flow from the gate into the part wall sections. Hot-runner valve gates are often required to achieve the required gate size without excessive gate vestige.

Volumetric flow rate and gate size control shear rate in the gate. Bulk shear rate in the gate is roughly proportional to the volumetric flow rate. Reducing the filling speed or flow rate by half reduces the shear rate by about half.

The effect of gate size on bulk shear rate depends on the gate geometry. For example, increasing the diameter of a round gate by 25% cuts the shear rate to half. For rectangular gates, doubling the width or increasing the thickness by about 40% reduces the shear rate by half.

Computer flow analysis can take into account the best filling-speed and injection-velocity profile for a given system when calculating the maximum shear rate encountered in the gate. A less accurate but simpler method is to calculate bulk shear rate using an estimated, uniform volumetric flow rate in the appropriate shear-rate formula:

$$\text{shear rate} = 4Q/\pi r^3 \text{ for round gates}$$
$$\text{shear rate} = 6Q/wt^2 \text{ for rectangular gates}$$

Where:
Q = flow rate (in^3/sec)
r = gate radius (in)
w = gate width (in)
t = gate thickness (in)
Note: See figure 7-28 for edge gate nomenclature.

To calculate flow rate, divide the volume passing through the gate by the estimated time to fill the cavity. For parts with multiple gates, this will mean assigning a portion of the part volume to each gate. Note that the rectangular-gate formula becomes more accurate when the gate width is much greater than the gate thickness.

Table 7-1 **Bulk Shear-Rate Limits**

Polymer Family	Shear Rate 1/s
Makrolon	40,000
Apec	40,000
Bayblend	40,000
Makroblend	40,000
Triax (PA/ABS)	50,000
Lustran ABS	40,000
Lustran SAN	40,000
Cadon	15,000
Centrex	40,000
Durethan	60,000
Durethan (reinf.)	40,000
Texin TPU	20,000
Texin PC/TPU	10,000
Desmopan	20,000

Note: Use 1/2 these values for flame-retardant grades and for critical transparent or cosmetic applications.

Materials differ in the maximum shear rate they can tolerate before problems occur. Table 7-1 lists the suggested shear-rate limits for a variety of Bayer resins. Shear-related problems seldom occur below these limits.

To minimize packing and gate shear problems:

- Set edge-gate thickness according to the packing rules and adjust the width to achieve an acceptable gate shear rate;
- Adjust the diameter of round gates, such as tunnel gates and pinpoint gates, based upon the packing rules or on the size needed to stay within the shear-rate limits of the material: whichever is larger; and
- Increase the quantity of gates if the calculated gate size is too large to degate cleanly.

Gate Position

Gate position can have a direct impact on part moldability, performance, appearance, and cost. The location of the gate determines the filling pattern and maximum material flow length. Ideally the gate would be positioned to balance filling and minimize flow length, typically near the center of the part or at strategic intervals for multi-gated parts. Often these best gate locations for filling are unacceptable for other reasons. For example, they might result in unsightly gate marks or weld lines in cosmetic areas, or increase mold construction costs. Cavity layout restrictions and mechanisms in the mold such as slides or lifters may also restrict gating to less-than-ideal locations. The best gate position is often a compromise between molding ease and efficiency, part performance and appearance, and mold design feasibility. The Design Engineering Services Group at Bayer Corporation has the experience and resources to assist you in choosing the optimum gate locations.

Gate position determines the filling pattern and resulting **flow orientation**. Plastics typically exhibit greater strength in the flow direction. Glass-fiber-filled plastics can often withstand more than twice the level of applied stress in the flow direction as in the cross-flow direction. Keep this in mind when choosing gate locations for parts subjected to mechanical loads. When feasible:

- Position gates to direct filling in the direction of applied stress and strain.

Flow orientation also affects part **shrinkage** in the mold. Shrinkage in unfilled plastics, which tend to shrink just a little more in the flow direction than in the cross-flow direction, is only slightly affected by flow orientation. Flow orientation has a large effect on fiber-filled plastics, which typically exhibit two or three times as much shrinkage in the cross-flow direction. As general rules:

- To minimize warpage and dimensional problems in glass-filled plastics, position the gates to provide uniform flow orientation along the part length.
- In parts with varying thickness, always try to gate into the thickest sections to avoid packing problems and sink.

Avoid thin-to-thick filling scenarios. When gating must feed a thinner wall, consider adding a thickened channel or flow leader from the gate to the thicker wall sections to facilitate packing and minimize shrinkage variations. The advancing flow front in parts with thick and thin wall section will often hesitate in the thin walls until the thicker walls have filled. This **flow hesitation** can lead to freeze-off and incomplete filling of the thin-wall section. Often, positioning the gate so that the thinnest walls are near the end of fill reduces the hesitation time, enabling the thin sections to fill. This is particularly helpful in thin-walled parts which are prone to flow-hesitation problems.

Gates typically generate elevated levels of **molded-in stress** in the part area near the gate. Also, gate removal often leaves scratches or notches that can act as stress concentrators that weaken the area. For these reasons:

- Avoid gating into or near areas that will be subject to high levels of applied stress such as screw bosses, snap arms or attachment points.

Figure 7-43 **Internally vs. Externally Heated Hot Runners**

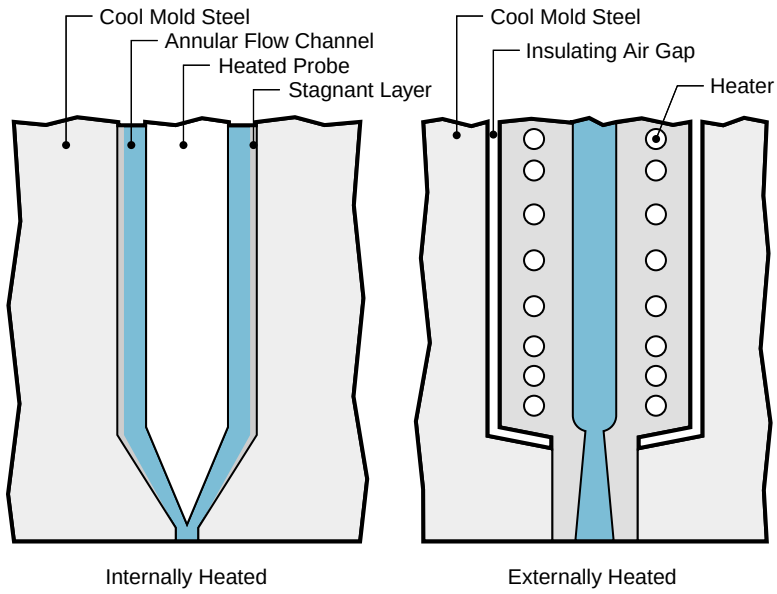

Unlike externally heated systems, internally heated hot-runner systems form a cool layer of stagnant material along the outer surface of the flow channel.

The flow length resulting from the chosen gate locations must not exceed the flow capabilities of the material. Check the calculated **flow length**, usually the shortest distance from the gate to the last area to fill, against the published spiral flow data for the material. Consider computerized mold-filling analysis if the flow length is marginal or if the wall thickness varies or is outside the range of published spiral flow data. **Flow leaders**, thickened areas extending from the gate toward the last areas to fill, can aid filling without thickening the entire part. See Chapter 2 for more information on flow leaders.

The pressure imbalance from uneven flow around long, unsupported cores can bend or shift the cores within the mold. This **core shift** increases the wall thickness on the side nearest the gate and reduces the wall thickness opposite the gate. In severe cases, this can lead to non-fill opposite the gate and/or mold-opening or ejection problems as the core springs back after filling and pinches the thicker wall. Such parts require symmetric gating around the core or wall-thickness adjustments to balance flow around the core.

HOT-RUNNER SYSTEMS

Hot-runner systems use heated or insulated channels to transport molten resin through the mold, delivering it directly into the mold cavity or to a cold-runner system. Used to eliminate or reduce cold-runner size and runner regrind, hot runners add to mold construction and maintenance costs, and can complicate processing and mold startup procedures. Properly designed hot runners efficiently distribute flow to widely dispersed gates with little pressure loss or melt temperature change. They also facilitate gating in areas inaccessible from parting-line runners and gates. This section discusses hot-runner design issues.

Hot-Runner Designs

Commercially available in a wide array of standard designs, hot-runner systems range from simple, hot sprue bushings costing a few hundred dollars to large, valve-gated, sequential-filling designs costing tens of thousands of dollars. Most hot runners consist of a center drop that receives melt from the press nozzle, a manifold to distribute flow parallel to the mold face, and drops that move material perpendicularly through the mold plate to the mold cavity or cold runner. Zones of electrical-resistant heaters maintain uniform melt temperature throughout the system via separate temperature controllers and strategically placed thermocouples. The many wires feeding the heaters and thermocouples are usually guided through channels or conduits in the mold to prevent shorting or pinching of the wires between mold plates. Pinched thermocouple wires can cause erroneous temperature measurements and lead to excessive heater temperatures and degraded material. In addition to resistance heaters, some designs use high-conductivity metals and/or heat pipes to distribute heat.

Hot-runner systems are available in both externally and internally heated configurations (see figure 7-43). Externally heated designs maintain the temperature through heat supplied from outside the molten flow channel. These systems rely on heaters or thermal conductors attached to the outside of the hot-runner components or encapsulated, embedded, or inserted under the metal surface. Internally heated designs typically maintain melt temperature by way of torpedo heaters or heated probes placed inside the flow channel.

Although both types of hot runners have been used successfully with Bayer engineering thermoplastics, internally heated designs have an inherent disadvantage in some applications. Internally heated flow channels tend to form a stagnant layer of material on the cooler outer surface of the flow channels. Over time, this material can degrade and produce black specks, brown streaks, and other cosmetic problems in molded parts. The same problems can occur in all types of hot-runner systems if the flow channels are not streamlined to prevent material hang-up at trouble spots such as corner plugs and the transitions between components.

- Avoid internally heated designs when molding transparent or heat-sensitive materials, or when surface cosmetics are critical.

- Streamline flow channels to eliminate areas in the hot runner where material could hang-up and degrade.

Hot-Runner Gates

Molten materials exit the hot-runner system through gates at the ends of the heated drops. In conventional hot-runner gates, the material in the hot-drop tip must solidify just enough to prevent material leakage or drool through the gate between injection cycles. Conversely, if it solidifies too much and forms a large cold slug, it may leave blemishes on the next molded part. To achieve the optimum balance, one of the most challenging aspects of hot-runner design, you must control heat transfer into and out of the area where the hot-drop tips contact the mold.

Insulated Tips **Figure 7-44**

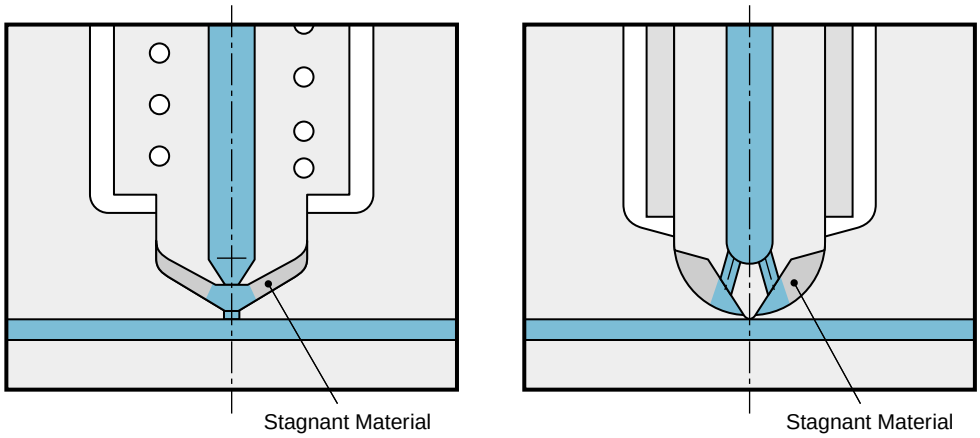

Some hot-tip gate designs rely on an insulating layer of the molding material to control heat transfer at the tip. These designs are not suitable for all applications.

Many factors determine the rate of heat transfer, including the molding material, the tip orifice size and shape, the proximity of cooling channels, melt temperature, and cycle time. Many designs minimize the drop-to-mold contact area or insulate the tip to reduce heat loss to the mold. In some designs, the first material shot through the hot-runner system fills a gap at the tip of the drop and forms an insulating layer of plastic (see figure 7-44). This plastic layer remains in place until the tip is removed for service. Because the insulating layer can degrade in time and release burnt material into the melt stream, avoid this design for transparent parts and any part that cannot tolerate occasional streaks or black specks. Contact your hot-runner manufacturer for guidance in selecting the best tip design for your material and application.

Hot-runner gates come in a variety of styles. **Mini-sprue gates** (see figure 7-45) are one of the most popular designs for high-viscosity, amorphous engineering plastics. Because they isolate the heated portion of the drop further

Figure 7-45 **Free-Flow Gates**

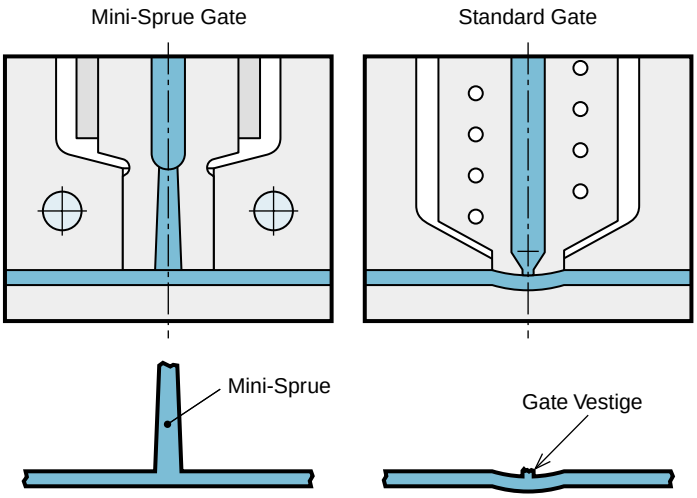

Free-flowing gate designs provide the large orifice sizes and low shear rates required by many high-viscosity amorphous resins.

Reduced-Vestige Gate **Figure 7-46**

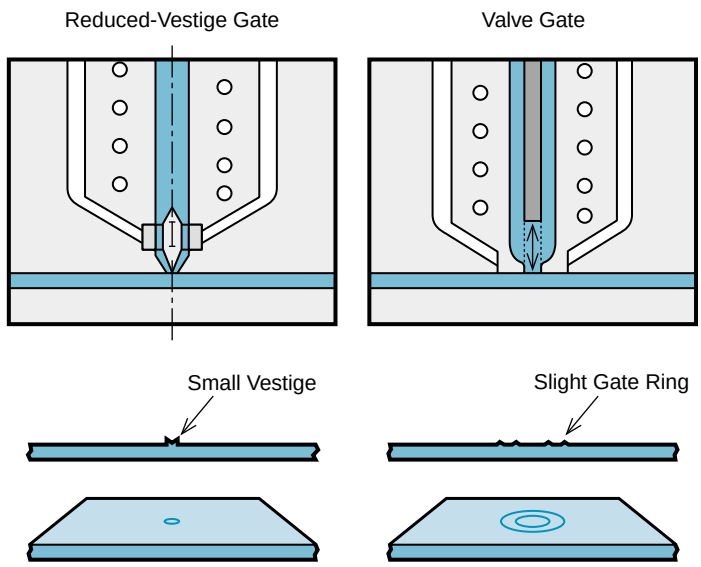

A stationary probe in the reduced-vestige gate helps the gate break cleanly. In the closed position, the valve pin in the valve gate leaves a ring similar to an ejector-pin mark.

from the mold surface, mini-sprue gates usually do not develop the heat build up and dull gate blemish problems associated with some designs. Mini-sprue gates form a short sprue on the runner or part.

Standard free-flowing gates typically leave a short gate vestige, which may require trimming. Some anti-vestige designs rely on annular flow around unheated probes in the tip to promote cleaner gate separation with less vestige (see figure 7-46).

- Amorphous engineering resins — including PC, PC blends, ABS, and SAN — tend to experience fewer problems with free-flowing gate types.
- Crystalline resins — including PA 6, PA 66 and PBT — are generally more tolerant of restrictive, reduced-vestige gate designs, but require careful temperature control to prevent freeze-off or drooling.
- Direct mold cooling to the gate area, both on the gate side and side opposite the gate, to prevent heat buildup and variations in gloss on the part surface.

Valve Gates

Some hot-runner designs feature mechanical shutoffs to prevent leakage or drool. Rather than relying on delicate control of temperature and heat transfer to seal the gate between injection cycles, **valve-gated hot runners** use hydraulically or pneumatically driven valves to close the gate orifice mechanically. These valves provide positive gate shutoff, offer freedom from drool, and accommodate very large gates. Valves designed to shutoff flush with the mold surface produce no gate vestige and leave only a ring witness mark similar to an ejector-pin mark. Additionally, mechanical shutoff designs offer the option to open gates sequentially to maintain a continuous flow front over long distances without knitlines. Drawbacks of valve-gated systems include higher cost, frequent maintenance, and increased mold complexity.

THERMAL EXPANSION AND ISOLATION

Because of the high operating temperatures of hot-runner systems, typically between 400 and 600°F for Bayer resins, you must address both thermal expansion and thermal isolation within the mold. Usually, hot runners are fixed at the manifold centering ring and at the end of each hot drop. The design must accommodate the substantial growth of the system between these fixed points as the components heat and expand during startup. Systems with short drops often have a sliding fit between the drop and the manifold to allow for expansion. Designs with long drops may simply allow the drops to flex.

The length of the hot drops also grows significantly during startup. Some designs only create a positive seal at the tip of the drop when at the intended operating temperature. Plastic injected before the drop reaches this temperature could flow into the gap between the hot-runner drop and the mold plate, creating a messy problem. Hot-runner manufacturers calculate the expansion and make expansion provisions based on the hot-runner configuration and anticipated operating temperatures.

To avoid excessive heat loss to the mold, minimize metal-to-metal contact between the heated hot-runner components and the mold. When feasible, use materials with low thermal conductivity at the contact points. In addition to an insulating air gap around the hot-runner system, some designs surround the heated components with insulating material and/or infrared reflectors.

Hot-Runner-Channel Pressure Gradients **Figure 7-47**

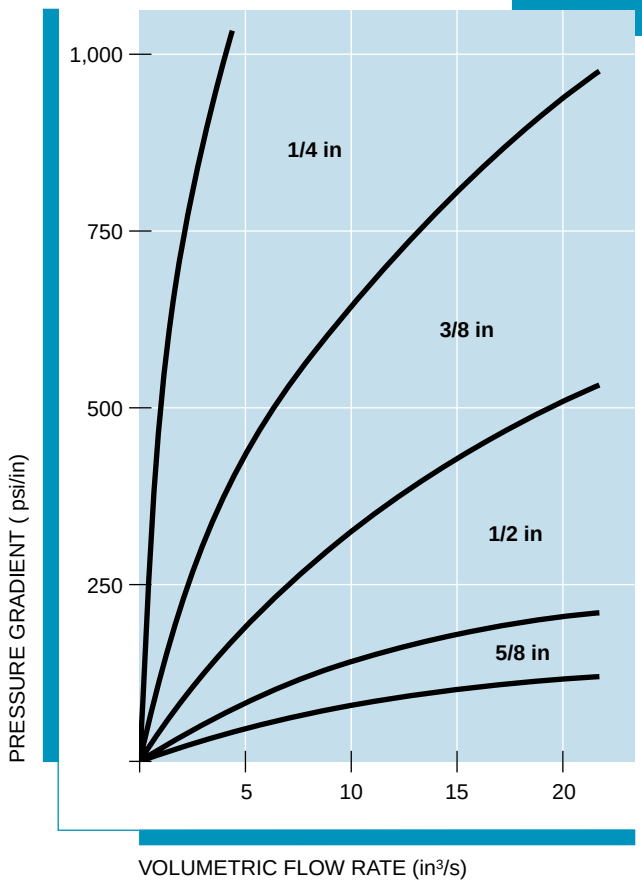

Use this graph to calculate the pressure drop per inch of heated hot-runner channel.

Flow Channel Size

As in cold-runner systems, flow channels and gates require proper sizing for optimum performance. Generally hot-runner gate sizes should follow the size guidelines for cold-runner gates outlined in the gate-optimization section of this chapter. With regrind or runner waste not a concern, hot-runner channels can be considerably larger than cold runners and consequently consume less pressure.

Figure 7-47 shows the approximate correlation between pressure gradient and flow rate at various diameters for a range of Bayer engineering resins. To estimate the pressure drop through a given hot-runner channel section, first calculate the flow rate in that section by dividing the volume of material, in cubic inches, fed by that section by the number of seconds required to fill the mold. Then read from the graph the pressure gradient corresponding to the flow rate and channel size. To estimate the pressure drop in psi, multiply the channel length in inches by the pressure gradient. The pressure-gradient range for a given flow rate and channel diameter correlates to the range of material viscosities. Use the lower pressure-gradient values for low-viscosity materials such as Durethan PA 6 and higher values for high-viscosity grades of Makrolon polycarbonate.

Stagnant Flow **Figure 7-48**

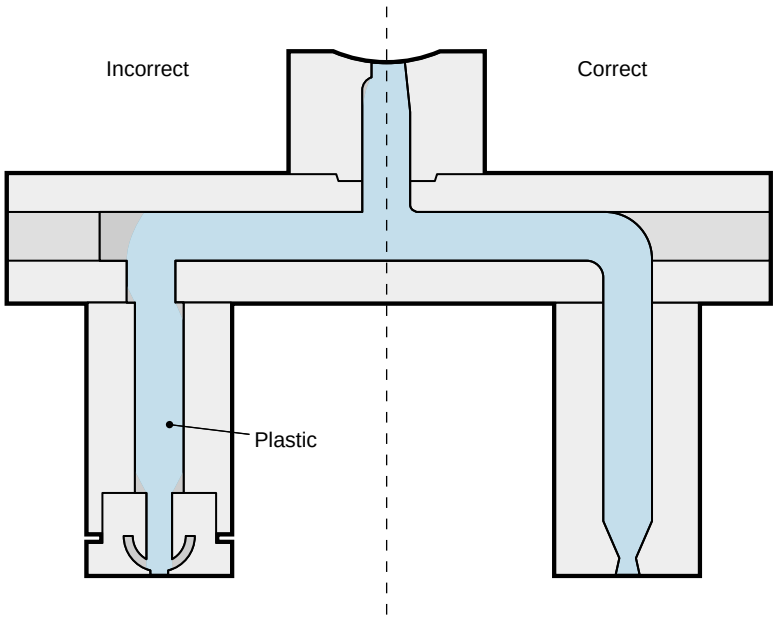

Improper flow-channel design and construction can result in stagnant-flow areas where material can degrade.

Most hot-runner systems are naturally balanced and provide an equal flow distance to each hot-runner gate. As the hot-runner channels branch off to form secondary or tertiary channels, the channel diameters can become smaller to accommodate the corresponding drop in material throughput. Unbalanced configurations — for example a row of drops fed from a common manifold channel — need careful adjustment of the hot-drop, flow-channel diameters to balance flow. Typically, smaller diameters are assigned to the channels or hot drops feeding the shorter flow path. The choice of channel diameters is often limited to the standard sizes offered by the hot-runner manufacturer. Most hot-runner manufacturers will calculate the required diameters for you. If not, consider computer flow simulation.

The process of drilling flow channels can produce dead spaces where material can stagnate and degrade (see figure 7-48). Plug and streamline the flow in these areas to prevent black specks, burnt streaks, and material discoloration. Dead spaces can also occur at gaps between poorly fitting components and at unblended transitions in the flow channel.

MOLD COOLING

In thermoplastic molding, the mold performs three basic functions: forming molten material into the product shape, removing heat for solidification, and ejecting the solid part. Of the three, heat removal usually takes the longest time and has the greatest direct effect on cycle time. Despite this, mold cooling-channel design often occurs as an afterthought in the mold-design process; after the feed system, mold mechanism, and ejection system designs are already designed. Consequently, many cooling designs must accommodate available space and machining convenience rather than the thermodynamic needs of the product and mold. This section discusses mold cooling, a topic to consider early in the mold-design process.

Good mold-cooling design maintains the required mold temperature, provides uniform cooling, and achieves short molding cycles. Optimizing mold cooling promotes improved part quality and cost savings. Improper cooling can introduce elevated levels of thermal and shrinkage stresses resulting from cooling-rate variations throughout the part. Differences in cooling rate cause areas to shrink and solidify at different rates and by different amounts. In parts made of semicrystalline resins such as PA 6 or PBT, the cooling rate affects the degree of crystallization and shrinkage. Variations in shrinkage within the part can lead to warpage, distortion, and dimensional problems.

Cooling Time vs. Wall Thickness **Figure 7-49**

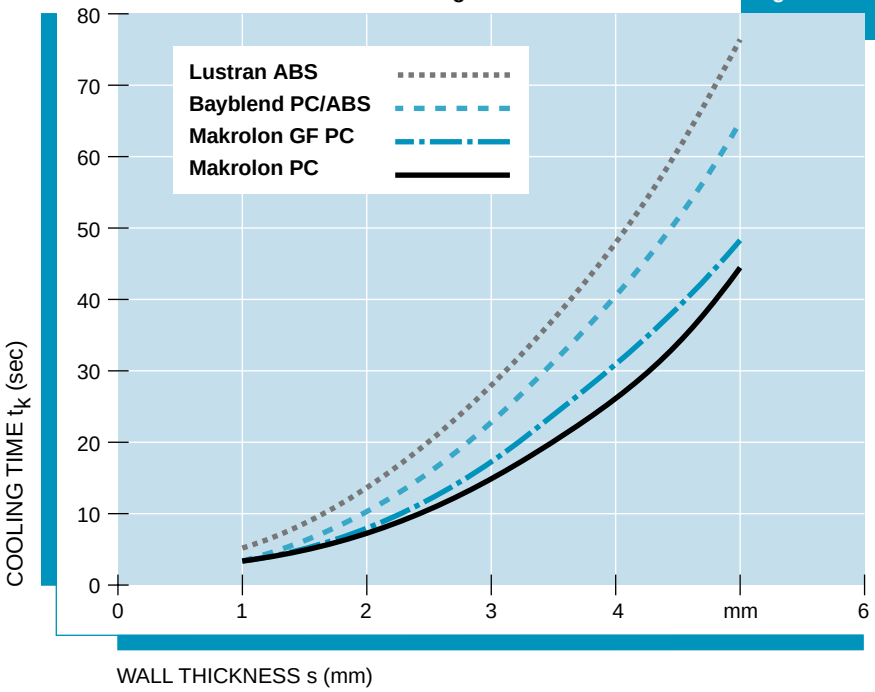

Mold-surface temperature can affect the surface appearance of many parts. Hotter mold-surface temperatures lower the viscosity of the outer resin layer and enhance replication of the fine microtexture on the molding surface. This can lead to reduced gloss at higher mold-surface temperatures. In glass-fiber-reinforced materials, higher mold-surface temperatures encourage formation of a resin-rich surface skin. This skin covers the fibers, reducing their silvery appearance on the part surface. Uneven cooling causes variations in mold-surface temperature that can lead to non-uniform part-surface appearance.

Before heat from the melt can be removed from the mold, it must first conduct through the layers of plastic thickness to reach the mold surface. Material thermal conductivity and part wall thickness determine the rate of heat transfer. Generally good thermal insulators, plastics conduct heat much more slowly than typical mold materials. Cooling time increases as a function of part thickness squared; doubling wall thickness quadruples cooling time.

- Core out thick sections or provide extra cooling in thick areas to minimize the effect on cycle time.

Figure 7-49 plots cooling time (to freeze) versus wall thickness for a variety of Bayer thermoplastics assuming typical mold-cooling conditions.

Once at the cavity wall, heat must travel through the mold material to the surface of the cooling channels. The thermal conductivity of the mold material and the spacing of the cooling channels

determine heat transfer in this area. Table 7-2 shows thermal conductivity for a variety of mold materials.

- Avoid low-conductivity mold materials, such as stainless steel, when fast cycles and efficient cooling are important.

Cooling-Channel Placement

Cooling-channel placement determines cooling efficiency and uniformity. Positioning the channels too close to the cavity surface can cause cold spots and uneven cooling. If they are too far away, cooling becomes more uniform but less efficient.

- Place cooling-channel centerlines approximately 2.5 cooling-channel diameters away from the mold-cavity surface.

The spacing between adjacent cooling channels also affects cooling uniformity.

- As a general rule of thumb, use center-to-center spacing of no more than three cooling-channel diameters (see figure 7-50).

Table 7-2 **Thermal Conductivity of Various Mold Materials at 68°F**

Mold Material	Thermal Conductivity	
	$\frac{BTU \cdot ft}{hr \cdot ft^2 \cdot °F}$	$\frac{W}{M°C}$
420 Stainless	14.4	25.0
H13 Steel	16.3	28.3
P20 Steel	20.0	34.5
S7 Steel	21.0	36.4
C-17200 BeCu	68.0	118.0
QC7 Aluminum	80.0	138.8
C17510 BeCu (High Conductivity)	135.0	234.2

Figure 7-50 **Cooling-Line Spacing**

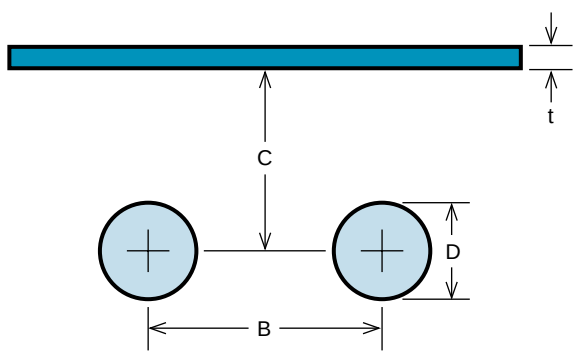

B = 3D Maximum
C = 2.5D
D = 3/16 in – 5/16 in for t ≤ 1/16 in
D = 5/16 in – 7/16 in for t ≤ 1/8 in
D = 7/16 in – 5/8 in for t ≤ 1/4 in

Cooling-line spacing guidelines.

Figure 7-51 **Bubbler**

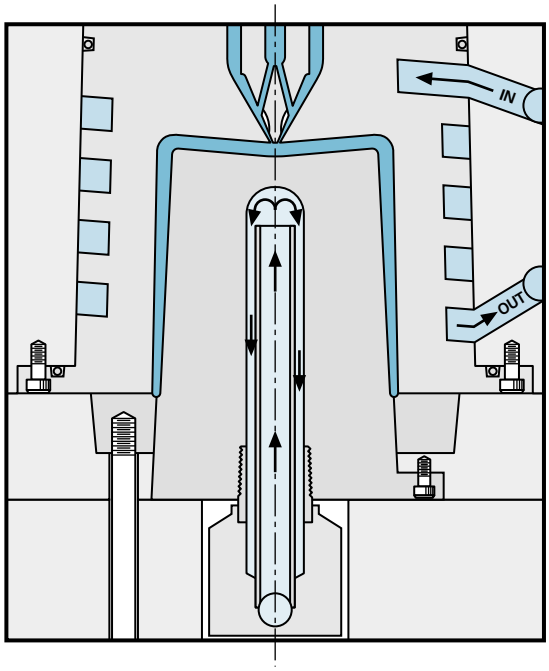

In bubblers, coolant flows up through a tube and then cascades down the outside of the tube. Baffles perform a similar function by splitting the channel with a blade. Coolant flows up one side of the blade and then down the other side.

Figure 7-52 **Spiral Cooling Channels**

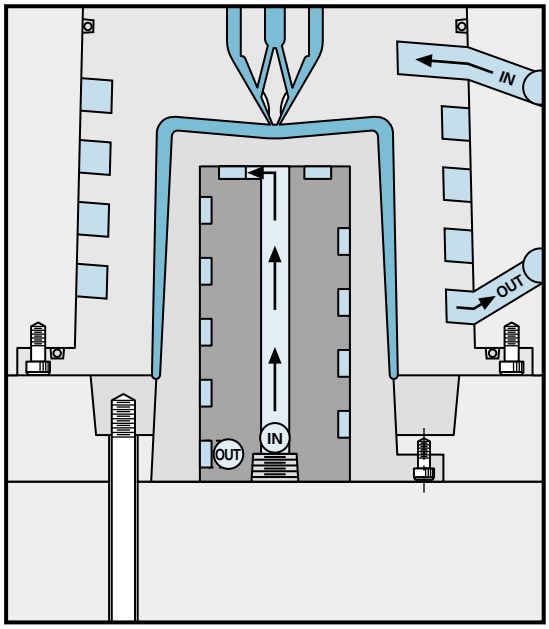

Round core and cavity cooled via spiral cooling channels.

Because of size and/or machining constraints, standard round cooling channels may not be feasible for some deeply-cored part geometries. Parts tend to shrink tightly onto deep cores, separating from the cavity wall. This separation transfers more heat to the core.

- Consider using baffles (see figure 7-10) and bubblers (see figure 7-51) to remove heat from deep cores;
- Adjust the bubbler tube or baffle length for optimum cooling. If they are too long, flow can become restricted. If too short, coolant flow may stagnate at the ends of the hole; and
- Consider using spiral channels cut into inserts for large cores (see figure 7-52).

When designing cooling channels, pay special attention to the sections of the mold forming inside corners in the part design to prevent possible part distortion problems. Corners place a higher thermal load on this mold area than on the mold area in contact with the outside

Heat Buildup in Corner **Figure 7-53**

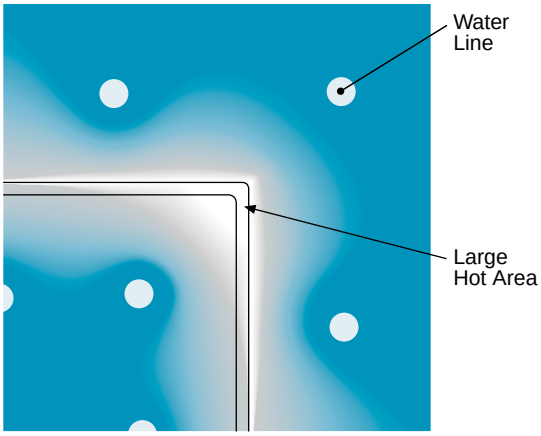

Illustration of heat distribution through the cross section of a corner showing heat buildup in the corner of the core.

Improved Corner Cooling **Figure 7-54**

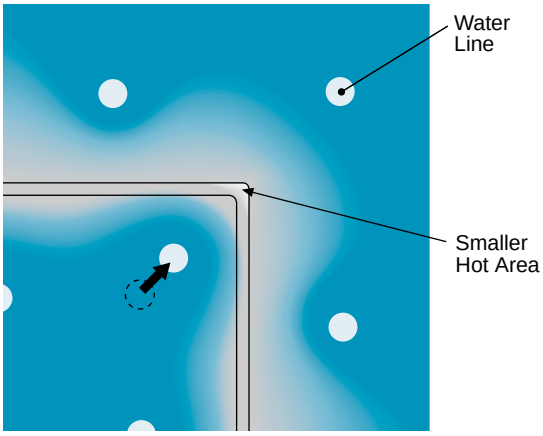

Illustration of heat distribution through a corner cross section showing improved cooling with cooling line moved closer to the inside corner.

Corner Cooling **Figure 7-55**

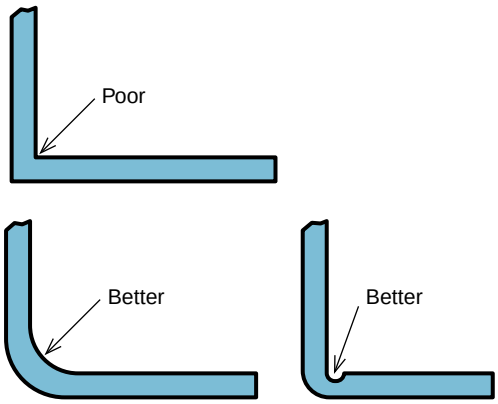

Rounding the corner or removing material from the corner lessens the heat buildup in the corner steel.

corner (see figure 7-53). The resulting heat buildup slows cooling and shifts the molten core toward the inside. As the shifted molten core shrinks and solidifies, it pulls disproportionately on the inside corner, leading to corner warpage and a reduction in corner angle. This phenomenon causes the classic hourglass distortion in box-shaped parts. There are several possible ways to correct heat buildup on inside corners including:

- Moving a cooling line closer to the hot corner area (see figure 7-54) to more effectively remove heat;
- Rounding the corner or using corner coring to remove material from the corner and lessen heat buildup (see figure 7-55);

- Directing cooling into corners with bubblers or baffles (see figure 7-56);
- Using high-conductivity metal inserts or heat pipes to remove excess heat and reduce corner distortion; and
- Placing ejector pins away from the inside corners. The air-gap clearance surrounding ejector pins in corners acts as an insulator and hinders heat flow out of the corner.

Cooling-Line Configuration

Cooling lines can be arranged in series or parallel configurations (see figure 7-57). Cooling lines in **parallel circuits** share the coolant delivered by the mold temperature controller. Assuming equal pressure drop per line, the coolant flow-rate-per-line approximately equals the total flow rate delivered by the temperature controller divided by the number of parallel lines connected to it. For example, a 10 gallon-per-minute control unit would deliver about 1.25 gallons per minute to each of eight equal parallel cooling lines.

Slight differences in pressure drop between parallel lines can cause large differences in coolant flow rate and potential cooling problems. **Series circuits** avoid this problem by maintaining a uniform coolant flow rate throughout the circuit. On the other hand, a large rise in coolant temperature in long series circuits can lead to less efficient

Figure 7-56 **Ejectors in Corners**

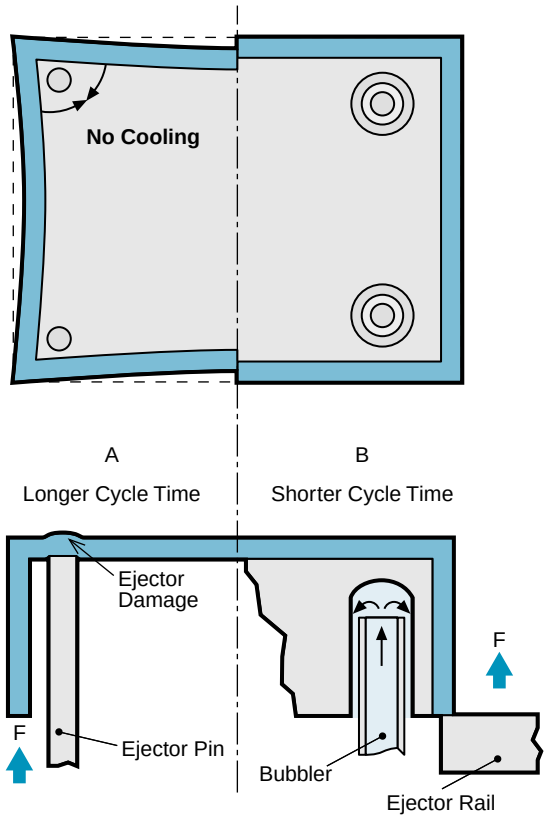

Ejector pins in corners act as thermal insulators that can aggravate heat buildup and corner warpage. It is better to direct cooling to the corners and provide ejection via ejector sleeves or rails.

Figure 7-57 **Cooling Circuits**

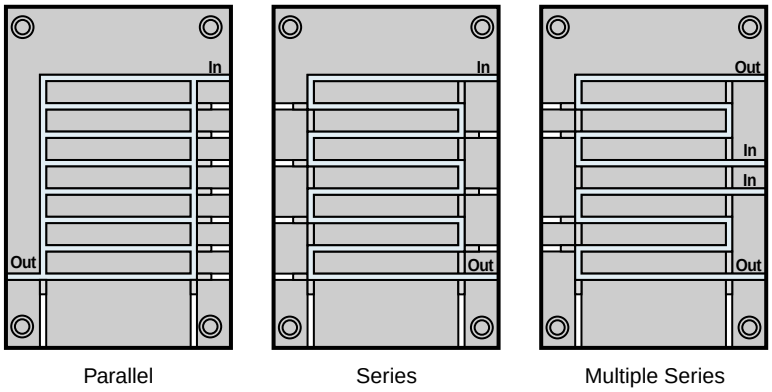

Multiple series cooling circuits can often provide better cooling than either parallel or series circuits.

cooling at the ends of the circuits. As a compromise, consider splitting large cooling circuits into multiple smaller series circuits of equal pressure drop. Use flow-control meters to balance flow through circuits with unequal lengths and/or restrictions. In series circuits, direct cooling to areas requiring the most cooling first: typically, thick sections, hot cores, or the mold center.

Coolant Flow Rate

For efficient heat transfer from the mold to the coolant, design the cooling system to achieve turbulent flow, that is, a **Reynolds number** significantly higher than the turbulence onset value of about 2,500. At a Reynolds number of 10,000, the normal design target value, water coolant transfers heat an order of magnitude faster than laminar flow (see figure 7-58). You can estimate Reynolds number using the following formula.

$$R_e = \frac{3{,}160Q}{D\eta}$$

Q = gallons per minute
D = flow channel diameter
η = kinematic viscosity (centistoles)
η_{water} = 1.3 @ 50°F
= 0.7 @ 100°F
= 0.4 @ 150°F
= 0.3 @ 200°F

Solving for Q assuming 150°F water, the formula shows that a standard 7/16-inch-diameter, cooling channel requires 0.5 gallons per minute to achieve a Reynolds number of 10,000.

Reynolds Number **Figure 7-58**

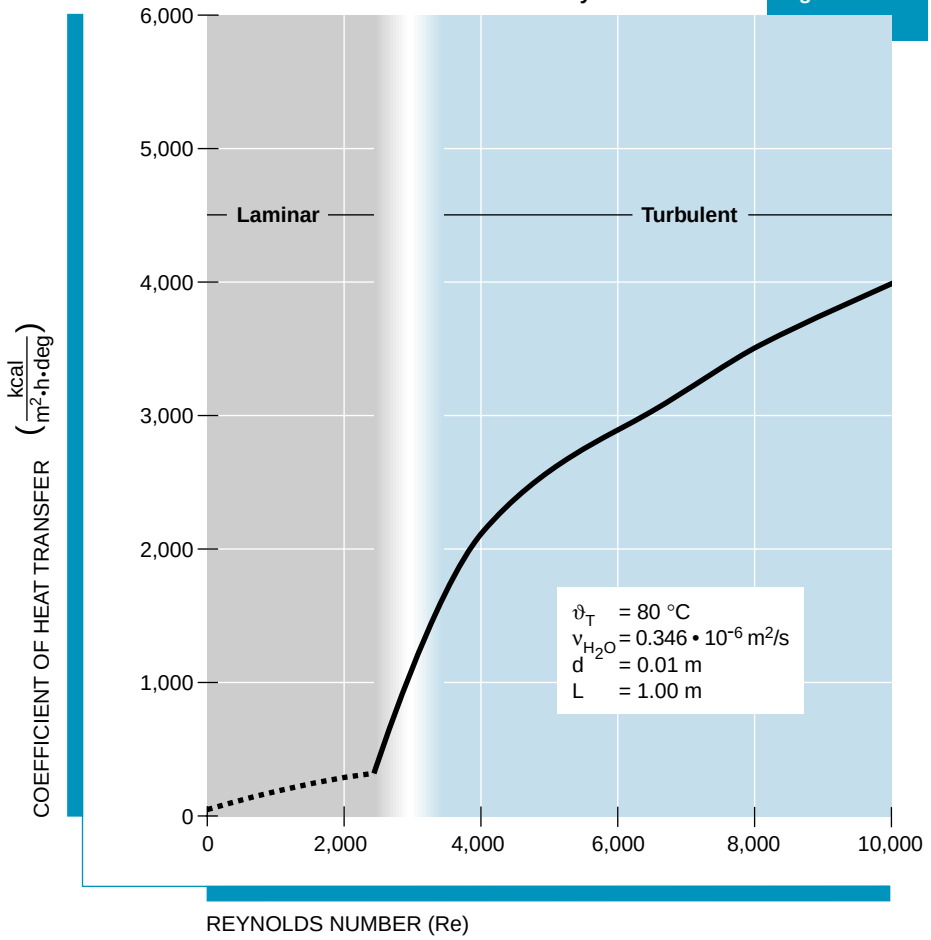

Coefficient of heat transfer as a function of Reynolds number for water.

$$Q = \frac{D\eta R}{3{,}160} = \frac{0.438 \cdot 0.4 \cdot 10{,}000}{3{,}160}$$
$$= 0.5 \text{ gal/min}$$

Multiply this value by the number of parallel circuits to estimate the flow-rate requirement for the mold-temperature control unit. Flow rate has a greater influence on cooling efficiency than mold temperature. Be sure the cooling system and mold-temperature control unit can deliver the cooling rate needed.

Do not underestimate the cooling requirements of thin-walled parts. Decreasing wall thickness by half reduces minimum cooling time to one-fourth. To realize the full cycle-time-reduction potential, the cooling system must remove heat at four times the rate. Other cooling considerations to address:

- Avoid flow restricting, quick disconnects, and other obstructions that increase pressure drop and reduce coolant flow rate;

- Use flow-control meters to check for obstructions and to adjust the coolant flow rate through the cooling circuits; and

- Provide enough coolant flow to limit the coolant temperature rise in the circuits to no more than 4°F.

MOLD SHRINKAGE

Typically, thermoplastics shrink significantly as they cool and solidify during the molding process. Mold designers make the mold cavity larger than the desired final part size to compensate for shrinkage. Mold shrinkage data published by the resin supplier for the specific material can be used to estimate the amount of compensation needed. Published mold shrinkage data, based on simple part geometries and standard molding conditions, is calculated using the following formula:

$$\text{shrinkage} = \frac{(\text{mold dimension} - \text{part size})}{\text{mold dimension}}$$

Mold shrinkage, listed as length-per-unit-length values or as percentages, assumes room-temperature measurements.

Many processing and design factors determine the amount of shrinkage for a given application. Use published shrinkage information with caution as it is tested under laboratory conditions that may not reflect your specific part geometry or processing environment. Consider the following when addressing shrinkage:

- Cooling rate and mold temperature can affect the level of crystallinity and shrinkage in semicrystalline resins;

- Thick-wall sections cool more slowly and tend to shrink more than thin-wall sections (see figure 7-59);

- Fiber-filled materials typically exhibit much less shrinkage in the flow direction;

- Mixed orientation typically leads to shrinkage ranging between published flow and cross-flow shrinkage values (see figure 7-60); and

- Shrinkage varies with the level of packing.

Shrinkage vs. Wall Thickness **Figure 7-59**

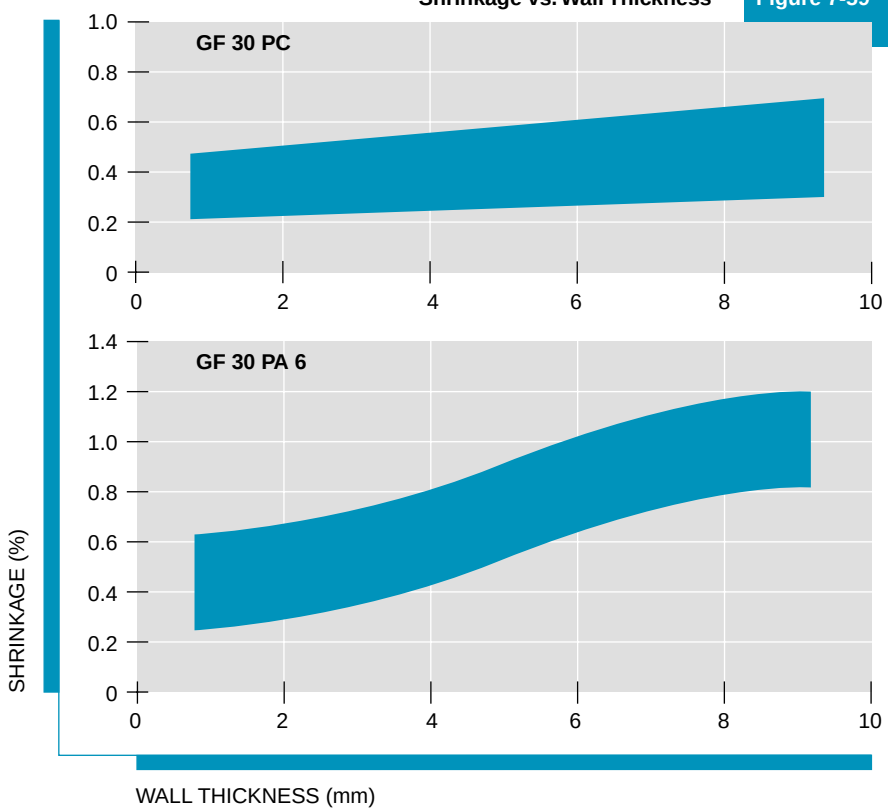

Examples of shrinkage as a function of wall thickness.

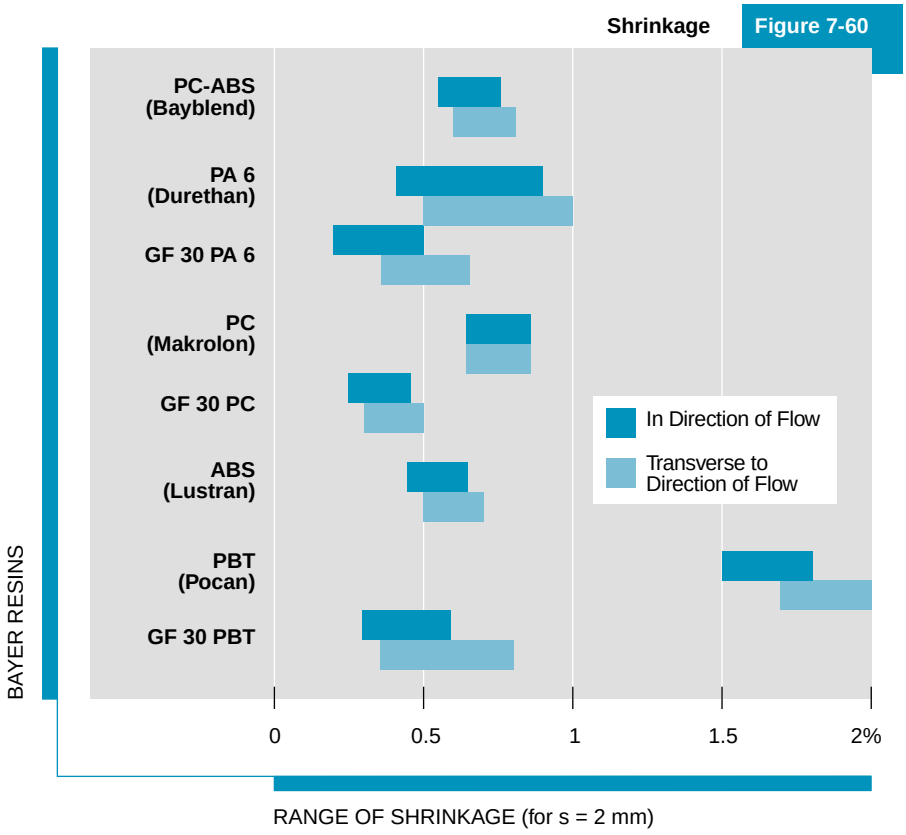

Shrinkage ranges for various Bayer resins at a 2 mm wall thickness.

Packing forces additional material into the mold to compensate for volume reduction, lowering shrinkage. Gate size, part thickness, and gate position can limit the level of packing that can be achieved through processing adjustments. Large gate thickness and high mold temperature delay gate freeze-off and promote higher levels of packing. Packing typically decreases and shrinkage increases further from the gate, particularly in distant thick-wall sections.

The mold constrains the part and prevents significant dimensional change until after part ejection. The type and duration of this constraint can affect net shrinkage between part features. For example, the shrinkage percentage between holes in a molded plate will tend to be less than between the unconstrained edges of the plate. Long cycle times constrain the part in the mold longer and reduce initial shrinkage, but can induce stresses that lead to additional shrinkage over time as the stresses relax.

As explained above, many factors can affect the level of shrinkage. You can usually obtain the most accurate shrinkage values for new molds by calculating the actual shrinkage in existing molds producing similar parts sampled in the same material. Ideally, the gating, flow orientation, mold cooling, and processing should be similar to that expected for the new mold. Prototype molds can also be a good source of shrinkage values, but may not replicate production conditions.

Published shrinkage data represents the typical range of shrinkage based on laboratory conditions. Applying this data to a specific part and mold requires a combination of engineering judgment and educated guess. Tend toward the lower end of the range for parts thinner than 0.100 inch, and for highly constrained features such as the distance between holes. Anticipate flow orientation in glass-filled parts and apply the flow and cross-flow shrinkage values appropriately. Areas of random orientation will tend to shrink at a level midway between the flow and cross-flow values. Computerized shrinkage analysis takes some of the guesswork out of shrinkage prediction and is worth considering if the resin has undergone the required testing.Consider designing critical features and dimensions “steel safe” to simplify modifications to correct for errors in shrinkage prediction.

MOLD METALS

Mold designers consider a variety of factors when selecting the mold metal including, machining ease, weldability, abrasion resistance, hardness, corrosion resistance, and durability. Metals can range from the soft, low-melt-temperature alloys used in inexpensive, cast-metal, prototype molds to the porous metal used in vent inserts. Metals are chosen based not only on the cost, manufacturing, and performance requirements of the mold or component, but also on the experience and comfort level of the mold design and construction shop.

Aluminum, long a popular choice for prototype molds, is gaining acceptance in moderate-run production molds. Improved aluminum alloys, such as QC-7, exhibit greater strength and hardness than standard aircraft-grade aluminum, and sufficient durability for some production molds. Hard coatings can raise the surface hardness of aluminum molds to more than 50 Rockwell C (HRC) for improved wear resistance. Steel inserts and mechanical components are usually used in high wear areas within the aluminum mold to extend mold life. Aluminum offers easier machining and faster cycle times than conventional mold steels at the expense of wear resistance and mold durability.

Most high production injection molds designed for engineering plastics are fabricated from high-quality tool steel. Mold bases are usually made of P-20 prehardened to 30 – 35 HRC and are often plated to resist corrosion. Specifications for high-quality molds, especially for medical parts, often specify 420 stainless steel to eliminate corrosion concerns.

Cavity and cores steels vary based on the production requirements, machining complexity, mold size, mechanical needs, and the abrasive or corrosive nature of the molding resin. P-20 steel (30-36 HRC) provides a good mix of properties for most molds running non-abrasive materials such as unfilled PC or ABS. Prehardened 420 stainless (30-35 HRC) can also be used when corrosion resistance is needed. For longer mold life and increased durability, many medical molders select 420 stainless hardened to 50-52 HRC for their molds running unfilled resin grades. This highly polishable stainless steel resists corrosion and staining but provides less efficient cooling than most other mold steels.

Most abrasive glass or mineral-filled resins require mold steels with hardness ratings of at least 54 HRC. Air hardened steels, such as H-13, machine more easily than prehardened steels and can be hardened to 54 HRC for use with most abrasive glass or mineral-filled resins. Air hardened S-7 sees similar applications as H-13, but can be hardened to 54-56 HRC for higher-wear areas. Air hardened D-2 (54-56 HRC) provides superior abrasion and is often used in high wear areas such as runner and gate inserts for abrasive materials. Small inserts and components that see steel-to-steel wear can be manufactured from steels that can achieve hardness levels greater than 56 HRC such as O-1, O-6, A-2, and A-10. Table 7-3 lists some of the common steels used in mold making. Steel manufacturers also offer a variety of specialty grades with properties tailored to mold making. The heat-treating process used to achieve the high hardness values of some of the mold steels, can result in cracks in large cores, particularly if the cross-sectional thickness is not consistent. Consider prehardened mold steels for these applications.

Table 7-3 **Mold Steels**

Mold Components	Common Steels
Cavity Blocks and Inserts	P20, H13, 57, L6, A2 A6, P2, P6, 420SS
Cavity Plates	P20, H13, S7, 420SS
Clamping Plates	P20, H13, S7
Core Blocks and Inserts	P20, H13, 57, L6, A2 A6, P2, P6, 420SS
Ejector (Knockout) Pins	Nitrided H13
Ejector Plates	P20, H13, S7
Guide Pins and Bushings	O1, A2, P6
Leader Pins	Nitrided H13
Retainers	P20, H13, S7
Slides	Nitrided P20, O1, O2, O6, A2, A6, P6
Sprue Bushings	O1, O2, L6, A2, A6, S7, P6

As a general rule, the Rockwell hardness of mold components that slide against each other, such as bypass cores, should differ by at least 2 HRC to reduce galling and damage to both components. The less expensive or more easily replaced component should have the lower hardness.

Inserts made of BeCU or high-conductivity alloys can reduce heat buildup in difficult-to-cool areas of the mold. The metals with the best thermal conductivity tend to be the softest. To protect the soft metals from abrasion and deformation, they are often inserted into harder steel cores or components.

SURFACE TREATMENTS

To varying degrees, plastics replicate the finish and texture of the molding surface. Fine scratches and roughness on the molding surface will tend to create a non-glossy part surface and potential part-ejection problems. Polish molding-surface roughness in the direction of ejection to ease part release and remove surface defects. Most thermoplastics eject more easily from polished mold surfaces. Thermoplastic urethane resins, exceptions to this rule, release more easily from mold surfaces that have been blasted with sand or glass beads, or vapor honed to an SPI D2 (formerly SPI #5) finish.

Polishing with 240 – 320 grit paper can produce a uniform brushed finish. High-gloss finishes typically require a sequence of polishing steps using progressively finer silicon carbide stones ranging from 220 to 900 grit. The surface is then polished and buffed with increasingly finer diamond pastes ending with a 3-micron paste. The level of gloss attainable on the molding surface generally increases with greater steel hardness. A surface hardness of at least 30 HRC is usually required for moderately fine gloss finishes. High-gloss finishes typically require hardness in excess of 50 HRC. The steel type and quality, heat treatment, and polishing technique all affect the attainable gloss level.

Molding-surface treatments can produce a variety of surface finishes and **textures** in the molded part. Textures can enhance the overall part aesthetics and hide surface blemishes such as minor sink and gate blush. Relatively flat surfaces can be blasted with sand or glass beads to produce a low-luster matte finish. The spark-erosion process for manufacturing mold cavities in an EDM machine can also produce textured surfaces ranging from very fine to coarse. Textures produced this way tend to have rounded peaks that resist scratching and marring better than comparable photoetched textures. In general, coarser textures resist scratching better than fine textures.

Photoetching uses an acid etching process to create a wide array of surfaces ranging from leather finishes to wood grain. The process creates detailed textures by photographically applying an acid-resistant masking material to the mold surface and then etching the exposed areas with acid. To avoid variations in texture, make sure that the molding surfaces for matching textured parts are manufactured from the same mold steel and have undergone the same heat treatment process. Texture uniformity and gloss level can be adjusted to some extent through multiple etching steps or by blasting the surface with glass beads.

Different molding resins and processing conditions can change the surface appearance of parts molded from the same mold surface texture. Low-viscosity resins such as Durethan PA 6 and Pocan PBT can replicate the fine microtexture and sharp edges of photoetched textures. The molded surface appears duller than that produced by higher-viscosity plastics such as Makrolon PC or Lustran ABS which tend to round off the microtexture. Higher melt temperatures and pressures increase the matte level by enhancing the ability of the resin to replicate the fine features of the mold texture.

Mold components are coated or plated for a variety of reasons. Flash chrome and thin deposits of electroless nickel less than 0.001-inch thick offer protection against rust and corrosion. Thicker deposits of hard chrome, usually more than 0.002-inch thick, prolong the life of molds running glass-filled or mineral-filled resins. Hard chrome and electroless nickel plating can also build thickness to correct dimensional problems or refurbish worn areas. Mold release coatings such as PTFE-modified hard chrome or electroless nickel have performed well in molds with ejection problems such as medical parts with insufficient draft.

MOLD COST AND QUALITY

The true cost of a mold includes not only the costs of design and construction, but also mold-maintenance costs and the mold-related costs associated with scrap, cycle time, part quality problems, and press down time. In the long run, the least-expensive mold option seldom produces the most economical, high-quality parts. Extra engineering and expense up front can improve molding efficiency and increase the number of good parts the mold can produce. When developing the mold specifications, consider the following.

- Hardened steel molds last longer and require less maintenance and rework than soft steel molds.
- Money spent on enhanced mold cooling can pay back many times over in reduced cycle time and improved part quality.
- Hardened mold interlocks and alignment features ensure proper mold alignment and prevent wear or damage due to misalignment.
- Spare parts for items prone to wear or breakage are usually cheaper to manufacture during mold construction than after the mold is in production. Spare parts reduce costly down time.
- In the long run, it is usually more economical to adjust the mold steel to produce parts in the middle of the tolerance range at optimum processing conditions than to adjust dimensions by processing within a narrow processing window at less-than-optimum conditions.

When obtaining quotations for new mold construction, make sure that every mold maker works from the specific set of mold specifications. Also consult processing, mold-maintenance, and inspection personnel at the molding facility for mold-design input based on experience with similar molds.

The conditions of your use and application of our products, technical assistance and information (whether verbal, written or by way of production evaluations), including any suggested formulations and recommendations, are beyond our control. Therefore, it is imperative that you test our products, technical assistance, and information to determine to your own satisfaction whether they are suitable for your intended uses and applications. This application-specific analysis at least must include testing to determine suitability from a technical as well as health, safety, and environmental standpoints. Such testing has not necessarily been done by Bayer Corporation. All information is given without warranty or guarantee. It is expressly understood and agreed that customer assumes and hereby expressly releases Bayer Corporation from all liability, in tort, contract or otherwise, incurred in connection with the use of our products, technical assistance and information. Any statement or recommendation not contained herein is unauthorized and shall not bind Bayer Corporation. Nothing herein shall be construed as a recommendation to use any product in conflict with patents covering any material or its use. No license is implied or in fact granted under the claims of any patent.

INDEX

A

Acme threads, 37
acrylic paints, 105
adhesive bonding, 91
adhesives, 91
agency approvals, 9
air-curing paints, 106
air entrapment, 22
air-poppet valves, 130
alignment, 92
alignment features, 92
alignment fingers, 93
aluminum, 162
American National (Unified) thread, 37
amorphous plastics, 106
annealing, 101
apparent modulus, 55
appearance, 8
artificially balanced runners, 139
ashing, 104
automated assembly, 88

B

baffles, 156
balance filling, 22
balanced flow, 137
band sawing, 99
beam bending, 64
bearings, 42
bending, 61
bending moment, 61
black specks, 149, 153
blanking, 100
blind holes, 132
blow molding, 12
bolts, 84
bonding, 88
bosses, 27, 132
break point, 52
brown streaks, 149
brushing, 108
bubblers, 156
buffing, 103
bulk shear rate, 146
burnt streaks, 153
buttress threads, 37
bypass steel, 125

C

cable-guide hardware, 84
cam pins, 125
cams, 35
cavities, 124
cavity, 121
cavity assemblies, 125
cavity units, 125
chamfers, 92
chemical exposure, 8
chisel gates, 140
circular sawing, 100
clamp slots, 124
clicker dies, 100
coefficient of friction, 53
coefficients of linear
thermal expansion (CLTE), 80
collapsible cores, 35, 127
compressive properties, 53
compressive stress, 61
consolidation, 14, 83
coolant flow rate, 159
cooling-vent design, 36
cooling channel placement, 155
cooling rate, 160
cooling time, 154
core pulls, 35
core shift, 130, 148
cores, 33, 121
corner radius, 31
corner warpage, 157
corners, 21
corrugations, 67
crazing, 56, 107
creep, 47, 54, 73
creep and recovery data, 54
creep modulus, 55, 59, 74
creep properties, 54
critical thickness, 20
crowns, 67
crystallinity, 160
crystallization, 154
curved-tunnel gates, 143
cutting oils, 98
cyclic loading, 78

D

decals, 118
depth-to-diameter ratio, 33
design formulas, 58
design process, 7
diaphragm gates, 100, 145
die cutting, 100
dimensional tolerances, 9
dipping, 108
distortion, 154
draft, 25, 32
draw polishing, 129
drilled holes, 98
drilling, 97
drills, 97
drops, 149
dry sanding, 103
dry spray, 107
dynamic friction, 53

E

edge gate, 140, 141
edge-stiffening, 113
ejector assembly, 124
ejector blades, 129
ejector plate, 124
ejector-pin vents, 132
elastic limit, 52
elastic modulus, 58
electric discharge machine, 119
electrical performance, 8
electroless nickel, 164

electroless process, 112
electroplating, 111
electrostatic systems, 107
elongation at yield, 52
EMI/RFI shielding, 115
end mills, 101
energy directors, 89
engineering strain, 60
epoxies, 105
equivalent thickness, 71
equivalent-thickness factor (ETF), 70
external threads, 37
extension press nozzles, 134
externally heated, 149
extrusion, 11
extrusion blow molding, 13

F

fan gates, 140
fasteners, 84
fatigue, 56, 78
fatigue curves, 56
fatigue data, 78
fatigue endurance, 78
fiber orientation, 50, 58
filing, 103
fillet radius, 79
film-insert molding, 110
“filter-bowl” gate, 145
finger tabs, 88
first-surface film decorating, 111
flash, 103, 104
flash chrome, 164
flexural modulus, 53, 58
flow channels, 152
flow control meters, 159, 160
flow hesitation, 25, 148
flow leaders, 22, 148
flow length, 20, 147, 148
flow orientation, 147
flow restrictors, 22
free-flowing gates, 151

G

gas-assist molding, 25, 69
gas burn, 132
gate marks, 103, 104
gate optimization, 145
gate position, 147
gate size, 145, 152
gate vestige, 144, 151
gates, 104, 140
gears, 42
geometric tolerancing, 41
glass-bead blasting, 119
gloss differences, 21
glossy finishes, 119
glue, 91
gussets, 30

H

hard chrome, 164
hard coats, 111
hardware, 14, 84
heat-curing systems, 106
heat pipes, 158
hex holes, 85
high-gloss finishes, 163
hot-air remelting, 104
hot-plate welding, 90
hot runner designs, 149
hot-runner gates, 149
hot runner systems, 149
hot sprue bushings, 134
hot stamping, 118

I

impact, 76
impact performance, 19, 76
in-mold decorating, 109
in-mold transfer decoration, 109
injection blow molding, 13
injection molding, 10
interlocking edge, 93
internal runners, 22
internal threads, 37, 127
internally heated, 149
isochronous stress-strain curve, 55

J

“jiggler” pin, 127

K

knockout pins, 128
KO sleeves, 128

L

labels, 118
laser, 102
laser machining, 102
laser printing, 117
latches, 86
leader pins, 124
lettering, 40
life expectancy, 9
lifter rails, 126
lifters, 35
locating ring, 124
logos, 15
long-term loads, 59, 73
lost-core process, 69
louvers, 36
Luer tubing connectors, 39

M

machining stresses, 97
manufacturing costs, 15
markings, 15
masking, 108
manifold, 149
material discoloration, 153
mating edges, 93
matte finish, 163
mechanical fasteners, 84
mechanical loading, 8
metallic coatings, 111
milling, 101

mini-sprue gates, 150
mismatch, 33
modified-tunnel gate, 143
mold base, 124
mold cooling, 153
mold draft, 130
mold flexure, 130
mold interlocks, 164
mold metals, 162
mold release, 130
mold-filling analysis, 136, 137
mold-release coatings, 164
molded-in hinges, 84
molded-in stress, 148
molded-in threads, 37
moment of inertia, 61
multi-shell process, 69

N

naturally balanced runners, 137, 153
nesting features, 84

O

orientation, 94
overflow wells, 132

P

packing, 135, 145, 160
pad painting, 108
pad printing, 116
paint curing, 106
paint soak, 107
paints, 105
parallel circuits, 158
part design checklist, 169
part ejection, 32, 128
parting line, 121
parting-line vent, 131
permissible strain, 59
photoetching, 119, 163
pinpoint gates, 144
plate deflection, 65, 75
plating adhesion, 113
plating racks, 113
Poisson's ratio, 53
polishing, 103, 163
polyurethane paints, 105
porous metal, 132
powdered paint, 109
press nozzle tip, 133
pressure gradient, 152
primary-runner diameters, 136
proportional limit, 52
prototype testing, 17
prototype molds, 161
punching, 100
PV factor, 43
PV limit, 43

Q

quick disconnects, 160

R

radiation, 8
radius-to-thickness ratio, 31
reamers, 101
reaming, 97
recycling, 84, 86, 88, 92
repair, 84, 86, 88, 92
retention features, 92
return pins, 124
reverse-injection molds, 128
rework, 17
Reynolds number, 159
rib design, 24
rib location, 27
rib size, 26
rib thickness, 24
ribs, 24, 71, 72
rivets, 84
Rockwell hardness, 163
rolling, 108
rotomolding, 13
"round-bottomed" trapezoid, 135
runner system, 135
runner thickness, 135
runners, 134

S

S-N curves, 56
safety factors, 59
sandblasting, 119
sanding, 103
sanding marks, 103
satin finishing, 104
saw guides, 99
sawing, 99
scrap, 17
scrapers, 104
scraping, 104
scratches, 103
screening, 116
screws, 84
secant modulus, 49, 58
second-surface film decorating, 111
secondary-runner diameters, 136
self-tapping screws, 85
semicrystalline plastics, 106
series circuits, 158
shape, 67
sharp corners, 30
shear modulus, 66
shear rate limits, 146
shear stress, 65
shrinkage, 147, 154, 160
shrinkage analysis, 161
side-action slides, 125
side mills, 101
sink, 21, 24, 28
skip-tooth blades, 99
slides, 34
slotted holes, 94, 95
snap-fit joints, 85
solvent bonding, 91
spark erosion, 163
spin welding, 91

spiral channels, 156
spiral flow data, 148
splay, 132
split cavities, 35
split cores, 35
spoked runners, 137
spray painting, 107
spraying, 107
spring-clip fasteners, 84
spring-loaded lifters, 126
sprue, 133
sprue bushing, 124, 133
sprue orifice, 133
sprue taper, 134
sputter deposition, 114
stack mold, 123
stainless steel, 162
static friction, 53
steel-rule dies, 100
steel safe, 161
stencil, 109
stiffness, 46, 67
strain limits, 59
stress concentration, 28, 30, 76, 79
stress-concentration factor, 59
stress limits, 59
stress relaxation, 47, 54, 56, 74, 75
stress-strain behavior, 48
stripper plates, 128
stripping undercuts, 34
sublimation ink transfer, 117
sucker pins, 139, 142
surface appearance, 154
surface contamination, 109
surface-crowning, 113
surface treatments, 163
symmetry, 94

T

tab gates, 140
tangent modulus, 52
tapered drops, 139
tapered pipe threads, 38
tapered threads, 38
tapping, 99
temperature, 8
tensile modulus, 49, 52, 58
tensile properties, 51
tensile stress, 61
tensile stress at break, 52
tensile stress at yield, 52
texture, 119, 163
thermal conductivity, 155
thermal expansion, 80, 94, 151
thermal isolation, 151
thermal load, 80, 156
thermoforming, 12
thickness transitions, 21
thin-wall molding, 20
thin-walled parts, 20, 25, 129, 145, 148, 159
thread pitch, 38
thread profiles, 37
threaded inserts, 85
threads, 99
three-plate mold, 122, 139
three-plate runners, 139
tight-tolerance holes, 34
tolerances, 40, 94
tool steel, 162
torsion, 66
trapped air, 132
tumbling, 104
tunnel gates, 141
turbulent flow, 159
turning, 101
two-component paint systems, 106
two-plate mold, 121

U

ultimate strength, 53
ultrasonic welding, 89
undercuts, 34, 125
unscrewing cores, 37
unscrewing mechanisms, 127
use of moduli, 58
UV-cured adhesives, 91

V

vacuum metallizing, 114
valve-gated hot runners, 151
vapor honing, 104
vent channel, 132
vent designs, 36
vent placement, 131
vents, 130
vibration welding, 90
vinyls, 105
viscoelasticity, 46
voids, 21
Voight-Maxwell model, 46
volatile organic compounds, 106

W

wall thickness, 19, 70
warpage, 25, 147, 154
washers, 85
waterborne coatings, 106
weather resistance, 8
weld lines, 132, 147
welding, 88
wet sanding, 103
wiping, 108
witness marks, 129

Y

yield point, 52
Young’s modulus, 49

PART DESIGN CHECKLIST

For Injection-Molded Engineering Thermoplastics

Material Selection Requirements					
Loads	☐ Magnitude	☐ Duration	☐ Impact	☐ Fatigue	☐ Wear
Environment	☐ Temperature ☐ Lubricants	☐ Chemicals ☐ UV Light	☐ Humidity	☐ Cleaning Agents	
Special	☐ Transparency ☐ Flammability	☐ Paintability ☐ Cost	☐ Plateability ☐ Agency Approval	☐ Warpage/Shrinkage	
Part Details Review					
Radii	☐ Sharp Corners	☐ Ribs	☐ Bosses	☐ Lettering	
Wall Thickness					
Material	☐ Strength	☐ Electrical	☐ Flammability		
Flow	☐ Flow Length ☐ Picture Framing	☐ Too Thin ☐ Orientation	☐ Avoid Thin to Thick		
Uniformity	☐ Thick Areas	☐ Thin Areas	☐ Abrupt Changes		
Ribs	☐ Radii ☐ Base Thickness	☐ Draft	☐ Height	☐ Spacing	
Bosses	☐ Radii ☐ Base Thickness	☐ Draft ☐ Length/Diameter	☐ Inside Diameter/Outside Diameter		
Weld Lines	☐ Proximity to Load	☐ Strength vs. Load	☐ Visual Area		
Draft	☐ Draw Polish	☐ Texture Depth	☐ 1/2 Degree (Minimum)		
Tolerances	☐ Part Geometry	☐ Material	☐ Tool Design (Across Parting Line, Slides)		
Assembly Considerations					
Press Fits	☐ Tolerances	☐ Hoop Stress	☐ Long-Term Retention		
Snap Fits	☐ Allowable Strain	☐ Assembly Force	☐ Tapered Beam	☐ Multiple Assembly	
Screws	☐ Thread-Cutting vs. Forming		☐ Avoid Countersinks (Tapered Screw Heads)		
Molded Threads	☐ Avoid Feather Edges, Sharp Corners, and Pipe Threads				
Ultrasonics	☐ Energy Director	☐ Shear Joint Interference			
Adhesive and Solvent Bonds	☐ Shear vs. Butt Joint Compatibility ☐ Trapped Vapors				
General	☐ Stack Tolerances ☐ Thermal Expansion	☐ Assembly Tolerances ☐ Component Compatibility		☐ Care with Rivets and Molded-In Inserts	
Mold Concerns					
Warpage	☐ Cooling (Corners)	☐ Ejector Placement			
Gates	☐ Type	☐ Size	☐ Location		
Runners	☐ Size and Shape ☐ Cold-Slug Well	☐ Sprue Size ☐ Sharp Corners	☐ Balanced Flow		
General	☐ Draft	☐ Part Ejection	☐ Avoid Thin/Long Cores		

BAYER CORPORATION • 100 Bayer Road • Pittsburgh, PA 15205-9741 • Phone: (412) 777-2000
For further design assistance in using Bayer's engineering thermoplastics, contact a field market development representative at a regional office near you.
USA Sales Offices:
CA: 9 Corporate Park Drive, Suite 240, Irvine, CA 92714-5113 • 1-949-833-2351 • Fax: 1-949-752-1306
MI: 2401 Walton Blvd., Auburn Hills, MI 48326-1957 • 1-248-475-7700 • 1-248-475-7701
NJ: 1000 Route 9 North, Suite 103, Woodbridge, NJ 07095-1200 • 1-732-726-8988 • Fax: 1-732-726-1672
IL: 9801 W. Higgins Road, Suite 420, Rosemont, IL 60018-4704 • 1-847-692-5560 • Fax: 1-847-692-7408
Canadian Affiliate:
Ontario: 77 Belfield Road, Etobicoke, Ontario M9W 1G6 • 1-416-248-0771 • Fax: 1-416-248-6762
Quebec: 7600 Trans Canada Highway, Pointe Claire, Quebec H9R 1C8 • 1-514-697-5550 • Fax: 1-514-697-5334

Radii

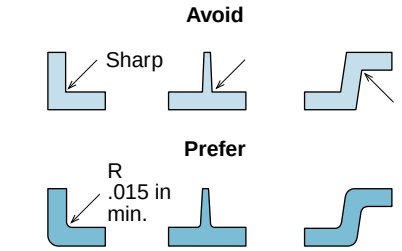

Wall Uniformity

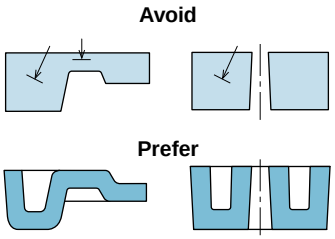

Ribs

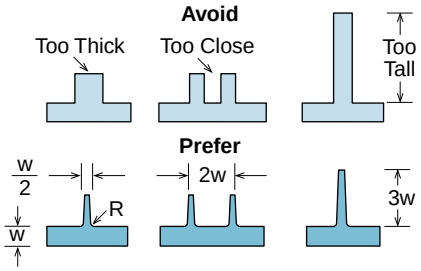

Bosses

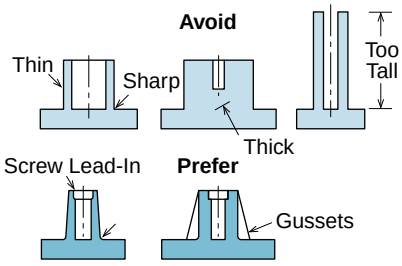

Draft

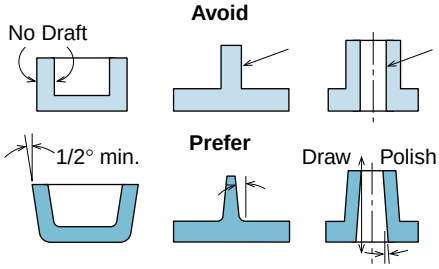

Snap-Fit

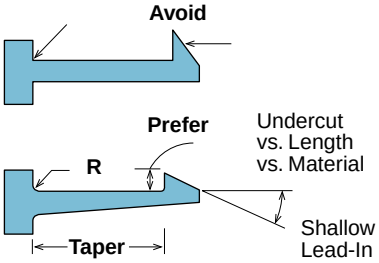

Screws

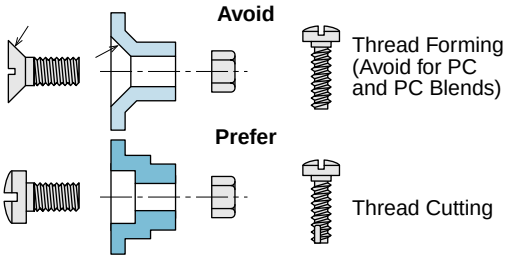

Molded-In Threads

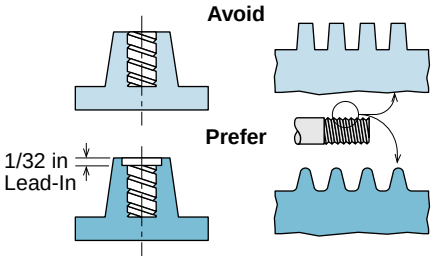

Picture Framing

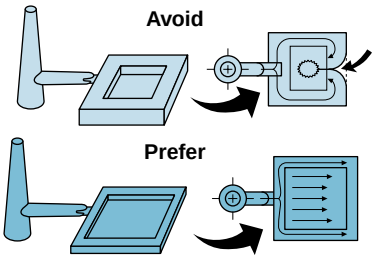

Warpage

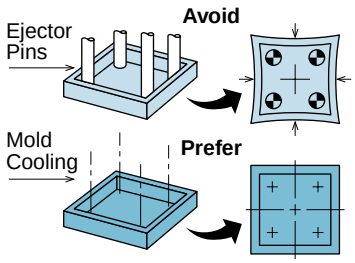

NOTES

Bayer Corporation • 100 Bayer Road • Pittsburgh, PA 15205-9741 • 1-800-622-6004
http://www.bayer.com/polymers-usa

Sales Offices:

California: 9 Corporate Park Drive, Suite 240, Irvine, CA 92506-5113
1-949-833-2351 • Fax: 1-949-752-1306

Michigan: 2401 Walton Boulevard, Auburn Hills, MI 48325-1957
1-248-475-7700 • Fax: 1-248-475-7701

New Jersey: 1000 Route 9 North, Suite 103, Woodbridge, NJ 07095-1200
1-732-726-8988 • Fax: 1-732-726-1672

Illinois: 9801 W. Higgins Road, Suite 420, Rosemont, IL 60018-4704
1-847-692-5560 • Fax: 1-847-692-7408

Canadian Affiliate:

Ontario: Bayer Inc.
77 Belfield Road, Etobicoke, Ontario M9W 1G6
1-416-248-0771 • Fax: 1-416-248-6762

Quebec: Bayer Inc.
7600 Trans Canada Highway, Pointe Claire, Quebec H9R 1C8
1-514-697-5550 • Fax: 1-514-697-5334

Note: The information contained in this bulletin is current as of April 2000. Please contact Bayer Corporation to determine whether this publication has been revised.

Printed on recycled paper KU-GE028 Copyright © 2000, Bayer Corporation Printed in U.S.A. 570 (25M) 04/00