Programmable Logic Controllers

Assignment One

Jack Spillett

Eastman Chemical Company

Contents

1.0 Introduction - Page 2

2.0 Research into P.L.C. Systems - Page 2

3.0 Factory IO System and Explanation - Page 5

4.0 Program and Explanation - Page 12

5.0 Human Machine Interface (H.M.I.) - Page 25

6.0 Flow Chart - Page 29

7.0 Conclusion and Improvements - Page 33

8.0 Appendices - Page 34

1.0 Introduction

This report outlines the steps that contributed to producing a PLC Controlled factory system which sorts four different packages based on size and weight. The system needed to include as a minimum four conveyor belts, two pushers, one conveyor scale, two diffuse sensors, one emergency stop, two buttons, one siren, one warning light and two stack lights. Each conveyor must be started in sequence to limit the current draw. A manual reset of Alarms needs to be included as well as an HMI, including buttons for starting and stopping the system, an E-Stop button, a counter with a button to reset all counters, a replication of the stack lights, fault and warning indicators and a fault and warning screen which displays alarm and warnings. The PLC used was a Siemens 1200 CPU model, with a KTP700 HMI, communicating using ProfiNet [20].

Assigning this task to students offered an opportunity to learn the fundamentals of programming programmable logic controllers. Using Factory I.O. the system contained multiple inputs and output devices, thus allowing for a better understanding of P.L.C.s.

2.0 Research into P.L.C. Systems

2.1 Types of P.L.C. Systems

Programmable Logic Controllers (PLCs) are industrial computers designed for industrial automation. They typically consist of a power supply, processor and a range of inputs and output modules (analogue and digital for example). PLCs have evolved to meet varying requirements across industries, leading to the development of different types [1]:

Unitary PLCs - Unitary PLCs integrate the power supply, input/output (I/O) modules, and processor into a single unit. Due to their simplicity and ease of deployment, they are cost-effective and ideal for small-scale standalone automation tasks [2]. However, their limited scalability makes them unsuitable for complex applications [3]. Unitary PLCs can be controlled remotely through a network (known as a distributed PLC network) [4].

Modular PLCs - Modular PLCs are customisable and expandable based on the system requirements i.e. by adding or removing I/O modules, communication ports, or processors [1]. They are commonly used for medium to large-scale industries, such as automotive manufacturing and small-scale chemical processing. Their modular nature supports future upgrades, making them versatile for dynamic industrial needs [3].

Rack-Mounted PLCs - Rack-mounted PLCs consist of different modules installed in a rack system. They offer high performance and scalability, making them suitable for complex automation systems, such as power plants, chemical processes or large assembly lines [3]. Their ability to handle hundreds or thousands of I/O signals and complex control algorithms is their major selling point, but their initial cost and complicated setup can be a drawback [4].

Safety PLCs - Safety PLCs are designed with built-in redundancy and fail-safe mechanisms for applications where safety is critical, such as robotics, SIS Systems or transportation systems [4],[5]. These PLCs comply with safety standards like IEC 61508 [6]. While ensuring operational safety, their specialised design often increases costs [1].

2.2 Common P.L.C.s in Industry

P.L.C.s can be programmed in various languages, including Ladder, Function Block, Sequential Function Chart, Structured Test, and Instruction List [21]. Brands such as Siemens, Rockwell Automation (Allen-Bradley), Mitsubishi, Schneider Electric, and Omron are industry leaders in PLC systems, each with unique features and applications.

Siemens PLCs - Siemens is a leader in industrial automation, with its SIMATIC PLC series being one of the most widely adopted PLC families used globally. SIMATIC PLCs, particularly the S7 series, offer modularity, high-speed performance, and advanced communication protocols [7]. Siemens' TIA (Totally Integrated Automation) Portal, is designed to be used with Siemens PLCs, streamlining programming and system diagnostics. However, the initial cost and complexity of configuration can be a limitation for smaller businesses [8].

Rockwell Automation (Allen-Bradley) - Allen-Bradley PLCs, produced by Rockwell Automation, are renowned for their user-friendly interfaces and seamless integration with Rockwell's FactoryTalk software [9]. The ControlLogix and CompactLogix series are popular for applications involving food and beverage processing, to processes involving oil and gas [10]. Known for reliability and ease of use of Allen-Bradley PLCs in industries with strict compliance and safety standards. However, their proprietary systems are often incompatible with non-Rockwell devices [9].

Mitsubishi Electric PLCs - The MELSEC series provides a balance of performance and affordability, making it a preferred choice in Asia and other growing markets. These PLCs are particularly favoured in the textiles, HVAC systems, and electronics industries. MELSEC PLCs support open networks like Ethernet and CC-Link, facilitating integration into diverse systems [11].

Schneider Electric PLCs - Schneider Electric’s Modicon series is considered a pioneer in PLC technology, with the Modicon 084 being the first-ever PLC. Modern Modicon PLCs are valued for their scalability and energy efficiency, aligning with Schneider’s emphasis on sustainable automation. Used in water treatment and energy management systems, where their ability to integrate with IoT platforms adds significant value. However, some users report a steeper learning curve compared to other brands [12].

Omron PLCs - Omron specialises in compact, high-performance PLCs like the CP and CJ series, for discrete manufacturing processes such as packaging and assembly. Omron PLCs are known for their advanced motion control capabilities and integration with vision systems, enabling precise operations. Although renowned for accuracy and speed, Omron PLCs can be less common in large-scale process automation due to limited modularity [13].

Advancements focused on integrating PLCs with Industry 4.0 technologies, such as IoT, AI, and machine learning will affect their future use in the industry. For instance, Siemens and Schneider Electric have launched cloud-connected PLCs that enable remote monitoring and predictive maintenance. The shift toward edge computing and cybersecurity is also shaping the development of next-generation PLC systems [14].

2.3 PLCs Used in Industry

Table 1 - Pros and Cons of PLCs Used in Industry

Model	Pros	Cons
Siemens SIMATIC S7-300 Figue 1 - Siemens SIMATIC S7 - 300 [15]	• High-Speed Performance • Modular • Advanced Integration • Large Support Network • Reliable for High-Demand Environments	• High Initial Cost • Steep Learning Curve for Beginners • Limited Flexibility with other brands • Will be discontinued and replaced by the S7 1200 and S7 1500 in the next few years.
Allen-Bradley CompactLogix 5480 Figure 2 - Allen-Bradley CompactLogix 5480 [16]	• User-friendly Interface • Seamless Integration with FactoryTalk Software • Extensive Diagnostics and Troubleshooting Tools • Strong Safety features for Critical Processes • Wide Range of Models	• Higher Cost Compared to Competitors. • Rockwell-specific Software licence Required for Optimal use
Mitsubishi Electric's MELSEC-A0J2H Figure 3 - Mitsubishi Electric's MELSEC-A0J2H [17]	• Affordable and Compact • Support for Networks (Ethernet, CC-Link, etc.) • Excellent for Mid-Scale Applications • Low Maintenance Requirements	• Limited Scalability for Large-Scale Processes • Fewer Advanced Features for Process Automation
Schneider Electric's Modicon M221 Figure 4 - Schneider Electric's Modicon M221 [18]	• Energy-Efficient • Integrates with IoT Platforms • Modular Design • Highly sustainable designs	• Steeper Learning Curve • Higher Costs • Integration Challenges with some Legacy Systems
Omron CP1H Figure 5 - Omron CP1H [19]	• High Performance for Discrete Manufacturing • Advanced Motion Control • Integrates with Vision Systems • Reliable in High-Speed Operations • Compact and Durable Designs for Small Systems	• Limited Modularity • Less Common in Large-scale Automation • Limited Support Network compared to Siemens or Allen-Bradley

3.0 FactoryIO System

3.1 System Requirements

Table 2 - System Requirements for Quantity

Component	Required Quantity	Quantity Used
Conveyor Belts	4	7
Pushers	2	2
Conveyor Scale	1	1
Diffuse Sensors	2	6
Emergency Stop	1	2
Buttons	2	3
Siren	1	1
Warning Light	1	1
Stack Lights	2	3
HMI	1	1

Table 3 - Stated System Requirements

Stated Requirements	Achieved
Conveyors start in sequence to limit the initial current draw.	Yes
Manual Buttons: Start, Stop, Emergency Stop and Reset	Yes
HMI Buttons: Start, Stop. Emergency Stop and Reset	Yes
Other HMI Requirements: Counters, Stack Lights, Fault and Warning Screen	Yes
The Warning Screen Requirements: Counter Warning Limit Exceeded	Yes
The Alarm Screen Requirements: Counter Alarm Limit Exceeded	Yes
An Emitter and Remover (in FactoryIO)	Yes
An Engineering Screen to alter Counter Limits	Yes

3.2 System Screenshots

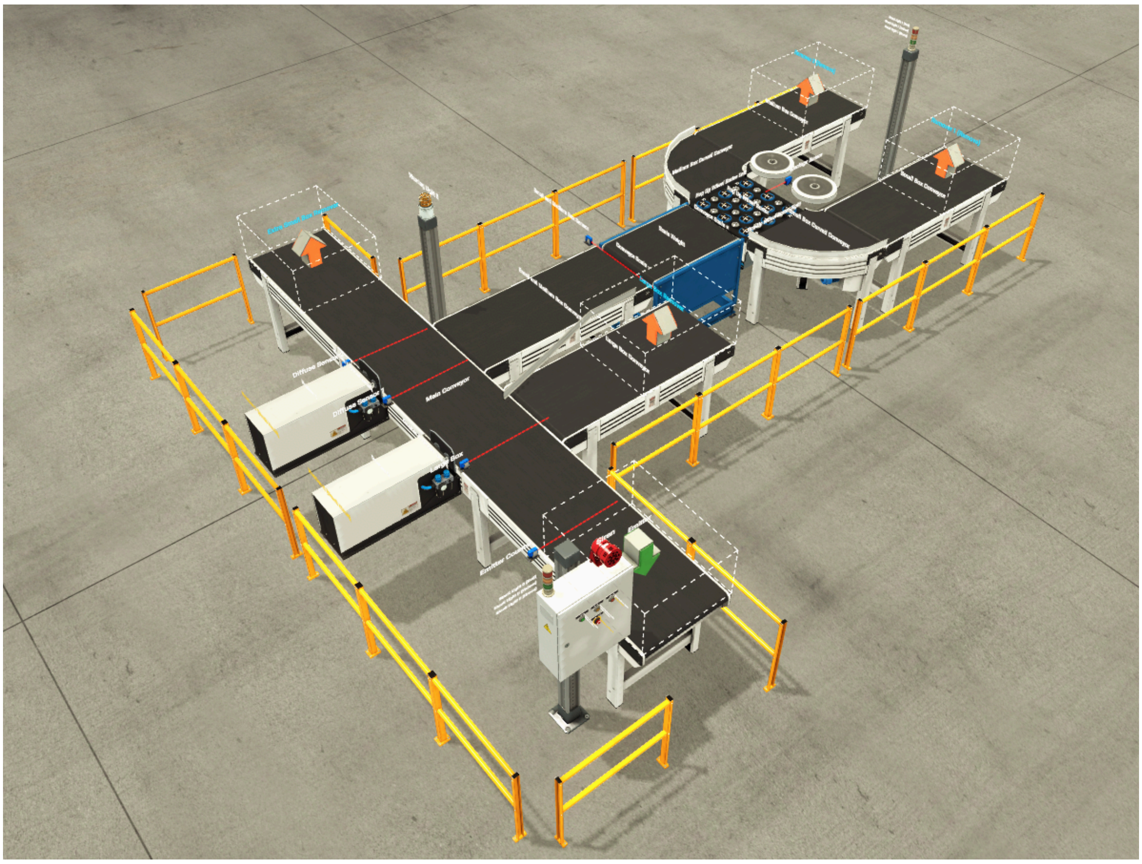

Figure 38 - Entire System

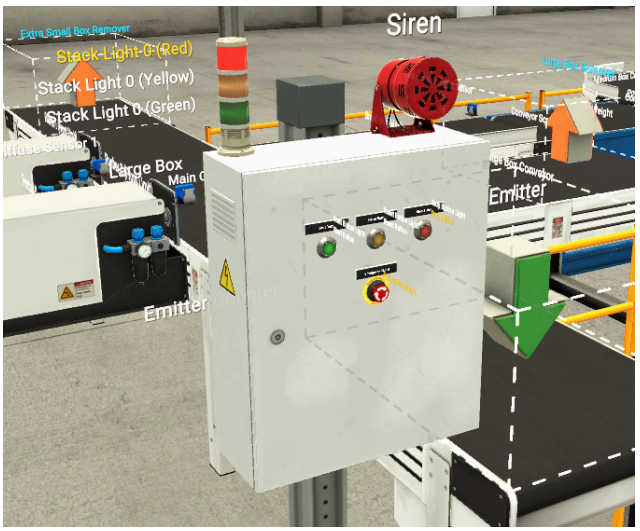

Figure 6 - Manual Control Station (Start, Stop and Reset Button, EStop, Siren and Stack Light 1)

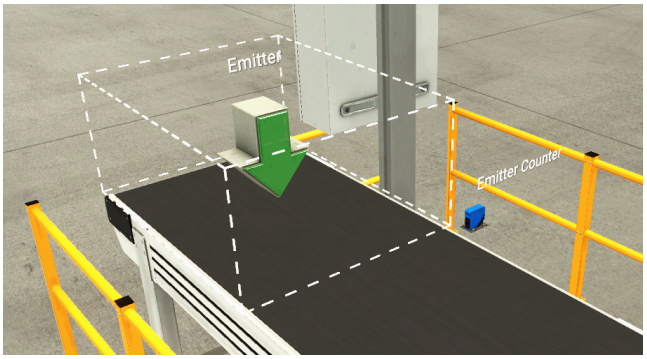

Figure 7 - Emitter and Emitter Counter Set-Up

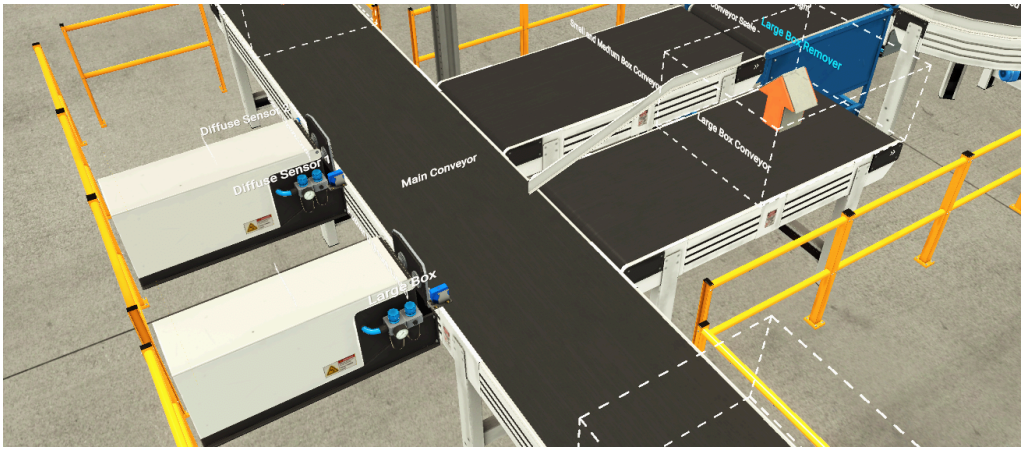

Figure 8 - Large Box Counter Sensor, Pusher, Conveyor and Remover

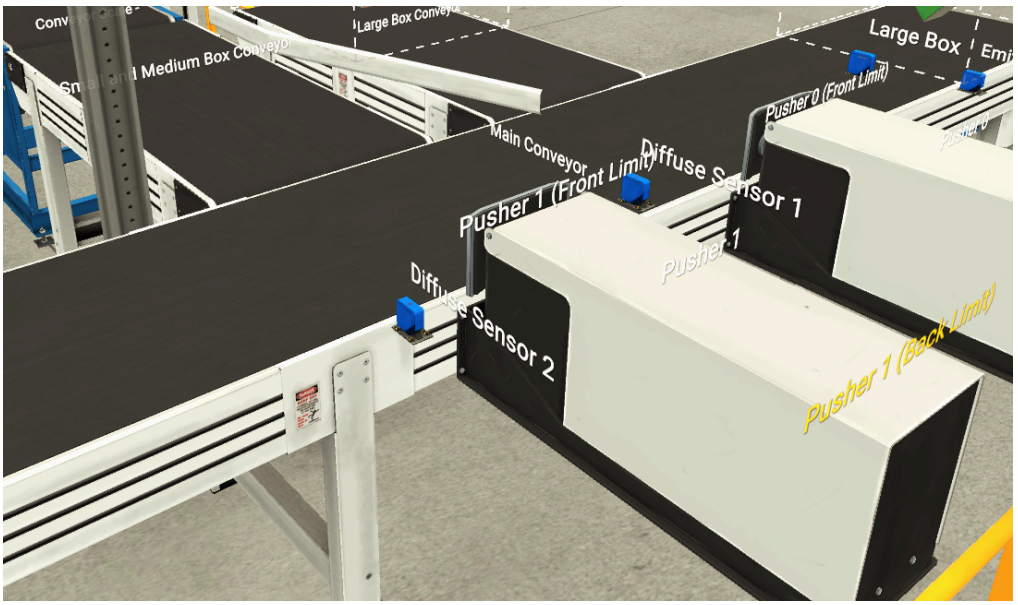

Figure 9 - Small and Medium Box Sensor and Pusher

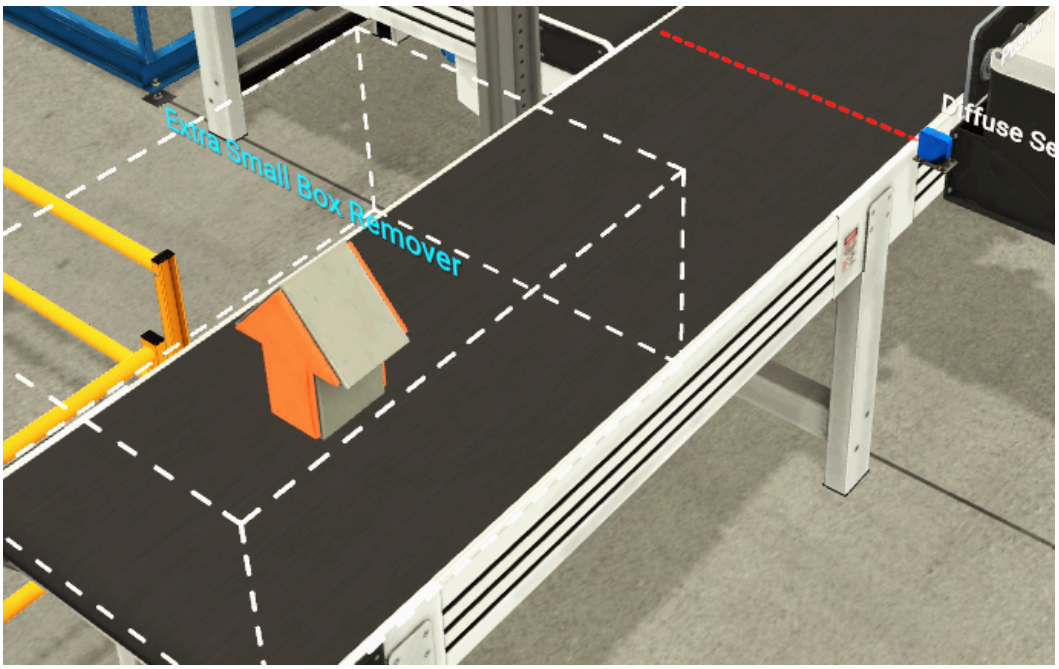

Figure 10 - Extra Small Box Counter Sensor and Remover

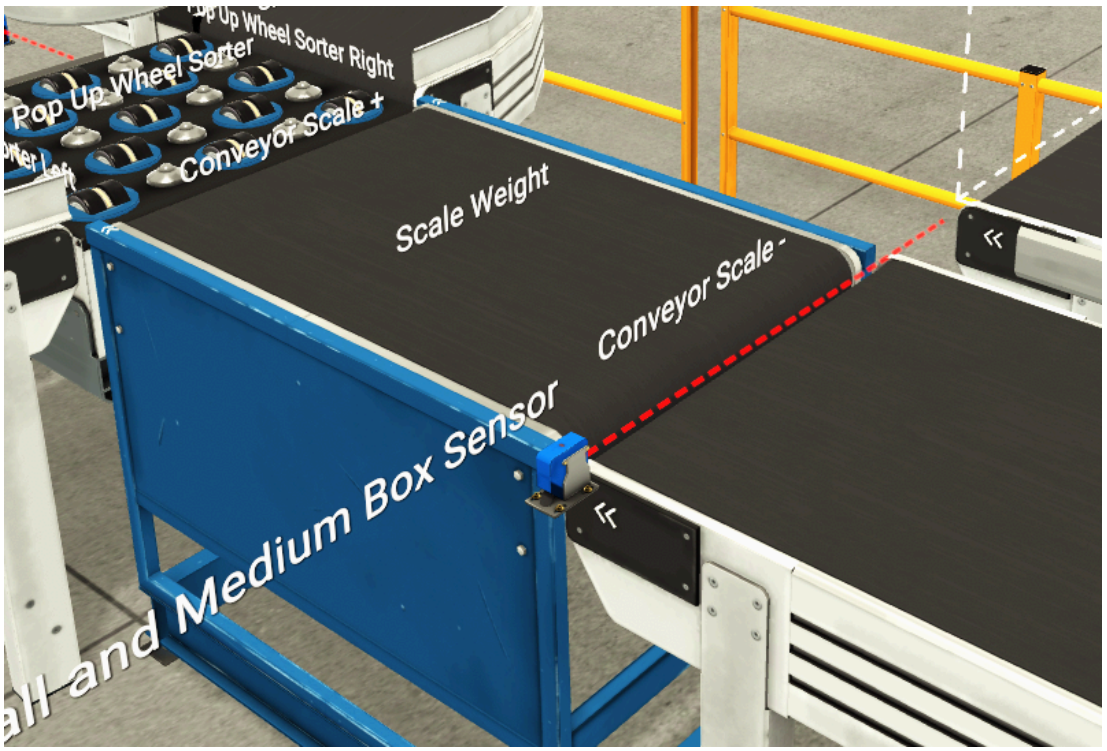

Figure 11 - Conveyor Scale, Pop-Up Wheel Sorter and Sensor

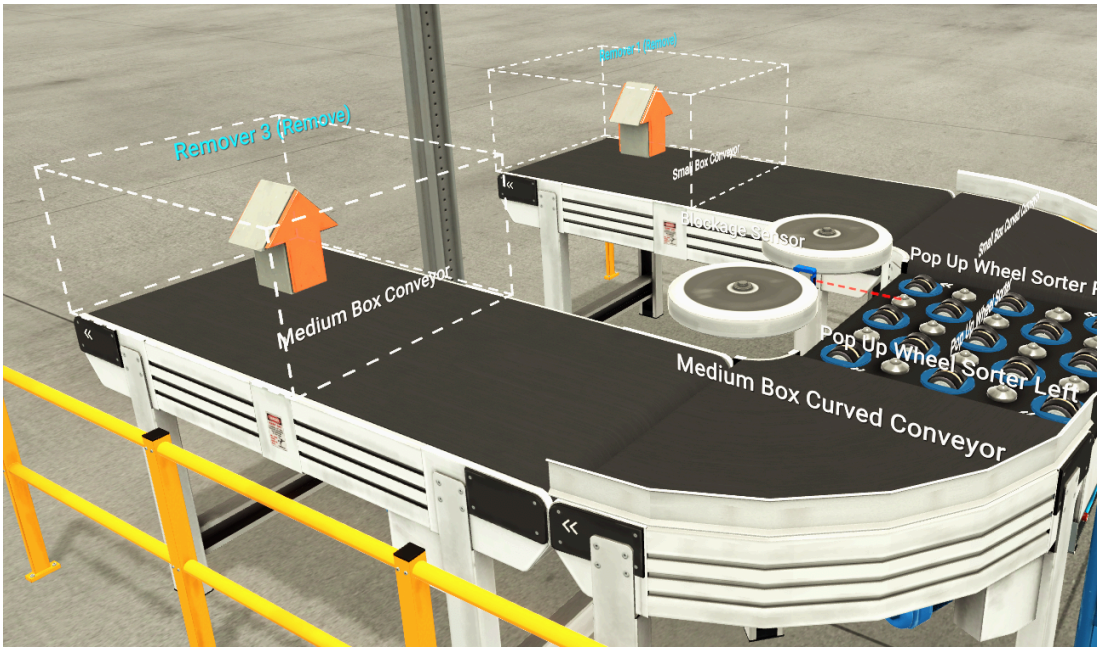

Figure 12 - Small and Medium Box Sorting System

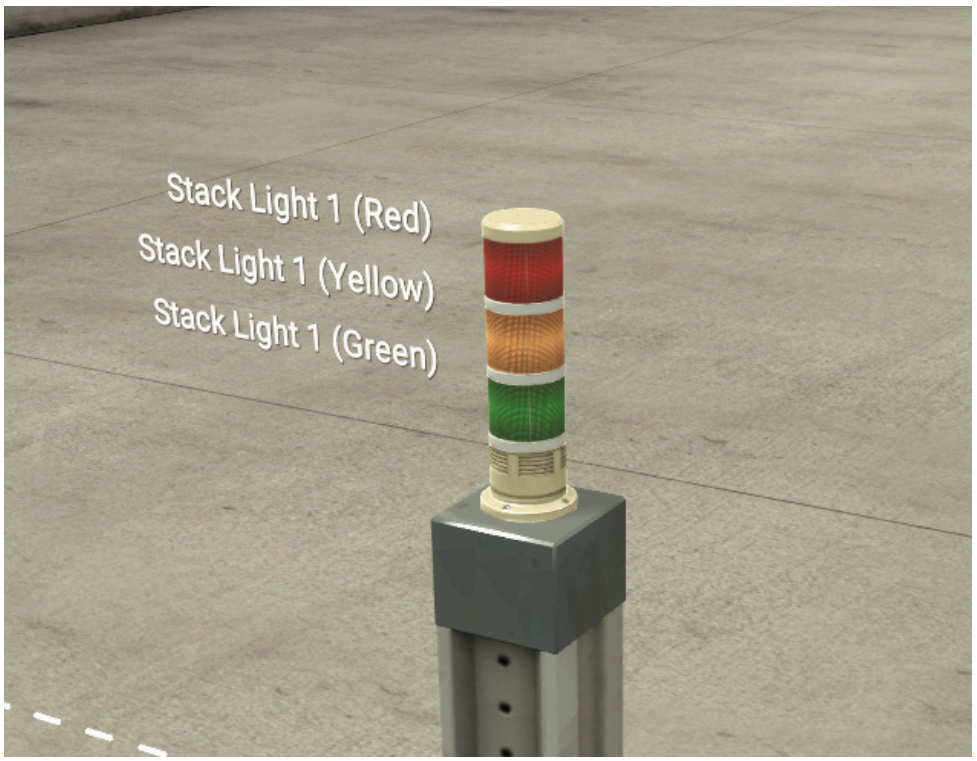

Figure 13 - Stack Light 2

Figure 14 - Warning Light

3.3 Factory IO System Description

After the Start Button is pressed, a Siren and a Warning Beacon are active for five seconds, then one after another each conveyor is started (taking 9 seconds in total), after another second, the emitter is started. The emitter places boxes on the main conveyor, where a diffuse sensor counts every box produced.

Another diffuse sensor detects if there is a large box (the sensor is high up so as not to pick up any other boxes), triggering a timer which perfectly times a pusher, to push the large box onto another conveyor to be removed. The sensor is also connected to a counter, which counts the number of large boxes.

If a large box hasn't been detected another sensor picks up if a small or medium box is on the main conveyor, triggering a timer, to push the small or medium box onto the conveyor at the right time. A box straightener was added for the Small and Medium Box Conveyor, as when a box is stopped on the Diffuse Sensor during weight measurement, it will not be in the typical position to be pushed, so it won’t be straight when pushed, without the box straightener being added.

After the small and medium boxes are on the conveyor, they pass through the path of another diffuse sensor, which starts a timer, and then passes onto a scale conveyor. When the timer finishes, all conveyors stop and the weight of the box is measured for 2 seconds.

Originally, the weight of the boxes was measured when moving however this was found to be inaccurate, hence all conveyors now stop. If only one conveyor was stopped a queue would be created, eventually resulting in a jam, so all conveyors are stopped while the weight is measured. After the weight has been determined all conveyors start again.

When the weight is determined, the boxes carry on to a pop-up wheel sorter which directs the small boxes to the right and the medium boxes to the left. Wheel aligners are added here to help the boxes along. The small box counter is increased when the pop-up wheel sorter is set to the right. The medium box counter is increased when the pop-up wheel sorter is set to the left. After being sorted the boxes carry on along curved conveyors, and a final straight conveyor before being removed.

Extra Small Boxes are missed by the Large Box Sensor and Small/Medium Box Sensor because they are very short. This allows them to reach the main conveyor, where they are picked up by another diffuse sensor to count the quantity after they are removed.

Outside of the main conveyor system, there are two Stack Lights (green when running, amber when weight is being measured or when the start-up sequence is being carried out and red when the system is stopped). There is also a Cabinet where the Start Button, Stop Button, Manual EStop, Alarm Reset Button and Siren are mounted. There is also a Warning Beacon, active during the first five seconds of start-up as a warning to operators. Safety Barriers have been added to resemble a real factory, where they would be needed to reduce the likelihood of an operator or passerby getting hurt. To further resemble a real factory the system was designed to minimise space while meeting all requirements.

4.0 Program

4.1 Program Networks and Tags

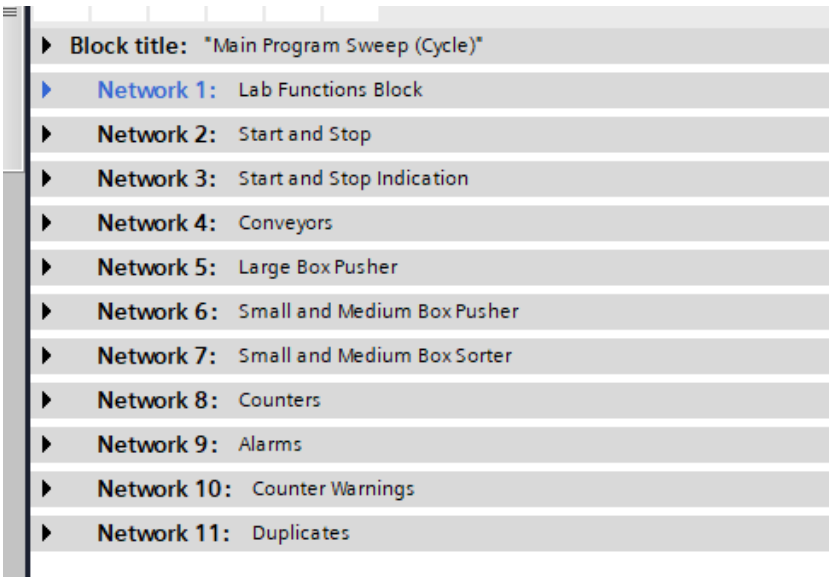

Figure 15 - Program Networks

Table 4 - PLC Tag Table

Name	Path	Data Type	Logical Address
Start Button	Default tag table	Bool	%I16.0
Stop Button	Default tag table	Bool	%I16.1
Conveyor 0	Default tag table	Bool	%Q16.0
Conveyor 1	Default tag table	Bool	%Q16.1
Green Stack Light	Default tag table	Bool	%Q16.5
Red Stack Light	Default tag table	Bool	%Q16.6
Small and Medium	Default tag table	Bool	%I16.3
Pusher 0	Default tag table	Bool	%Q17.0
Start Command	Default tag table	Bool	%M1.1
Conveyor 2	Default tag table	Bool	%Q16.2
Conveyor 3	Default tag table	Bool	%Q16.3
Siren	Default tag table	Bool	%Q16.7
Conveyor 4	Default tag table	Bool	%Q16.4
Pusher 1	Default tag table	Bool	%Q17.1
Large Box Sensor	Default tag table	Bool	%I16.2
Run Command	Default tag table	Bool	%M1.2
Pop Up Wheel Forward	Default tag table	Bool	%Q17.2
Pop Up Wheel Left	Default tag table	Bool	%Q17.3
Pop Up Wheel Right	Default tag table	Bool	%Q17.4
Scale Conveyor	Default tag table	Bool	%Q17.5
Scale	Default tag table	Real	%ID30

Medium Box Conveyor	Default tag table	Bool	%Q17.6
Extra Small Box Sensor	Default tag table	Bool	%I16.4
Master Alarm	Default tag table	Bool	%M10.0
On Scale	Default tag table	Bool	%I16.5
Stop Weight Detected	Default tag table	Bool	%M1.3
Weight Measurement	Default tag table	Bool	%M1.4
Measuring Time	Default tag table	Bool	%M1.6
Emmitter	Default tag table	Bool	%Q18.7
Small Box Conveyor	Default tag table	Bool	%Q17.7
Emergency Stop Button	Default tag table	Bool	%I16.6
Warning Light	Default tag table	Bool	%Q18.6
Extra Small Box Counter	Default tag table	USInt	%MB5
Small Box Counter	Default tag table	USInt	%MB7
Warning Reset	Default tag table	Bool	%M5.3
Scale Over Weight	Default tag table	Bool	%M5.4
Blockage Sensor	Default tag table	Bool	%I16.7
Sorter Blocked	Default tag table	Bool	%M5.5
Emitter Counter Sensor	Default tag table	Bool	%I17.0
Emitter Counter	Default tag table	USInt	%MB2
Total Output Counter	Default tag table	USInt	%MB3
Large Box Counter	Default tag table	USInt	%MB6
Medium Box Counter	Default tag table	USInt	%MB4
Master Reset	Default tag table	Bool	%M17.1
HMI Emergency Stop	Default tag table	Bool	%M17.2
Emergency Stop Alarm	Default tag table	Bool	%M17.3
Reset Button	Default tag table	Bool	%I18.7
2nd Green Stack Light	Default tag table	Bool	%Q18.3
2nd Warning Stack Light	Default tag table	Bool	%Q18.4
2nd Red Stack Light	Default tag table	Bool	%Q18.5
Start Up Beacon	Default tag table	Bool	%Q18.2
Output Sensor	Default tag table	Bool	%I17.1
Extra Small limit	Default tag table	USInt	%MB20
Small Limit	Default tag table	USInt	%MB21
Medium limit	Default tag table	USInt	%MB22
Large Limit	Default tag table	USInt	%MB23
Counter Reset ABC	Default tag table	Bool	%M24.0
Extra Small Box Limit Exceeded	Default tag table	Bool	%M30.1
Small Box Limit Exceeded	Default tag table	Bool	%M30.2
Medium Box Limit Exceeded	Default tag table	Bool	%M30.3
Large Box Limit Exceeded	Default tag table	Bool	%M30.4
Master Counter Exceeded	Default tag table	Bool	%M30.5
Counter Warning	Default tag table	Bool	%M30.6
Extra Small Alarm Limit	Default tag table	USInt	%MB40
Small Alarm Limit	Default tag table	USInt	%MB41
Medium Alarm Limit	Default tag table	USInt	%MB42
Large Alarm Limit	Default tag table	USInt	%MB43

4.2 Screenshots and Description

Network 1: Function Block for Communication

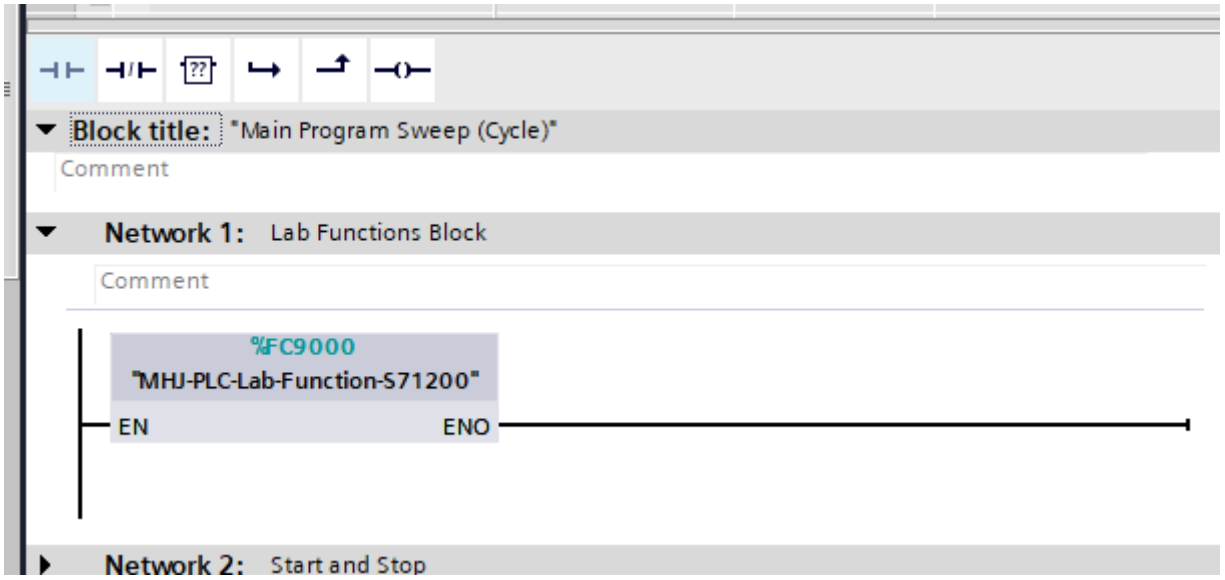

Figure 16 - Network 1

Network 2: Start and Stop

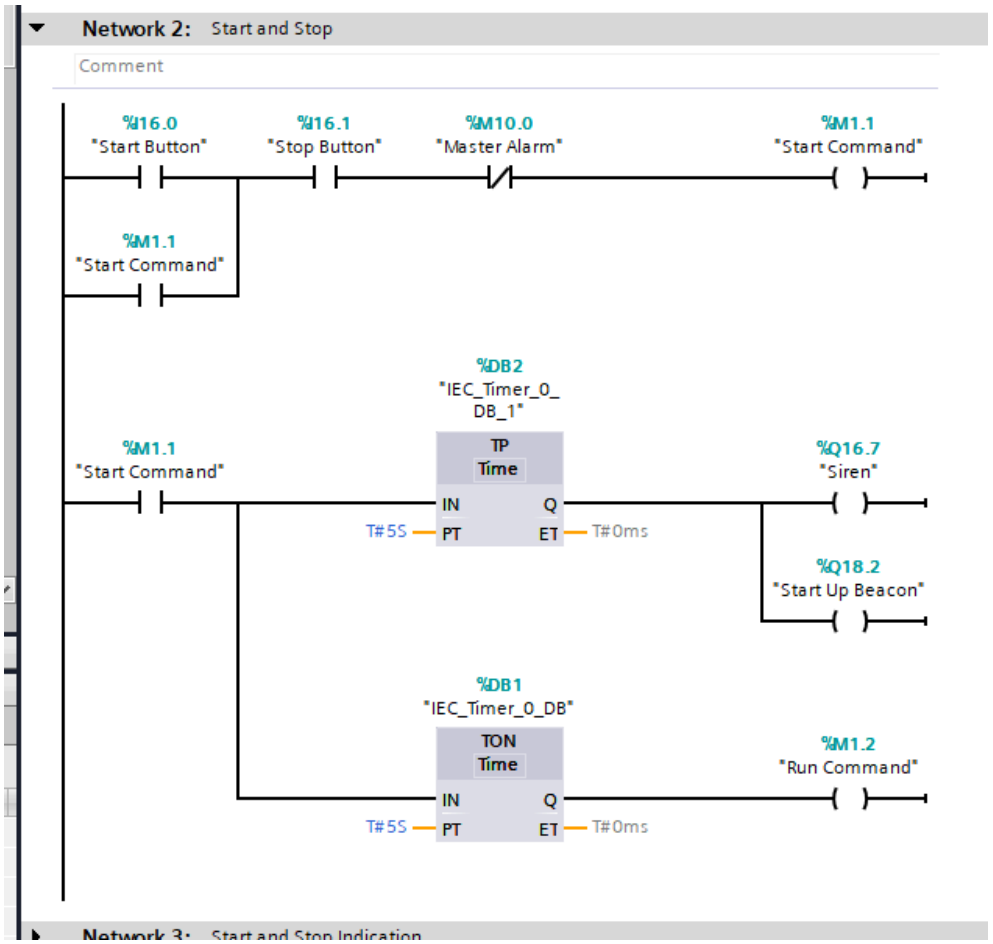

Figure 17 - Network 2

Network 2 contains the start and stop commands as well as the startup sequence timers (besides the conveyor start-up timers). When the Start button is pressed, the start command flag is energised and then retained using another normally open contact energised by the flag. To stop the start command, either the stop button has to be pressed (either on the HMI or on the control panel within FactoryIO) or the master alarm flag has to be energised.

When the start command is energised, a pulse generation timer is set for 5 seconds, enabling the Siren and Start-Up Warning Beacon within FactoryIO. If used in the real world, this would allow operators and engineers to get their hands away from the conveyors before start-up, if it was turned on accidentally. A pulse generation timer is used over an off-delay timer because an off-delay timer would be on constantly, a result of the start command flag being on constantly.

The energisation of the start command also starts an on-delay timer, which when finished after 5 seconds, enables the run command flag.

Network 3: Start and Stop Indication

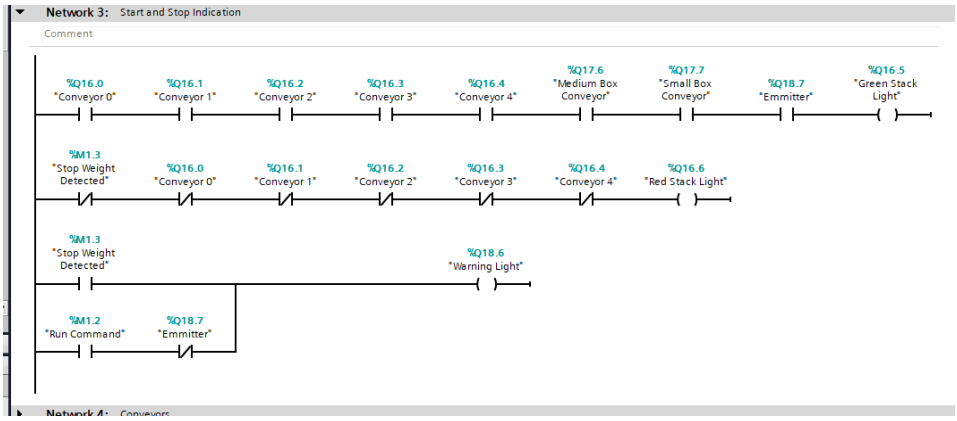

Figure 18 - Network 3

Network 3 contains the indication for the stack lights. The green stack light output is enabled when all the conveyors and emitters are energised. The red stack light is energised when all the larger conveyors are energised, besides when the “stop weight detected ” flag is energised (present when the system is weighing a box, and all conveyors stop). The stack warning light or amber light is energised when the “stop weight detected” flag is energised. It is also energised when the run command flag is energised, but not when the emitter is energised; to stop the amber stack light from being on when running normally, but still allowing it to be on, when all the conveyors are starting up one after another.

Network 4: Conveyors

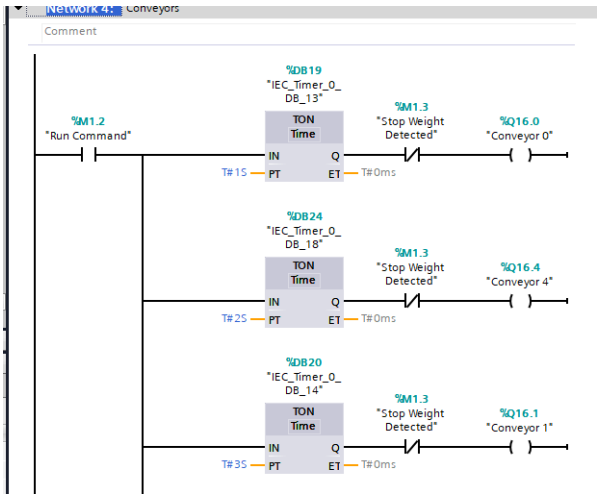

Figure 19 - Network 4

When the run command is energised, a series of on-delay timers are energised, finishing one after another, and starting up the conveyors one second after another. The final timer starts the emitter after another second, resulting in a conveyor start-up time of ten seconds. When the “stop weight detected” flag is energised, it will turn off the conveyors and emitter but won’t require the start-up delay again (to improve the sorting efficiency of the system).

Network 5: Large Box Pusher

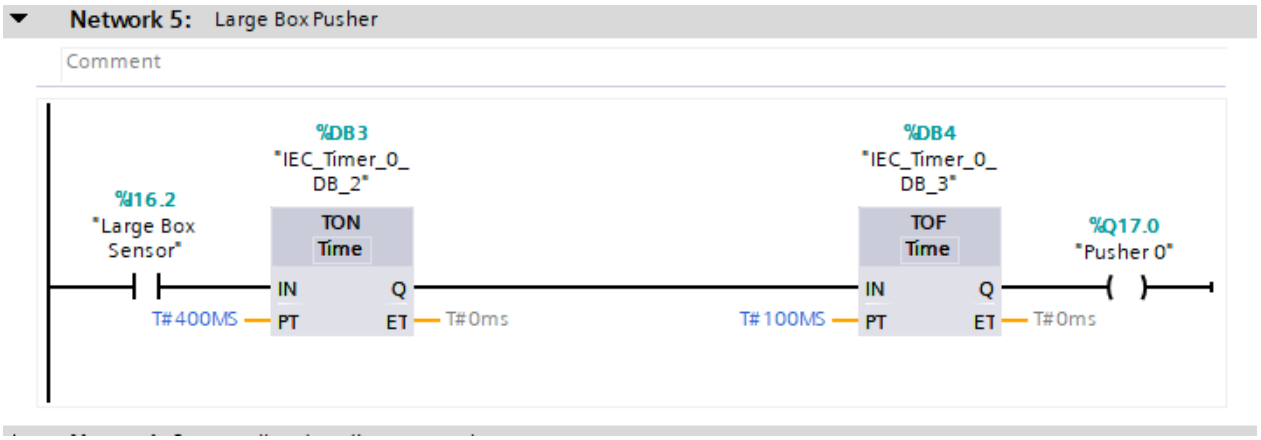

Figure 20 - Network 5

When the large box sensor is energised, an on-delay timer is started with a 400-millisecond delay, enabling the box to be pushed when central to the pusher. An off-delay timer is added to ensure that the pusher reaches full extension before retreating. The sensor only detects large boxes because it is mounted high enough to only detect them.

Network 6: Small and Medium Box Pusher

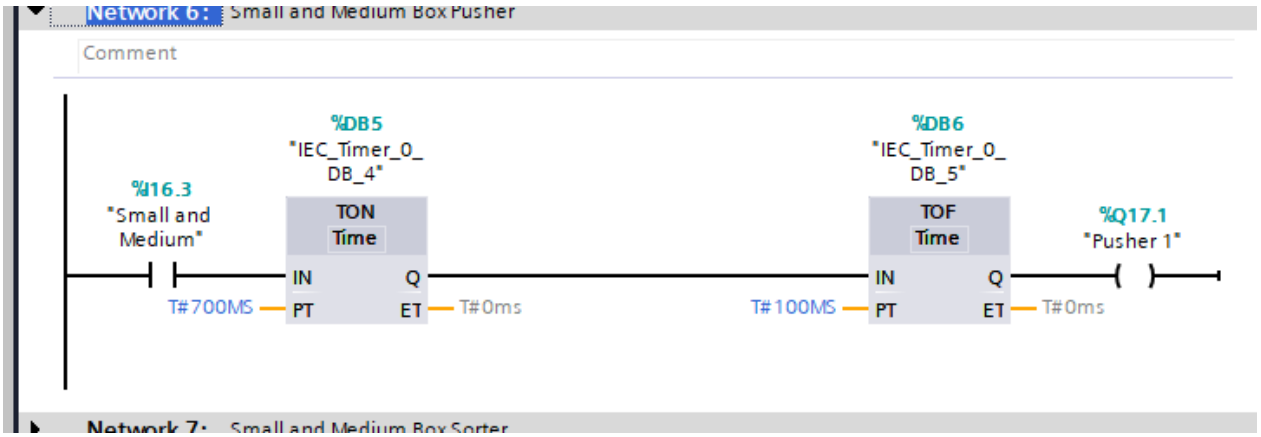

Figure 21 - Network 6

When the small and medium box sensor is energised, an on-delay timer is started with a 700-millisecond delay, enabling the box to be pushed when central to the pusher. An off-delay timer is added to ensure that the pusher reaches full extension before retreating. The sensor only detects small and medium boxes because it is mounted high enough to only detect them, rather than detecting extra small boxes too.

Network 7: Small and Medium Box Sorter

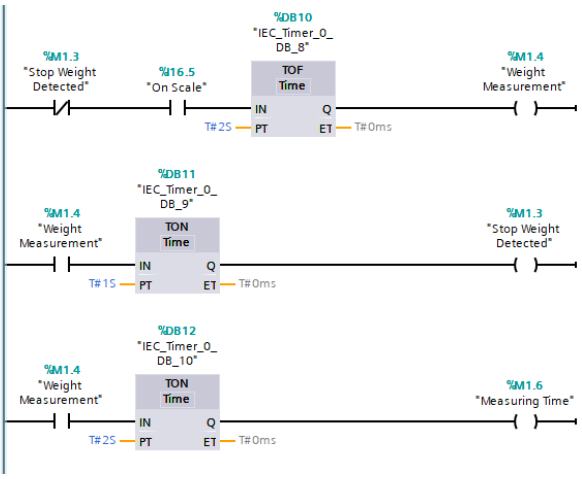

Figure 22 - Network 7A

When the “On Scale” diffuse sensor is energised, it starts an off delay timer for two seconds, on energising the weight measurement function flag. Which subsequently starts two delay timers, one of one second and another of two seconds. After one second, the “stop weight detected” flag stops all conveyors. After two seconds, the “measuring time” flag is energised. Using an off-delay timer to energise the on-delay timers means that after two seconds, the system will start again and the weight will be measured at the 2-second mark after everything has stopped and had time to steady.

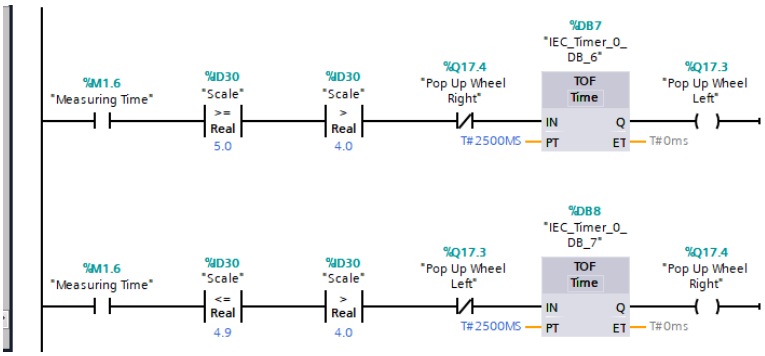

Figure 23 - Network 7B

When the “measuring time” flag is enabled, the analogue signal from the conveyor scale is used in two comparator functions. If greater than or equal to 5, the “Pop Up Wheel Left” output is energised, for 2.5 seconds using an off-delay timer. If less than or equal to 4.9, the “Pop Up Wheel Right” output is energised, for 2.5 seconds, again using an off-delay timer.

The greater than 4 comparator functions were added as well as the normally closed contacts were energised when the opposite-sized box output was enabled. This is a legacy function when an attempt was made to weigh the boxes without stopping the system. This was found to ultimately be unreliable. These functions were left in incase the system needed to sort the boxes without stopping.

Network 8: Counters

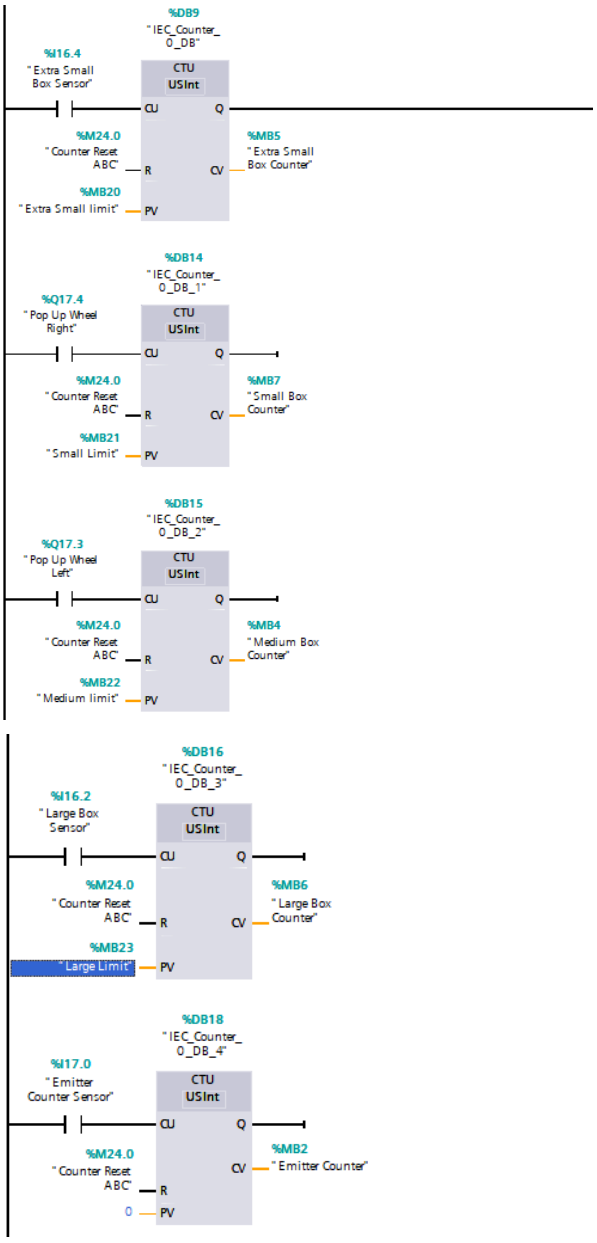

Figure 24 - Network 8A

Network 8 contains all the counter functions used within the HMI for the warnings and alarms. All counters use unsigned integers as the count value, all are reset using the “Counter Reset ABC” flag, energised through the HMI when the counter reset button is pressed. All PV counter inputs are connected to the relevant box sizes within the HMI and each counter has a flag allocation for the counter output value. The extra small box sensor (which is at the end of the main conveyor) is used to count all the extra small boxes. When the pop-up wheel right output is energised, this counts the number of small boxes. When the pop-up wheel sorter is set to left, this increases the count of the medium box counter. When the large box sensor detects a large box, this increases the large box counter. When the emitter box sensor detects a box, this increases the emitter counter.

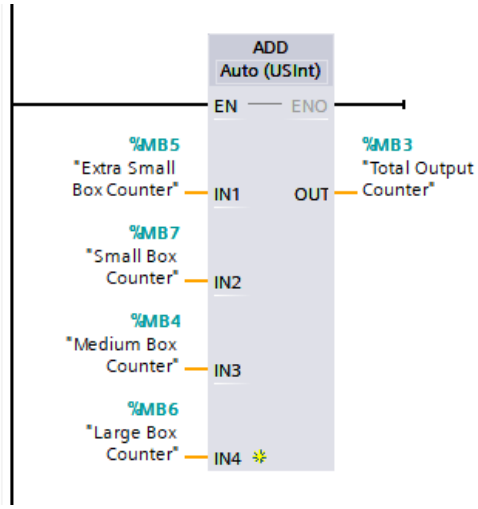

Figure 25 - Network 8B

The final part of Network 8 is an ADD math block, adding all the box counter values together so that the output of the system can be counted and compared to the number of boxes emitted. As all the counters are being reset individually, this block does not need to be reset as all inputs will reset to zero when the counter reset is pressed on the HMI.

Network 9: Alarms

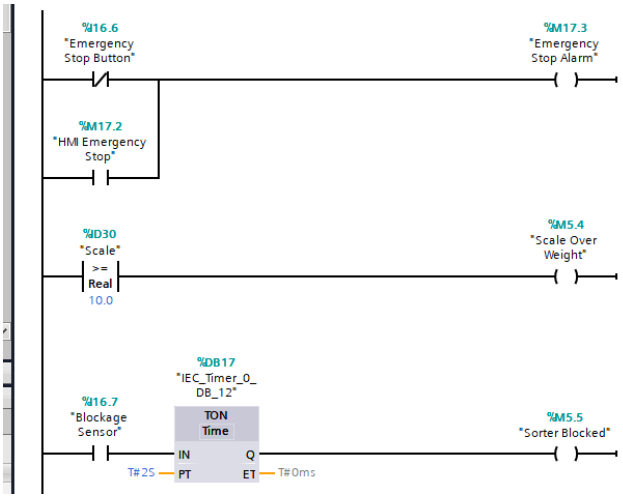

Figure 26 - Network 9A

The first section of network 9 is for detecting the alarm parameters. If either emergency stop is pressed, the emergency stop alarm flag is enabled. The estop in FactoryIO is a normally closed contact so a normally closed contact is required in TIA so that when the estop is pressed, the emergency stop alarm flag is energised. However, the HMI estop is a normally open contact, so a normally open contact is required in TIA, so when pressed, the emergency stop alarm flag is again energised. If the scale input is greater than 10, the scale overweight flag is energised (i.e. if someone falls onto the conveyor or there is a backup of boxes). The blockage sensor on the pop-up wheel sorter feeds into an on-delay timer, so when present for over two seconds, the sorter alarm flag is energised. The two-second timer was added to prevent slow-moving boxes on the pop-up wheel sorter from tripping the system.

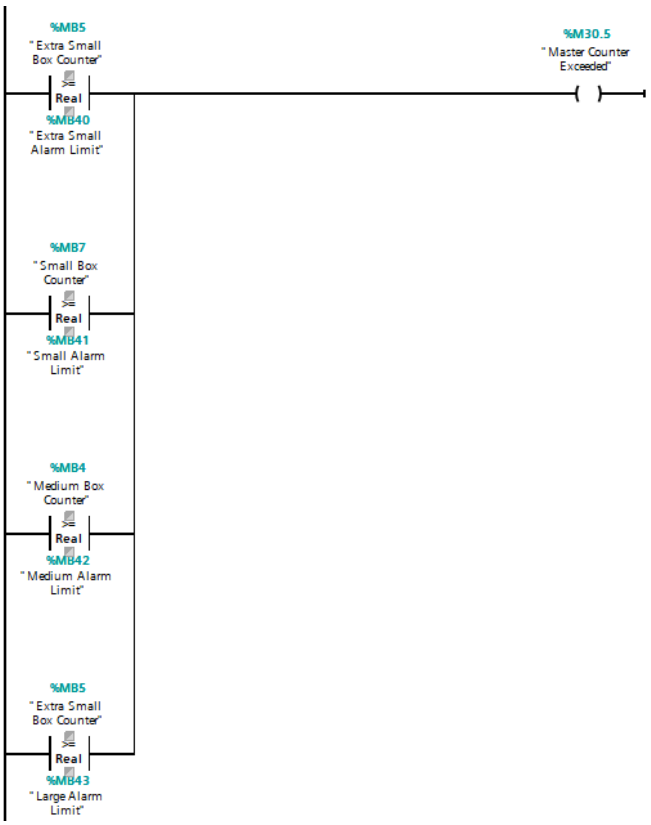

Figure 27 - Network 9B

The next part of network 9 is for the counter alarms, using comparator functions, if the counter output value is greater than the limit set using the HMI, the Master Counter Exceeded flag is enabled.

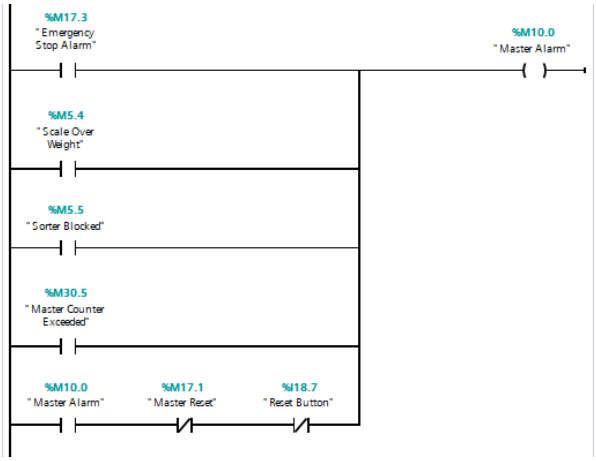

Figure 28 - Network 9C

The final part of network 9 uses the flags from the estops, blockage sensor, scale overweight and counter, to energise the master alarm flag. This stops the system at the very start of the program by stopping the Start Command Flag. The master alarm flag is retained using a normally closed contact energised using the same flag. The master alarm can only be reset once the initial issue, i.e. EStop alarm has been rectified, using either the reset button within FactoryIO or the reset button on the HMI.

Network 10: Warnings

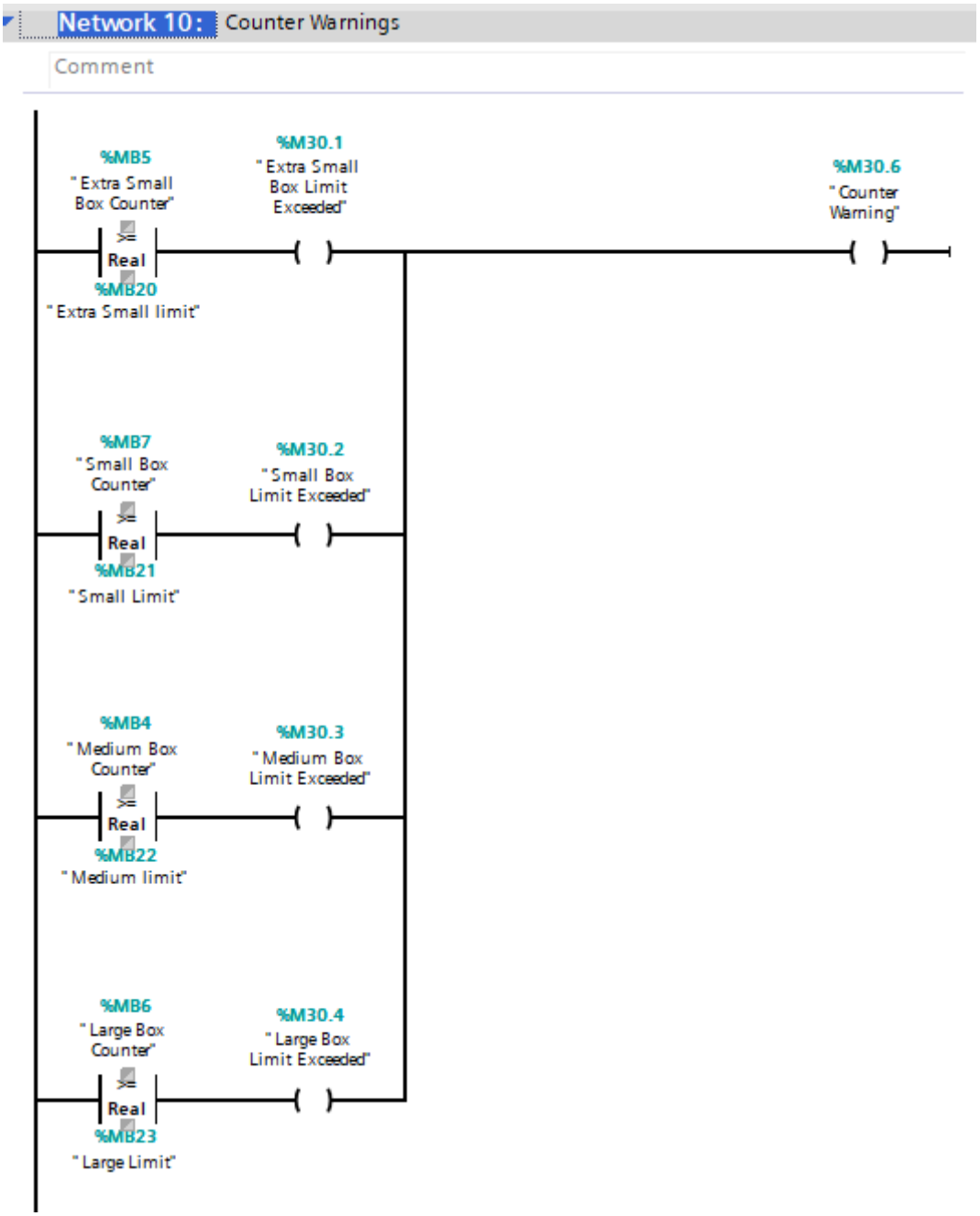

Figure 29 - Network 10

Network 10 contains the counter warnings for use on the HMI. If the counter value exceeds the counter warning limit assigned on the HMI, the associated box warning limit is energised as well as the master counter warning flag. All outputs are used on the HMI.

Network 11: Duplicates

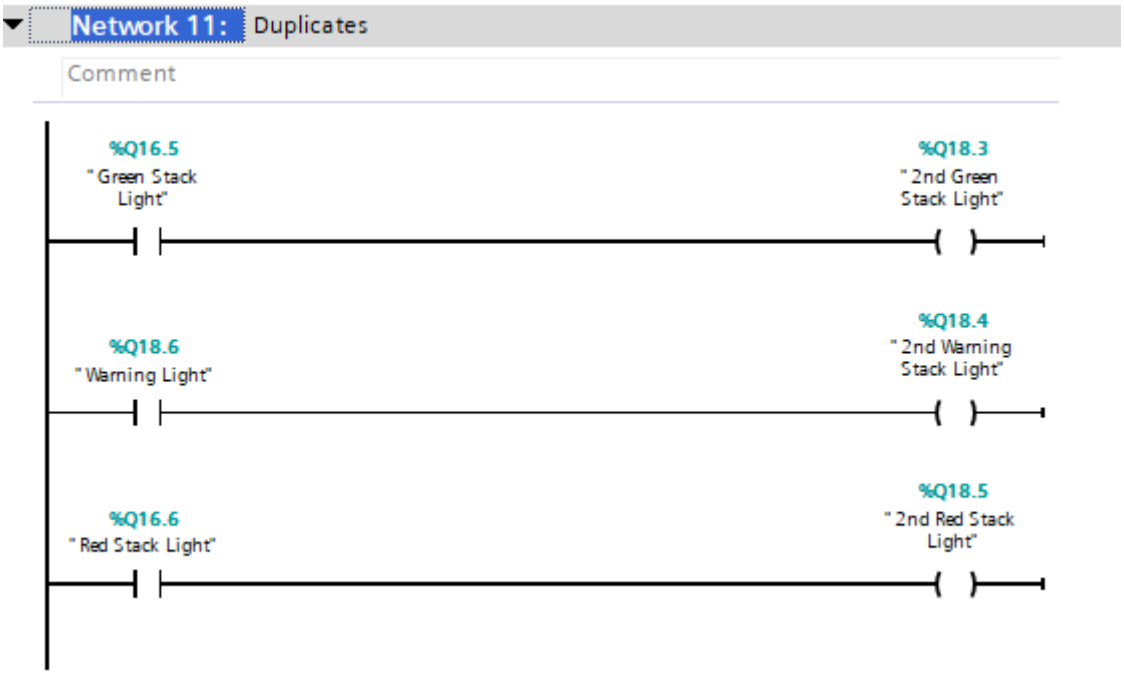

Figure 30 - Network 11

Network 11 is dedicated to duplicates. Originally only one stack light was used, however, two were required. In the real world, the second stack light outputs would be piggybacked off the first, meaning that the program would not need to be altered however, as this cannot be done in FactoryIO. Using the outputs of the first stack light to energise the outputs of the second was an easy option. Although the second stack lights outputs could be added in series to the first outputs, this appeared to be an easier option and easily allowed for more stack lights to be added if required.

4.3 Warnings and Alarms Logic

Warnings show on the warning screen and do not affect the system. Warnings warn operators of the system status, i.e. what part of the process they are on, if they are closer to reaching alarm levels etc.

- The System Running warning is present when the system has started running normally.
- The Start-Up Sequence warning is present during start-up (when the Siren and Warning Beacon are on, not during the start-up of the conveyors).
- The Weighing warning is present when the conveyors are stopped and box weighing is occurring, to stop operators from thinking the system is in alarm when it is just weighing boxes.
- A counter-warning alarm (and specific counter-warning alarms) has been added to show the operator when the system is close to reaching alarm levels (these can be altered from the engineering screen).

Alarms show on the alarm screen and stop the system when detected. The alarm issue must be rectified before being reset using the HMI or Push Button.

- The Emergency Stop alarm shows red when either of the Emergency Stops has been pressed, to make fault finding why the system won't start easier for engineers.
- A Scale Overweight alarm stops the system if there is an abnormally large weight i.e. a blockage or large box on the conveyor scale.
- A Blockage Sensor alarm was added to detect if the pop-up wheel sorter failed (a recurring issue at the start of this project).
- Counter Alarms were added, so if too many boxes of one type were detected, the system would stop i.e. to empty the remover.

When any alarm has been activated, a master alarm is set, which stops the system, until the present alarm has been rectified and the alarm reset button has been pressed. When the master alarm has been set, the alarm status turns red, until reset when it turns green, indicating that the system can be started again.

5.0 HMI

5.1 HMI Requirements

Table 5 - HMI Stated Requirements

Stated Requirements	Achieved
HMI Buttons: Start, Stop. Emergency Stop and Reset	Yes
Other HMI Requirements: Counters, Stack Lights, Fault and Warning Screen	Yes
The Warning Screen Requirements: Counter Warning Limit Exceeded	Yes
The Alarm Screen Requirements: Counter Alarm Limit Exceeded	Yes
An Engineering Screen to alter Counter Limits	Yes

5.2 HMI Tag Table and Screenshots

Table 6 - HMI Tag Table

Name	Path	Connection	PLC tag	DataType	Length	Coding
Stop Button	Default tag table	HMI_Connection_1	"Stop Button"	Bool	1	Binary
Start Command	Default tag table	HMI_Connection_1	"Start Command"	Bool	1	Binary
Weight	Default tag table	HMI_Connection_1	Scale	Real	4	IEEE754
Running Warning	Default tag table	HMI_Connection_1	"Run Command"	Bool	1	Binary
Master Alarm	Default tag table	HMI_Connection_1	"Master Alarm"	Bool	1	Binary
Master Alarm Reset	Default tag table	HMI_Connection_1	"Master Reset"	Bool	1	Binary
Extra Small Box Counter (HMI)	Default tag table	HMI_Connection_1	"Extra Small Box Counter"	USInt	1	Binary
Small Box Counter (HMI)	Default tag table	HMI_Connection_1	"Small Box Counter"	USInt	1	Binary
Medium Box Counter (HMI)	Default tag table	HMI_Connection_1	"Medium Box Counter"	USInt	1	Binary
Large Box Counter (HMI)	Default tag table	HMI_Connection_1	"Large Box Counter"	USInt	1	Binary
Warning Reset	Default tag table	HMI_Connection_1	"Warning Reset"	Bool	1	Binary
Start Up Sequence	Default tag table	HMI_Connection_1	Siren	Bool	1	Binary
Weighing	Default tag table	HMI_Connection_1	"Stop Weight Detected"	Bool	1	Binary
Emergency Stop Button Alarm	Default tag table	HMI_Connection_1	"Emergency Stop Button"	Bool	1	Binary
Scale Overweight	Default tag table	HMI_Connection_1	"Scale Over Weight"	Bool	1	Binary
Blockage Sensor	Default tag table	HMI_Connection_1	"Sorter Blocked"	Bool	1	Binary
Emitter Counter	Default tag table	HMI_Connection_1	"Emitter Counter"	USInt	1	Binary
Total Output Counter	Default tag table	HMI_Connection_1	"Total Output Counter"	USInt	1	Binary
HMI Emergency Stop	Default tag table	HMI_Connection_1	"HMI Emergency Stop"	Bool	1	Binary
Emergency Stop Alarm	Default tag table	HMI_Connection_1	"Emergency Stop Alarm"	Bool	1	Binary
Stack Light Green	Default tag table	HMI_Connection_1	"Green Stack Light"	Bool	1	Binary
Warning Stack Light	Default tag table	HMI_Connection_1	"Warning Light"	Bool	1	Binary
Red Stack Light	Default tag table	HMI_Connection_1	"Red Stack Light"	Bool	1	Binary
Extra Small Limit	Default tag table	HMI_Connection_1	"Extra Small limit"	USInt	1	Binary

Small Limit	Default tag table	HMI_Connection_1	"Small Limit"	USInt	1	Binary
Medium Limit	Default tag table	HMI_Connection_1	"Medium limit"	USInt	1	Binary
Large Limit	Default tag table	HMI_Connection_1	"Large Limit"	USInt	1	Binary
Counter Reset ABC	Default tag table	HMI_Connection_1	"Counter Reset ABC"	Bool	1	Binary
Extra Small Limit Exceeded	Default tag table	HMI_Connection_1	"Extra Small Box Limit Exceeded"	Bool	1	Binary
Small Limit Exceeded	Default tag table	HMI_Connection_1	"Small Box Limit Exceeded"	Bool	1	Binary
Medium Limit Exceeded	Default tag table	HMI_Connection_1	"Medium Box Limit Exceeded"	Bool	1	Binary
Large Limit Exceeded	Default tag table	HMI_Connection_1	"Large Box Limit Exceeded"	Bool	1	Binary
Master Counter Exceeded	Default tag table	HMI_Connection_1	"Master Counter Exceeded"	Bool	1	Binary
Counter Warning	Default tag table	HMI_Connection_1	"Counter Warning"	Bool	1	Binary
Extra Small Alarm Limit	Default tag table	HMI_Connection_1	"Extra Small Alarm Limit"	USInt	1	Binary
Small Alarm Limit	Default tag table	HMI_Connection_1	"Small Alarm Limit"	USInt	1	Binary
Medium Alarm Limit	Default tag table	HMI_Connection_1	"Medium Alarm Limit"	USInt	1	Binary
Large Alarm Limit	Default tag table	HMI_Connection_1	"Large Alarm Limit"	USInt	1	Binary

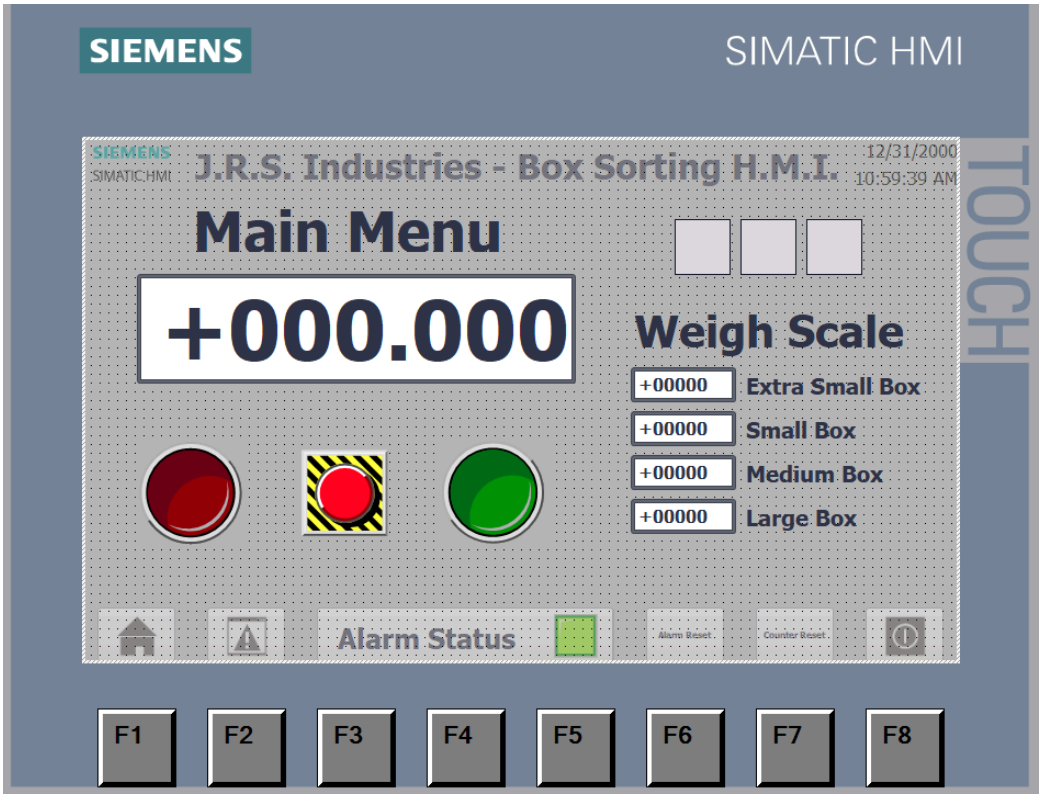

Figure 31 - HMI Main Screen

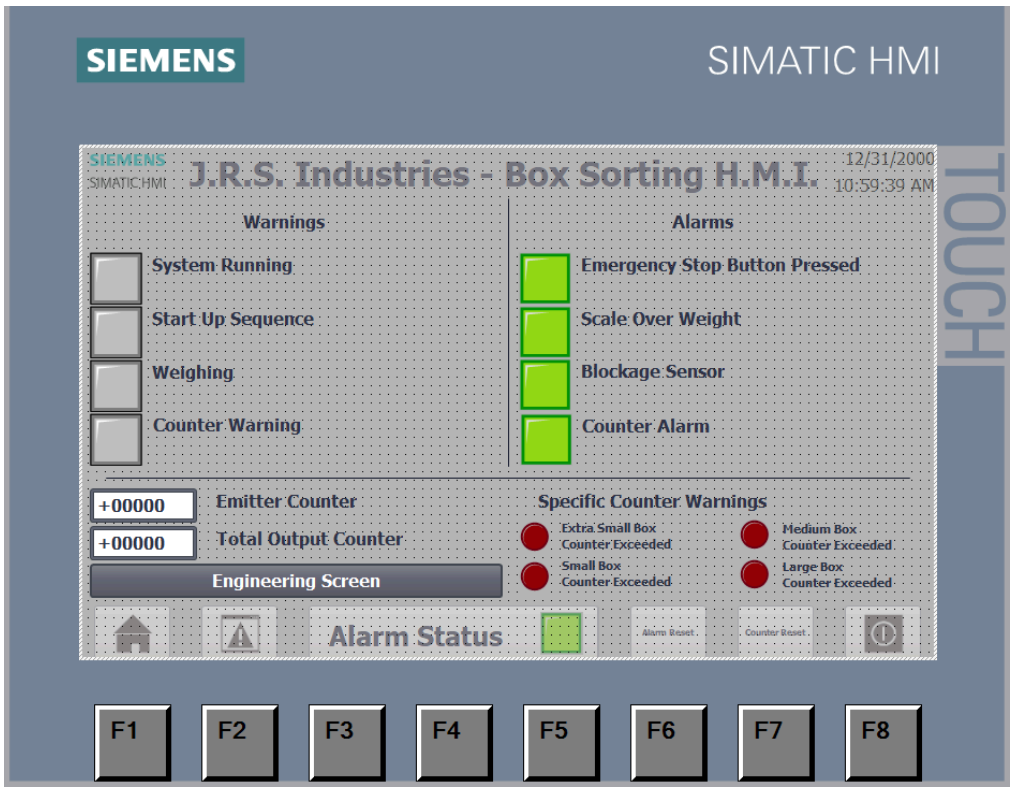

Figure 32 - HMI Warnings and Alarms Screen

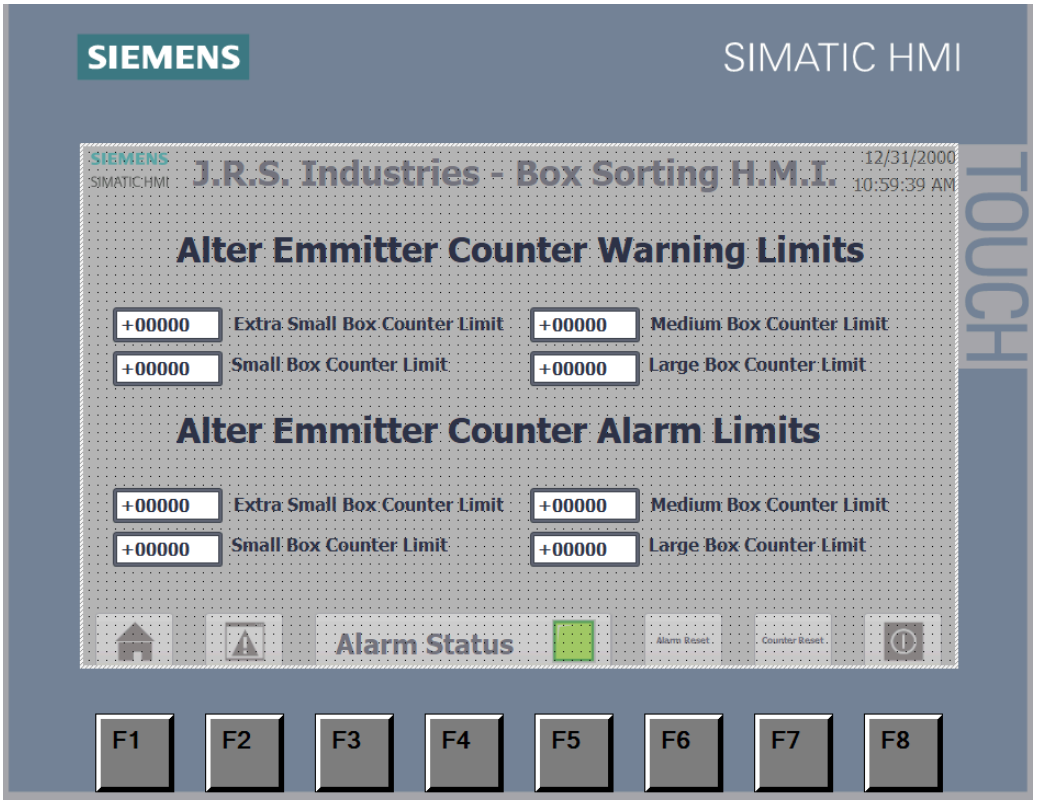

Figure 33 - Engineering Screen

5.3 HMI Description

The HMI has three screens:

The main screen, which allows the system to be started and stopped (assigned to the start and stop button input on the plc), features an estop which activates a flag within the plc when pressed, a mimic of the Stack Lights (assigned to the FactoryIO stack light outputs), the live weight that the scale conveyor is seeing and the value of the box counters.

The warnings and alarms screen shows individual warnings if the system is running, if the system is going through the start-up sequence, if the system is in the weighing sequence and if a counter warning has been exceeded (all of which use flags from the plc). Individual alarms are then shown for whether an Emergency Stop Button is pressed, the scale is overweight, there is a blockage on the pop-up wheel sorter (an issue which repeatedly occurred when prototyping the system) and finally, if any counter alarms have been exceeded.

At the bottom of the warning and alarm screen, there is a section dedicated to counters. Here, the number of emitted boxes is shown, below which is the total number of boxes counted. Specific counter warning lights show which type of box counter is close to the limit of setting an alarm. Finally, there is a button to access the engineering screen.

The engineering screen features symbolic I/O fields to alter the warning Limits and Alarm Limit set point in the PLC program. Typically this screen would be password-protected to prevent operators from altering values without approval.

All screens feature a button to access the main screen and a button to get to the alarm screen, a light which shows the alarm status of the system (green for okay, red for in alarm). Then a reset button for all alarms and another reset button for all counters. There is a final button to stop the HMI.

6.0 Flow Charts

6.1 Factory IO FlowChart

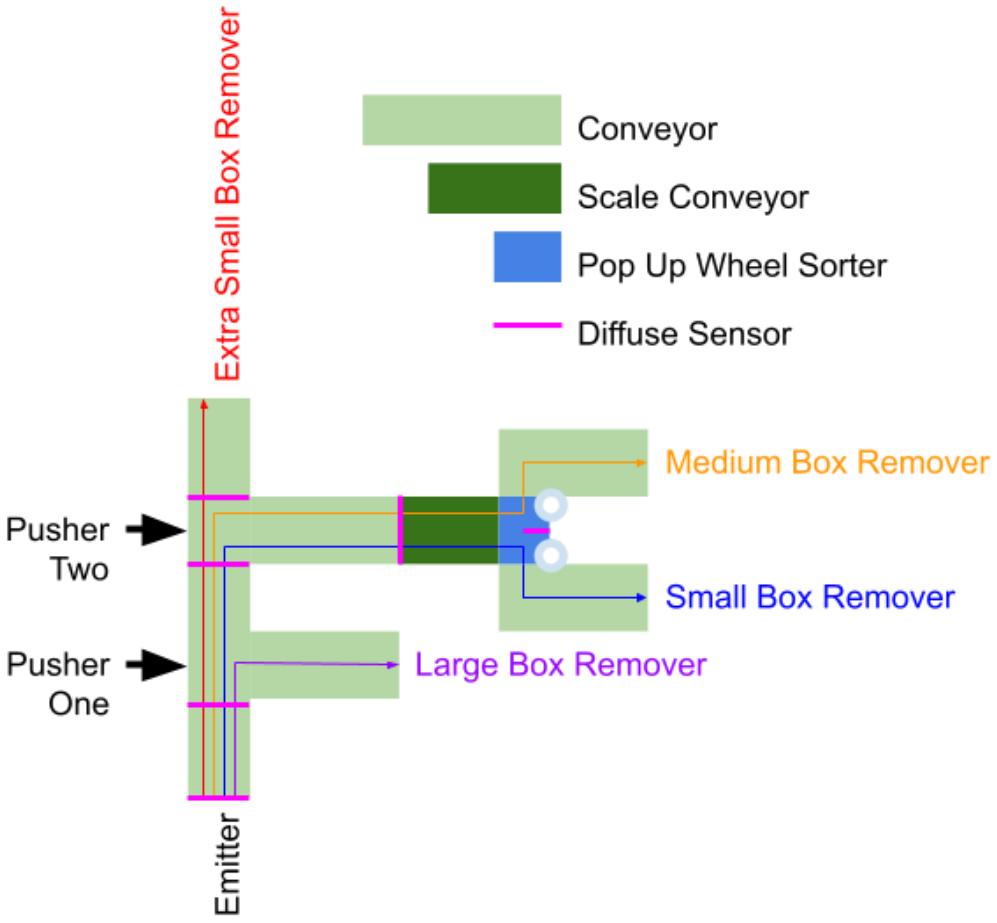

Figure 34 - Factory IO FlowChart

6.2 Sorting Flow Chart

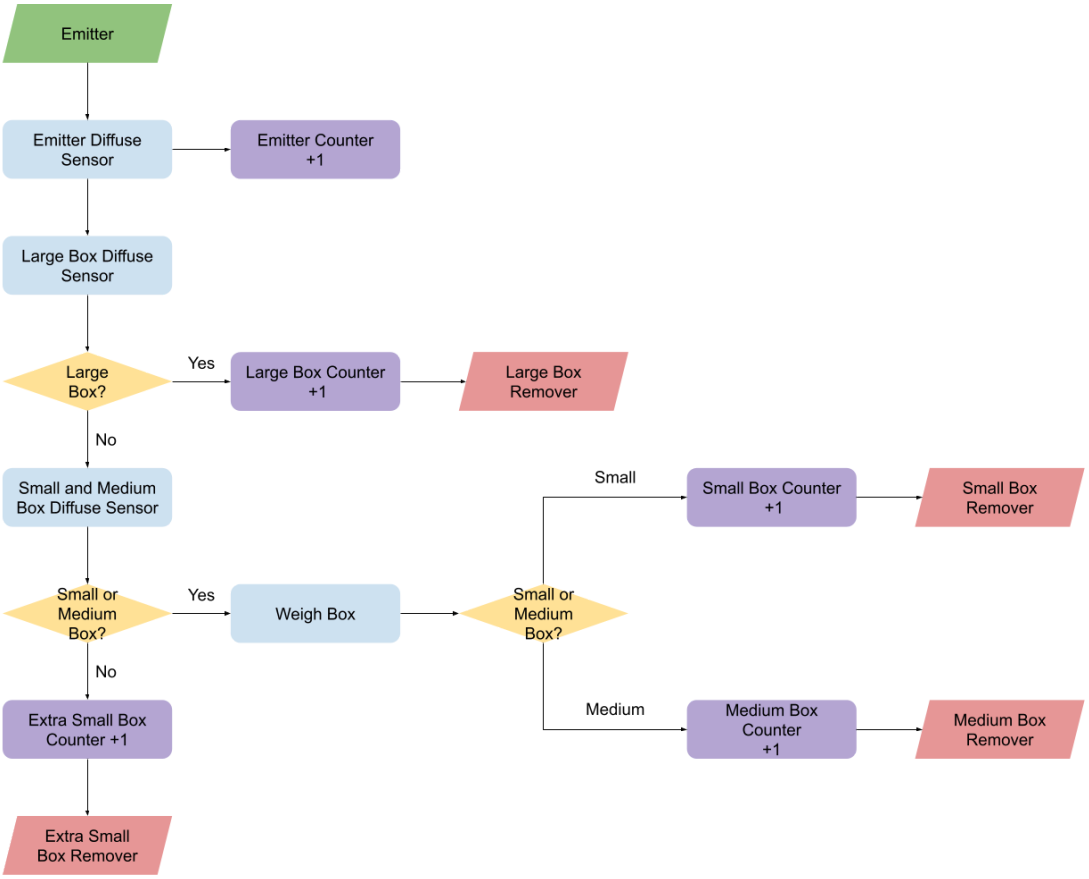

Figure 35 - Sorting FlowChart

6.3 Warnings Flow Chart

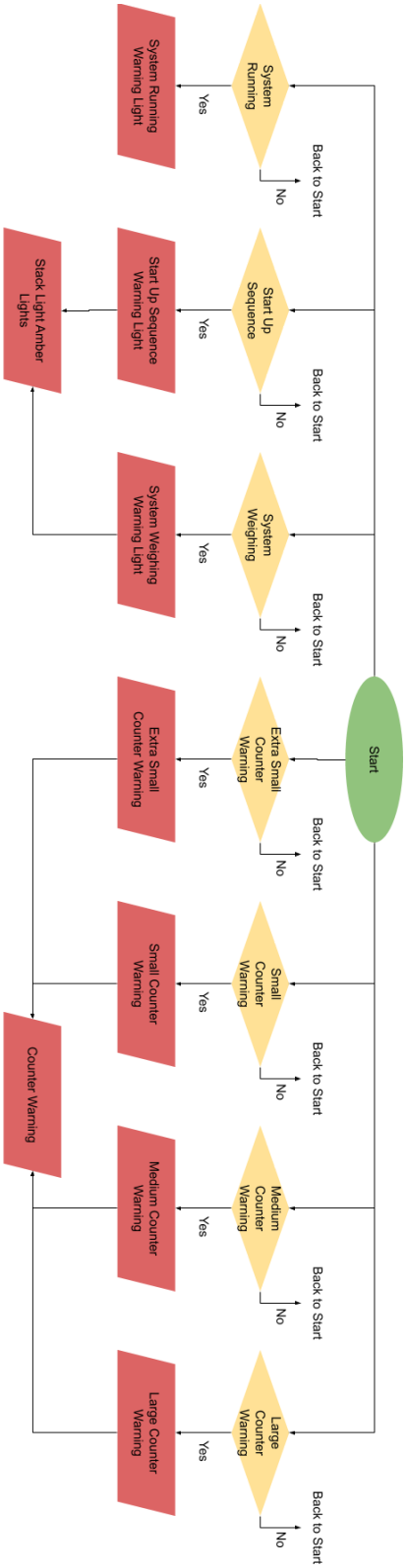

Figure 36 - Warnings FlowChart

6.4 Alarms Flow Chart

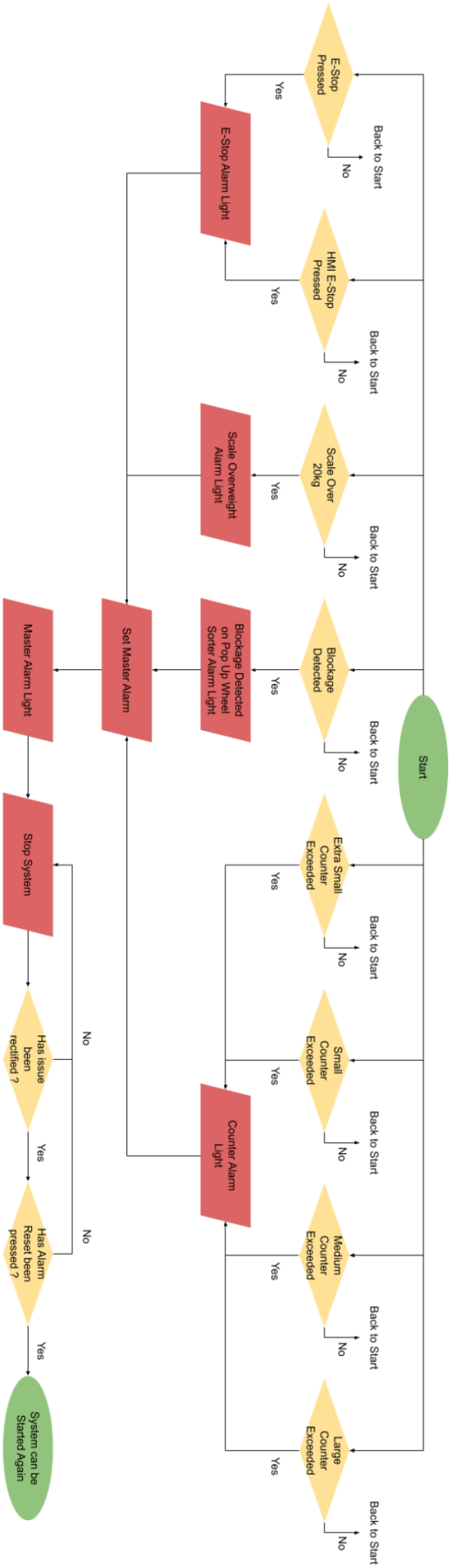

Figure 37 - Alarms FlowChart

7.0 Conclusion and Improvements

This report outlines the steps that contributed to producing a PLC-controlled factory system that sorts four different packages based on size and weight. The system used a range of output devices, such as conveyor belts, pushers, conveyor scales, a siren, a warning light, and two-stack lights, as well as input devices, such as diffuse sensors, emergency stops, and buttons.

Per the requirements, each conveyor was started sequentially to limit the current draw. Alarms were reset using a manual reset and an HMI reset. The HMI included buttons for starting and stopping the system, an E-Stop, a variety of counters with a button to reset all counters, a replication of the stack lights, alarm and warning indicators, and an alarm and warning screen that displays alarms and warnings.

This task offered an opportunity to learn the fundamentals of programming programmable logic controllers using TIA. Using Factory I.O. the system contained multiple inputs and output devices, thus allowing for a better understanding of P.L.C.s.

Overall the task was a success, completed to meet the criteria in the assignment brief, but several improvements could have been made. The most obvious recommendations for this task if completed in the future would be to reduce the size of the system further, reducing cost and factory space. Two easy options would be to remove the curved conveyors and shorten the length of the main conveyor. It would also be possible to reduce the size of the system further using only a scale to sort, combined with three pushes working of timers.

Another issue in the system is that all conveyors are started together after weighing has finished, causing a large initial current draw. If all conveyors were started up like in the start-up sequence, this would take too long, affecting the system's speed. To avoid this, a dropper system could store boxes before being weighed, thus not affecting the rest of the system.

8.0 Appendix

8.1 References

[1]
E. R. Alphonsus and M. O. Abdullah, “A review on the applications of programmable logic controllers (PLCs),” *Renewable and Sustainable Energy Reviews*, vol. 60, pp. 1185–1205, Jul. 2016, doi: https://doi.org/10.1016/j.rser.2016.01.025.
[2]
J. L. Fauci, “PLC or DCS: selection and trends,” *ISA Transactions*, vol. 36, no. 1, pp. 21–28, Jan. 1997, doi: https://doi.org/10.1016/s0019-0578(97)00005-0.
[3]
W. Bolton, *Programmable Logic Controllers.* Cambridge: Elsevier Science, 2015.
[4]
E. A. Parr, *Programmable Controllers*. Elsevier, 2014.
[5]
C. Center, *Guidelines for Safe and Reliable Instrumented Protective Systems*. John Wiley & Sons, 2011.
[6]
Pilz GmbH, “EN 61508: Functional safety of control systems - Pilz GB,” *Pilz.com*, 2024. https://www.pilz.com/en-GB/support/law-standards-norms/functional-safety/en-iec-61508 (accessed Nov. 22, 2024).
[7]
S. P. Tubbs, *Programmable Logic Controller (Plc) Tutorial, Siemens Simatic S7-200.* Gardners Books, 2007.
[8]
OPSWAT Academy, “In-depth Review: Siemens SIMATIC S7-1200 PLC,” *OPSWAT Academy*, Jan. 26, 2024. https://opswatacademy.com/blog/in-depth-review-siemens-simatic-s7-1200-plc (accessed Nov. 22, 2024).
[9]
K. T. Erickson, *Allen-Bradley PLCs : an emphasis on design and application*. Rolla, Mo: Dogwood Valley Press, 2013.
[10]
E. B. Priyanka, C. Maheswari, and S. Thangavel, “Online Monitoring and Control of Flow rate in Oil Pipelines Transportation System by using PLC based Fuzzy-PID Controller,” *Flow Measurement and Instrumentation*, vol. 62, pp. 144–151, Aug. 2018, doi: https://doi.org/10.1016/j.flowmeasinst.2018.02.010.
[11]
J. R. Ridley, *Mitsubishi FX Programmable Logic Controllers : Applications and Programming*. Jordan Hill: Elsevier Science, 2014.
[12]
V. Nagda, “Different Types of Schneider PLC,” *Inst Tools*, Jan. 04, 2022. https://instrumentationtools.com/types-of-schneider-plc/
[13]
DO Supply, “Omron PLC vs Allen Bradley PLC,” *DO Supply*, 2022. https://www.dosupply.com/tech/2022/09/26/omron-plc-vs-allen-bradley-plc/ (accessed Nov. 22, 2024).

[14]
zellusadmin, “The Future of PLC Programming: Trends and Innovations Shaping the Industry,” *R.L. Consulting, Inc.*, Dec. 18, 2023. https://rlconsultinginc.com/the-future-of-plc-programming-trends-and-innovations-shaping-the-industry/ (accessed Nov. 22, 2024).
[15]
Siemens, “SIMATIC S7-300 - Proven multiple times!,” *siemens.com Global Website*. https://www.siemens.com/global/en/products/automation/systems/industrial/plc/simatic-s7-300.html
[16]
Rockwell-Automation, “CompactLogix Control Systems | Allen-Bradley United Kingdom,” *Rockwell Automation*. https://www.rockwellautomation.com/en-gb/products/hardware/allen-bradley/programmable-controllers/small-controllers/compactlogix-family.html
[17]
Mitsubishi, “Features | Programmable Controllers MELSEC (MELSEC-A Series) | Products | MITSUBISHI ELECTRIC Factory Automation,” *Mitsubishielectric.com*, 2014. https://www.mitsubishielectric.com/fa/products/cnt/plca/pmerit/concept/index.html (accessed Nov. 22, 2024).
[18]
Schneider, “Logic Controller - Modicon M221 | Schneider Electric UK,” *Se.com*, 2018. https://www.se.com/uk/en/product-range/62128-logic-controller-modicon-m221/?parent-category-id=3900&parent-subcategory-id=3910&filter=business-1-industrial-automation-and-control#products (accessed Nov. 22, 2024).
[19]
Omron, “CP1H CP series CP1H CPU Unit/Features | OMRON Industrial Automation,” *Omron.com*, 2024. https://www.ia.omron.com/products/family/1778/ (accessed Nov. 22, 2024).
[20]
P. Ferrari, A. Flammini, and S. Vitturi, “Performance analysis of PROFINET networks,” *Computer Standards & Interfaces*, vol. 28, no. 4, pp. 369–385, Apr. 2006, doi: https://doi.org/10.1016/j.csi.2005.03.008.
[21]
K.-H. John and M. Tiegelkamp, IEC 61131–3: Programming Industrial Automation Systems. Springer Science & Business Media, 2013.