motorsport UK

Yearbook 2022

MEMBER OF FIA

Keeping you On Track since 2011

RYAN
MOTORSPORT INSURANCE

10 YEARS

Insurance products available

- Accident damage On Track
- Rally damage On Event
- Storage and transit
- Liability
- Personal accident
- Track day

New automated quote and buy system for Personal accident. Season or single event cover. Log on now for a quote.

- Competitive premiums
- A-Rated Insurers
- Fast claim payments
- Simple quote form
- Bespoke cover
- Knowledgeable staff

Complete an online quote request form at

www.ryanmi.com

Email us: info@ryanmi.com Call us: +44 (0)1799 524202

Ryan Motorsport Insurance Limited is an appointed representative (557405) of Independent Broking Solutions Limited who are authorised and regulated by the Financial Conduct Authority. Its Financial Services registration number is 312026.

The Motorsport UK Yearbook 2022

66th EDITION

ISBN 978 1 912447 08 4

© The contents of this book are copyright and must not be reproduced without the written consent of Motorsport UK Association Ltd.

These regulations become effective 1st January 2022.
This publication supersedes previous editions.

All enquiries concerning motorsport should be addressed to:

Motorsport UK
Bicester, OX27 8FY

Tel: 01753 765000
www.motorsportuk.org

Please note that all calls to and from Motorsport UK are recorded for training and monitoring purposes.

Published by: Motorsport UK Association Ltd
Printed by: Penrose Group, Ashford, Middlesex
Editor: Stuart Haviland
Advertising Manager: Martin Fallon

Contents

Chairman's Message 5

How to use the Blue Book 6

Background to the Sport in Great Britain 8

Part 1: Structure of the Sport

Governance 11

Who's Who at Motorsport UK 16

Regional Structure 20

Motorsport Venues 29

British Championships 44

Part 2: The Regulations

A: National Sporting Code 47

B: Nomenclature and Definitions 52

C: Judicial 68

COMMON REGULATIONS

D: Organisers 78

E: Circuits and Venues 93

F: Emergency and Medical Services (Units and Equipment) 99

G: Officials – Regulations and Licensing 107

H: Competitors: Licences 129

J: Competitors: Vehicles 146

K: Competitors: Safety 166

L: Competitors: Permitted Tyres 212

Contents

SPECIFIC REGULATIONS

M: *Autotests* 221

N: *Autocross and Rallycross* 229

P: *Cross-Country* 245

Q: *Circuit Racing* 285

R: *Rallying* 307

S: *Sprints, Hill Climbs and Drag Racing* 351

T: *Trials* 363

U: *Karting* 377

V: National Records 404

W: Championships 407

Index to the Regulations 435

Part 3: Appendices

1 Competition Fees 415

2 Insurance 419

3 Competing Abroad 425

4 Judicial Notes for Guidance 427

5 Appointed Officials Listings:

- a *Forestry Liaison Officers* 429
- b *Route Liaison Officers* 431
- c *Radio Co-ordinators* 433
- d *Appointed Technical Commissioners* 434
- e *Appointed Environment Inspectors* 434

Motorsport UK Licensed Officials details are available on the Motorsport UK website www.motorsportuk.org

Part 4: Motorsport UK Directory

Motorsports UK Directory 445

Advertisers Index 468

motorsport insurance specialists

On-Track Accident Damage Cover
Motorsport Commercial & Liability
Road Insurance for Rally, Race, Sports, High Performance & Modified Cars
Insurance for Event Organisers
Personal Accident & Travel
Storage & Transit Cover for Non Road Legal Vehicles

0115 965 1020
On-Track Accident Damage
Motorsport Vehicles, Competition and Sports Cars

0115 965 1050
Commercial Policies, Liability Cover and Personal Accident

reis motorsport insurance

www.reis.co.uk
contact@reis.co.uk

Reis Motorsport Insurance is a trading name of Insurance Factory Limited.
Insurance Factory Limited is authorised and regulated by the Financial Conduct Authority (No. 306164).
Registered Office: 45 Westerham Road, Sevenoaks, Kent TN13 2QB.

Looking forward to 2022

2021 was very much a recovery year, driven by our community's strong desire to return to normality as soon as possible. The easing of restrictions allowed us to enjoy the sport we love once again, and fully welcome competitors and spectators back to our venues in a way that had not been possible since 2019.

The momentum of motorsport's recovery has been extraordinary, and I would like to pay tribute to the entire community for the resilience and commitment that has brought us through this unprecedented challenge and made us even stronger together.

One of the positive outcomes of the past couple of years is that it has forced us to implement new solutions with great speed, and I am very pleased that as a sport we are better prepared to embrace new opportunities more rapidly than we could ever have imagined.

Motorsport UK's relocation to Bicester Heritage has been a symbol of our ambition and a catalyst for much of this impetus. Now we are in the heart of 'Motorsport Valley' we have a more relevant home, one that ensures we can become the more dynamic and engaging organisation we envisaged. The new headquarters are already working well as a hub for our community, as we have welcomed hundreds of our members to training days, events and conferences. We have also opened our doors to new audiences visiting Bicester Heritage and we will be announcing a programme of events to ensure that our member groups can benefit from this impressive new facility during the year ahead.

While the pandemic is far from over, motorsport is back on track, and we embark on 2022 with much to look forward to. At the same time, we must address the many issues that have been growing in focus for a number of years and that recent challenges have brought squarely into the spotlight: Environmental and Climate concerns; Health and Safety; Equality, Diversity and Inclusion; and Youth engagement. We face a very different world going forward and we must take action that is considered, yet agile, in order to adapt to this changing environment.

I would like to personally thank you all for your continued support of Motorsport UK, and for being part of our community of over 60,000 competitors, officials, marshals and volunteers.

Please continue to let us know your views in the surveys we carry out through the year. Your feedback is invaluable as Motorsport UK goes about administering, promoting, training, safeguarding, developing and regulating the sport.

My best wishes to you and your families as we look forward to a safe, fair, and fun year ahead.

David Richards CBE
Chair

How to use this Book

All the basic rules governing participation in motorsport events in Britain are contained in this 'Blue Book'. To enjoy the sport to the full, Organisers, Competitors and Officials should ensure they are familiar with the regulations relevant to their own particular discipline.

The Yearbook is split into four main Parts:

Structure of the Sport

The first (RED) Part describes the governance and structure of the sport in Britain, describing the role of Motorsport UK and introducing some of the people involved in the sport, from Council Members to Technical Officials.

The Regulations

The second (BLUE) Part contains the detailed motor sport regulations which are split into two Sections:

- **Common Regulations** effecting all disciplines of the sport from Autotests to Rallying; and
- **Specific Regulations** effecting individual motor sport disciplines, giving Organisational, Competitor and Technical information for each discipline.

Within The Regulations all new regulations are indicated by the use of red text.

The Appendices

These contain much detailed information that has been extracted from the main body of the text in order to make the other Sections more accessible and more readable.

The Directory

The fourth (GREEN) Part includes the regular Motorsport UK Motor Sports Directory advertising products and services from over 180 companies in 100 different categories.

In general it should be possible for readers to find all the relevant Regulations they require by consulting just two sections in the blue part of the book.

As in previous years, a certain amount of cross-referencing between Sections is necessary due to similarities between different disciplines, and because the safety criteria are common to many.

We hope that once you become familiar with the new Blue Book you will find it easy to read and quicker to navigate through. We would welcome all feedback from readers on this revised publication in the hope that we can continue to improve this important motor sport document.

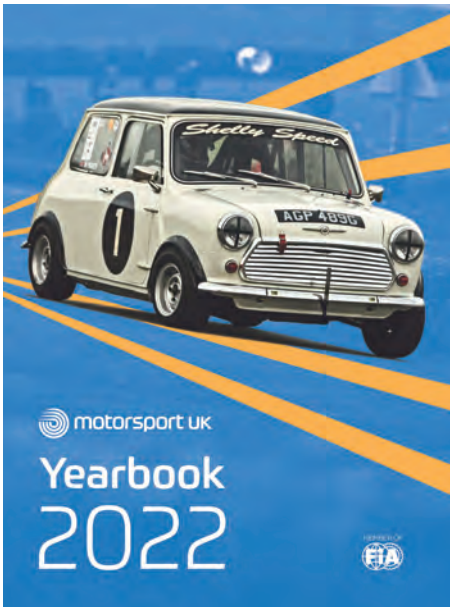

Image: Mathieu Bonnevie

BICESTER
HERITAGE

THE HOME OF HISTORIC MOTORING

bicesterheritage.co.uk

An introduction to Motor Sports

The end of the 19th century saw the establishing and subsequent rapid development of the motor car industry in Britain. From these early years motor clubs sprung up all over the country and for over 100 years these have been the bedrock on which the sport has advanced and prospered, both nationally and internationally.

Britain today remains at the very heart of the international motor sports industry. At a national level, it turns over around £2.9-billion annually and is recognised by Government as a major exporter, generating in excess of £750-million in foreign earnings last year. It offers full-time employment to around 38,000 people (source MIA), and part-time work to a further 100,000.

Involvement at all levels

In sporting terms it involves people at all levels: at grass roots through the activities of 720 Motor Clubs (with a total membership of over 200,000) who annually organise in the region of 4,500 events for 120,000 competitors in 22 different disciplines; at elite level through events such as the British Grand Prix.

The sport is open to all. Events are available for competitors as young as six years old. Others are devoted to women drivers only and there are even opportunities for severely disabled drivers to compete. There are further opportunities for non-drivers to participate as passengers and navigators, or to act as marshals and officials at motor sport events, progressing into areas of scrutineering and timekeeping. On the safety side there are opportunities for first-aiders, doctors and paramedics in rescue and recovery units.

Training and coaching

Throughout the sport, a comprehensive programme of national training and coaching initiatives are in place to develop skill levels whatever the involvement: competitor, official, marshal, medical officer or administrator.

The governance and administration of this hugely successful sport in Britain is today the responsibility of Motorsport UK, with its roots in the Royal Automobile Club that successfully formed and has moulded the sport for over a century.

The sport's governing body

Motorsport UK is authorised by UK Statute to regulate and permit motorsport competitions and is recognised as the governing body of motorsport in Britain by the world governing body, the Federation Internationale de l'Automobile (FIA). As such, Motorsport UK is responsible for administrating and controlling the rules governing the sport.

This Motorsport UK Yearbook, known as the 'Blue Book' and published annually by Motorsport UK, is the sport's regulatory 'Bible' for Organisers, Competitors and Officials.

Part 1:

Structure of the Sport

History of Governance

The spirit of the early British motor clubs continues to drive motorsport organisation and regulation today, with over seven hundred clubs sharing agreed codes of practice under the umbrella of Motorsport UK.

Any successful sport requires sound processes, rules and codes of practice to govern its operation. For motor sport, the history of this governance can be traced back to the turn of the last century when the development of the motor car led to the early formation of a number of motor clubs.

Early history

Prominent amongst these was The Automobile Club of Great Britain & Ireland (later renamed The Royal Automobile Club) which in subsequent years emerged as the leading organisation representing motorists' interests and organising motor sport events. Until the early 1970s motor sport was organised by affiliated clubs overseen by the RAC's Competitions Committee – a body of volunteers who ensured that the sport was conducted safely and to a common set of rules.

These rules were agreed between participating clubs and competitors and ensured that competition was fair. The framework of a judicial system had also by then been put in place and over subsequent years this has evolved into the system in use today (see Part 2: The regulations).

The late 1970s saw a re-structuring of the governance of the sport. In 1975 the Competitions Committee was replaced by a new RAC Motor Sports Council and four years later the RAC Motor Sports Association was formed to look after the day-to-day running of the sport.

Today, the Motor Sports Council informs and advises the Board on key issues, represents the full spectrum of UK motor sport and provides a conduit of information from the market to the governing body, Motorsport UK. The Council's role is also to develop strategic thinking in relation to key issues in the sport and provide direction to the Board as a result.

It is supported by:

- fourteen specialist motorsport committees;
- five specialist motorsport sub-committees and;
- seven advisory groups.

The role of Motorsport UK

Motorsport UK is the ultimate decision-making body responsible for the governance of UK motor sport. It is represented by a Board of directors; professionals who are drawn from both the sport and external disciplines with the required skills and expertise. Its role includes:

- providing strategic leadership of the organisation;
- promoting the long-term success and sustainability of all four-wheel motor sport in the UK, ensuring the sport continues to thrive from thrives and is supported from all continues to be conducted in a fair and safe manner;
- training of Marshals, Officials and Scrutineers;
- overseeing and implementing changes to National Competition Rules and Regulations;
- supporting the rule making and judicial process, ensuring the sport continues to be conducted in a fair and safe manner.

Today over seven hundred motor clubs are registered with Motorsport UK and represent the whole range of motor sport activity, from the grass root amateur to the professional elite.

These activities include circuit car and kart racing, rallying, rallycross, trials, autotests and a number of other disciplines all operating under the Motorsport UK umbrella to ensure fairness, safety and consistency.

At an International level, Motorsport UK is affiliated to the world governing body for four or more wheeled motor sport – the Fédération Internationale de L'Automobile (FIA) – which recognises it as the National Sporting Authority (ASN) in Britain.

International events are regulated under the auspices of the FIA's International Sporting Code which is published in the FIA Yearbook of Automobile Sport.

Motorsport UK itself is a not-for-profit company limited by guarantee, investing any surplus revenue after tax back into the sport. Its main income is generated by issuing competition licenses for participants and permits for motor sport events and Championships. It is based in a new office at Bicester Heritage in the "motorsport valley" corridoor, where some 62 full time staff are employed in all aspects of running motor sport in this country.

In addition to licensing in the region of 39,000 Competitors (many of whom will have attended

motorsport UK

Lifetime Achievement Award

This is the highest honour bestowed by the Motorsport UK Board. It is presented annually to a member of the UK motor sport community in recognition of outstanding achievement over many years in the sport. The award is not limited to competitors or volunteers:

2005	**Tom Delaney**	**2012**	**Ron Smith**	**2017**	**Sir Frank Williams**
2007	**Peter Cooper**	**2013**	**Andy Watson**		**Murray Walker OBE**
2008	**Howard Lapsley**	**2014**	**Len Pullen**	**2021**	**Sir Jackie Stewart**
	Les Needham	**2015**	**David Morley**		**Jimmy McRae**
2009	**Howard Strawford**	**2016**	**Sir Stirling Moss**		**Jonathan Lord**
2011	**Denis Cardell**		**David Butler MBE**		
	Tony Fletcher				

Prince Michael Award of Merit

The Prince Michael Award of Merit is a prestigious personal award made by Motorsport UK to a maximum of two recipients each year in recognition of meritorious service to British motor sport. Meritorious service encompasses distinguished service or significant contribution to British motor sports; outstanding achievement in British motor sports.

Award of Merit Winners

1991	Jack Romain	1997	Alec Rivers Fletcher;	2008	Stuart Turner
1992	Tony Bird		Donald Grieve	2009	David Butler MBE
1993	Peter Cooper;	1998	Michael Fenwick;	2011	Michael Southcombe
	Tony Fletcher		Keith Douglas	2013	Colin Hilton;
1994	John Felix; George Hall	2000	Robert Rae		Ronnie Trouton MBE
1995	Brian Molyneux	2002	Tony Reynolds	2015	Les Needham
1996	Tom Dooley;	2004	Ken Walker	2018	Tony Scott-Andrews
	Dick Newsum	2007	Colin Rossborough	2021	Dr Ian Roberts

Centenary Award of Merit

1997 Professor Sid Watkins

approved driver training schools), Motorsport UK has in the region of 4,000 licensed Officials and 10,000 registered Marshals on its database. It currently issues permits for some 4,700 events each year, carries out safety inspections of around 140 motor sport venues and supports training of an army of volunteer officials.

Nearly 6,000 Marshals and volunteer officials received training last year, funded by the British Motor Sports Training Trust, a registered charity for which Motorsport UK provides Trustees and administration.

Motorsport UK is also a statutory body, authorising the routes of motorsport events on the highway in England and Wales, The Motor Vehicles (Competitions and Trials) Regulations, motorsport events in public places in England, Wales and Scotland, the Motor Vehicles (Off Road Events) Regulations and for motorsport events on closed public roads in England, Wales and Scotland, The Road Traffic Act 1988 Sec 12(1A)

The National Court

The National Court is independent of Motorsport UK as the ASN. Its administration is overseen by an external independent lawyer and it has 5 permanent Chairs, 1 of whom is a retired lawyer, 2 who are practising barristers and 1 Queen's Counsel.

The role of the Court includes its status as the National Court of Appeal under the Code and to exercise judicial powers by applying and interpreting the National Competition Rules (and where appropriate the Code), the National Court Judicial Rules and practice directions.

The British Championships

The British Championships are run annually for each of the motorsport disciplines. These are governed by Motorsport UK Regulations and involve a series of events which take place throughout the year, all under the control of Motorsport UK registered clubs. They culminate in the award of a British Championship Trophy for each discipline, and details of current winners are contained in this book.

The Championships promote and develop excellence in motorsport and enable the best British competitors to reach international competitive standards.

Commercial activities

Motorsport UK undertakes a range of commercial activities to sustain championships and disciplines and develop third party revenue streams to help sustain and grow the sport. These primarily relate to the organisation of championships and events including the British Karting Championships, the British Rally Championship, British Formula 4 and the organisation of the Formula 1 British Grand Prix among other events.

Officiel d'Honneur Appointments

The following have accepted the position of Officiel d'Honneur for 2022:

M F L Allison

G H Bailey

W Beattie

I D Bennie

K N Blackburn

G S B Blythe

H T Chapell

T J Hassall

A Dean-Lewis MBE

R McCabe

N S Manser

J B H Wood

B Wright

P Liddle

Motorsport UK

OPEN
Monday – Friday
9.00–17.00

Tel: 01753 765000

Membership Team:
Tel: 01753 765050

Website:
www.motorsportuk.org

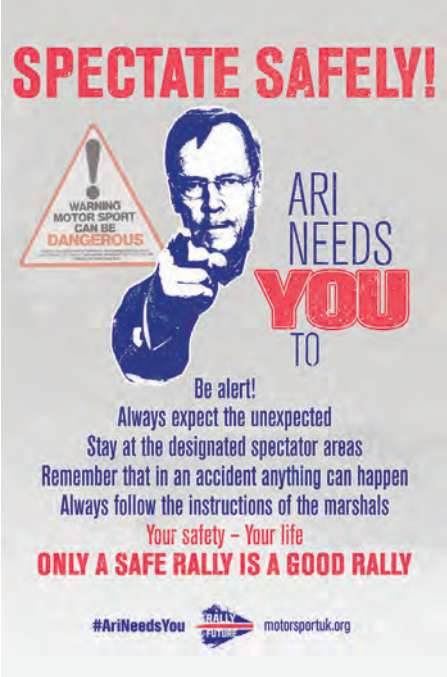

How to promote your event

For many clubs, just running an event for the enjoyment of a close group of competitors and volunteers is what motorsport is all about. However, for those looking to grow their events, some marketing is needed. And the good news is that the basics of event marketing are more straightforward than you might think.

What is event marketing?

Event marketing is about working out who you want to talk to (your audiences), what you want to say to them and ultimately what you want them to do, and then using various tools and channels to reach them.

For example, you might want to reach competitors and encourage them to enter, or volunteers and persuade them to help. Or you might want to get through to businesses and convince them to support your event, or target fans and get them to buy tickets.

OK, we need marketing. What should we do?

You need to create a marketing plan. They are a mix of art and science, so no two plans will be the same. Broadly, though, a motorsport event will need a plan that covers pre-, on- and post-event marketing.

Once you have identified your target audiences and defined your key messages (what you really want them to know about your event, including how they can get involved) you can start on your pre-event marketing.

This might entail creating a webpage about your event, including how to sign up, then sending a press release to local and motorsport media, and running a social media campaign to raise awareness and drive people to your site.

Or you might team up with a locally based business and see how you can support each other – maybe they could offer sponsorship, and in return you could feature their brand in your marketing outputs and invite them to have a presence at your event? They are likely to promote their involvement in your event too, so you will have the added benefit of reaching their own audiences.

With any luck, your pre-event marketing will produce the results you want, and your event will have a bumper entry list, a full complement of marshals and an enthusiastic group of spectators. Now that your audience has come to your front door, do not miss the opportunity to tell them what other events or opportunities you have coming up.

Why not prepare some promotional leaflets letting competitors, volunteers and fans know what else you have to offer, and how and why they should come back to see you again? You could also run a competition for a passenger ride, merchandise or tickets, in order to collect email addresses and grow your contact list.

Your successful pre- and on-event marketing activity should have allowed you to capture lots of contact data for your audiences, so you can reach out to them post-event with a brief look back at your meeting, plus details of what else you have to offer. You will also be starting next year's pre-event communications one step ahead, with all those new customers at your fingertips in your contacts list.

Don't stop – keep growing!

How to write a press release | **See page 79**

Who's Who at Motorsport UK

The Council is largely made up of the Chairs of Motorsport UK's individual committees, as well as Motorsport UK's Chairman and CEO. Its Executive is Motorsport UK, run through a Board of non-executive directors and a full-time executive of some 60 staff. Details of Council members invited to serve these bodies for 2022 are given below.

The Board

Chair:
David Richards CBE

Directors:

- *Helen Bashford-Malkie*
- *Catherine Bond Muir*
- *Hugh Chambers*
- *Karun Chandhok*
- *Chris Cooper*
- *Nicky Moffitt*
- *David Lapworth*
- *Richard Norbury*
- *Tom Purves*
- *Roger Wills*

Company Secretary:

- *Sebastian Bult*

The Executive

Chief Executive Officer:
Hugh Chambers

General Secretary:

- *Sebastian Bult*

Regulatory Counsel and Disciplinary Officer:

- *Jamie Champkin*

Commercial Director:

- *Colin Clark*

Financial Director:

- *Craig Murray*

Sport, Safety and Technical Director:

- *John Ryan*

PA to the CEO:

- *Alison Dowsett*

Head of Sport Promotion:

- *Ian Berry*

Director of Marketing and Communications:

- *Daniel Smith*

Head of People:

- *Matthew Johnson*

Safety Executive:

- *Dan Carter*

Head of Safeguarding:

- *TBA*

Operations Director:

- *Chris Walkingshaw*

Rallies Executive:

- *Iain Tullie*

Competitions & Clubs Manager:

- *Simon Fowler*

Race and Speed Executive:

- *Cheryl Lynch*

Secretary to the Council:

- *Andrea Richards*

Director of Learning and Developments:

- *Sue Sanders*

Membership Services Manager:

- *Michael Wentworth*

The Council

Chair:
Tom Purves

- *Mike Broad*
- *Hugh Chambers*
- *Sandy Denham*
- *Philip Evans*
- *Phil Foster*
- *Dr Sarah Fraser*
- *Alan Gow*
- *Steve Johnson*
- *Lucy Killington*
- *David Lapworth*
- *Nadine Lewis*
- *Ray Linton*
- *Paul McMorran*
- *Nicky Moffitt*
- *Gary Nicholls*
- *Richard Norbury*
- *Jonathan Palmer*
- *Paul Parker*
- *Gwyn Reynolds-Jones*
- *David Richards*

- *George Robinson*
- *Christopher Tate*
- *Dr Paul Trafford*
- *Darren Turner*
- *Paul van Veggal*
- *Ian Watson*
- *Roger Wills*
- *Chris Woodcock*

Autotest Committee

- *Steve Johnson (Chair)*
- *Will Barnes*
- *Mike Biss*
- *Bill Creevy*
- *Nick Darkin*
- *Dave Evans*
- *Malcolm McQueen*
- *Alastair Moffatt*

Cross Country Committee

- *Jon Aston*
- *Richard Banks*
- *Adam Barker*
- *Steve Chambers*
- *Toby Cox*
- *Charles Darby*
- *Andrew Flanders*
- *Rupert Hine*
- *Kevin Peace*
- *Peter Widdop*

Historic Committee

- *Roger Wills (Chair)*
- *David Clark*
- *Graham Couser*
- *Richard Cuene-Grandidier*
- *Andy Dee-Crowne*
- *Phil Foster*
- *Matt Fowle*
- *Martyn Halliday*
- *James Hanson*
- *John Hopwood*
- *Richard Parnell*
- *Christopher Tate*
- *Alan Walker*
- *Guy Woodcock*

Judicial Committee

- *Richard Norbury (Chair)*
- *Peter Daly*
- *William Frain-Bell*
- *Sarah Franklin*
- *Shirley Hennessy*
- *Ken Potter*
- *David Prosser*
- *Peter Roberts*
- *Adrienne Watson*
- *Insurers*

Kart Committee

- *George Robinson (Chair)*
- *Scott Allen*
- *Russell Anderson*
- *Terry Bateman*
- *Gordon Cuthill*
- *Nigel Edwards*
- *Evan Freeman*
- *Paul Fullerton*
- *Dominic Gaynor*
- *Charles Graham*
- *Paula Partridge*
- *Warwick Ringham*
- *Graham Smith*
- *Rod Taylor*
- *John Vigor*
- *Ian Ward*
- *TBA– ABKC Rep*

Kart Technical Advisory Group

- *George Robinson (Chair)*
- *Scott Allen*
- *Russell Anderson*
- *Gerard Cox*
- *John Gravett*
- *Paul Klaassen*
- *Ernie Salmon*
- *Graham Smith*
- *Alan Turney*
- *TBA– ABKC Rep*

Medical Committee

- *Dr Paul Trafford (Chair)*
- *John Atkins*
- *Prof Peter Hutchinson*
- *Dr Nick James*
- *Dr Val Luoma*
- *Dr David McManus*
- *Dr Clare Morden*
- *Dr Steven Ready*
- *Dr Ian Roberts*
- *Dr Sarah Robertshaw*
- *Dr Ben Shippey*
- *Dr Mark Tyler*
- *Dr Eyston Vaughan-Huxley*
- *Dr Jonathan Whelan*

Medical Expert Group

- *Dr Paul Trafford (Chair)*
- *Dr Marc Cohen*
- *Gerry Davis*
- *Dr Naomi Deakin*
- *Dr Mark Green*
- *Dr John Harrington*
- *Dr Steven Huntez*
- *Prof Michael Johnson*
- *Dr Prof Clive Loveday*
- *Dr Ian Maconochi*
- *Dr Tim Moll*
- *Dr Stephen Morley*
- *David Stubbs*
- *Dr Simon Taylor*
- *Sharon Wells*

Race Committee

- *Ian Watson (Chair)*
- *Hannah Brian*
- *Peter Daly*
- *Andy Dee-Crowne*
- *Giles Groombridge*
- *Simon Lambert*
- *Alex Lacey*
- *Nadine Lewis*
- *Jonathan Palmer*
- *Richard Peacock*
- *Peter Riches*
- *Ian Standing*
- *Ben Taylor*
- *Derek Warwick*

Rallies Committee

- *Nicky Moffitt (Chair)*
- *Jon Binns*
- *Gavin Campbell*
- *Roy Campbell*
- *Matt Endean*
- *Dorian Evans*
- *Vic Fancy*
- *Matt Fowle*
- *Paul Gwynne*
- *Sasha Heriot*
- *John Hopwood*
- *Matt Jackson*
- *Osian Price*
- *Sam Spencer*
- *Paul Spooner*
- *Kevin Witton*
- *Chris Woodcock*

Regional Committee

- *John Arnold – AWMMC*
- *Andrew Bisping – ACSMC*
- *Tony Clements – AEMC*
- *Nigel Edwards – ABKC*
- *Phil Foster – EMAMC*
- *John Hickling – ANEMMC*
- *Lock Horsburgh – SAMSC*
- *Liz Jordan – ASEMC*
- *Mark King – ANICCC*
- *Bob Milloy – ANWCC*
- *Paul Parker – ASWMC*
- *Colin Salkeld – ANECCC*
- *Mike Taylor – WAMC*
- *Chris Woodcock – ANCC*

Safety Committee

- *Christopher Tate (Chair)*
- *Ron Cowan*
- *Mike Denyer*
- *Philip Evans*
- *Mike Groves*
- *Nicky Moffitt*
- *Richard Peacock*
- *Graham Smith*
- *Matt Smith*
- *Gary Thompson*
- *Derek Warwick*
- *Charley Webber*

Rescue & Recovery Advisory Group

- *Charley Webber (Chair)*
- *James Bates*
- *Jon Bolton*
- *Philip Bryans*
- *Ian Culbert*
- *Martin Hunt*
- *Andy Lyle*
- *David Stubbs*
- *Stuart Westbrook*

Speed Events Committee

- *Philip Evans (Chair)*
- *Nick Algar*
- *Matt Endean*
- *Darren Prentice*
- *Andy Robinson*
- *Tim Whittington*
- *Tim Wison*

Autocross & Rallycross Sub Committee

- *Matt Endean (Chair)*
- *Colin Anderson*
- *David Bellerby*
- *Jordine Crooks*
- *Pip Davey*
- *Shirley Gibson*
- *Jonathan Olds*
- *Simon Tappin*
- *Tim Whittington*

Dragster Sub Committee

- *Darren Prentice (Chair)*
- *David Brice*
- *Ian Marshall*
- *Mark Norton*
- *Andy Robinson*

Sprint & Hill Climb Sub Committee

- *Nick Algar (Chair)*
- *Bob Adams*
- *Adrian Deane*
- *Graeme Forrester*
- *David Gould*
- *Peter Lawton*
- *Andrew Laurence*
- *Paul Parker*
- *Gemma Price*
- *Caroline Ryder*
- *David Swinton*
- *Rod Warner*
- *Tim Wilson*

Technical Committee

- *David Lapworth (Chair)*
- *Giles Butterfield*
- *Todd Crooks*
- *John Iley*
- *Nigel Jones*
- *Aeron Lloyd*
- *Paul Loveridge*
- *Darren Meadows*
- *Roger Ratley*
- *Gethin Rees*
- *Peter Riches*
- *Mark Way*

Timekeeping Advisory Group

- *Gethin Rees (Chair)*
- *Vaughan Allcock*
- *Richard Blackshaw*
- *Colin Haywood*
- *Peter Locke*
- *Richard Lomax*
- *Gary Nicholls*
- *Ian Rogers*
- *Stephen Taylor*
- *Roger Warren*

Trials Committee

- *TBA (Chair)*
- *Lindsay Burke*
- *Martyn Halliday*
- *Mark Hoppe*
- *Barrie Parker*
- *Lee Peck*
- *Richard Sharp*
- *Duncan Stephens*
- *Andrew Tarring*
- *Josh Veale*
- *Simon Woodall*

Volunteer Official's Committee

- *Nadine Lewis (Chair)*
- *Neil Fuller*
- *Liz Jordan*
- *Brian Hemmings*
- *Duncan McGregor*
- *Gethin Rees*
- *Stuart Taylor*
- *Ian Watson*
- *Stuart Westbrook*

Clerk's & Steward's Advisory Group

- *Neil Fuller (Chair)*
- *Steve Burns*
- *Kevin Dawson*
- *Andrew Holley*
- *Peter Lawton*
- *Ken Potter*
- *Rod Taylor*
- *Dorothy Uwota*

Marshal's Advisory Group

- *Nadine Lewis (Chair)*
- *Jim Bee*
- *Tim Harding*
- *Garry Headridge*
- *John Jones*
- *Simon Parsley*
- *Kalie Plant*
- *Jayne Poston*
- *David Thompson*
- *Sam Walker*

Training Advisory Group

- *Duncan McGregor (Chair)*
- *Andrew Bisping*
- *Julian Burch*
- *Peter Greenhalgh*
- *Ian Jarrett*
- *Lynne Kendall*
- *Duncan Masters*
- *Paul Sirett*

Rules Committee

- *Richard Norbury (Chair)*
- *David Lapworth*
- *Christopher Tate*
- *Nadine Lewis*
- *Roger Wills*
- *Ian Watson*
- *Philip Evans*
- *Steve Johnson*
- *Nicky Moffitt*
- *George Robinson*
- *Paul Trafford*
- *Pete Weall*
- *Duncan Stephens*

Equality, Diversity & Inclusion Committee

- *Catherine Bond Muir (Chair)*
- *Helen Bashford-Malkie*
- *Mike Bugembe*
- *Karun Chandhok*
- *Chris Cooper*
- *Nathalie McGloin*
- *Richard Morris*

Disability & Accessibility Sub Committee

- *Nathalie McGloin (Chair)*
- *Martin Austin*
- *Andrew Bayliss*
- *Richard Egger*
- *Duncan Hopkinson*
- *Kerry Knoesen*
- *Sarah Mogford*
- *James Webley*

LGBTQ+ Sub Committee

- *Richard Morris (Chair)*
- *Ricky Hawkins*
- *Charlie Martin*
- *Rowena Purdy*
- *Ian Sowman*

Racial Diversity Sub Committee

- *Mike Bugembe (Chair)*
- *Peter Alleyne*
- *Sophia Bi*
- *Jahee Campbell-Brennan*
- *Carl Chase*
- *Francis Mensah*
- *Christopher Muwanguzi*
- *Barbara Phillips*

Women in Motorsport Sub Committee

- *Helen Bashford-Malkie*
- *Laura Christmas*
- *Carol Glenn*
- *Georgina Harris*
- *Nadine Lewis*
- *Charlotte Phelps*
- *Alice Powell*
- *Gemma Price*

Sustainability Committee

- *David Lapworth (Chair)*
- *Catherine Bond Muir*
- *Antonio Ciriello*
- *Paddy Lowe*
- *Cristiana Pace*
- *Tom Purves*
- *Roger Ratley*
- *Ben Taylor*
- *Ben Willshire*

UK Representatives at the FIA

Dennis Carter	GT Commission
Terry Cox	Truck Racing Commission
Sue Sanders	Volunteers & Officials, Commission
Philip Evans	Drag Racing Commission
Fred Gallagher	Cross-Country Rally Commission
Edwin Glasgow QC	President International Tribunal
Alan Gow	President Touring Car Commission, FIA Global Institute Executive Committee and FIA Foundation Trustee Endurance Commission
David Grace	Hill-Climb Commission
Cheryl Lynch	Off-Road Commission, Drifting Commission
David Clark	Historic Motor Sport Commission
Dr Paul Trafford	Medical Commission
John Ryan	Homologation Regulations, Single-Seater Commissions, International Karting Commission (CIK)
Tony Scott Andrews	International Court of Appeal
Dan Carter	Circuits Commission
David Tremayne	Land Speed Records Commission
Joe Hickerton	Electric & New Energy Championships Commission
Derek Warwick	Drivers Commission
Colin Hilton	Global Institute for Motor Sport Safety, FIA ASN Development Task Force
Mike Broad	Rally Commission
Dan Carter	Closed Roads Commission
Nathalie McGloin	President Disability and Accessibility Commission
Patrick Head	Safety Commission
Robert Reid	Safety Commission, President Closed Roads Commission
Simon Andrews	Disability and Accessability Commission
Christiana Pace	Environment & Sustainability Commission
Hugh Chambers	Women in Motorsport Commission, Esports Commission

(As at time of publication)

Regional Structure

Motorsport UK provides guidance and support to its member clubs through a network of 13 Regional Associations who act as the first port of call for anyone starting in the sport.

ABKC

Association of British Kart Clubs
Website: www.abkc.org.uk

Secretary: Graham Smith, Stoneycroft, Godsons Lane, Napton, Southam, Warwickshire CV47 8LX
☎ (h) 01926 812 177

Chairman: Nigel Edwards, 4 Grosvenor Close, Retford, Nottinghamshire DN22 7HP
☎ (m) 07883 401 205

Regional Delegate: Nigel Edwards, 4 Grosvenor Close, Retford, Nottinghamshire DN22 7HP
☎ (m) 07883 401 205

ACSMC

Association of Central Southern Motor Clubs
Website: www.acsmc.com

Secretary: TBA
E-mail: secretary@acsmc.com

Co-Chairman & Regional Delegate: Andrew Bisping, Cleeveleys, Lea, Malmesbury, Wiltshire, SN16 9PF
☎ (m) 07804 833737 E-mail: chair@acsmc.com

Co-Chairman Mark Baulch, 53, Earlswood Drive, Alderholt, Fordingbridge, Hampshire, SP6 3EN
☎ (m): 07789 901 341 E-mail: chair@acsmc.com

Championship Co-ordinators

Autocross:	Colin Anderson, 35 Haydons Park, Honiton, Devon EX14 2TA ☎ (h) 01404 41535 E-mail: autocross@aswmc.org.uk
Autosolo:	Peter Cox, 19a Oxford Street, Lambourn, Hungerford, Berks RG17 8XS ☎ (h) 01488 72027 E-mail: autotsolo@acsmc.com
Autotest:	Tony Groves, 41 Grosvenor Road, Kennington, Ashford, Kent TN24 9PA ☎ (m) 07881 288101 E-mail: autotest@acsmc.com
Stage Rallies:	Mark Baulch/Mark Cone, 53, Earlswood Drive, Alderholt, Fordingbridge, Hampshire SP6 3EN ☎ (m) 07789 0901341 E-mail: stagerally@acsmc.com
Speed:	Dave Whyman, 72 Lashmere, Copthorne, Crawley, West Sussex, RH10 3RT ☎ (h) 07831 671 308 E-mail: speed@acsmc.com

OS maps: 173-5, 184-7, (to A23), 195-8 (to A23).

AEMC

Association of Eastern Motor Clubs
Website: www.aemc.org.uk

Chairman: Gary Nicholls, 84 Totnes Walk, Chelmsford, Essex, CM1 6LU
☎ (h) 01245 351 468 ☎ (m) 07895 040 441 E-mail: garyjnicholls@gmail.com

Secretary: Brian Hemmings, 2 Davidson Close, Sudbury, CO10 0YU
☎ (h) 01787 377 480 ☎ (m) 0770 383 0704 E-mail: secretary@aemc.org.uk or bhemmings18@gmail.com

Vice Chairman: Stanley Graham

Treasurer: Chris Musselle

Regional Committee Delegate: Tony Clements

Championship Co-ordinators

Stage Rallies	Paul Barrett ☎ (h) 01245 290 902 ☎ (m) 07771 976 761 E-mail: paulbarrett@chelmsfordmc.co.uk
Speed	Pete Walters, 1 School Lane, Aston, Hertfordshire SG2 7HA ☎ (h) 07831 316236 Email: pete@3arc.com

OS maps: 132, 133, 134, 143, 144, 153-6, 166-9, 178 (North)

ANCC

Association of Northern Car Clubs
Website: www.ancc.co.uk

Secretary: Neil Andrews, Upper Bailey Fold Farm, Allerton, Bradford,
West Yorkshire, BD15 8AA. ☎ (m) 07596 786246 E-mail: neilcandrews@aol.com

Chairman & Regional Delegate: Chris Woodcock, 234 Shear Brow, Blackburn,
Lancashire, BB1 8DS. ☎ (h) 01254 681350 ☎ (m) 07973 830695 E-mail: pdschris@aol.com

Championship Co-ordinators

Stage Rallies:	Chris Woodcock, 234 Shear Brow, Blackburn, Lancashire BB1 8DS ☎ (h) 01254 681350 ☎ (m) 07973 830695 E-mail: pdschris@aol.com
Road Rallies:	Sam Spencer, Rye Cottage, Little Habton, Malton, YO17 6UA ☎ 07740 281223 E-mail: samwspencer@outlook.com
Car Trial:	John Spencer, 43 Cookridge Drive, Cookridge, Leeds LS16 7HP ☎ 01132 677234 E-mail: jrspencer@talk21.com
4x4:	Dave Barker, 2 Huby Banks, Huby, Leeds, West Yorkshire LS17 0AH ☎ 01423 734412 E-mail: davewbarker@virgin.net

OS Maps 97/101, 102/107, Top half of 109, 110/111 (to 120) & 94 (Forests)

ANECCC

Association of North East & Cumbria Car Clubs
Website: www.aneccc.org.uk

Secretary: Ian Dixon, 7 Fir Terrace, Esh Winning, Durham DH7 9JQ
☎ (h) 0191 373 1872 ☎ (m) 07581 685887 E-mail: rede3zero@gmail.com

Assistant Secretary: Anthony Jamieson, 23 Saunton Gardens, The Fairways, Cramlington, Northumberland NE23 8BU
☎ (m) 07809 659505 E-mail: rede3zero@gmail.com

Chair & Regional Delegate: Mr Colin Salkeld, 37 Rickleton Village Centre, Washington, Tyne & Wear, NE38 9ET
☎ (h) 01914 194 909 ☎ (m) 07860 960 489 E-mail: anthony.jamieson@live.co.uk

Championship Co-ordinators
Autotest: Tom Hall ☎ (h) 07946 515848. E-mail: group2fps@btconnect.com

SG Petch ANECCC Stage Rally
Championship: Graham Hall. ☎ (h) 07909 045557. E-mail: hrallydriver@aol.com

A.S. Performance – North of England Tarmac Stage
Championship: Neville Simmons – Championship Manager. ☎ (m) 07889 141828
E-mail: manager@nerallychamp.co.uk

OS maps: 74-5, 79, 80, 85 (all to border); 81, 86, 87, 88, 89, 90, 91, 92, 93, 94 (to 100), 101 (roads only); 96 (West to border)

ANEMMC

Association of North East Midland Motor Clubs
Website: www.anemmc.org

Chairman: Gerry Blythe, Lekeburn, 27 Kenwick Road, Louth LN11 8EH
☎ (h) 01507 606981 E-mail: gerry.blythe@lekeburn.co.uk

Regional Delegate: John Hickling, 18 Philip Avenue, Nuthall, Nottingham, NG16 1EA
☎ (h) 0115 938 4601 E-mail: john.hickling1@ntlworld.com

Championship Co-ordinators
Stage Rallies: John Hickling, 18 Philip Avenue, Nuthall, Nottingham NG16 1EA
☎ (h) 0115 938 4601 E-mail: john.hickling1@ntlworld.com

Road Rallies: Dave Broadley, Woodcot, Snarford Bridge, Welton Hill, Lincoln LN2 3RD
☎ (m) 01673 885684 E-mail: lastminuterallying@hotmail.com

OS maps: 112-3, 121-2, 130-1, 142

ANICC

Association of Northern Ireland Car Clubs
Website: www.anicc.org.uk

Honorary Secretary: Mrs Grace King, 19 Blackberry Lane, Newmills, Co. Tyrone, BT71 4AZ
☎ (h) 028 8774 8087 ☎ (m) 07955 905502 E-mail: gorestown33@live.com

Chairman: Henry Campbell, 138 Dunvale, Ballymena, Co. Antrim BT43 6NZ
☎ (h) 028 2564 6231 ☎ (m) 07801 598525 E-mail: henry@haganhomes.co.uk

Vice-Chairman: Mr Wilson Carson, Glendale, 54 Islandreagh Drive, Dunadry, Co. Antrim, BT41 2HB
☎ (h) 028 9443 3373 ☎ (m) 07831 454031 E-mail: wilson.carson@btinternet.com

Regional Committee Delegate: Mr Mark King, 19 Blackberry Lane, Newmills, Co. Tyrone, BT71 4AZ
☎ (h) 028 8774 8087 ☎ (m) 07598 863273 E-mail: m222kng@live.co.uk

Championship Co-ordinators

Autotests:	Mark King, 19 Blackberry Lane, Newmills, Co. Tyrone, BT71 4AZ ☎ (h) 028 8774 8087 ☎ (m) 07598 863273 E-Mail: m222kng@live.co.uk
Hill Climbs:	Alan Cassells, 18 Croaghan View, Lurgan, Craigavon, Co Armagh BT66 6TL ☎ (m) 075 9515 7794 E-mail: hillclimb@anicc.org.uk
Racing:	Richard Young, 500 Motor Racing Club of Ireland, Kirkistown Race Circuit, Rubane Road, Kircubbin, Co. Down BT22 1AU ☎ (b) 028 4277 1325 E-mail: richard.young@kirkistown.com
Sprints :	David Evans. ☎ (m) 079 6827 8648 E-mail: davidevans1982@tiscali.co.uk
Motorsprt UK NI Stage Rally:	Bob McKeown, 22 Annaghone Road, Stewartstown, Co Tyrone BT71 5PH ☎ (m) 078 6625 3696 E-mail: bobmckeown@gmail.com

OS maps: 1 – 29

ANWCC

Association of North Western Car Clubs
Website: www.anwcc.co.uk

Secretary: Mark Wilkinson. ☎ (m) 07879 657 580 E-mail: secretary@anwcc.co.uk

Chairman & Regional Delegate: Bob Milloy, Laburnum Cottage, Hincaster, Milnthorpe, Cumbria LA7 7ND
☎ (h) 01539 560773 ☎ (m) 07880 612 298 E-mail: milloybob@yahoo.co.uk

Championship Co-ordinator:
Dave Thomas, 11 Maes Canol, Llandudno Junction LL31 9UX
☎ (h) 01492 584872 ☎ (m) 07788 995345 E-mail: anwcc@talktalk.net

OS maps: 108 & Southern Half 109, Eastern Half 115, 116-8

ASEMC

Association of South Eastern Motor Clubs
Website: www.asemc.org.uk

Secretary: Joshua Bennett, 9 Cheriton Place, Folkestone, Kent CT20 2AY
☎ (m) 07708 066731 Email: josh.b123@hotmail.co.uk

Chairman & Regional Delegate: Liz Jordan, 1 Saxons, Blackhouse Lane, Little Cornard, Sudbury, Suffolk CO10 0NL
☎ (m) (h) 01787 311903 ☎ (m) (m) 07860 668866 E-mail: liz@pcs-support.com

Treasurer: Jane Burgess, Foxdene, Hollywood Lane, West Kingsdown, Kent TN15 6JG
☎ (h) 07710 243039 E-mail: jane_b19@hotmail.com

Webmaster: Josh Bennett E-mail: : josh.b123@hotmail.co.uk

Championship Co-ordinators:

Autosolo:	Andy Kilby, 4 Kings Avenue, Rochester, Kent ME1 3DS ☎ (h) 01634 936722 ☎ (m) 07770 993906 Email: andrewkilby74@gmail.com
Autotest:	Peter Cox, 19A Oxford Street, Lambourn, Berks RG17 8XS ☎ (h) 01488 72027 ☎ (m) 07713 608302 E-mail: peter@the-coxes.com
Car Trial:	Roger Ashby, 328, Hempstead Road, Hempstead, Gillingham, Kent ME7 3QJ ☎ (h) 01634 388014 Email: templeton19@btinternet.com
Speed:	Pete Walters, 1 School Lane, Aston, Hertfordshire SG2 7HA ☎ (m) 07831 316236 E-mail: pete@3arc.com
Stage Rally:	Paul Barrett, 3 Prykes Drive, Chelmsford, Essex CM1 1TP ☎ (h) 01245 290902 ☎ (m) 07771 976761 E-mail: paulbarrett@chelmsfordmc.co.uk
2020:	Dave Clark, 36A Lewis Road, Istead Rise, Gravesend, DA13 9JG ☎ (h) 01474 833 496 ☎ (m) 0796 627 833 E-mail: daveclark1949@btinternet.com

OS maps: 177 (South half), 178 (South half), 179, 187, 188, 198 (East of A23), 199

ASWMC

Association of South Western Motor Clubs
Website: www.aswmc.org.uk

Secretary: Jim Bee, 26 Riverdale Orchard, Seaton, Devon, EX12 2RG
☎ (h) 01297 624 341 ☎ (m) 07986 813 461 E-mail: secretary@aswmc.org.uk or jimbee253@gmail.com

Chairman & Regional Delegate: Paul Parker, 52 Brendon Road, Portishead, Bristol BS20 6DH
☎ (h) 01275 843478 ☎ (m) 07710 516 758 E-mail: chairman@aswmc.org.uk or britishsprint@gmail.com

Vice Chairman: Howard West, Letaba, 2 Sellers Close, Colyford, Devon, EX24 6PB
☎ (h) 01297 551 375 E-mail: vice.chairman@aswmc.org.uk

Championship Co-ordinators

Autocross:	Colin Anderson, 35 Haydons Park, Honiton, Devon EX14 2TA ☎ (h) 01404 41535 ☎ (m) 07813 769213 E-mail: autocross@aswmc.org.uk
Hillclimbs & Sprints:	Roy Sims, Rohan, Totnes Road, Ipplepen, Newton Abbott, Devon TQ12 5TN ☎ (h) 01803 813703 E-mail: speed@aswmc.org.uk
Navigational & Targa Rallies	Gavin Rogers, Camp Farm, Elberton, Olveston, Bristol, BS35 4AQ ☎ (h) 07733 234942 or 01454 414128 E-mail: navigationalrally@aswmc.org.uk
Stage Rallies:	Vic Fancy, 5 Robin Close, Broadway, Weymouth, Dorset DT3 5SG ☎ (m) 07836 389728 E-mail: stagerally@aswmc.org.uk
Autosolo:	Phil Turner, South View, Quarry Road, Frenchay, Bristol BS16 1LX ☎ (h) 01179 701594. E-mail: autosolo@aswmc.org.uk
Classic Trials:	Mrs Carlie Hart, Tile Barn, Church Road, Doynton, Bristol BS30 5SU ☎ (h) 0117 9372611 E-mail: classictrials@aswmc.org.uk
Car Trials:	Mark Hoppe, 24 Westridge Park, Sherbourne, Dorset DT9 6AW ☎ (m) 07967 646086 E-mail: trials@aswmc.org.uk
Sporting Trials:	Duncan Stephens, 'Ty Gwyn', Coxpark, Gunnislake, Cornwall PL18 9BB ☎ (h) 07801 281053 E-mail: sporting@aswmc.org.uk

OS Maps: 172, 180-3, 190-4, 200-4

AWMMC

Association of West Midland Motor Clubs
Website: www.awmmc.org.uk

Secretary: John Arnold, 'Canalside', Longdon Wharf, Longdon-upon-Tern, Shropshire TF6 6LQ
☎ (h) 01952 770211 E-mail: arnold211@btinternet.com

Chairman and Treasurer: Kevin Witton, 56 Harper Avenue, Wednesfield, Wolverhampton, West Midlands, WV11 1HA
☎ (h) 07767 453664 E-mail: kevin.witton@rallyonline.co.uk

Vice Chairman: John Jones, 6 Hallfield Close, Twycross, Atherstone CV9 3SA
☎ (h) 07766 723066 E-mail: johnjones10@btconnect.com

Training Officer: Ian Jarrett, 105 Trench Road, Telford, Shropshire TF2 6PL
☎ (h) 01952 604005 723066 E-mail: jarretti@btinternet.com

Championship Co-ordinators

Single Venue: Matthew Walk, 5 Hardwick Drive, Halesowen, West Midlands B62 8TF
☎ (h) 07769 700656 Email: matt_walk94@hotmail.co.uk

John Jones, 6 Hallfield Close, Twycross, Atherstone CV9 3SA
☎ (h) 07766 723066 Email: johnjones10@btconnect.com

Car Trial: Mark Hoppe ☎ (m) 07395 029090 Email: johnjones10@btconnect.com

OS maps: 126, 137, 139, 149, 152, 162, 163 (all to Dyke), 164 (West half), 127, 138, 150

EMAMC

East Midlands Association of Motor Clubs
Website: www.emamc.org.uk E-mail: info@emamc.org.uk

Secretary: David James, Flat 8, 37 Lamplugh Road, Bridlington, East Yorkshire YO15 2JU
☎ (h) 01262 606420 E-mail: info@emamc.org.uk

Chairman & Regional Delegate: Phil Foster, Halfacre, Kettlethorpe Road, Fenton, Lincoln LN1 2ER
☎ (h) 01427 718601 ☎ (w) 01522 836053
E-mail: philfost@lineone.net

Championship Co-ordinators

Stage Rally: Paul Rees, 1 Sherwood Rise, Mansfield Woodhouse, Nottinghamshire, NG19 7NP
☎ (h) 01623 404114 E-mail: paul@rallymarshal.co.uk

Road Rally: Craig Burgess, 41 Highfield Avenue, Chesterfield, Derbyshire S41 7AU
☎ (h) 01246 222249 E-mail: craigburgess@lechler.com

Autosolo/PCA Lee Burgess 45 Lilac Street, Hollingwood, Chesterfield, S43 2JB
☎ (m) 07971 673222 E-mail: chairman@mid-derbyshiremc.co.uk

OS maps: 119, 120, 128, 129, 140, 141, 152

SAMSC

Scottish Association Of Motor Sports Clubs
Website: www.scottishmotorsportsclubs.co.uk
E-mail: secretary@scottishmotorsportsclubs.co.uk

Secretary & Regional Delegate: Lock Horsburgh, 32 Cowal Crescent, Glenrothes, KY6 3PT
☎ (h) 01592 744723 ☎ (m) 07579 048763 E-mail: lock@scottishmotorsportsclubs.co.uk

Chairman & Regional Delegate: Peter Weall,
☎ (h) 0141 7752949 ☎ (m) 07985 356046 E-mail: peterweall@scottishmotorsportsclubs.co.uk

Championship Co-ordinators

Training:	Rupert Hine ☎ (h) 01577 840458 ☎ (m) 07711 619322 Email: training@scottishmotorsportsclubs.co.uk
Calendar:	Raymond Mann ☎ (h) 01592 264517 ☎ (m) 07925 872939 E-mail: rca.mann@btinternet.com
Marshals	Stewart Paton ☎ (m) 07704 440 867 E-mail: dspaton@hotmail.co.uk
Autotest:	Bill Creevy ☎ (m) 07740 374458 Email: Bill.Creevy@btinternet.com
Off Road:	Graham Rieu-Clarke ☎ (m) 07793 840 288 E-mail: vulture2recovery@outlook.com
Race:	Steve Burns, ☎ (m) 07701 004694 E-mail: sj.burns@hotmail.co.uk
Road Events:	Dave MacKintosh ☎ (h) 01224 784780 ☎ (m) 07715 177296 E-mail: dave@newtonhillhr.co.uk
Stage Rally SRC:	Roy Campbell ☎ (m) 07484 740505 E-mail: r174campbell@btinternet.com
Stage Rally STRC:	Trix Grant E-mail: trixgrant@hotmail.com
Stage Rally Junior 1000 Ecosse Challenge:	Ian McRae ☎ (m) 07975 586065 E-mail: ian_mcrae@btinternet.com

OS Maps (Scotland) 1 – 79, 80 to border, 82 – 84, 85 to border

WAMC

The Welsh Association of Motor Clubs
Website: www.wamc.org.uk

Chairman: Paul Loveridge, 157 High Street, Cinderford, Glos GL14 2TF
☎ (h) 07831 656472 E-mail: Paul@plmotorsport.co.uk

Secretary: Rebecca Richards, Salerno 13, Greenway Avenue, Rumney, Cardiff, CF3 3H0
☎ 07748 452650 Email: wamc.secretary@gmailcom or rebeccaevans39@yahoo.co.uk

Regional Committee Representative: c/o Secretary.

Championship Co-ordinators

Club Championship:	Jimmy Jones, Maes Yr Awel, Vachelich, St Davids, Pembs SA62 6QL ☎ 01437 720 766 E-mail: wamc.clubmans@wamc.org.uk
Motorsport UK National Forest Stage Rally:	Dave Evison, 21 Fernhill Lane, Gobowen, Oswestry, SY11 3PP ☎ 01691 679786 E-mail: wamc.national@wamc.org.uk
Sprint & Hillclimb:	Elen Worthington,Tynton Farm, Pontyberem, Llanelli, Carmarthenshire, SA15 5LP ☎ 01269 845 596 E-mail: wamc.sprint@wamc.org.uk
Road Rally:	John Surridge, 76 Maes-Ty-Canol, Baglan, Port Talbot, West Glam, SA12 8UP ☎ 01639 822 049 E-mail: wamc.road@wamc.org.uk
Tarmacadam Rally & King of Epynt:	Fran Davies, Brynfedwen Garage, Carmel, Carmathenshire, SA14 7TH ☎ 01269 832 889 E-mail: wamc.tarmac@wamc.org.uk
Historic Rally:	Rob Baldwin, 75 Sandown Drive, Bobblestock, Hereford, HR4 9TB ☎ 01432 267 040 E-mail: wamc.historic@wamc.org.uk
Junior Challenge:	Sara Williams. E-mail: wamc.junior@wamc.org.uk
Car Trials Championship:	Emyr Hall. E-mail: wamc.trial@wamc.org.uk

OS maps: 114-5, 123-6, 135-7, 145-8, 157-62, 170, 171 (to Dyke)

PUBLICATIONS, TECHNICAL PAPERS & CLUB EQUIPMENT

Subject to their availability the products and their prices listed below are correct at the time of going to press, but may be changed without further notice.

PUBLICATIONS (VAT zero rated)

Motorsport UK Yearbook £35.00
Motorsport UK Karting Yearbook £19.00

CLUB EQUIPMENT (VAT standard rated incl.)

Club Membership cards ..... 200 for £28.00
Signing-On Sheets – Competitors/Officials ..... FOC available on website
Signing-On Sheets – Media ..... FOC available on website
"Prohibited Area" rigid PVC warning signs ..... per pack of 5 £60.00
"Motor Sports Can Be Dangerous" rigid PVC warning sign ..... per pack of 5 £60.00

COMPETITORS EQUIPMENT (VAT standard rated incl.)

Motorsport UK Helmet Approval Sticker £2.50
Motorsport UK FHR Approval Sticker £2.50

TECHNICAL PAPERS (VAT zero rated, except † = standard rate)

Motorsport UK Rollcage Certificate – Official Copy ..... ‡each £30.00
Motorsport UK Historic Rally Vehicle Identity Form Registration ..... ‡£100.00
Motorsport UK Vehicle Passport (payable to Inspecting Scrutineer) £45.00
FIA Historic Technical Passport Application (excluding Registrars Fee) ... *‡each £408.00
FIA Current Homologation Papers for any UK car ..... ‡each £56.00
FIA Current Homologation Papers for any non UK car ..... ‡Price on application
FIA Lapsed Homologation Papers ..... ‡each £47.00
FIA Lapsed Homologation Papers for pre-1995 cars ..... ‡each £32.00

‡ Overseas orders are subject to an additional delivery charge.
* Excluding FIA fee.

For the above items, please address order(s) to:

Sales Team, Motorsport UK, Bicester OX27 8FY

Purchase online from www.motorsportuk.org

Motorsport Venues

The following venues have previously been issued with a Motorsport UK Track Licence which is issued subject to the conditions incorporated within that licence. That licence is only valid for such periods when a valid Motorsport UK organising permit is in force.

Race Circuits

ANGLESEY CIRCUIT/TRAC MÔN

Address: Anglesey Circuit, Ty Croes, Anglesey LL63 5TF.
Telephone: 01407 811400.
Website: angleseycircuit.com
Email: admin@angleseycircuit.com
Location: Between Aberffraw and Rhosneigr off the A4080.

Length: (A) International: 2.10 miles (3.38 km)
(B) Coastal: 1.55 miles (2.49 km)
(C) National: 1.20 miles (1.93 km)
(D) Club: 0.80 miles (1.29 km)

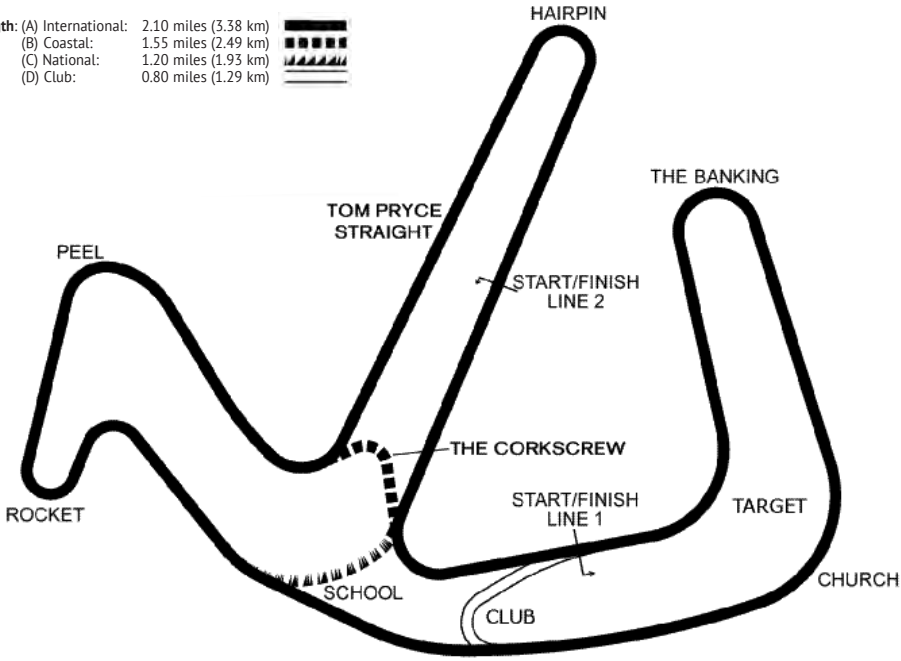

Number of starters	(A)	(B)	(C)	(D)
Racing & Sports Racing Cars over 2000cc	18	–	18	–
Racing & Sports Racing Cars up to 2000cc	34	28	26	14
Other Classes	42	34	30	20

BISHOPSCOURT CIRCUIT

Address: Bishopscourt Circuit, 29 Lismore Road, Bishopscourt, Downpatrick BT30 7SY.
Telephone: 028 4484 2202.
Website: bishopscourt.org
Email: brandshatch@msv.com
Location: Between Bishops Court and Ballyhoman off Lismore Road.
Length: (A) 2.14 miles (3.45 km).
(B) 1.83 miles (2.95 km).

Number of starters	(B)
Racing & Sports Racing Cars	26
Other Classes	32

BRANDS HATCH

Address: Brands Hatch Circuit, Fawkham, Longfield, Kent DA3 8NG.
Telephone: 01474 872331.
Website: brandshatch.co.uk
Email: brandshatch@msv.com
Location: South-east of London, near Farningham, Kent. London–Maidstone Road between A20 and M20, 3 miles from M25 Swanley Interchange.
Length: (A) 2.433 miles (3.916 km).
(B) 1.208 miles (1.944 km).

Number of starters	(A)	(B)
Racing & Sports Racing Cars over 2000cc	32	26
Racing & Sports Racing Cars up to 2000cc	38	30
Other Classes	46	34

CADWELL PARK

Address: Cadwell Park Circuit, Louth, Lincolnshire LN11 9SE.
Telephone: 01507 343248.
Website: cadwellpark.co.uk
Email: cadwellpark@msv.com
Location: 6 miles south of Louth on A153.
Length:
(A) Full Circuit 2.187 miles (3.519 km).
(B) Club Circuit 1.476 miles (2.375 km).
(C) Woodland Circuit 0.850 miles (1.367 km).

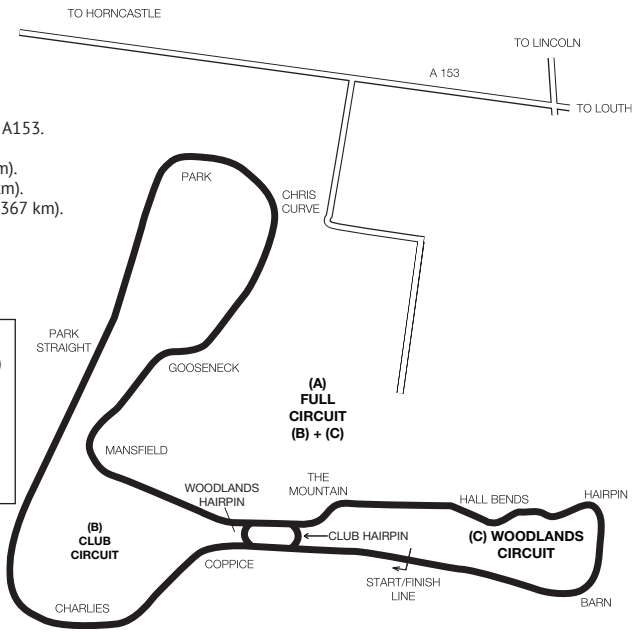

Number of starters

	(A)	(B)	(C)
Racing & Sports Racing Cars not exceeding 2000cc	30	20	16
Other Classes	34	24	18

CASTLE COMBE

Address: Castle Combe Circuit, Chippenham, Wiltshire SN14 7EY.
Telephone: 01249 782417. Fax: 01249 782392.
Website: castlecombecircuit.co.uk
Location: 5 miles north-west of Chippenham, Wiltshire.
Length: 1.85 miles (2.98 km).

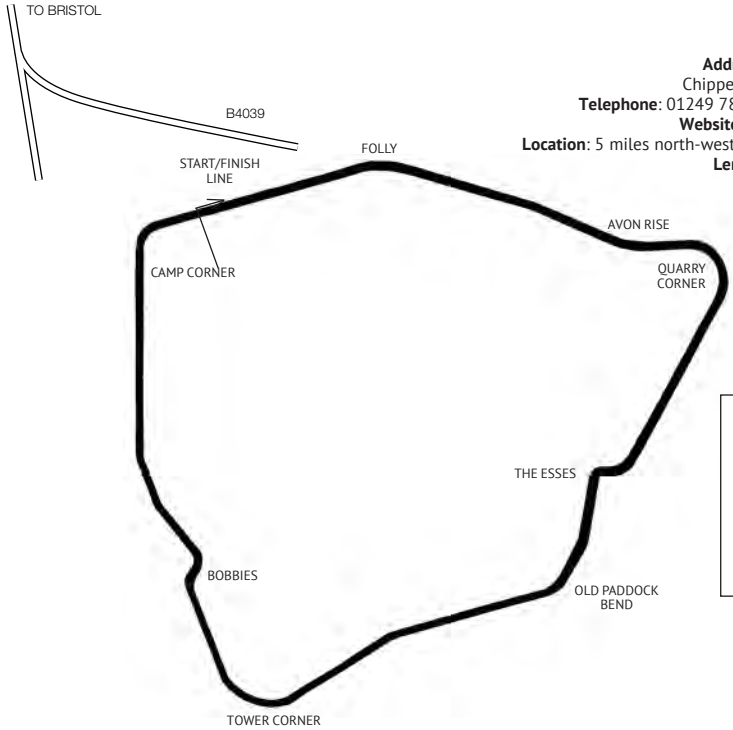

Number of starters

Racing & Sports Racing Cars over 2000cc	30
Racing & Sports Racing Cars up to 2000cc	34
Other Classes	42

CROFT CIRCUIT

Address: Croft Circuit, West Lane, Dalton-on-Tees, North Yorkshire DL2 2PL.
Telephone: 01325 721815.
Website:.croftcircuit.co.uk
Email:.info@croftcircuit.co.uk
Situation: 6 miles south of Darlington on A167.
Length: (A + B) Full: 2.1 miles (3.38 km). (A) Clervaux: 1 mile (1.61 km)

Number of starters	
	(A)+(B)
Racing & Sports Racing Cars over 2000cc	28
Racing & Sports Racing Cars up to 2000cc	32
Other Classes	40

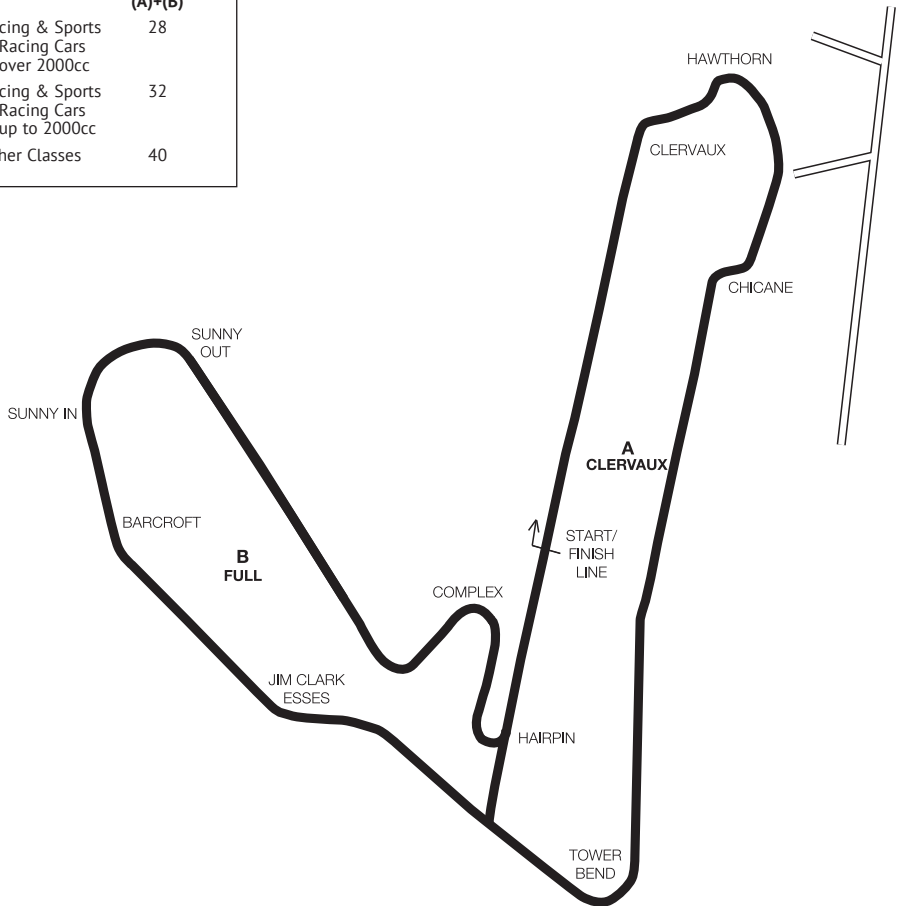

PUBLICATIONS, TECHNICAL PAPERS & CLUB EQUIPMENT

Subject to their availability the products and their prices listed below are correct at the time of going to press, but may be changed without further notice.

PUBLICATIONS (VAT zero rated)

Motorsport UK Yearbook £35.00
Motorsport UK Karting Yearbook £19.00

CLUB EQUIPMENT (VAT standard rated incl.)

Club Membership cards ..... 200 for £28.00
Signing-On Sheets – Competitors/Officials ..... FOC available on website
Signing-On Sheets – Media ..... FOC available on website
"Prohibited Area" rigid PVC warning signs ..... per pack of 5 £60.00
"Motor Sports Can Be Dangerous" rigid PVC warning sign ..... per pack of 5 £60.00

COMPETITORS EQUIPMENT (VAT standard rated incl.)

Motorsport UK Helmet Approval Sticker £2.50
Motorsport UK FHR Approval Sticker £2.50

TECHNICAL PAPERS (VAT zero rated, except † = standard rate)

Motorsport UK Rollcage Certificate – Official Copy ..... ‡each £30.00
Motorsport UK Historic Rally Vehicle Identity Form Registration ..... ‡£100.00
Motorsport UK Vehicle Passport (payable to Inspecting Scrutineer) £45.00
FIA Historic Technical Passport Application (excluding Registrars Fee) ... *‡each £408.00
FIA Current Homologation Papers for any UK car ..... ‡each £56.00
FIA Current Homologation Papers for any non UK car ..... ‡Price on application
FIA Lapsed Homologation Papers ..... ‡each £47.00
FIA Lapsed Homologation Papers for pre-1995 cars ..... ‡each £32.00

‡ Overseas orders are subject to an additional delivery charge.
* Excluding FIA fee.

For the above items, please address order(s) to:

Sales Team, Motorsport UK, Bicester OX27 8FY

Purchase online from www.motorsportuk.org

DONINGTON PARK

Address: Donington Park, Castle Donington, Derby DE74 2RP.
Telephone: 01332 810048.
Email: info@donington-park.co.uk
Website: donington-park.co.uk
Location: 8 miles south-east of Derby; 3 miles junction 23a (northbound) or junction 24 (southbound) on M1; 2 miles from M42/A42 and from A50, turn-off S. P. Donington.
Length: (A) National 1.98 miles (3.185 km). (B) Grand Prix 2.49 miles (4.003 km).

Number of starters

	(A)	(B)
Racing & Sports Racing Cars over 2000cc	30	32
Racing & Sports Racing Cars up to 2000cc	32	36
Other Classes	40	42

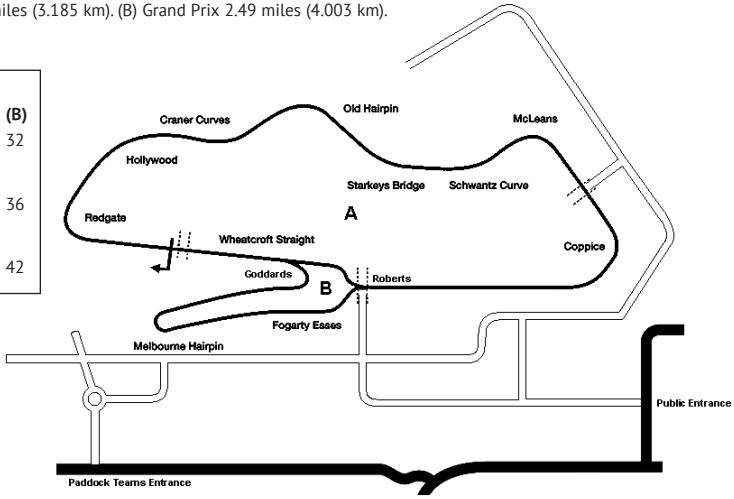

GOODWOOD

Address: Goodwood Motor Circuit, Goodwood, Chichester, West Sussex PO18 0PH.
Telephone: 01243 755073.
Location: 2 miles north-east of Chichester, West Sussex.
Length: 2.38 miles (3.83 km).
Number of starters: 30. (Historic racing).

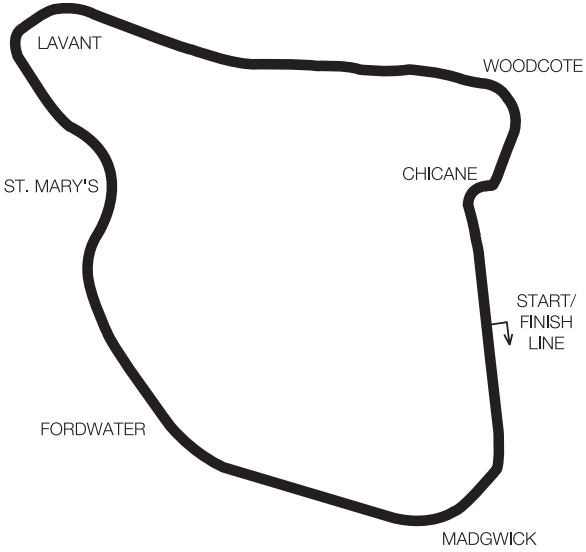

KIRKISTOWN

Address: Kirkistown Motor Sports Circuit, 130 Rubane Road, Kircubbin, Co. Down BT22 1AU.
Telephone: 028 427 71325.
Fax: 028 427 71894.
Website: kirkistown.com
Email: info@kirkistown.com
Location: 27 miles from Belfast on Ards Peninsula between Kirkcubbin (4 miles) and Portavogie.
Length: 1.53 miles (2.462 km).

Number of starters	
Racing & Sports Racing Cars over 2000cc	22
Racing & Sports Racing Cars up to 2000cc	26
Other Classes	32

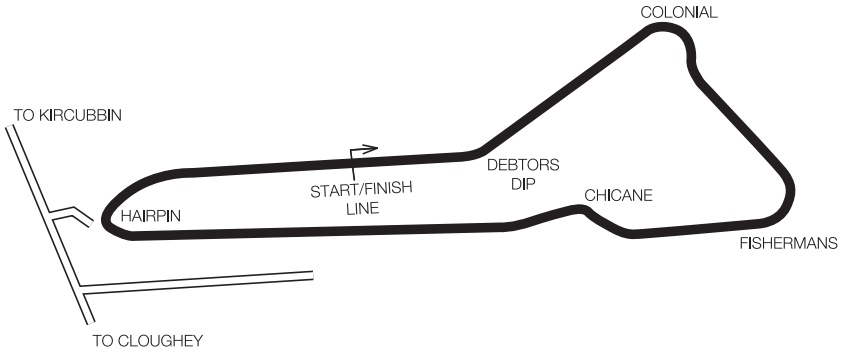

KNOCKHILL

Address: Knockhill Racing Circuit, by Dunfermline, Fife KY12 9TF.
Telephone: 01383 723337.
Website: knockhill.co.uk
Email: enquiries@knockhill.co.uk
Location: 5 miles north of Dunfermline on the A823.
Length: (A) 1.1 miles (1.82 km) (SHORT)
(B) 1.3 miles (2.09 km) (FULL)

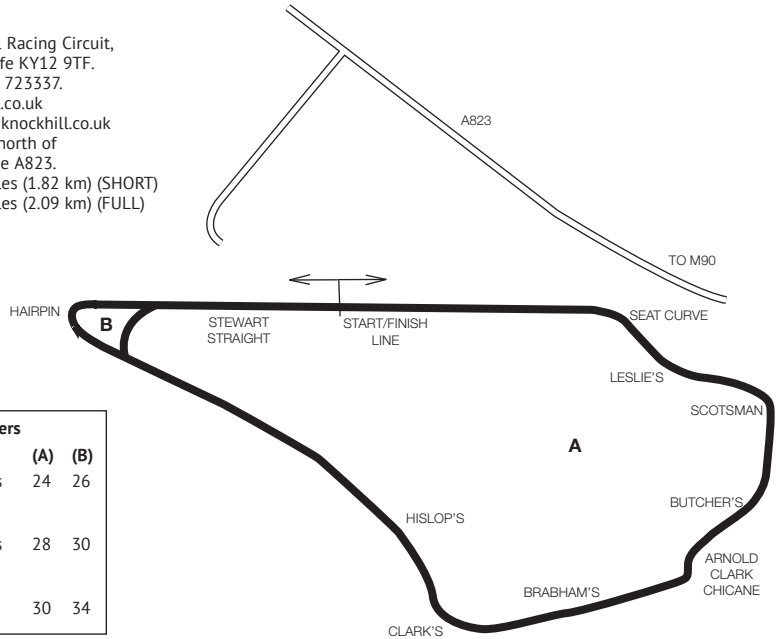

Number of starters	(A)	(B)
Racing & Sports Racing Cars over 2000cc	24	26
Racing & Sports Racing Cars up to 2000cc	28	30
Other Classes	30	34

LYDDEN

Address: Lydden Hill Race Circuit, Wotton. Canterbury, Kent CT4 6ET
Telephone: 01304 830557 or 831714.
Website: lyddenhill.co.uk
Email: info@lyddenhill.co.uk
Location: 7 miles south-east of Canterbury,
off main A2 London–Dover, midway between Canterbury and Dover.
Length: (A) 1 mile (1.609 km). (B) 0.75 miles (1.207 km)

Number of starters

	(A)	(B)
Racing & Sports Racing Cars	21	12
Other Classes	24	16

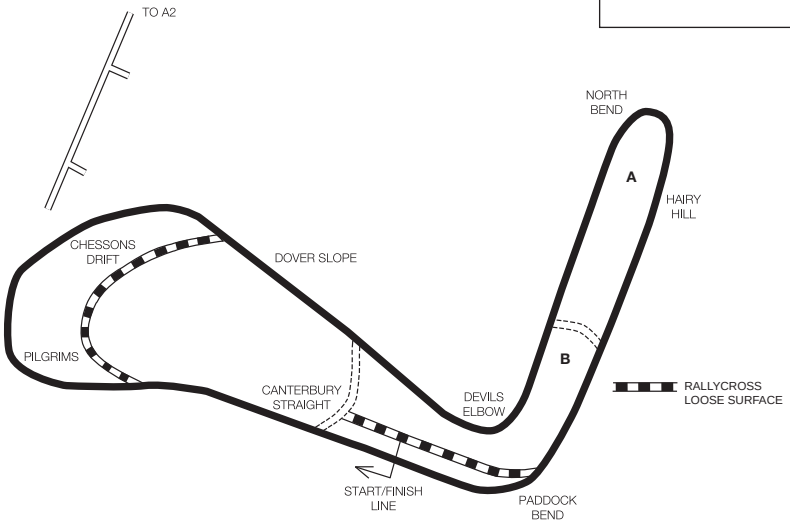

MALLORY PARK

Address: Mallory Park Circuit, Kirkby Mallory,
Leicester LE9 7QE.
Telephone: 01455 502214.
Website: malloryparkcircuit.com
Location: Just off A47 between Leicester and Hinckley.
Length: (A) 1.35 miles (2.17 km). (B) 1.00 mile (1.61 km)

Number of starters

	(A)	(B)
Racing & Sports Racing Cars over 2000cc	20	N/A
Racing & Sports Racing Cars up to 2000cc	24	N/A
Other Classes	30	30

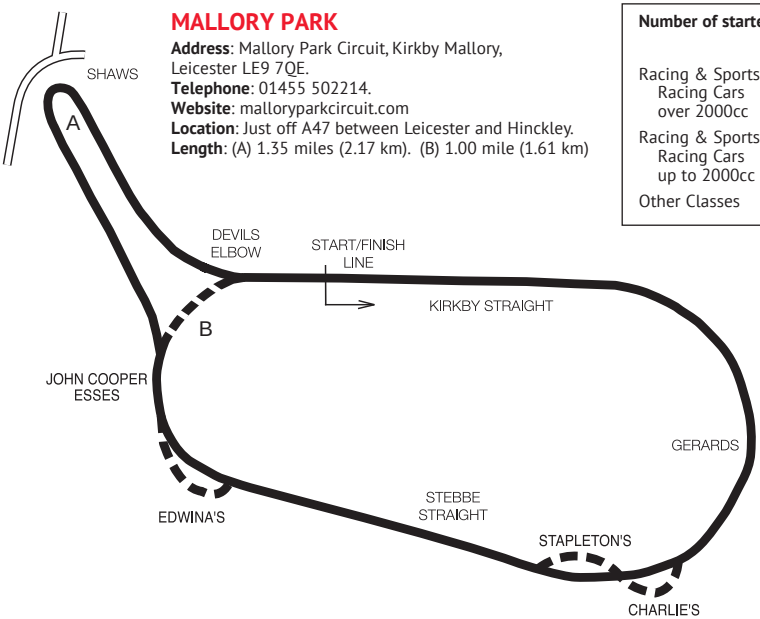

OULTON PARK

Address: Oulton Park Circuit, Little Budworth, Tarporley, Cheshire CW6 9BW.
Telephone: 01829 760301.
Website: motorsportvision.co.uk
Email: oultonpark@msv.com
Location: Three miles north-east of Tarporley, Cheshire, off A49.
Length: (A) 2.69 miles (4.33 km).
(B) 2.26 miles (3.64 km).
(C) 1.66 miles (2.67 km).

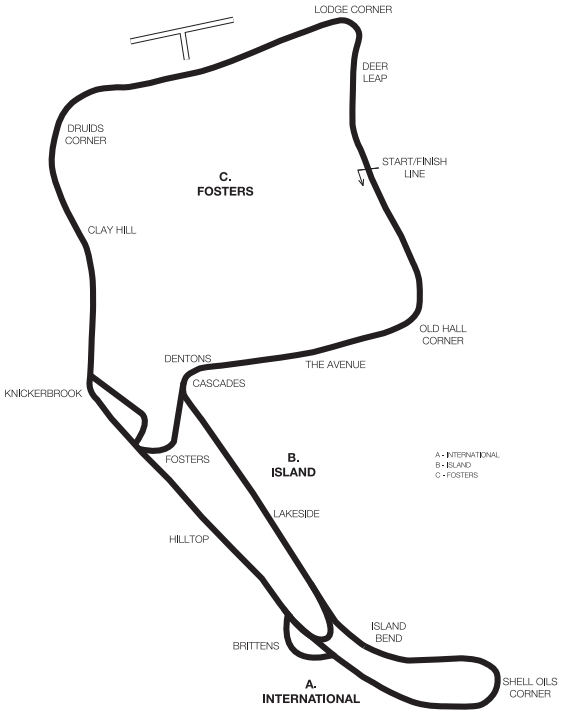

Number of starters

	(A)	(B)	(C)
Racing & Sports Racing Cars over 2000cc	32	30	24
Racing & Sports Racing Cars up to 2000cc	34	32	28
Other Classes	38	36	32

PEMBREY CIRCUIT

Address: Pembrey Circuit, Llanelli, Carmarthenshire, SA16 0HZ.
Telephone: 01554 891042.
Website: pembreycircuit.co.uk
Email: pembrey@barc.net
Location: 10 miles off junction 48 west of M4.
Length: (A) NATIONAL 1.46 miles (2.343 km).
(B) CLUBMANS 1.49 miles (2.400 km).

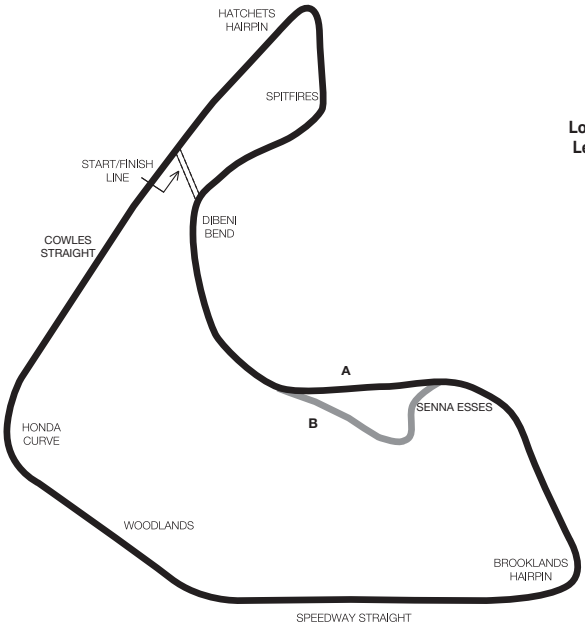

Number of starters

	(A)	(B)
Racing & Sports Racing Cars over 2000cc	24	24
Racing & Sports Racing Cars up to 2000cc	30	30
Other Classes	34	34

SILVERSTONE

Address: Silverstone Circuits Ltd, Silverstone, Northants NN12 8TN.
Telephone: 01327 320280.
Website: silverstone.co.uk
Email: enquiries@silverstone.co.uk
Location: 600 yards from Silverstone
between Towcester and Brackley on A43 – accessible by this and Buckingham Road via Dadford.
Length: (A) 3.67 miles (5.90 km). (B) 1.85 miles (2.98 km). (C) 1.64 miles (2.64 km).

Number of starters	(A)	(B)	(C)
Racing & Sports Racing Cars over 2000cc	50	36	34
Racing & Sports Racing Cars up to 2000cc	54	38	36
Other Classes	61	44	40

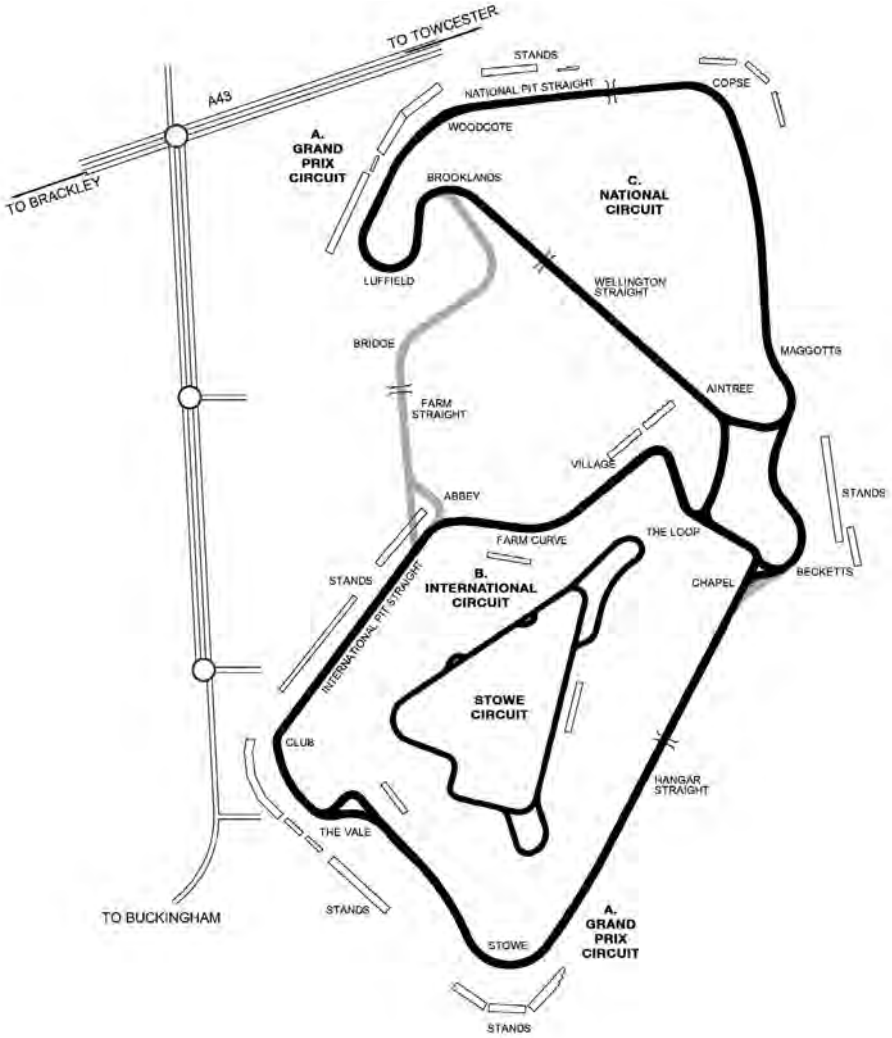

SNETTERTON CIRCUIT

Address: Snetterton Circuit, Norwich, Norfolk NR16 2JU.
Telephone: 01953 887303.
Website: snetterton.co.uk
Email: snetterton@msv.com
Location: On A11 London–Norwich Road, 90 miles from London, 19 miles from Norwich.
Length: (A) 2 miles (3.19 km);
(C) 3 miles (4.78 km).

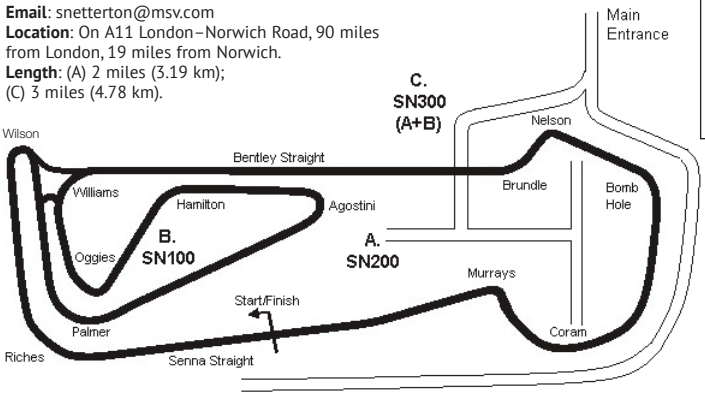

Number of starters	(A)	(C)
Racing & Sports Racing Cars over 2000cc	28	33
Racing & Sports Racing Cars up to 2000cc	32	38
Other Classes	38	45

THRUXTON CIRCUIT

Address: Thruxton Circuit, Andover, Hampshire SP11 8PN.
Telephone: 01264 882222.
Website: thruxtonracing.co.uk
E-mail: info@thruxtonracing.co.uk
Location: 5 miles west of Andover on the A303.
Length: 2.35 miles (3.79 km).

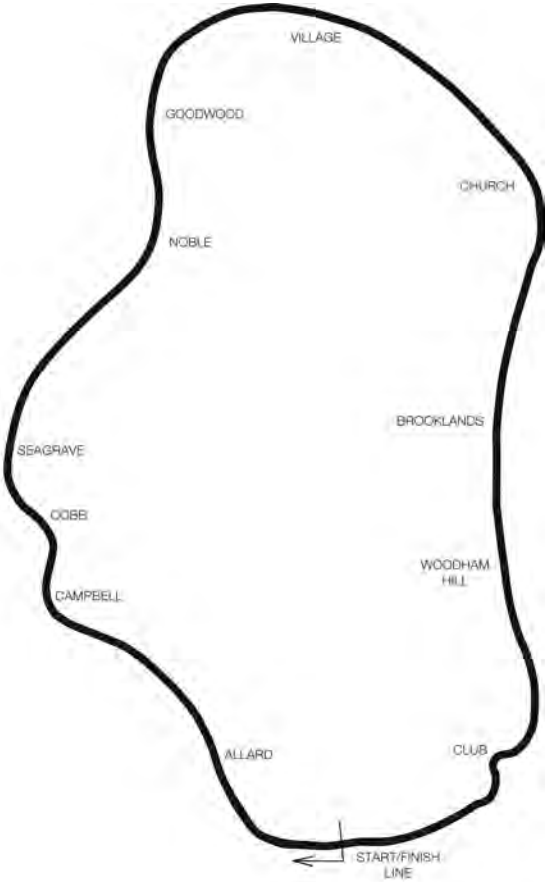

Number of starters	
Racing & Sports Racing Cars over 2000cc	28
Racing & Sports Racing Cars up to 2000cc	36
Other Classes	42

Speed Venues

HILL CLIMB

Barbon Manor (Cumbria) (0.672 km)
SD 630824. 2.5 miles North-East of Kirkby Lonsdale, off A683.
Bo'ness (Falkirk) (0.529 km)
NS 974802. Off A904 Grangemouth Road.
Bouley Bay (Jersey) (0.91 km)
On North-East coast, 5 miles North of St. Helier.
Cairncastle (Co. Antrim) (2.65 km)
D 355076 (N. Ireland). 6 miles North of Larne, off B148.
Castle Hill (Cornwall) (0.75 km)
SX 098618. 2 miles North of Lostwithiel, off A390.
Craigantlet (Co. Down) (1.33 km)
J 396751 (N. Ireland). 4 miles East of Belfast centre, off B170.
Creg Willey's Hill Climb (Isle of Man) (2.243 km)
SC 287837. Glen Helen. On A3, 3 miles East of Peel.
Croft (Co. Down) (0.845 km)
J 420784 (N. Ireland). Creighton's Green. 1.5 miles South-East of Holywood, off B170 or A2.
Doune (Stirling) (1.35 km)
NN 716029. 1.5 miles West of Doune, off A84 to Callander.
Drumhorc Hills (Co. Down) (0.95 km)
J 089482 (N. Ireland). 4 miles North-West of Banbridge, South of A50.
Eagles Rock (Co. Londonderry) (1.9 km)
C 701328 (N. Ireland). 5 miles West of Coleraine, off A2.
Epynt (Powys) (1.65 km)
SN 872299. Sennybridge training area. 1 mile North-West of Trecastle, off A40.
Fintray House (Grampian) (0.611 km)
NJ 855165. 8.5 miles North-West of Aberdeen. Off B977 from Dyce/Kintore or B979 from Blackburn.
Forrestburn (Lanarkshire) (1.03 km)
NS 861649. 10 miles East of Airdrie, off A89.
Fort Tourgis (Alderney) (0.85 km)
0.5 miles from St. Anne, 0.5 miles from Bray Harbour.
Garron Point (Co. Antrim) (1.287 km)
D 293249 (N. Ireland). 4 miles North of Carnlough, off A2.
Goodwood House (W. Sussex) (1.867 km)
SU 886088. 2 miles North-East of Chichester between A285 and A286..
Greve de L'Ecq (Jersey) (1.075 km)
8 miles North-West of St. Helier.
Gurston Down (Wiltshire) (0.967 km)
SU 025255. 1 mile West of Broad Chalke off A354 from Salisbury at Coombe Bissett.
Harewood (W. Yorkshire) (1.448 or 0.996 km)
SE 336453. 7.5 miles North-North-East of Leeds. Take A61 to, then A659.
Imperial Hill Climb (Guernsey) (0.62 km)
Torteval, on South-West point of the Island.
Knockagh (Co. Antrim) (1.25 km)
J 388885 (N. Ireland). Knockagh Road, West of Carrickfergus.
Le Grand Val (Alderney) (0.55 km)
Le Grand Val, Alderney, Channel Islands.
Lhergy Frissell (Isle of Man) (2.374 km)
SC 449935. On A18 South-West of Ramsey.
Loton Park (Shropshire) (1.349 km)
SJ 358143. 8.5 miles West of Shrewsbury. Take A458 then B4393.
Manor Farm Charmouth (Devon) (0.7 km)
SY 367938. 3 miles North-East of Lyme Regis, off A35.
Mont Pinel (Jersey) (0.7 km)
0.5 miles east of L'Etacq.
Mount Bingham (Jersey) (0.591 km)
In St. Helier.
Petit Bot (Guernsey) (0.769 km)
5 miles South-West of St. Peter Port.

Prescott (Gloucestershire) (0.804 or 1.035 km)
SO 983296. 5 miles North-North-East of Cheltenham, off A435.
Scammonden Dam (W. Yorkshire) (0.56 km)
SE 056166. Adjacent to M62. 5 miles West of Huddersfield, off A640.
Shelsley Walsh (Worcestershire) (0.914 km)
SO 721631. 10 miles North-West of Worcester, off B4204.
Spamount (Co. Tyrone) (1.2 km)
H 294827 (N. Ireland). Drumnabey Road, 12 miles North-West of Omagh.
The Sloc (Isle of Man) (1.7 km)
SC 217734. 4 miles North-North-East of Port Erin.
Tregrehan (Cornwall) (0.6 km)
SX 052532. 3 miles East of St. Austell, off A390.
Val des Terres (Guernsey) (0.777 km)
South of St. Peter Port centre.
Watergate Bay (Cornwall) (0.7 km)
SW 842650. 3 miles North North-East of Newquay.
Werrington Park (Cornwall) (1.14 km)
SX 323862. 1 mile North of Launceston, off B3254.
Westmount Road (Jersey) (0.637 km)
People's Park, St. Helier.
Wiscombe Park (Devon) (0.914 km)
SY 182941. 6 miles South of Honiton, 12 miles West of Lyme Regis, off A375 or A3052.

SPRINT

Aintree (Merseyside) (1.847 km)
SJ 377985. 5 miles North of Liverpool within Racecourse, off M57/58 junction then A59.
Blyton (Lincolnshire) (2.22, 2.231 or 4.438 km)
SK 870965. 5 miles North of Gainsborough, off A159 to Scunthorpe.
Boyndie Drome (Banffshire) (0.825 or 0.865 km)
NJ 615645. 4 miles West of Banff, off A98.
Brighton (E. Sussex) (0.402 km)
TQ 314039. Madeira Drive, sea front.
Brooklands (Surrey) (0.881 km)
TQ 067628. Mercedes-Benz World, Byfleet, off A318.
Crystal Palace (London) (0.73 km)
TQ 345712. Crystal Palace Park, 5 miles North of Croydon.
Curborough (Staffordshire) (0.831, 1.447 or 1.467 km)
SK 134128. 2.5 miles North of Lichfield, between A38 and A515.
Dalton Barracks (Oxfordshire) (3.21, 1.61 or 1.211 km)
SU 478994. Abingdon Airfield, 1 mile North-West of Abingdon, off A34.
Debden Airfield (Essex) (1.95 or 2.25 km)
TL 567344. 3 miles South of Saffron Walden, off B184.
Eelmoor (Hampshire) (1.77 km)
SU 848525. 2 miles North-West of Aldershot, off A323.
Five Mile Road (Jersey) (0.402 km)
West coast. 6 miles West of St. Helier.
Fort Corblets (Alderney) (0.65 or 0.775 km)
Corblets Bay, 2 miles North-East of St. Anne.
Grampian Transport Museum (Aberdeenshire) (0.805 km)
NJ 578160. 25 miles West of Aberdeen, off A944 at Alford.
Kames Motorsport Complex (Ayrshire) (0.8 km)
NS 696264. 1 mile South of Muirkirk, off A70.
Littleferry Kart Circuit (Sutherland) (0.808 or 0.963 km)
NH 819979. 2 miles South-West of Golspie, off A9.
Llandow Circuit (S. Glamorgan) (1.45 km)
SS 958712. 4 miles South-West of Cowbridge, off B4270. Next to Kart Circuit.
Lotus Test Track (Norfolk) (4.5 km)
TG 156007. At Hethel, 8 miles South-West of Norwich, off A11.
MIRA (Warwickshire) (1.704 km)
SP 364952. 3 miles North of Nuneaton, off A5.

North Weald (Essex) (1.8 or 2 km)
TL 490038. 2 miles North-East of Epping, off B181.
Nutts Corner (N. Ireland 3 miles) (1.495 or 1.605 km)
J 203768 3 miles east of Crumlin
Portreath (Cornwall) (1.5 km)
SW 670457. 4 miles North-West of Redruth, of B3300.
Rushmoor Arena (Hampshire) (1.26 km)
SU 854520. Off A323 between Aldershot and Fleet.
St. Angelo (Co. Fermanagh) (4.2 km)
H 232496 (N. Ireland). Enniskillen Airport, 4 miles North of Enniskillen.
St. Saviour (Guernsey) (0.6 km)
St. Saviour Reservoir, Le Neuf Chemin Road, North-West of St. Saviour.
Three Sisters Race Circuit (Lancashire) (1.059, 1.138 or 1.473 km)
SD 581012. Ashton-in-Makerfield, 3 miles South of Wigan, off A46.
Treloy (Newquay) (1.35 km)
SW 862645. Newquay Cornwall Airport. Off A3059 Newquay to St. Columb.
Vale Castle (Guernsey) (0.532 or 0.6 km)
Castle Road, Vale. 2.5 miles North-East of St. Peter Port.
Vazon Bay Coast Road (Guernsey) (0.402 km)
Between Richmond and Albecq, Guernsey.
Victoria Avenue (Jersey) (0.402 km)
West of St. Helier town centre.

Note: Sprint events are also held at some Race Circuits.

RALLYCROSS

Blyton (Lincolnshire) (1.3 km)
SK 870965. 5 miles North of Gainsborough, off A159 to Scunthorpe.

Rallycross tracks are also located at the following Race Circuits:
Knockhill
Lydden
Pembrey

DRAG RACING

Santa Pod (Northamptonshire)
SP 690610. 7 miles South-East of Wellingborough, between A6 and A509.

Kart Tracks

Barton Stacey (Hampshire) near Andover, 2 miles from Barton Stacey village off A303. [SU 445 425]
Bayford Meadows (Kent) 1 mile east of Sittingbourne, ME10 3RY. [TQ 912 645]
Bishopscourt (Co. Down) 6 miles east of Downpatrick, Northern Ireland, BT30 7EY. [J 570 425]
Blackbushe (Surrey) off A30 at Blackbushe Airport and follow signs towards Sunday Market, GU17 9LG. [SU 802 593]
Boyndie (Banffshire) 4 miles west of Banff. [NJ 615 645]
Buckmore Park (Kent) Chatham, between J3 on M2 and J6 on M20, ME5 9QG. [TQ 742 632]
Clay Pigeon (Dorset) On A37 midway between Dorchester and Yeovil (10 miles to each), DT2 9PW. [ST 610 028]
Crail Raceway (Fife) A197 approx. 1 mile from Crail. [NO 627 094]
Darley Moor (Derbyshire) 2 miles South of Ashbourne on A515, DE6 2ET. [SK 173 423]
Fulbeck (Lincs) 8 miles east of Newark off A17 at Brant Broughton Cross Road. [SK 901 505]
Glan y Gors (Conwy) On A5, 1 mile west of Cerrigydrudion village, LL21 0RU. [SH 937 495]
Hooton Park (Wirral) Ellesmere Port, 2 miles off Junction 6 M53. [SJ 368 797]
Jurby (Isle of Man) Junction of A14 and A10, 7 miles north-west of Ramsey. [SC 363 987]
Kimbolton (Cambs) 7 miles north-west of St Neots on B645. [TL 111 699]
Larkhall (Strathclyde) Summerlee Raceway, Merrydon Road off A72. 800m, off J7 of M74. [NS 759 527]
Littleferry (Sutherland) Golspie, off A9 Inverness to Thurso. [NH 819 979]
Llandow (Vale of Glamorgan) 9 miles from Cardiff, off B4270 between A48 and Llantwit Major, CF71 7PB. [SS 959 715]
Lydd Raceway (Kent) 20 miles from J10 of M20, TN29 9JH. [TR 044 190]
Mansell Raceway (Dunkeswell) (Devon) Dunkeswell 6 miles north of A30 at Honiton, EX14 4LT. [ST 132 083]
Nutts Corner (N. Ireland) 3 miles east of Crumlin. [J 203 768]
P.F. International (Lincs) 10 miles east of Newark, 2 miles off A17 towards Stragglethorpe. [SK 897 499]
Rissington (Glos) RAF Station. Off the A429, 4 miles east of Bourton on the Water. [SP 218 186]
Rowrah (Cumbria) On the A5086 4 miles north-east of Frizington and 8 miles south-west of Cockermouth, CA26 3XU. [NY 068 183]
Rye House (Herts) J5 of M25 then A10, Rye Road, Hoddesdon, EN11 0EH. [TL 389 095]
Shenington (Oxon) 8 miles west of Banbury, off A422 Banbury-Stratford Road, OX15 6NW. [SP 362 428]
Sorel Point (Jersey) off La Route du Nord, north of St John's village
St. Sampsons (Guernsey) 1 mile from St. Peter port
Three Sisters (Lancs) 5 minutes off J25 of M6, WN4 8DD. [SD 582 014]
Warden Law (Sunderland) 2 miles east of Haughton-le-Spring SR3 2PR
Whilton Mill (Northants) 3 miles north of Weedon off the A5. From north M1 J18, from south M1 J16. [SP 622 646]

British Championships

Contact Details

BRITISH TOURING CAR CHAMPIONSHIP. Championship Regulations available from
danjmayo@aol.com or Dan Mayo, 17 White House Grove, Elvington, N. Yorkshire YO41 4AL.
☎ 01904 607320. Website: www.btcc.net

BRITISH GT CHAMPIONSHIP. Championship Regulations available from
Stephane Ratel Organisation Ltd, 110 Old Brompton Road, London SW7 3RA.
☎ 0207 835 2573. Fax: 0207 370 4950. Website: www.britishgt.com

BRITISH HILL CLIMB CHAMPIONSHIP AND HILL CLIMB LEADERS CHAMPIONSHIP.
Championship Regulations available from Tim Wilson, 130 Main Street, Little Ouseburn, York YO26 9TG.
☎ 01423 339062. Email: wilson380@btinternet.com

BRITISH SPRINT & SPRINT LEADERS CHAMPIONSHIP. Championship Regulations available from
Peter Howgate, Hillclimb Sprint Association. Website: www.britishsprint.org

BRITISH RALLY CHAMPIONSHIP. Championship Regulations available from
Iain Campbell, Motorsport UK, Bicester, OX27 8FY.
☎ 01753 765100 ☎ (m) 07768 537787. Email: iain.campbell@motorsportuk.org

BRITISH CAR TRIAL CHAMPIONSHIP. Championship Regulations available from
Andrea Richards, Motorsport UK, Bicester, OX27 8FY. Email: trials@motorsportuk.org

BRITISH SPORTING TRIALS CHAMPIONSHIP. Championship Regulations available from
Andrea Richards, Motorsport UK, Bicester, OX27 8FY. Email: trials@motorsportuk.org

BRITISH AUTOTEST CHAMPIONSHIP. Championship Regulations available from
Andrea Richards, Motorsport UK, Bicester, OX27 8FY. Email: autotests@motorsportuk.org

BRITISH KART CHAMPIONSHIP. Championship Regulations available from
Email: danielle.short@motorsportuk.org Website: www.britishkartchampionships.org

BRITISH SUPERKART CHAMPIONSHIP. Championship Regulations available from
Email: britishsuperkarts@motorsportuk.org Website: www.britishsuperkart.org

BRITISH DRAG RACING CHAMPIONSHIP. Championship Regulations available from
Santa Pod Racers Club. Email: ir.marshall@btconnect.com Website: www.britishdragracing.org

BRITISH HISTORIC RALLY CHAMPIONSHIP. Championship Regulations available from
Colin Heppenstall, 2 Monroe Avenue, Linsayfield, East Kilbride G75 8WA.
☎ (m) 07736 083745. Email: r.a.c.rally@btinternet.com

BRITISH CROSS COUNTRY CHAMPIONSHIP. Championship Regulations available from
TBA.

BRITISH RALLYCROSS CHAMPIONSHIP. Championship Regulations available from
Email: hannah@lyddenhill.co.uk Website: www.rallycrossbrx.com

Part 2:

The Regulations

(A) National Sporting Code

At first sight the array of regulations governing motor sport can seem daunting. To help readers better understand the framework in which they operate, the following describes the basic administrative background against which the regulations are applied.

Definitions and Abbreviations

FIA (Fédération Internationale de L'Automobile):
The International Federation of Recognised Automobile Clubs.

The Code (Code Sportif International):
International Sporting Code of the FIA.

CIK-FIA (Commission Internationale de Karting):
The FIA Commission responsible for Karting.

ASN: A National Automobile Club or other national body recognised by the FIA or the CIK-FIA as sole holder of sporting power in a country.

Motorsport UK (Motorsport UK Association Ltd):
The sole body (ASN) to which the FIA and the CIK-FIA has delegated the control of motor sport in the British Isles (excluding The Republic of Ireland).

The Motorsport UK Board:
The Sporting Commission of Motorsport UK.

MSC (The Motor Sports Council):
The role of the Council as an advisory body, pursuant to its terms of reference, is to develop strategic thinking and provide a conduit of information from the full spectrum of UK motor sport, giving guidance to the Board in relation to key issues.

Club: Any body recognised by Motorsport UK as a Club.

National Court: The Motorsport UK National Court.

The National Court. exercises regulatory responsibilities and judicial powers in connection with the National Competition Rules (and where appropriate International Competition Rules) and the rules governing the National Court. The National Court is further the National Court of Appeal.

International Control of Motor Sport

1.1. International Control of Automobile Competitions.

The FIA is the sole International authority entitled to make and enforce rules and regulations for the encouragement and control of automobile competitions.

1.1.1. International Sporting Code. So that the above powers may be exercised in a fair and equitable manner the FIA has drawn up the present 'International Sporting Code'.

1.1.2. Each National Club or Federation belonging to the FIA, shall be presumed to acquiesce in and be bound by this Code (including records).

National Control of Motor Sport

2.1. Subject to such acquiescence and restraint, one single Club or one single Federation per country, called the ASN, shall be recognised by the FIA as sole International Sporting Power for the enforcement of the present Code and control of motor sport in its own country. The ASN for this country is Motorsport UK.

Each ASN may draw up its own National Competition Rules which are submitted annually to the FIA.

2.1.1. Motorsport UK being recognised by the FIA as the ASN of the British Isles (excluding The Republic of Ireland) and having acquiesced in and declared itself to be bound by the Statutes of the FIA and the Code, now therefore declares its sole right to control vehicle competitions in accordance with the Code in such territory being hereafter collectively referred to as the 'territory of Motorsport UK'.

2.1.2. Motorsport UK, as defined in its Constitution and Terms of Reference, shall form the Sporting Commission.

2.1.3. Motorsport UK has the judicial powers conferred by the Code and exercisable under these Regulations subject to such reservation as the Rules and Constitution of Motorsport UK may require.

2.1.4. The logo of Motorsport UK shall not be used by any person or body for any purpose whatsoever without the written consent of Motorsport UK.

The General Regulations

2.2. That the above powers may be exercised in a fair and equitable manner, Motorsport UK has drawn up these Rules, to be known as 'the General Regulations' and hereinafter referred to as 'these Regulations', which are in conformity with the Code.

Application of these Regulations

2.2.1. These General Regulations apply to all Licence Holders and as provided within to other Persons as defined.

2.2.1.1. These General Regulations apply to all Events Permitted or howsoever sanctioned by Motorsport UK under or by virtue of these General Regulations and its inherent authority as ASN and;

2.2.1.2. These Regulations also apply to any Licence holder or Person while engaging in any non-Permitted activity in

Note: Throughout these sections an asterisk(*) indicates a requirement for additional information to be printed in the Supplementary Regulations (SRs). Text shown in Italics indicate a Regulation which may be amended in the SRs.
Text shown in red indicates a new or amended regulation for 2022

which that Licence holder (or the holder of a Permit or other written permission issued by Motorsport UK) produces to the organiser of that activity and or in any way relies upon that Licence or the fact of that Licence, Permit or written permission in order to be permitted to take part in the relevant activity or where the organiser of that activity places any reliance upon or makes any reference to these General Regulations or any subsidiary Regulation including technical notes or advices or guidance or to the International Sporting Code of FIA within the documents for the activity and;

2.2.1.3. These Regulations also apply to all Licence holders as to their conduct generally other than at a Permitted Event and or to the Licence holder participating as Competitor or Official or Person in any event sanctioned or Permitted by FIA or another ASN where such conduct may be considered to have been a breach of these General Regulations and or may have brought motorsport generally and or Motorsport UK the FIA or any other ASN or its Officials into disrepute whether contrary to C.1.1.4 or otherwise.

2.2.1.4. Any Licence holder or Person suspected of any breach of Regulations may have their Licence suspended pending any investigation of or Inquiry into the alleged breach (H.3.1.2 and H.6) and or be declined the permission to undertake any participant activity at any Permitted Event or to attend any Venue Licensed by Motorsport UK.

Interpretation of these Regulations (H.1.8)

2.2.2. Motorsport UK of its own motion or by referral to the National Court is empowered to decide any question raised within its territory concerning the interpretation of the Code or of these Regulations. In interpreting any regulation the word 'his' is deemed to include 'her' and persons referred to in the singular includes where the context so admits, the plural.

2.2.3. Motorsport UK of its own motion or by referral to the National Court is empowered to decide and adjudicate on any question relating to Motor Sport raised within its territory, which is not covered by the Code or these Regulations.

2.2.4. Insofar as they do not conflict with these Regulations, any Supplementary Regulations or Official Instructions applicable to a competition shall be deemed to form part of these Regulations.

International Events (D.4.3.1(e))

2.3. Events run under an International Permit issued by Motorsport UK must comply with the International Sporting Code and will only refer to these Regulations in respect of any matter not covered by the Code.

Other Events (D.4.3.1(a) to (d))

2.3.1. At all events other than those for which Motorsport UK has issued an International Permit, the Judicial Procedures and Penalties detailed in Section C of these regulations will apply.

Exemption from Regulations

2.4. Motorsport UK as the ASN and consistently with A.2.5 has the authority to suspend, substitute or vary any of these Regulations and for such duration as it shall determine in its absolute discretion or to grant Exemption from these Regulations under such terms, conditions and for such duration as it shall consider necessary in order to provide for particular circumstances or to enable particular features to be included in a Competition.

2.4.1. An Exemption from these Regulations may also be granted to events as detailed in D5.

Alteration of Regulations

2.5. Motorsport UK Board reserves to itself the right at any time to alter these Regulations and to alter or add to any Appendices thereto from time to time. Notice of such amendments or additions will be published in the Motorsport UK Magazine or other official announcement.

2.5.1. Deleted.

Stability of Regulations

2.5.2. All Specialist Committees must note that any new Sporting rule should normally be approved by Motorsport UK Board at least 6 months before it comes into force and any new Technical rule at least 12 months before it comes into force. New or amended regulations can only come into force on the 1st January in any year. The only exception is in respect of urgent safety, correction of error, or as exceptionally agreed by the Motorsport UK Board. Even in safety matters a practical period of delay is desirable. With regard to matters concerning eligibility (of, for example, tyres and kart engines) applying from the 1st January in any year, the period of notice may be varied with the agreement of the Motorsport UK Board.

Compliance with Regulations

2.6. At all times the organisers of an event shall ensure compliance with these Regulations and any other Motorsport UK requirements. It is a condition of approval that all laws of the land shall be complied with and breach of this condition may invalidate any approval which may have already been given.

2.6.1. Every person, body, group of persons, etc., organising a competition or taking part therein shall by so doing or by and upon applying for an organising permit, or by and upon applying for a licence from Motorsport UK, or by and upon entering for a competition, be deemed to have and recognised that they have:

2.6.2. Made themselves acquainted with these Regulations and agree to pay the charges and fees pursuant to the Regulations (and the Appendices thereto), and

2.6.3. Submitted themselves without reserve to the consequences resulting from these Regulations and any subsequent alteration thereof and agreed to pay as liquidated damages any fines imposed upon them within the maximum set out in Part 3 Appendix 1, and

2.6.4. Agreed not to pursue any right of action which they may have before any court or tribunal without having first exhausted any other remedies provided for in these Regulations.

Approval to Organise an Event

2.7. Motorsport UK approval for the organisation of an event (except authorised Speed Records or as specified in D.5) is reserved for those motor clubs recognised by Motorsport UK as 'Registered to organise Competitions' (Recognised Clubs), which have complied with the requirements regarding Status and Fixture List and must be in membership of a Motorsport UK recognised Regional Association.

The National Court

3. The National Court constitutes for holders of Motorsport UK Licences the final Court of Judgment empowered to settle any dispute which may have arisen between its own Licence holders on its territory in connection with National Motor Sport. The exercise of these judicial powers and functions shall be final and not subject to review.

3.1. The National Court shall exercise the following functions.

(i) Disciplinary – Matters referred to it by Motorsport UK.

(ii) Investigatory – In accordance with regulation (C.9.0)

(iii) Appellate –

(a) Appeals pertaining to eligibility will be dealt with by written submission.

(b) All other Appeals. The Court is the designated National Court of Appeal for the purposes of the FIA International Sporting Code

(iv) Arbitration – see C.10

(v) Deleted

(vi) Club Recognition

3.1.1. The National Court, when convened, shall consist of not more than five and not less than three persons who shall be:

(a) Serving or past members of the Motor Sports Council

(b) Serving or past members of any of the Committees or Advisory Groups to the Board of Motorsport UK

(c) Other suitably qualified persons.

In exceptional circumstances, and with the agreement of all parties, the National Court may consist of two persons.

3.1.2. No person shall be a member of the National Court if he has taken part as a competitor, driver or official in the competition concerning which a decision is to be given or if he has already participated in a decision on the matter in question, or if he is directly or indirectly concerned in such matter.

3.1.3. The Chairman of the Court shall normally be legally Qualified

Club Recognition

4. In order to become recognised a club must have at least 25 members and its rules must have been approved by Motorsport UK. The names and addresses of the members must be supplied with the application. The Club must undertake to comply with all regulations and requirements of Motorsport UK and to pay an annual registration fee and all insurance and other charges and fees due under these Regulations (and the Appendices thereto).

4.1. Applicants for first time Motorsport UK recognition must be a member of a Motorsport UK recognised Regional Association, which shall normally be the Regional Association local to the applicant. Applications will be notified by means of the Motorsport UK Magazine or by an official announcement and are subject to objection within one month from other Registered Clubs before approval by Motorsport UK.

4.1.1. Recognition will only be granted to those clubs where all the members are individuals. Groups, or Associations of Clubs [Recognised Groups] may be recognised in a separate category entitled to accept invitations to Interclub status events and to organise their own Championships. They are not permitted to accept invitations to Clubmans status events, or to organise their own events.

4.2. Regional Centres of Motor clubs which organise events are required to be recognised separately.

4.2.1. Each Centre shall pay a full registration fee and all other charges and fees due under the Regulations (and the Appendices thereto) for the same facilities as a separate club.

4.3. Recognised Regional Associations of Clubs are entitled to accept invitations to Interclub status events and to organise their own Regional Championships. They are not permitted to accept invitations to Clubmans status events, or to organise their own events.

4.4. The continued recognition of any Recognised Club or Regional Centre of Motor club or any other bodies recognised under 4.5 shall be subject to the continuing approval of Motorsport UK and also compliance with these Regulations and payment of the Insurance Premiums due under Part 3 Appendix 1 and any other fees and charges due under the Regulations (or the Appendices thereto).

Other Bodies

4.5. In addition to these Recognised Clubs, Motorsport UK registers certain other clubs and associations of clubs or bodies as responsible organisations in the sphere of motor sport.

Right of Appeal

4.6. New applicants, and existing Recognised Clubs or Regional Centres of Motor Clubs refused recognition or continued recognition by Motorsport UK, (4.1, 4.4) shall have a right of appeal to the National Court. (A3.1(vi) the fee for which is set out in Appendix 1, paragraph 13.)

Notices

5. Any communications required under these Regulations to be made to Motorsport UK or to the MSC shall be addressed to Motorsport UK, Bicester OX27 8FY, or to such other address as may be duly notified from time to time.

5.1. Any communications required under these Regulations to be sent to a competitor shall be sent to the address on his entry form or, if he is the holder of a licence from the Motorsport UK or other ASN, to the address on the licence.

5.1.1. Any communications to be sent to an Organiser or Organising Committee shall be sent to the address on the relevant application for an Organising Permit, or, in the case of an event not organised under permit, to the Secretary of the Organising Club at the address given in the notification of the event to Motorsport UK or his last known address.

5.1.2. Deleted.

5.2. Any communications so sent by post shall be deemed to have reached the addressee by normal delivery of post.

Date of Operation

6. These Regulations shall come into force and be operative from the first day of January of the current year and thereby supersede all previous editions of these Regulations.

Safeguarding Policy

7. Everyone who takes part in motor sport is entitled to do so in a safe and enjoyable environment. All Persons whose activities are within the scope of these Regulations must follow the Motorsport UK Safeguarding Policy and Guidelines (as amended from time to time) and the provisions of this Regulation.

7.1. Motorsport UK is committed to helping everyone in motor sport accept their responsibility to safeguard Children and Vulnerable People from harm and abuse and support them to do so. This Regulation and the Motorsport UK Safeguarding Policy and Guidelines applies to Persons involved in motor sport. All Persons participating in motor sport have a duty of care to safeguard the welfare of Children and Vulnerable People and prevent their abuse.

7.2. Motorsport UK shall have jurisdiction to deal with any allegation of abuse of a Child or Vulnerable People, any breaches of the Motorsport UK Safeguarding Policy and Guidelines and/or any breach of this Regulation A7.

Health and Safety Policy

8.1. Motorsport UK is fully committed to a high standard of health and safety management within the organisation and across motor sport in the United Kingdom. Motorsport UK identifies that a comprehensive Health and Safety Management System and Strategy will help identify and minimise potential risks for employees, volunteer officials, competitors and members of the public involved in motor sport in the United Kingdom. In pursuance of achieving and maintaining such high standards in health and safety:

8.1.1. The offices and activities of Motorsport UK will be managed in accordance with relevant legislation as applied in the United Kingdom.

8.1.2. All events must be organised by Motorsport UK Recognised clubs and organisations in accordance with the regulations and requirements of Motorsport UK, taking guidance as appropriate from the FIA and so as to respect appropriate statutes and legislation as is applicable within the United Kingdom. Identifying clearly defined roles and responsibilities for health and safety within Motorsport UK, for its Recognised clubs and organisations and generally within motor sport in the United Kingdom enables all parties to meet such responsibilities.

A good health and safety management system and strategy is an asset to all parties involved in motor sport in the United Kingdom.

Environmental Policy Statement

9.1. Motorsport UK recognises that for motor sport activities to be sustainable they must be managed such as to minimise the depletion of natural resources and pollution of the environment.

9.1.1. Regulatory requirements are and will continue to be imposed such as to manage:

a) Noise levels generated by motor sport events

b) Air pollution generated by motor sport events.

Regulations are and will continue to allow for the use of such fuels and energy sources as they become available.

9.1.2. Training and guidance is and will continue to be given in respect of managing the disposal of potentially environmental damaging materials such as tyres, oils, fuels, and cleaning agents etc. and to effectively manage spillage of polluting fluids.

9.1.3. Training and guidance will be given in respect of land management not only in respect of dealing with polluting substances but also to minimise the possibility of venues being damaged by destruction of soil strata.

Code of Conduct

10.1. Motorsport UK pursuant to and for all purposes of General Regulations 2.2.1.1 through 2.2.1.4 requires as a condition of holding any Licence or other permission issued by it as ASN that all such Licence holders and permittees shall:

10.1.1. Abide by Motorsport UK regulations.

10.1.2. Respect the decisions of event officials.

10.1.3. Treat all competitors, marshals and officials equally with respect.

10.1.4. Maintain the highest standards of driving behaviour.

10.1.5. Conduct themselves in a proper manner at all times and always behave in the best interests of UK motor sport.

10.1.6. Make every effort to minimise the impact of their activities on the environment around them.

Abuse

10.2. For the purposes of these General Regulations Motorsport UK will not tolerate any form of abuse or aggression towards officials, marshals, spectators and competitors.

10.2.1. Motorsport UK and the National Court will impose the most stringent sanction against any transgression of 10.2 and may suspend all Licences (H.3.1.2) pending investigation and/or referral to the National Court.

Concussion Policy

11. Concussive injury can be serious, especially if repeated within a short period or in the younger age group. For this reason Motorsport UK has introduced this policy restricting activity following this type of injury.

Concussion is diagnosed following an accident including the following symptoms:

- Transient unconsciousness (not always present)
- Confusion / disorientation
- Amnesia
- Headache
- Dizziness / nausea

Following diagnosis of one or more of these symptoms this policy must be instituted by the meeting/event Chief Medical Officer, or equivalent.

11.1. The competitor must not compete further in the meeting/event (including subsequent days).

11.2. The competitor's licence should be suspended and retained by the Clerk of the Course, then forwarded to the Medical Department of Motorsport UK, together with a note explaining the reason for return.

11.3. Upon receiving the licence Motorsport UK will send the licence holder an explanatory letter with a pro forma for them to take to their GP, or licence medical issuing doctor. This will ask the doctor to confirm absence of symptoms.

11.4. Upon receipt of the pro forma certifying absence of symptoms the licence will be returned. Any concerns should be notified to the Chairman of the Medical Advisory Panel.

11.5. It is important that the competitor is advised not to drive any vehicle until symptoms have resolved. They should also be advised to consider discussing their employment role with either their Occupational Health Department or General Practitioner.

11.6. Professional racing series, where regular medical personnel attend, may institute their own policy, provided this policy is followed as a minimum.

11.7. The duration of symptoms is variable, with most cases recovering within a period of 2 to 3 weeks. This policy should generally cover that period. Some cases have persistent symptoms, in these cases expert opinion should be obtained.

11.8. A second episode of concussion, occurring within a period of three months will require specialist referral prior to the return of the licence.

Drones Policy

12. The Motorsport UK's Drones Policy, applicable to all events, is published on the Motorsport UK's website.

Data Protection Policy

13. The Motorsport UK's Data Protection Policy is published on the Motorsport UK's website.

(B) Nomenclature and Definitions

Basic to understanding the sport is understanding the terminology which defines it. These descriptions define key words and phrases which are referred to in the Regulations that follow.

Adequate Strength. The component concerned is of sufficient strength to fulfil the function for which it was intended.

Advertisement. Any lettering, additional trademark or symbol appearing on a vehicle, including any border or background that is distinguishable from the underlying surface on which it appears.

Aerodynamic Device. Any device or part of a vehicle (excepting normal and conventional styled bodywork) that has a principal effect of creating aerodynamic downforce. Within this definition should be included forward facing gaps or openings in the bodywork, but will not include spoilers in the form of raised surfaces continuous with the body surface and not wider than the body surface. It is not permitted to mount an aerodynamic device on unsprung parts of the vehicle.

Appeal. A formal complaint, lodged within specified time limits, by an entrant or Competitor about a decision, act or omission by an official of a meeting (C.6.1.1). In the event of an appeal being made against a decision, the entrant or Competitor involved must have been either:

(1) The party involved in the incident giving rise to the decision, or

(2) The party who lodged the protest which resulted in the decision, or

(3) The party against whom a penalty has been imposed.

Approved Formulae. A set of Regulations, approved by Motorsport UK, providing the parameters for a vehicle to be used in a specific Competition or series of Competitions.

Autocross. A speed event on a closed circuit with a grass or unsealed surface.

Automobile/Car/Vehicle. Land vehicle running on at least four non aligned complete wheels, of which at least two are for steering and at least two for propulsion.

By agreement with the Auto-Cycle Union includes pre-1941 three wheel cars in all Events and such vehicles of any age in Touring Assemblies

Autotest. A competition for Cars in which marking during the event is based solely on a competitor's performance in manoeuvring tests, and defined as:

(a) *Autotest.* These tests may include spin or handbrake turns, stop astride lines, and some reversing, and may be at one or more sites. A passenger is not allowed. (see Section M);

(b) *Production Car Autotest.* A competition for Production Cars capable of being taxed and MOT'd. These tests may include a limited number of spin turns or, handbrake turns, stop astride lines, or reversing, and may be at one or more sites. A passenger must be carried in the front seat. (see Section M);

(c) *AutoSOLO.* For Road Going Cars, with tests held on a sealed surface. These tests shall be all forward and non-stop, without requiring any spin or handbrake turns, and may be at one or more sites. A passenger may be carried in the front seat (see Section M).

Ballast. Non functional material added to increase vehicle weight. Units of ballast are to be strong and unitary blocks, fixed by means of tools with the possibility of affixing seals and placed on the floor of the cockpit or the luggage compartment, visible and sealed by the Scrutineers (J.5.15.2). Kart ballast see U.17.29.1.

Bambino Kart Event. Pre-Race training for 6 and 7 year olds, which can only be held on circuits specifically licensed for Bambino. Drivers must hold a Kart Clubman licence, which they can obtain from their 6th birthday and may continue in Bambino until their 8th birthday. Full details and criteria contained within the Karting UK Yearbook.

Barred. A restriction imposed on an individual's involvement in motor sport on such terms as may be determined by Motorsport UK.

Bodyshell. The major structural part of the car constructed of all parts that are permanently attached (by welding, brazing, riveting, bonding, etc.) around which are assembled the mechanical components. Panels that are attached by means of removable fasteners are not considered to be part of the bodyshell.

Bodywork. All entirely sprung parts of the car in contact with the external air stream, except the rollover structures and the parts definitely associated with the mechanical functioning of the engine, transmission and running gear. Airboxes and radiators are considered to be part of the bodywork. Exterior rear view mirrors are not considered to be part of the bodywork. Bodywork is differentiated as follows:

(a) Completely closed bodywork.

(b) Completely open bodywork

(c) Convertible bodywork with the hood in either supple or rigid (hardtop) material.

Brake light. Rear facing red light(s) each of 750 sq mm minimum surface area equipped with a 21W bulb or of equal luminosity directly operated without delay by application of the vehicle brakes.

Bulkhead. A partition separating one vehicle compartment from another.

Cadet Marshal. A Cadet Marshal grade can be issued to marshals between the dates of their 11th birthday and their 16th birthday and whose details are made available to Motorsport UK for registration purposes. They may perform a limited range of duties appropriate to the grade and type of event, in line with Motorsport UK Guidelines.

In order to ensure compliance with the Motorsport UK Safeguarding Policy and Guidelines, all events using Cadet Marshals are required to include in the regulations for the event contact details of a Motorsport UK Safeguarding Officer.

Car Trial. A 'Sporting Trial' confined to vehicles of a production type over a course that is suitable to test equally the capabilities of cars of all sizes.

Catalytic Converter. A device designed and used to reduce the quantity of toxic emissions produced by an internal combustion engine.

Chassis. The overall structure of the car around which are assembled the mechanical components and the bodywork.

Championship. An event or series of events organised for the purpose of establishing the right to an individual or collective title.

Child. A person under the age of eighteen years as defined by the Children Act 1989 and the term "Children" means more than one Child.

Circuit. The whole area used for an event under the control of the organising club and/or a circuit owner.

Class. A division of vehicles by their engine capacity or any other means of distinction.

Classic Reliability Trial. A Competition based on the ability to climb hills or traverse difficult sections non-stop, that may use the public highway for all or part of its route or may be entirely on private ground.

Clubmans Cars. Open Sports Racing Car constructed in accordance with the technical regulations published by The Clubmans Register.

Clubman's Event. An event confined to members of the sole organising club, and, by invitation, to members of a limited number of other clubs.

Club Safeguarding Officer. A person designated to manage safeguarding at a club, association or Organising Club.

Clubsport Event. A Clubsport Event is a competition involving motor vehicles, but not necessarily exclusively and where the emphasis is on the social element rather than any outright performance of the vehicle, and are of an event type prescribed in D5.

Co-Driver. The second member of each crew competing in Special Stage Rallies.

Commitment Guarantee (Race). A written guarantee in the form required by Motorsport UK for any proposed Championship that has not previously run as a Series. This is additional to any Championship Permit Fee and if the Championship runs as specified during the first three years this Guarantee will be discharged at the end of the third year.

If the Championship fails to take place or ceases prematurely the Commitment Guarantee will be enforceable.

Any commercial liabilities arising from the Championship during these first three years, are the responsibility of the Club/Championship Organisers. Any forfeit Guaranteed sum received by Motorsport UK will be paid to a registered charity nominated by Motorsport UK or used to fund training or prizes.

Competition. That part of an Event that is given a competitive nature by the publication of results. It must be completed by the end of the meeting. An individual specific event, such as a gymkhana or treasure hunt, shall not be a Competition for the purpose of these Regulations if, on being informed in writing of the details of the proposed event, Motorsport UK has waived in writing the necessity for an Organising Permit and the event takes place in accordance with such details.

Competitor. A person or body whose entry is accepted for or who competes in any event whatsoever, whether as Entrant, Driver, Co-Driver, Navigator or Passenger.

Competitor's Licence Record. The record of the Competitor's Competition licence history, including any penalty points and other judicial matters.

Competition Numbers. Numbers displayed on vehicles in Competition for identification purposes.

Composite. Material formed from several distinct components, the association of which provides the whole with properties which none of the components taken separately possess.

Control or Check. Any point that Competitors must visit during an event. A Control will be manned by officials; a Check may or may not be manned. If the term Time Control is used this will imply that the Competitor's time of arrival at or departure from this point is recorded.

Control Fuel. Fuel supplied from a defined source with chemical composition monitored in a manner defined by Motorsport UK Regulations.

Control Line. The line by reference to which a vehicle is timed or its performance in a Competition is determined.

Course. The track, plus all run-off areas, up to and including safety barriers, fences and walls.

Cross Country Junior Trials Vehicle. A two-wheel drive vehicle adapted from a front-engined lawn or garden tractor with the cutter deck and associated ancillaries removed, and fitted with a four stroke petrol or diesel vertical crankshaft engine of the Industrial and Commercial restricted type.

Cross Country Vehicle. A vehicle that has a manufacturers' design function to traverse arduous cross country terrain.

Cross Country Event. An event intended only for Cross Country vehicles. These may be defined as follows:

(a) *Competitive Safari.* A timed event taking place on private ground that will be laid out over one or more courses and at one venue only.

(b) *Cross Country Orienteering.* An event involving navigating and driving a vehicle to an objective, or series of objectives.

(c) *Cross Country Vehicle Timed Trial.* A trial taking place on one area of private ground in which the marking during the event is mainly based upon the ability of Competitors to climb hills or traverse difficult sections non-stop, but where the results are decided predominantly by the time taken to traverse those sections.

(d) *Cross Country Vehicle Trial.* A trial in which the marking for the event is mainly based upon the ability of Competitors to climb hills or traverse difficult sections non-stop, and in which the mileage upon a public highway does not exceed 50 miles.

(e) *Hill Rally.* An event of which the main portion of the route is cross country, and in which the marking for maintaining a set time schedule shall form a substantial part of the Competition. A Hill Rally may include tests or observed sections.

(f) *Point to Point.* An event the object of which is for a team of vehicles to seek and visit points spread out on open ground. The points must be accessible by vehicle(s) and it may require team effort to reach and pass through the points. Public highways must not be used.

(g) *Team Recovery.* An event the object of which is for a team of vehicles, by self recovery or team effort, to proceed through an observed section in the shortest possible time.

(h) *Winch Recovery.* An event the aim of which is to move an object (normally a demobilised vehicle) by winching through a gate and along a specified course.

(i) *Promotional Event.* A non-competitive event designed solely to enable participants to experience driving their vehicles off-road, and to introduce them to organised cross-country driving.

(j) *Challenge Event.* An event the aim of which is for competitors to manoeuvre their vehicles to a remote location by means of driving, towing and or winching, or any combination thereof and where proof of visiting that location is by way of the scorecard, which shall be permanently attached to the vehicle, being officially marked.

(k) *Cross Country Driving Test.* A Cross Country competition in which marking during the event is based solely on a Competitor's performance in manoeuvring tests. These tests may be at one or more sites on private property and be on unsealed surfaces and intended to encourage newcomers to the sport.

Cylinder Volume. Volume V generated in cylinder (or cylinders) by the upward or downward movement of the piston(s).

V = 0.7854 x b2 x s x n

where: b = bore
s = stroke
n = number of cylinders

Data Acquisition. The collection and storage of data on a vehicle, also termed "data logging". Data loggers acquire and store data until the data is downloaded.

For karting applications, data loggers are acceptable, provided there is no electrical connection between the data logger and the ignition system of the kart other than to an insulated section of the high-tension (HT) lead. Any lap-timing device used as part of the data logger must adhere to the lap-timing section of these definitions.

In karting terms, a data logger is a combination of an electronic memory and a series of sensors and looms, usually allied to a beacon detector for lap-timing. Data is usually viewable on a software program on a computer after download from the memory. A data logger may have Driver instrumentation connected to it for on track display of information to the Driver.

DBS. The Disclosure and Barring Service.

DBS Disclosure. A DBS Disclosure issued by the DBS including any renewal disclosures.

Disqualificaton. Disqualification forbids the person concerned to take part in any particular Competition, or in several sporting Competitions of the same meeting. Disqualification may be applied in retrospect, by the deletion of any result in any Competition.

Drag Race. A race between two cars over a flat and straight course of 440yds, with a minimum braking distance of 800yds, and a minimum width of 50ft.

Drag Racing Vehicle. A vehicle designed and prepared to obtain maximum acceleration over a straight course.

Driver. A person nominated as the Driver of a vehicle in any event.

Driver Instrumentation. The medium by which information is displayed to the Driver while the vehicle is on the circuit or in the pits/paddock. Driver instrumentation can be driven either by stand-alone sensors, or driven by a data logger. Sensors to drive the instrumentation are considered as part of the Driver instrumentation.

For karting applications Driver instrumentation is permitted, whether the display is stand-alone or used in conjunction with a data logger.

Duration of Meeting or Event. A Meeting is considered to have begun as from the beginning of the first event, and shall end when the last event has finished. An Event is considered to have begun as from the time scheduled for the beginning of administrative checking and/or scrutineering and shall include practice and the Competition itself. It shall end upon the expiry of the time limit for protests or appeals, or the end of any hearings.

Electric vehicle. Vehicles which solely use electricity stored on board and which are not necessarily or essentially propelled by the conversion of solar energy.

Endurance Kart Event. A Kart Race of a minimum of 60 minutes duration, where the need to refuel and/or make Drivers stops, or changes, is an integral part of the race. Drivers must have reached their 16th birthday. A group of licensed drivers may be referred to collectively by their team name without the requirement to hold an Entrants Licence.

There are two types of Endurance Kart events and these require different licence grades, namely:

(a) For engines which do not exceed 15hp in total per kart drivers must hold a minimum of a Kart Clubman Licence.

(b) For engines exceeding 15hp in total per kart drivers must hold a minimum of a Kart Interclub (Novice) licence.

Endurance Race. A Race scheduled to have a minimum of 90 minutes duration, with mandatory refuelling and/or Driver stops and/or Driver changes, as an integral part of the race.

Entrant. The person or body responsible for making an Entry into a Competition and responsible for all matters pertaining to that Entry.

Environmental Spill Kits. For use in managing spills of automotive fluids, lubricating oils and fluids, gasoline, coolant additives, hydraulic oil etc. All kits to include adequate number of disposal bags for collection of used materials. Used spill kit materials to be disposed of in accordance with National and/or Local Authority Guidelines.

(i) *Large Spill Kit*
Absorbent pads and/or granular absorbent material capable of dealing with spillages up to 14 litres capacity.

(ii) *Medium Spill Kit*
Absorbent pads and/or granular absorbent material capable of dealing with spillages up to 7 litres capacity.

(iii) *Small Spill Kit*
Absorbent pads and/or granular absorbent material capable of dealing with spillages up to 1.25 litres capacity.

Event. A single activity with its own results or one part or round of a series of events comprising a Championship. It may comprise: free practice and/or qualifying practice sessions; heats and a final; or be divided in some similar manner.

Excluded. A person or body shall be said to be excluded when permanently forbidden to take part in any event whatsoever.

Finishing Line. The last control line on a course.

Forced Induction. Any device capable of augmenting atmospheric pressure to increase the induction of air or fuel/air mixture into the combustion chamber (Superchargers, Turbochargers etc.). Any means of artificially reducing induction air temperature (eg packing with solid CO2 etc.) is prohibited. Ram effects entirely due to the forward motion of the vehicle or tuning of induction or exhaust pipe length are not included within this definition.

Fuel (see Pump Fuel). All substances fed into the combustion chambers of an engine excepting only:

(a) Atmospheric air and water vapour contained naturally therein.

(b) Lubricating oil exceeding in viscosity 5 cSt at 100°C.

(c) Deleted.

Grand Touring Car (GT). An open or closed automobile which has no more than one door on each side and a minimum of two seats situated one on each side of the longitudinal centre line of the car; these two seats must be crossed by the same transversal plane The car must be able to be used perfectly legally on the open road, and adapted for racing on circuits or closed courses.

Ground Clearance. The clearance between the ground and the lowest part of the bodywork, or of the suspended part of the car, in normal trim with the Driver aboard (J.5.20.11).

Gymkhana. An event held wholly on private ground and in which no test is determined solely by the speed of the competing vehicle, or by the skill of the Driver in controlling the vehicle, and in which if there are to be timed tests, there will be at least an equal number of untimed tests. No test may be timed to less than five seconds.

Handicap. A method laid down in the SRs for the purpose of equalising the chances of the Competitors.

Hard Top. An accessory manufactured in rigid material used in place of or to replace collapsible fabric cockpit hoods on open cars. When a hard top is fitted to a vehicle (even temporarily) the vehicle is then defined as closed and must have a rear window installed, unless otherwise stated in SRs.

High Speed Trial. A Competition run on a circuit in which Competitors are required to maintain a minimum speed for a specified time or distance, or cover a minimum distance in a specified time, and may or may not benefit from improving upon the minimum specified. Deemed to be a race and subject to the appropriate conditions.

Historic Motorsport. Competitions under a set of rules that seek to preserve the specification of their period and prevent modifications of performance and behaviour which could arise through the application of modern technology. Historic competition is not simply another formula in which to acquire trophies, it is a discipline apart, in which one of the essential ingredients is a devotion to the cars and to their history. Historic Motor Sport enables the active celebration of the History of the Motor Car.

Holder of Records. The Driver or Drivers who were driving the vehicle when the record was achieved.

Hybrid Vehicle. A vehicle that uses two or more distinct power sources to propel the vehicle.

Identical Cars. Cars belonging to the same production series and which have the same bodywork (outside and inside), same mechanical components and same chassis (even though this chassis may be an integral part of the bodywork in the case of a monocoque or unitary construction).

International Event. An event is International when it is entered on the International Calendar and is open to Competitors and Drivers of various nationalities.

International Record. The best performance accomplished in a determined class or group. There are International Records for Land Vehicles, Automobiles, Special Vehicles and Ground Effect Vehicles.

Junior Autocross. A restricted Autocross class held to permit young Drivers between the ages of 14-17 years of age to compete in Autocross events.

Kart. A small four wheel racing vehicle with a rigid frame and no suspension of the wheels. The engine(s) drive the rear wheels only and these rear wheels must be joined by a single piece rear axle with no differential action between them. The Driver will be seated with feet to the fore.

Kart Category. A category defining the age, and in some cases weight, criteria within which Kart Classes are recognised.

Kart Class. A recognised division within a Kart Category defined by the engine or some other means.

Kart Clubman Event. A Kart Clubman Event is a Kart Race Event run primarily as entry level Karting. Engines may not exceed 17hp for Seniors or 10hp for Juniors, in total per Kart. Competitors must hold a Kart Clubman's Licence, as a minimum.

Kit Cars. A vehicle in which the chassis frame, body panels and other major components are manufactured and/or supplied from one manufacturer to which other specified components and parts are added/assembled to produce a complete car.

Land Vehicle, Automobile, Special Vehicle, Ground Effect Vehicle.

(a) *Land Vehicle.* A locomotive device propelled by its own means, moving by constantly taking real support on the earth's surface, of which the propulsion and steering are under the control of a Driver aboard the vehicle.

(b) *Special Vehicle.* Vehicle having at least four wheels not in line that is steered by at least two wheels and is propelled otherwise than through the wheels.

(c) *Ground Effect Vehicle.* Vehicle that takes a bearing on the ground by the means of a pressurised air cushion, magnetised levitation or similar means.

Lap-Timing. For karting applications, a trackside beacon emitting a continuous output of infra red light is permitted for use in conjunction with a data logger or for stand-alone lap-timing purposes. The position of the trackside unit is either to be located outside of the safety barriers or to be approved by the officials of the event.

Licence. A certificate of registration issued either:

(i) under the Code by an ASN to any person or body wishing to participate in Competitions held under the Code; the holder of such a licence is presumed to know and abide by the Code and these Regulations, or

(ii) by Motorsport UK to any person participating in any other agreed activity under terms defined by Motorsport UK.

Licence Number. The number on a licence.

Light Alloy. Any alloy containing more than 10% aluminium, magnesium or titanium.

Local Record. A record established on a permanent or temporary track approved by Motorsport UK, whatever the nationality of the Competitor.

Locomotive Device. A self contained and powered device capable of moving from place to place.

Main Chassis Structure.

(a) *Single seater racing cars* – the fully sprung structure of the vehicle to which the suspension and/or spring loads are transmitted, extending longitudinally from the foremost front suspension mounting on the chassis to the rearmost one at the rear.

(b) *Other cars* – the overall structure of the car around which are assembled the mechanical components and the bodywork.

Mechanical Components. All those necessary for the propulsion, suspension, steering and braking as well as all accessories whether moving or not which are necessary for their normal working.

Meeting. An organised assembly of Competitors and officials, including one or more competitive or non-competitive activities, taking place within a defined period and governed by the same sets of Regulations.

Methanol. Methyl Alcohol CH3OH. This is a clear colourless liquid, miscible with water acetone and other ketones, the esters, aromatic and highly unsaturates hydrocarbons, and castor oil. It is not miscible in all proportions with straight-run petroleum spirit or mineral oil. B.P. 64.7°C, Specific Gravity 0.796, Flash Point 32°F. For Speed Events, British Standard 506 with an allowance of up to 10% Acetone, is permitted. It must include a Motorsport UK approved additive which provides a distinguishable colour and smell when burning. The maximum permitted volume of additive within the fuel is 0.2%.

Mile and Kilometre. For all conversions of English to Metric measurements and vice versa, the mile shall be taken as 1.609344 kilometres, and the kilometre shall be taken at 0.62137 of a mile.

Model Year. This defines new or re-engineered vehicles that are built to a specification intended for sale and use from the start of the year indicated. Example: Vehicles built in the last months of a year for the next season would be defined as new season vehicles and would have to conform to regulations applicable to the new season.

Modification. Any change in the design, material, shape, dimensions and/or surface finish of a component, except for basic manufacturing processes, normal wear and published service or repair procedures.

Monocoque Chassis. A structure of metal and/or composite materials welded, riveted or bonded into a structure in which the skin carries all or most of the stresses imposed on that structure.

Motorsport UK Safeguarding Officer. A person designated by the Motorsport UK to manage safeguarding at Motorsport UK.

Motorsport UK Safeguarding Policy. The Motorsport UK Safeguarding Policy, Guidance and Procedures (as amended from time to time) or any other successor policy and procedure for the safeguarding of Children and Vulnerable People. The Motorsport UK Safeguarding Policy is binding on all those Persons involved in motor sport.

Nationality. The nationality of a Competitor or Driver for the purpose of these Regulations shall, after the grant of a licence, be deemed to be that of the ASN that last issued a licence.

National Event. An event open only to Competitors and Drivers holding an appropriate National or higher licence issued by Motorsport UK.

Interclub Event. An event in which the Competitors or Drivers who take part have to comply with particular conditions of eligibility for instance:

(a) Membership of an Invited Club or Championship.

(b) A Competition confined to vehicles of a particular make.

National Record. A record made within the territory of Motorsport UK regardless of the nationality of the Competitor.

Navigational Scatter Event. A navigational event where there is no Competition on the public highway and which falls within the provisions of automatic authorisation under the Motor Vehicles (Competition and Trials) Regulations (where applicable). Competitors should be required to visit a number of points at random and no merit should be attached to visiting more than 75% of the points listed. The majority of the points should not be readily accessible without leaving the car and the car shall be an incidental means of transport between the various points.

Navigator. The second member of each crew competing in Rallies, or other events, held entirely on the public highway.

Number Plate. The plate that would normally carry the registration number of the vehicle, were it to be run on public roads. Size and shape to be in accordance with DVLA requirements.

Off-Road Racing. A race on a grass or unsealed surface.

Organising Club. A club registered with Motorsport UK and responsible in all respects for the organisation of an event.

Organising Committee. A committee authorised by the organising club to act on their behalf. The organising committee will take the place of such club for the purpose of these Regulations except that the club will be responsible for the acts and omissions of such organising committee as if such acts and omissions were their own.

Organising Permit. The documentary authority to organise and hold a Competition, granted solely by Motorsport UK.

Original Equipment. See Standard Part.

Pace Notes. Any information (in any recorded form) relating to a Special Stage, that has not been provided to all Competitors by the Organisers of that event. This excludes Subjective Route Notes and the use of commercially available maps.

Paddock. An area provided by the Organisers for the parking of competing and support vehicles, and for the purpose of servicing competing vehicles.

Parc Fermé. A secure identified area designated by and under the control of the Organisers and officials of an event and into which any entrant or Competitor must place the competing vehicle and/or associated items as well as and when directed by the Organisers or officials including the route instructions of the event.

Passenger. A person, other than the Driver, conveyed on a vehicle during a Competition.

Period Defined Vehicles (Non-Rally)

Historic Vehicles – Cars which are either original competition cars or cars built to exactly the same specification as models with national or international competition history complying with the rules of the period.

A1 – (Veteran) Cars of a specification valid before 1 Jan 1905.

B1 – (Edwardian) Cars of a specification valid between 1 Jan 1905 and 31 Dec 1918.

C1 – (Vintage) Cars of a specification valid between 1 Jan 1919 and 31 Dec 1930.

D1 – (Post Vintage Thoroughbred) Cars of a specification valid between 1 Jan 1931 and 31 Dec 1946.

E1 – Cars of a specification valid between 1 Jan 1947 and 31 Dec 1961 (up to 31 Dec 1960 for single seater and two seater racing cars).

F1 – Cars of a specification valid between 1 Jan 1962 and 31 Dec 1965 (from 1 Jan 1961 for single seater and two seater racing cars and up to 31 Dec 1966 for Formula 2).

G1 – Cars of a specification valid between 1 Jan 1966 (1 Jan 1964 for Formula 3) and 31 Dec 1971

H1 – Cars of a specification valid between 1 Jan 1972 and 31 Dec 1976

Non-Historic Vehicles – Non-Historic vehicles built using period specification parts. The period will be defined by the specification date of the latest major component of the vehicle. The major components being; the Chassis, Bodywork/Bodyshell, engine, transmission, brakes, Suspension and Wheels.

A2 – Cars of which the latest major component is of a specification valid before 1 Jan 1905.

B2 – Cars of which the latest major component is of a specification valid between 1 Jan 1905 and 31 Dec 1918.

C2 – Cars of which the latest major component is of a specification valid between 1 Jan 1919 and 31 Dec 1930.

D2 – Cars of which the latest major component is of a specification valid between 1 Jan 1931 and 31 Dec 1946.

E2 – Cars of which the latest major component is of a specification valid between 1 Jan 1947 and 31 Dec 1961 (up to 31 Dec 1960 for single seater and two seater racing cars).

F2 – Cars of which the latest major component is of a specification valid between 1 Jan 1962 and 31 Dec 1965 (from 1 Jan 1961 for single seater and two seater racing cars and up to 31 Dec 1966 for Formula 2).

G2 – Cars of which the latest major component is of a specification valid between 1 Jan 1966 (1 Jan 1964 for Formula 3) and 31 Dec 1971.

H2 – Cars of which the latest major component is of a specification valid between 1 Jan 1972 and 31 Dec 1976.

Period Defined Vehicles (Rally)

A car will be dated by the specification presented and not necessarily by the date of build or registration.

Historic Category 1 – Cars of a specification valid before 1 Jan 1968 that comply with R.19.1.1 or R.49.1.1.

Historic Category 2 – Cars of a specification valid between 1 Jan 1968 and 31 Dec 1974 that comply with R.19.1.2 or R.49.1.2.

Historic Category 3 – Cars homologated in Groups 1, 2, 3 or 4 between 1 Jan 1975 and 31 Dec 1981 that comply with R.19.1.3 or R.49.1.3.

Historic Category 4a – Cars homologated in Groups A, N and B between 1 Jan 1982 and 31 Dec 1985 excluding any cars that were regulated out by the FIA.

Historic Category 4b – Cars homologated in Groups A, N and B between 1 Jan 1986 and 31 Dec 1990 excluding any cars that were regulated out by the FIA.

Permit. Within these regulations a Permit is a form of written permission from Motorsport UK and includes variously Permit, Event Permit, Motorsport UK Permit, Organising Permit, Promoters Permit, Championship Permit, Attempt Permit and Exemption of Permit.

Persons. All and any, but not limited to, participants, coaches, volunteers, teams, employees and anyone involved in motor sport, whether or not they are Motorsport UK members or otherwise.

Pit Lane. That part of the track that provides competing vehicles with access to and from the pits.

Pits. An area that may be provided by the Organisers for Competitors and their authorised personnel, for the purpose of servicing competing vehicles, in accordance with the SRs, and that has direct access to the Pit Lane.

Ports (Inlet/Exhaust). Openings and passages in components forming or housing the combustion chamber and/or cylinders through which inlet and exhaust gases pass.

Practice. That part of an event intended to enable a Competitor to familiarise himself with the course. In certain events, performance during practice may be used by the Organisers to determine starting order or position. Practice is subject to all the regulations governing the event.

Practising/Training Event. An event organised for the purpose of enabling Drivers to gain experience of their vehicles. To qualify as a practising/training event there must be no element of Competition, no awards, times may be recorded but not published and cars may not be started simultaneously. There may be no revenue other than from entry fees.

Production Kit Car. A minimum of ten identical cars must have been constructed within a twelve consecutive month period. The following items must be identical on all ten cars, wheelbase, track, engine type and specification, weight at front and rear wheels, body shape and material, wheel diameter, wheel rim width. (dimensions subject to normal manufacturers' [i.e. homologation] tolerances).

Production Car Autotest. An Autotest event restricted to strictly production cars as defined in the Specific Regulations, intended to encourage newcomers to the sport.

Programme. A document prepared by the Organisers of a meeting for the purpose of informing the participants and spectators about the meeting.

Promoter. Any person or body financially responsible for a Competition. The organisation shall be the responsibility of an Organising Club.

Proprietary Equipment. Equipment marketed under a trade name that is on general sale to the public.

Protest. A formal complaint, lodged within specified time limits by an entrant or Competitor, about an act or omission by another Competitor, or about the eligibility of another vehicle.

Pump Fuel

(a) Petrol: Commercially available Motor Gasoline (see Appendix 1: Tables):

BS EN 228 (unleaded and super-unleaded).

Petrol is a product refined from crude oil that contains a large number of identifiable compounds that can typically be 250 in number. These compounds can be identified and compared to the available petrol from major oil companies and suppliers.

Unless otherwise stated or the distinction is made between leaded and unleaded petrol, the motor gasoline fuel shall meet the following: Acceptance levels for Octane Numbers will be accepted or rejected according to the Standard ASTM D.3244. Only additives to this Motor Gasoline Fuel solely for the purpose of lead replacement are allowed.

LRG (unleaded), Lead replacement gasoline (LRG also known as LRP): Only additives to unleaded motor gasoline, solely for the purpose of lead replacement, from Sodium, Phosphorous or Manganese are allowed, subject to application according to manufacturer's instructions and to the treated fuel complying with Appendix 1. Lead in excess of EU Directive 98/70 EC requirements is illegal. This also applies to 'Free Fuel'.

The addition of a lubricant on current sale is permitted in fuels for use in 2-stroke engines.

For rotary engines, a 2-stroke oil with a minimum viscosity of 5 cSt at 100°C, may be added at a maximum concentration of 0.30% (mixing ratio of 300:1).

(b) Petrol or Diesel in compliance with FIA Appendix J Art 252, Article 9. Or, for Karting, Petrol in accordance with CIK Technical Regulations Article 2.21.

(c) LPG (Liquefied Petroleum Gas) which is of 99% wt. min. hydrocarbon composition and that is entirely gaseous at atmospheric temperature and pressure. Complying with BS EN589.

(d) Diesel Automotive Gas Oil (DERV), commercially available, complying with BS EN 590 and EU Directive 98/70 EC (see Appendix 1).

(e) Bio Ethanol – Only permitted to be used with the specific approval of Motorsport UK. Specifications available from the Motorsport UK Technical Department.

(f) Bio Diesel – Only permitted to be used with the specific approval of Motorsport UK. Specifications available from the Motorsport UK Technical Department.

Motorsport UK reserves the right to amend these details to reflect any change occurring in the quality of fuel on general sale to the public in the UK.

PVG. A criminal record check in Scotland from Disclosure Scotland and more particularly the Protecting Vulnerable Groups Scheme disclosure.

Race. A Competition where two or more cars are started simultaneously from the same starting line and over the same course, and in which the winner is the Competitor who first completes a specified distance, including any handicap credit,or who completes the greatest distance in a specified time.

Racing Car. See Single-Seater Racing Car and Sports Racing Car.

Radiator/Intercooler. Mechanical part allowing for the exchange of thermal energy between two fluids (including air).

Rally. A Competition that may utilise the Public Highway and where there is an imposed average speed for Competitors, but which does not meet the requirements of a Classic Reliability Trial, Navigational Scatter event, Treasure Hunt or Road Safety Rally. The greatest speed must never form a factor for the classification. All motoring events utilising the Public Highway in England, Scotland or Wales are subject to Motor Vehicles (Competitions and Trials) Regulations. A Rally will comply with at least one of the following categories and must meet the organisational requirements laid down by Motorsport UK. The Regulations must clearly indicate the category of Rally that is being organised.

(a) *Economy Rally.* Designed to assess the fuel economy of Competitors' cars and in which the overall results are based on the relative fuel consumption of these cars.

(b) *Navigational Rally.* A Rally designed to test the navigational skill of the crew.

(c) *Road Rally.* A Rally in which the Competition on the Public Highway does not qualify for an alternative category and in which marking for maintaining a time schedule forms a substantial part of the Competition.

(d) *Single Venue Stage Rally.* A Special Stage Rally that uses parts of stages more than four times.

(e) *Special Stage Rally.* A Rally containing Special Stages joined by linking sections that may utilise the Public Highway.

(f) *Twelve Car Rally.* A Rally complying with one of the above categories that falls within the provisions of automatic authorisation under the Motor Vehicles (Competitions and Trials) Regulations (where applicable). The category must be indicated in the title of the event (i.e. Economy Twelve Car Rally, etc).

(g) *Vintage Rally (or Run).* A Rally complying with one of the above categories and restricted to vehicles built prior to 1st January 1941 (including Post- Vintage). The category must be indicated in the title of the event (i.e. Vintage Twelve Car Rally, etc).

(h) *Veteran Rally (or Run).* A Rally or Run restricted to vehicles built before 1 Jan 1919.

(i) *Historic Special Stage Rally.* As (e) above, but participation is limited to cars complying with the appropriate Technical Regulations for Historic Special Stage Rally Vehicles.

(j) *Historic Road Rally.* As (c) above, but participation is limited to cars complying with the appropriate Technical Regulations for Historic Road Rally Vehicles.

(k) *Endurance Road Rally.* A Road Rally where a substantial proportion of the Competition takes place on the highway, timed to the minute, and which shall also include Special Tests on private property which may be timed to the second.

VP Racing FUELS
DYNO-TESTED. RACE-PROVEN.
FUEL, COOLANTS, & ADDITIVES.
WHEN 2ND PLACE ISN'T GOOD ENOUGH
POWERING CHAMPIONS FOR NEARLY 50 YEARS
VP develops more than 70 proprietary blends of fuel that have powered more race winners worldwide than any brand. VP Racing also formulates an extensive line of leading-edge additives and coolants that boost engine performance, increase octane, and extend engine life.
VP R5.1
RX 102
STAY FROSTY
RACE-READY COOLANT
MADDITIVE
UNLEADED
official fuel supplier of
BRC British Rally Championship
motor sport UK
Santa Pod Raceway
IMSA
Get next day nationwide delivery on fuel for most types of motorsports.
Official UK distributor of VP Fuels www.oldhallperformance.com/VPRacing

(l) *Trophy Rally.* A supplementary event to a main rally, which may be provided by Organiser's to permit Competitors who retire from the main event, the opportunity to have further Competition. Vehicles must be re-scrutineered for conformity. Competition may only commence at a predetermined time during the event. These Competitors may run behind the main event or be re-introduced into their original seeded position, at the Clerk of the Course's discretion. Results should be displayed and awards may be presented. The intention to promote a Trophy Rally must be included within the published event regulations.

(m) *Practice/Training Rally.* A Practice Event may be promoted as a supplementary event, to permit Competitors who retire from the main event, the opportunity to gain further experience of their vehicles. The intention to provide a Practice Event must be included within the published event regulations Vehicles must be re-scrutineered for conformity. Competition may only commence at a pre-determined time during the event. These Competitors may run behind the main event or be re-introduced into their original seeded position, at the Clerk of the Course's discretion. There will be no results or awards.

(n) Targa Road Rally. A schedule timed rally where the principal competition comprises the competitor's performance on Special Tests.

Rallycross. A timed event with several cars starting simultaneously that takes place on a closed circuit with a combination of sealed and unsealed surfaces.

Rallysprint. A title reserved for special events run with the specific approval of Motorsport UK that can only take place at Motorsport UK licensed venues.

Recognised Group. A club or association that does not have individual members but consists of a number of independent clubs, registers or associations, that need not themselves be Recognised Organising Clubs.

Record. The best result obtained under the prescribed conditions.

Registered Member of a Club. Any Member of a Club, other than an Honorary Member, who has been duly elected and accepted for membership for at least 12 months or the balance of the Club's current membership year. Any form of membership that permits the holder to compete in club events, must also entitle such a member to be present and vote at General Meetings of the Club.

Regional Association. An Association of Organising Clubs that has been formed by and on behalf of the MSC.

Regulated Activity. The statutory definition of the term as set out in the Protection of Freedoms Act 2012 which in summary is teaching, training, instruction, care or supervision of Children, carried out by the same person frequently (once a week or more often), or on four or more days in a 30 day period, or overnight.

Restrictor. Any device with stated orifice and minimum thickness 3mm of non-porous material, imposed or inserted either in an inlet tract for the purpose of controlling the passage of the air/fuel mixture into the induction system and/or combustion chamber, or inserted in the exhaust tract to control the passage of exhaust gases.

Road Book or Route Card. A document supplied to Competitors instructing them how to proceed from one point to another, and containing such information as to the controls and checks that they are to visit during the event, how they will establish that they have visited checks not manned by officials, details of tests, etc.

Road Safety Rally. An event organised with the intention of promoting Road Safety and falling within the provisions of automatic authorisation under the Motor Vehicles (Competitions and Trials) Regulations (where applicable). Such events may qualify for an exemption of permit.

Road Section. Any section of the route of a Special Stage Rally (excluding control and service areas) whether on the public highway or not that links Special Stages.

Rollover Protection System (ROPS). Multi-tubular structure installed in the cockpit and fitted close to the bodyshell, the function of which is to reduce the deformation of the bodyshell (chassis) in case of an impact. (See K1 – Roll-Over Protection Systems.)

Saloon Car. See Touring Car.

Scheduled Speed. The average speed calculated from the time allowed to Competitors to cover a certain distance. In the case of highways this distance shall be that determined from 1:50,000 Ordnance Survey maps (or equivalent local maps) along the route specified by the Organisers, or if no route is specified by the shortest route.

Section. That portion of the route of a Competition between two controls, or that portion of a route of a Competition to which specific requirements apply, eg:

(a) *Standard Section.* Any section of a Rally where a penalty is imposed for late arrival or arrival before Scheduled Time.

(b) *Neutral Section.* Any section of a Rally where the Organiser must impose an early arrival penalty and, where applicable, a maximum lateness penalty and where a Competitor is supplied with supplementary information by the Organiser that requires the crew to observe special restrictions as to their driving behaviour and being a section where a Competitor may not make up time.

(c) *Observed Section.* A section of a Trial that has to be traversed non-stop to avoid penalty.

(d) *Regularity Section.* A section of a rally in which Competitors are required at all times to adhere to a set speed and in which adherence to that speed may be checked at intervals during the section. The start and finish must be clearly defined.

(e) *Transport Section.* Any section of a rally, being at least four miles in length, where no penalty is applied for early arrival, other than in accordance with R.10.5, but where applicable, a maximum lateness penalty can be applied. A section whose sole purpose is to transport Competitors between other types of section.

Series Production Car. A car of which at least 1,000 identical examples have or are being manufactured within a twelve consecutive month period.

Series Production Engine. An engine sourced from a series production car. The origin of the cylinder head and cylinder block must always be established.

Servicing. Work carried out on the car by any person, other than the competing crew, or the use of any part or tools not carried in the competing car.

Shortest Route. The shortest route between two points using only public highways, unless specific permission has been obtained for the use of private property and all Competitors so informed.

Silhouette. The outline of the original body shape, in the side and plan view, of the vehicle above a line drawn through the front and rear hubs.

Single Seater Racing Car

(a) Unless period defined, the construction of the vehicle must be symmetrical, i.e. when the vehicle is lifted laterally and weighed without the Driver, the half weight on either side must be equal to half the overall weight ±5%.

(b) It must be possible to enter or leave the Driver's seat without it being necessary to remove or detach any part of the vehicle, other than the steering wheel, side impact protection systems, including those incorporating the head rest, or seat belts/harnesses.

(c) The Driver, sitting in the driving position, must face forward.

Social Run. A non-competitive run for likeminded participants where there is no other purpose than the camaraderie of motoring in company to a predetermined point and which is not within the jurisdiction of Motorsport UK.

Solar cell. A photo voltaic element which is used to convert solar radiation into electrical energy.

Solar electrically powered vehicle. Vehicles solely propelled by the direct or indirect conversation of solar energy.

Solar module. Several solar cells making up one mechanical unit.

Space frame chassis. A structure constructed of individual tube components of any section.

Spare Wheel. A wheel with tyre suitable to be used as a replacement for one in use on the vehicle.

Specialist Production Car. A car of which at least 20 identical examples are manufactured within a twelve consecutive month period and fitted with a series production car engine.

Special Stage. A section of a Rally, on roads or land for which the event has exclusive access, or on public roads closed by Government legislation specifically permitting closure for motor sporting purposes, where the marking for maintaining a time schedule forms a part of the Competition.

Special Test. A test, permitted in road rallies which takes place off the public highway in which a Competitor is required to perform a manoeuvre or series of manoeuvres set by the Organisers. If timed, the Competitor shall not be required to exceed an average speed of 30mph or 40mph for Endurance Road Rallies. No benefit shall accrue to any Competitor exceeding the set average speed. Road Rallies with Standard Sections timed to an accuracy of less than a minute may only include a Special Test at the start of the itinerary and all competitors must complete the Special Test before midnight.

Specialist Competition Engine. An engine, other than a Series Production Engine or motorcycle engine, of four cylinders and normally aspirated, no greater than 2,500cc.

Speed Event. An event in which cars run individually, even though two or more individual runs may be taking place concurrently, over a course exceeding 200m in length and in which the relative performance of the Competitors is assessed by timing them over a given distance. The winner, or the most meritorious performer, is the Competitor who covers the distance in the least time. The term will include hill climbs, sprints, slaloms, drag races, autocross and other similar events.

Spill Kit. See Environmental Spill Kit.

Spoiler. See Aerodynamic Device.

Sponsor. A person or body making a contribution, financially or in kind, towards the promotion of a Competition or of a Competitor.

Sporting Trial. A trial in which the marking during the event is mainly based upon ability to climb hills or traverse difficult sections and in which the distance upon a highway does not exceed 50 miles.

Sports Car. A car having either a non-detachable or a detachable roof with no more than one door on each side and a minimum of two seats situated one on each side of the longitudinal centreline. The two seats must be crossed by the same transversal plane. Interior dimensions must be inferior to the minimum dimensions applicable to Touring Cars.

A minimum of 100 cars must have been constructed within a 12 consecutive month period.

Sports Racing Cars. Two-seater open or closed racing car, built for the sole purpose of taking part in races on closed circuits. Closed cars must have a windscreen and two doors (one on each side of the cockpit).

Standard Part. Is a part, the specification, features, location and method of operation of a part are as supplied when new by the motor manufacturer for the model and date of car as shown on the entry form.

Standard Pattern Part. Replacement part that has a similar form shape and features as the standard part and is made using similar materials and manufacturing processes e.g. A standard part manufactured by a non original equipment supplier that is fully interchangeable with the standard part.

Start. The start is the moment when the order to start is given to a Competitor or Competitors, or when a Competitor crosses the starting line actuating automatic timing equipment.

Starting Line. A starting line is the first control line on a course.

Sub frame. Part fastened to the bodyshell or chassis and/or ROPS to which are attached parts of the suspension and/or drive train.

Subjective Route Notes. Information relating to a Special Stage, prepared by a Motorsport UK registered supplier, which is available to all competitors in an event.

Supplementary Regulations (SRs). Compulsory document issued by the Organisers of a Competition with the object of laying down the details of that Competition.

Suspension. A person or body shall be said to be suspended when he has for a certain period been forbidden to take part in any Competition.

Suspension (Vehicle). The system(s) by which sprung movement is provided between the main chassis structure and the road wheels. Suspension will be deemed to consist of all the partly sprung components that move relative to the main chassis structure for the purpose of making connection between it and the entirely unsprung parts but not including components exclusively concerned with steering, braking and power transmission.

(a) *Suspension mounting:* the member or component attached to the chassis on which the moving element(s) of the suspension is mounted.

(b) *Suspension mounting points:* the point(s) on the chassis and the mounting that forms the centres of attachment to the chassis.

(c) *Suspension locating point:* the point in the mounting about which the suspension articulates.

(d) *Suspension bush:* considered in relation to a suspension mounting or another suspension member it may have one of two forms:

(i) a lining of an external element that rubs directly upon an inner element,

(ii) a pre-manufactured and catalogued unit within which all articulation is provided.

(e) *Suspension bush housing:* the aperture in the suspension member that supports and locates the suspension bush. In the case of the MacPherson strut top mountings the bush housing is considered to be the suspension mounting.

(f) *Sprung suspension:* a suspension system with the weight of the car supported by discrete springing media none of which may come within the definition of a 'Temporary Part'. Flexible mounting bushes are unacceptable as springing media.

Taster Event. An entry level competition where to encourage first time participation in Motorsport, participants will be deemed to be a member of the club for the day. Clubs may organise no more than one of each type of prescribed event per year to recruit new members and participants.

Telemetry. Telemetry is the means of transfer of information and/or data from a data source to a data receiver without a cable. In motor sport applications, the term telemetry usually refers to "uni-directional" transfer of data to the pits whilst the vehicle is on the circuit, without any acknowledgement signal being transmitted by the pit based equipment. "Bi-directional" telemetry, which describes and facilitates full transfer of data in both directions, is not permitted.

Temporary Part. A part that differs in type or material from that normally used on or that which has a short useful life expectancy.

Test. A Competition held on private ground, in which a Competitor is required to complete one or a series of manoeuvre as laid down by the relevant instructions (see also Autotest).

Hot Lap Challenge. A Hot Lap Challenge is run over a number of sessions to determine the competitor (in class) completing the fastest lap time. Drivers are not competing against each other but against the clock and in a manner equivalent to a timed qualifying session. By display of their headlights drivers indicate they are attempting their flying lap (hot lap). Overtaking should only be carried out on the left.

There will be: Warm-up, Practice, Qualifying and Final. These Sessions are always open Pit Lane and can vary from 15 minutes to 20 minutes per Session.

After the Warm Up (untimed) and Practice sessions the main segments of the day are the Qualifying and the Final. All Classes will participate in the Qualifying Sessions. The cars to go forward into the Final will be confirmed in the SRs. The overall winner will be declared as that driver who has posted the quickest lap time in the Final.

Organisers reserve the right to split/amalgamate classes at their discretion in all sessions.

Session 1 – Warm Up – will be untimed.

Session 2 – Practice – will be a timed session.

Session 3 – Qualifying – will be a timed session. The fastest drivers will proceed into Session 4 the Final. The number of competitors proceeding to the final will confirmed in the Final Instructions.

Session 4 – The Final.

Time Card. A document upon which the time of a Competitor's arrival at or departure from a Control is recorded. A time card may or may not be incorporated in a Road Book or Route Card.

Touring Assembly. An activity organised with the primary object of assembling tourists at a point determined beforehand.

In a Touring Assembly:

(a) a prescribed route may have to be followed

(b) pre-arranged points may be provided for in the event's itinerary

(c) no limits of speed may be laid down

(d) no requirement to visit prearranged points, other than a requirement to report at a final point not later than a specified time, are permitted

(e) no awards of any description, other than those in relation to activities arranged at the finishing point may be made or given.

Where any or all of the above points become a mandatory part of the itinerary the Event will be subject to the requirements of Route Authorisation (Motor Vehicles (Competitions and Trials) Regulations).

The Regulations for the event must be clearly endorsed 'Touring Assembly', and before publication the consent in writing of Motorsport UK and its approval of the regulations for the Touring Assembly have first been obtained, by issue of a Certificate of Exemption, and where the route runs through the territory of an ASN other than Motorsport UK, that R.1.3 of these Regulations has been complied with.

The programme of a Touring Assembly may include additional events (other than speed) provided that they are held only at the place of final assembly.

No prize money may be allocated in respect of Touring Assemblies.

Touring Car. Series Production cars of which at least 2,500 identical examples are, or have been manufactured, within a twelve consecutive month period and which are equipped with a minimum of four adult size seats, an integral non-detachable roof, a minimum of two doors, one on each side of the vehicle and meet the dimensional requirements shown in K Appendix 2, Drawing No. 61.

Track (other than a Special Stage). That part of a course that may have a sealed or unsealed surface, that is designated to be used by Competitors. Its boundary may be the edge between its surface and the adjoining ground or a dotted or continuous painted line on a sealed surface, or as indicated by markers.

Track Licence. The written approval of a track by the FIA or the CIK-FIA (International Track Licence) or by the Motorsport UK (National Track Licence).

Traction battery. The collection of all battery packs which are electrically connected for the supply of energy to the power circuit.

Treasure Hunt. An event involving the solving of certain problems in which the use of a car is merely incidental as a means of transport and the skill or experience of a Driver plays no part. If the event utilises the Public Highway, it shall be run in accordance with the Motor Vehicles (Competition and Trials) Regulations. Such events may qualify for an exemption of permit.

Trial. A number of tests on private ground with the object of bringing the car to an involuntary stop.

Trucks. Two-axle road tractors, with a minimum production of 50 units during any 12-month period, duly certified by an official document from the manufacturer. The general shape of the tractor unit must correspond to the shape of a road-going tractor unit homologated for the transportation of merchandise.

Unitary Construction. A vehicle construction method whereby metal and/or composite materials are welded, riveted or bonded into a single structure to form both chassis and bodywork as a single structure.

Venue. The whole area or areas used for an event under the control of the organising club and/or venue owner(s).

Vulnerable People. Any adult who may have difficulty in protecting themselves from harm and/or abuse and in promoting their own interests.

Wheel. Flange and rim. By complete wheel is meant flange, rim and tyre.

Windscreen. A rigid transparent shield located in front of vehicle occupants to protect from the wind and airborne particles.

World Record. A record recognised by the FIA as the best performance irrespective of class.

Appendix 1: Tables

PUMP FUEL – MOTOR GASOLINE

	BS EN 228 (Unleaded)	Test
MON (max)	89.0	EN ISO 5163
RON (max)	100.0	EN ISO 5164
Oxygen % (max)	3.7% w/w	Elemental
	LRG (Unleaded)	**Test**
MON (max)	89.0	EN ISO 5163
RON (max)	100.0	EN ISO 5164
Lead (max) g/l	0.005	ASTM D3341/IP362/EN 237
Oxygen % (max)	2.7% w/w	Elemental

Certain of the above values are additional to those specified in the standards referred to.

PUMP FUEL – DIESEL

	BS EN 590	Test
Density 15˚C kg/m^3 (max)	**845**	**EN ISO 3675/EN ISO 12185**
Cetane Number (max)	**60**	**EN ISO 5165/EN 15195**
Calculated Cetane Index (max)	**60**	**EN ISO 4264**
Sulphur Content mg/kg (max)	**10**	**EN ISO 20846/EN ISO 20884**

At the discretion of Motorsport UK the maximum Cetane and calculated Cetane numbers may be increased to 70.0 for national competitions/Championships

DON'T RISK YOUR ENGINE!

Designed for racing to maximise the potential of engines. Sunoco and the R racing fuels have over 70 years of experience in producing high quality, consistent race fuels, ranging from 98 to 120 octane.

Anglo American Oil Company stock a huge range of unleaded and leaded racing fuels that confirm to MSA and FIA regulations including; ethanol and bio-fuels, custom blends and control fuels.

The Driven Racing Oil range of lubricants are no compromise race oils designed to maximise reliability and performance, whilst minimising wear at the same time. Available from 0W to 10W-60, mineral, semi-synthetic or fully synthetic engine oils, and mineral or synthetic gear and transmission fluids.

For technical advice, or to place and order, call us on 01929 551557, or visit www.aaoil.co.uk

DRIVEN RACING OIL — DRIVEN TO WIN

We deliver to your door

SUNOCO RACE FUELS

Anglo American Oil Company

+44 (0) 1929 551557 www.aaoil.co.uk

Appendix 2: Specific definitions for Electrified Vehicles

General definitions for Electric and Hybrid Vehicles are according to FIA Appendix J – Article 251 (which can be found at www.fia.com) unless where stated otherwise.

Auxiliary battery. Definition according to Appendix J – Article 251-3.1.19.1

Auxiliary circuit. Definition according to Appendix J – Article 251-3.1.19

Auxiliary ground. Definition according to Appendix J – Article 251-3.1.19.2

Basic insulation. Definition according to Appendix J – Article 251-3.1.14.1.b

Battery cell. Definition according to Appendix J – Article 251-3.1.7.6

Battery Management System (BMS). Definition according to Appendix J – Article 251-3.1.7.8

Battery module. Definition according to Appendix J – Article 251-3.1.7.5

Battery pack. Definition according to Appendix J – Article 251-3.1.7.4

Capacitor. Definition according to Appendix J – Article 251-3.1.7.2

Clearance. Definition according to Appendix J – Article 251-3.1.12

Conductive part. Definition according to Appendix J – Article 251-3.1.17

Creepage distance. Definition according to Appendix J – Article 251-3.1.13

DC-DC Converter. An electronic device whose function is to regulate multi-level voltage outputs for use by the electrical and electronic components of the car and power unit.

Double insulation. Definition according to Appendix J – Article 251-3.1.14.1.c

Driver Master Switch. Definition according to Appendix J – Article 251-3.1.20

Electric chassis ground, vehicle ground and earth potential. Definition according to Appendix J – Article 251-3.1.15

Electric Generator. Definition according to Appendix J – Article 251-3.1.23

Electric Motor. Definition according to Appendix J – Article 251-3.1.22

Electric Shock. Definition according to Appendix J – Article 251-3.1.8

Electric Vehicle Passport (EVP). The EVP is the EV equivalent of the existing CCLB/VP for internal combustion engine powered vehicles.

Electrified Vehicles (EV). All forms of Electrified Vehicles (including those defined in FIA Appendix J – Article 251): Electric Road Vehicle/Battery Electric Vehicle (BEV), Hybrid Electric Vehicle (HEV), Full Hybrid Electric Vehicle (FHEV), Plug-in Hybrid Electric Vehicle (PHEV) and mild Hybrid Electric Vehicle (mHEV)

Energy Recovery System (ERS). A system that is designed to recover energy from the car, store that energy and make it available to propel the car and, optionally, to drive any ancillaries and actuation systems necessary for its proper function.

Exposed conductive part. Definition according to Appendix J – Article 251-3.1.18

General circuit breaker (emergency stop switch). Definition according to Appendix J – Article 251-3.1.14.3

Insulation. Definition according to Appendix J – Article 251-3.1.14.1.e

IP65. Ingress Protection code. 6 dust tight, 5 protection from water jets.

Live part. Definition according to Appendix J – Article 251-3.1.16

Main ground point. Definition according to Appendix J – Article 251-3.1.15.1

Material Safety Datasheet (MSDS). A MSDS is a document that contains information on the potential hazards (health, fire, reactivity and environmental) and how to work safely with the chemical product.

Maximum working voltage. Definition according to Appendix J – Article 251-3.1.9

Overcurrent trip (fuses). Definition according to Appendix J – Article 251-3.1.14.2

Power bus. Definition according to Appendix J – Article 251-3.1.14.1

Power circuit. Definition according to Appendix J – Article 251-3.1.14

Power circuit ground. Definition according to Appendix J – Article 251-3.1.14.5

Power Unit. The engine, complete with its ancillaries, the energy recovery system and all actuation systems necessary to make them function at all times.

Rechargeable Energy Storage System (RESS). A RESS, using batteries, is a system that is designed to propel the vehicle via the electric motor and recover electric energy from the grid or from the on-board generator. The RESS comprises all components needed for the normal operation of the RESS.

Reinforced insulation. Definition according to Appendix J – Article 251-3.1.14.1.d

Safety indications. Definition according to Appendix J – Article 251-3.1.21

Service Disconnect. See service switch

Service Switch. Definition according to Appendix J – Article 251-3.1.14.6

Traction Battery. Definition according to Appendix J – Article 251-3.1.7.3

Traction Circuit. The Traction circuit includes the ES, its safety management, the inverter, the MGU and all parts in the higher voltage side of the DC/DC converter.

Types of insulation of cables and wires. Definition according to Appendix J – Article 251-3.1.14.1.

UL 94. The Standard for Safety of Flammability of Plastic Materials for Parts in Devices and Appliances testing is a plastics flammability standard released by Underwriters Laboratories of the United States. The standard determines the material's tendency to either extinguish or spread the flame once the specimen has been ignited. UL-94 is now harmonized with IEC 60707, 60695-11-10 and 60695-11-20 and ISO 9772 and ISO 9773.

UN38.3. The United Nations Regulations on the transport of lithium batteries: UN Manual of Tests and Criteria, 4th Revised Edition, Lithium Battery Testing Requirements.

Voltage class B. Definition according to Appendix J – Article 251-3.1.10

CONVERSION TABLES

Distance

1 mile = 1760 yards
1 kilometre = 1000 m
1 yard = 3 ft
1 metre = 100 cm
1 foot = 12 in
1 centimetre = 10 mm
1 inch = 2.54 cm
1 foot = 30.48 cm
1 yard = 91.44 cm
1 mile = 1.609344 km
1 millimetre = 0.03937 in
1 centimetre = 0.3937 in
1 metre = 39.37 in
1 kilometre = 0.62137 miles

Weight

1 ton = 2240 lbs
1 tonne = 1000 kg
1 stone = 14 lbs
1 kilogram = 1000 gr
1 pound = 16 oz
1 ounce = 28.35 gr
1 pound = 454 gr
1 stone = 6350 gr
1 ton = 1016.05 kg
1 gram = 15.43 grains
1 kilogram = 2.205 lbs
1 zentner = 110.23 lbs
1 tonne = 0.984 ton

Fluid

1 gallon = 4 qts
1 litre = 10 dl
1 quart = 2 pints
1 litre = 1000 ccs
1 pint = 20 fl ounces
1 cc = 1 ml
1 fl ounce = 0.028 l
1 pint = 0.568 l
1 quart = 1.136 l
1 gallon = 4.546 l
1 cc = 0.061 cu ins
1 litre = 61.026 cu ins
1 litre = 1.760 pints
1 litre = 0.22 galls

Distance per Capacity

1 mile per litre = 4.5 mpg
1 km per litre = 2.824 mpg
100 km per litre = 282.4 mpg

Temperatures

Celsius		Fahrenheit
–5	=	23
0	=	32
5	=	41
10	=	50
15	=	59
20	=	68
25	=	77
30	=	86

Speed

KPH		MPH
50	=	31
80	=	50
100	=	62
150	=	93
200	=	124

MPH		KPH
25	=	40
50	=	80
70	=	112
100	=	161
150	=	241

Fluid weights

Water	10 lbs per gallon	1.0 kg per litre
Petrol	7.4 lbs per gallon	0.74 kg per litre
Diesel	8.3 lbs per gallon	0.83 kg per litre
LPG	5.2 lbs per gallon	0.52 kg per litre

Pressures

atu		psi
0.25	=	3.56
0.50	=	7.11
1.00	=	14.23
2.00	=	28.46
5.00	=	71.15

Power

Horsepower:
1hp = 0.7457kW 1ps = 0.7354kW
1kW = 1.341ps 1kW = 1.3625hp

Torque:
1lbs ft = 1.3559 Nm
1Nm = 0.7375lbs ft

(C) Judicial

General

1.1. Each of the following, in addition to any offences specifically referred to elsewhere within these Regulations, is a breach of these Regulations and/or Supplementary Regulations and will lead to disciplinary action being taken.

1.1.1. Bribery or attempt, directly or indirectly, to bribe any person having official duties in relation to an event or employed in any manner in connection with an event or acceptance of or offer to accept a bribe by an official or employee.

1.1.2. Any action having as its object the entry or participation in an event of:

(a) A vehicle ineligible therefor

and/or,

(b) A person who is not the holder of a licence appropriate to the event concerned.

1.1.3. Any dishonest act or proceeding in connection with an event and/or motor sport generally.

1.1.4. Any proceeding and/or act prejudicial to the interest of the ASN and/or motor sport generally.

1.1.5. Driving in a manner incompatible with general safety, and/or departing from the standard of a reasonably competent driver.

1.1.6. Any contravention of Flag or Light Signals (Q.12.24).

1.1.7. Any contravention of these Regulations in respect of alcohol or doping or illicit drugs and testing in respect thereof.

1.1.8. Misbehaviour or unfair practice.

1.1.9. Abusive language or behaviour, physical assault, or threats of physical assault within the area under control of the Organising Club.

1.1.10. Deleted.

1.1.11. For any competitor to bet on an event for which he has an entry.

1.1.12. For any person involved in an event whether as competitor, official or organiser:

(a) to make use of information which can properly be regarded as privileged for the purposes of obtaining or endeavouring or attempting to obtain financial gain whether directly or indirectly by or from betting.

(b) to fail to disclose to Motorsport UK any information relating to the commission of any offence under (a) above.

(c) to withhold information relating to the commission of any offence under (a) above when requested to disclose such information by Motorsport UK.

1.1.13. Dishonored Payments. Failure to honour a payment to Motorsport UK, or to a Recognised Club or Event Organiser, will result in suspension of Licence until payment of the full amount, plus charges, has been made.

1.1.14. Persons Excluded Elsewhere

Any person excluded or suspended by the Governing Body of any other sport recognised by Motorsport UK shall be reported to the National Court and in the event that the reason for such excluded or suspension would, had the matter involved these Regulations, be a breach of these Regulations then the National Court shall be entitled to impose any penalty as it would have done had the breach occurred under these Regulations.

Disciplinary Officer

1.2. Motorsport UK will appoint a Disciplinary Officer whose function will be to advise whether disciplinary action should be taken by Motorsport UK in respect of any breach of Regulations. In the event that Motorsport UK decides to take action, the Disciplinary Officer will either prepare and present the case personally, or arrange independent legal representation. The Disciplinary Officer will personally represent or instruct someone on his behalf to represent Motorsport UK on all other matters before the National Court where it is considered appropriate.

Penalties

2.1. Any Promoter, Organiser, Official, Entrant, Competitor, Passenger, Driver, Mechanic or other Person committing a breach of these Regulations or of any conditions attached to an organising Permit, or of any Instruction to Competitors, or of any special Track Rules may be penalised as hereinafter provided.

2.1.1. The penalties that may be inflicted are, in order of increasing severity, as follows:

(a) Reprimand (2.4).

(b) Fine (2.4).

(c) Time Penalty (or Position/lap Penalty – Karts or Endurance Racing or Grid Place Penalty – Circuit Race) (2.3) or qualifying lap time(s) disallowed (Q12.27).

(d) Disqualification (2.5).

(e) Suspension (2.6).

(f) Exclusion (2.7).

One or more of the above may be imposed as appropriate.

2.1.2. The National Court may also, in addition to any penalty:

(a) Declare the results of an event null and void.

(b) Order the return of any awards, or annul championship points.

(c) Order the return of all, or part of Entry Fees.

(d) Order the downgrading of any Motorsport UK licence. Once downgraded such licence may be upgraded by fresh signatures alone.

(e) Impose such other conditions as it thinks fit.

Note: Throughout these sections an asterisk(*) indicates a requirement for additional information to be printed in the Supplementary Regulations (SRs). Text shown in Italics indicate a Regulation which may be amended in the SRs. Text shown in red indicates a new or amended regulation for 2022.

2.1.3. Suspension of Penalty. The National Court may, at its sole discretion, order that any of the penalties detailed in 2.1.1 be suspended for a specified period of time. Should the competitor be found guilty of a subsequent offence, details of that offence will be forwarded to the MSC for the National Court to consider whether the suspended sentence should be activated in addition to any penalty imposed for the subsequent offence.

2.1.4. When a penalty that incurs penalty points is imposed by the Clerk of the Course, or the Stewards of the Meeting, details must be recorded on the Judicial Summary Sheet together with the number of penalty points imposed.

2.1.5. Penalty points will be imposed for the following offences:

(i) Driving – breach of 1.1.5, Q.12.18, Q.12.21 (with the exception of Q12.21.2.), Q.12.23 and/or

(ii) Failure to comply with flag or light signals

(iii) General Conduct – Abuse, physical assault or threats of physical assault. Refusal to obey the instructions of an Official.

2.1.5.1. For Short Circuit Karting only 2.1.5(i), driving, and 2.1.5(ii), failure to comply with flag or light signals does not apply.

2.1.6. 'Stop-Go' or 'Drive Through' penalties (Q12.26), are not subject to penalty points and neither is there any right of appeal against either the decision for imposing the penalty or the penalty itself. This includes any such penalties converted to time penalties in accordance with Q12.26(h).

2.1.7. The number of points will be determined not by reference to the type of offence but by reference to the type of penalty imposed.

(i) Verbal warning – 0 points (not recorded on licence)

(ii) Formal written reprimand – 2 points

(iii) Fine, Time, Grid Place or Position/lap penalty – 3 points

(iv) Disqualified from practice, heat, race or an event – 4 points

(v) Disqualified from the meeting – 6 points.

2.1.8. Should a competitor receive twelve penalty points within a period of twelve months, it will result in the suspension of his licence for three months, in addition to any other penalty imposed. Subject to 2.1.10 once the period of suspension is complete the penalty points relied on for suspension will not count further under this regulation.

2.1.8.1. For Short Circuit Karting a competitor who receives three recorded, non-technical, penalties within twelve months will receive a formal warning issued by Motorsport UK. Should the competitor, within three months of the formal warning receive any further, non-technical, penalty this will result in the suspension of his licence for three months, in addition to any other penalty imposed. This does not however remove the provision of 2.1.8 being imposed for points accrued in accordance with 2.1.5(iii).

2.1.9. Any competitor whose licence is suspended may request a hearing before the National Court to show why his licence should not be suspended, or should be suspended for a lesser period than three months. Initially, such a request, containing a brief statement of the grounds for the request, and accompanied by the appropriate non-refundable fee as set out in Part 3, Appendix 1, must be submitted in writing to Motorsport UK Disciplinary Officer to be received within 10 days from the date of the Motorsport UK letter giving written confirmation of the suspension of the licence. The submission of such a request will not affect the Suspension, which will remain in force pending the decision of the National Court.

2.1.10. The National Court shall have no jurisdiction to consider the competitor's guilt in respect of the offences detailed in the relevant endorsements. The competitor must show that the consequences of a suspension will cause exceptional hardship meriting his licence not being suspended at all, or for a lesser period than three months.

The National Court may uphold the suspension, impose a lesser period of suspension or remove the suspension and impose an alternative penalty to suspension.

2.1.11. For short circuit kart race meetings all judicial duties are defined in U21.

2.2. Variation to Judicial Procedures. By sanction of Motorsport UK the Regulations for the British Touring Car Championship are permitted to vary the judicial procedures in respect only of driving offences contrary to General Regulation 1.1.5 or 1.1.6 in order that:

(a) Penalties not referred to in the these Regulations may be imposed.

and/or

(b) The structure of Appeals and consequential procedures permitted by the applicable Regulations for the Championship may be varied from that contained in these Regulations.

2.2.1. In the above event the current British Touring Car Championship Regulations will replace the part or parts of these Regulations that have been varied.

2.3. Time or Place Penalty (G.5.3). Time penalty means a penalty expressed in minutes and/or seconds.

The Clerk of the Course, or the Stewards of the Meeting, may impose a penalty for any competitor considered to have obtained an unfair advantage (whether inadvertently or not):

(a) A time penalty of up to one minute or a place penalty of up to 10 places.

(b) In an Endurance Race (Q.9.1) or a race including a mandatory pit stop, a time, place or lap penalty may be imposed. The penalty may be increased by one minute for each scheduled racing hour, (for example a 2 hour race may impose a penalty of up to two minutes). The penalty may be imposed after the race has finished.

2.3.1. At short circuit kart races, where a licensed timekeeper is not present a time penalty cannot be applied, but a competitor may be moved back up to five places in the results in lieu of a time penalty. Where a licensed timekeeper is present either a time penalty or place penalty may be imposed. Any such penalty, in line with the karting mandatory penalties, is not eligible for appeal against either the decision for imposing the penalty or the penalty itself.

2.3.2. At short circuit kart race meetings a competitor, who is deemed to have gained an unfair advantage or has disadvantaged another competitor by the manner of his driving will be penalised by a time penalty of up to 10 seconds, or a Position Penalty of up to 5 places, or 1 lap, in the results of that race or timed qualifying, and such penalty is not eligible for appeal against either the decision for imposing the penalty or the penalty itself. This penalty does not preclude further action under 1.1.5. if deemed necessary after the hearing.

At short circuit kart race meetings a competitor with the front fairing not affixed precisely in accordance with U17.5.5 when he arrives in Parc Ferme will be penalised with a 5 second penalty (3 places if there is no licensed Timekeeper) in the results of that Race or, if during timed qualifying, deletion of their fastest lap time. This will be imposed automatically by the Clerk of the Course upon receipt of the statement received from the Judge of Fact and is not eligible for appeal against either the decision for imposing the penalty or the penalty itself. This penalty does not preclude further action under 1.1.5 if deemed necessary. The mechanical failure flag will not be shown to a driver whose front fairing is no longer in the correct position.

2.3.2.1. Where the Clerk of the Course has the ability to validate incidents during the race, via circuit cameras with a nominated Judge of Fact, an in race 5 second time penalty may be applied. This should usually follow the display of a warning flag and will not be subject to protest or appeal.

2.3.3. At Race meetings, up to a 10 Grid Place Penalty may be applied at a driver's future Race, only where that penalty can be applied during that Meeting or the contested Championship or Series.

2.3.4. At Short Circuit Kart Race meetings, a competitor with the front fairing not affixed precisely in accordance with U17.5.5 when he arrives in Parc Ferme will be penalised with a 5 second penalty (3 places if there is no licensed Timekeeper) in the results of that race or, if during timed qualifying, deletion of their fastest lap time. This will be imposed automatically by the Clerk of the Course upon receipt of the statement received from the Judge of Fact and is not eligible for appeal against either the decision for imposing the penalty or the penalty itself. This penalty does not preclude further action under 1.1.5 if deemed necessary.

The mechanical failure flag will not be shown to a driver whose front fairing is no longer in the correct position.

2.4. Sentence to a Reprimand or a Fine. A reprimand or a fine may be imposed by the Clerk of the Course, the Stewards of a Meeting or the National Court, provided that any fine imposed shall not exceed the amount specified in Part 3, Appendix 1.

2.4.1. Time Limit for Payment of Fines. Fines or Costs must be paid within 7 days of being imposed. Any delay in making payment may result in suspension of licence for the period during which the amount remains unpaid, beyond the said period of 7 days.

2.4.2. Liability to Pay Fine and/or Costs. Where an Entrant is responsible for the payment of any fine and/or costs, then in the event of nonpayment, they the Entrant can be suspended in the same way as the person on whom the fine or costs have been levied.

2.4.3. Allocation of Proceeds from Fines. The proceeds from all fines are remitted to Motorsport UK who will use them only for the provision of prizes, training, or for charitable purposes.

2.5. Sentence of Disqualification. A sentence of disqualification from all or part of an event can be imposed by the Clerk of the Course, the Stewards of the Meeting or the National Court. This can be imposed retrospectively.

2.6. Suspension. A person, body, vehicle or make of vehicle shall be said to be suspended when forbidden, by the National Court and Motorsport UK exceptionally under 2.6.2 or 2.6.3 by the Stewards of the Meeting, to take part in any competition for a stated period. The National Court may, at its discretion, restrict the suspension to certain categories or types of event.

2.6.1. Except as provided for in H.26.1.9 (c) and (f), Suspension renders void entries made for any Event taking place during the Suspension, and any entry fee paid or payable will be forfeited to the Organising Club (unless the SRs for the specific Event stipulate otherwise [H.31.1.2.(e)]) and the Competitor concerned shall immediately return his licence to Motorsport UK.

2.6.2. For offences involving abusive language or behaviour, physical assault or threat of physical assault, the Stewards of the Meeting after holding an enquiry can impose an immediate suspension of licence for up to 30 days. On imposing such a sentence, the Stewards should confiscate the Licence of the person concerned which will be forwarded to Motorsport UK, together with a report on the enquiry. The matter may then be considered by the National Court, who can impose a further penalty if appropriate.

Where Stewards of the Meeting are satisfied that a physical assault or a threat of physical assault has occurred, then no appeal against their sentence (either the decision for imposing the suspension or the suspension itself) is allowed.

2.6.3. If the Stewards of the Meeting, after holding an enquiry, are satisfied that a contravention of 1.1.5 was of a serious nature, and the maximum penalty of 30 days is imposed, the matter may also be referred by Motorsport UK to the National Court, who may impose a further penalty.

2.6.4. Delay in handing in a licence in accordance with 2.1.8, 2.6.2 or 2.6.3 will automatically result in the extension of the suspension by a period equal to the delay.

2.7. Exclusion. The penalty of exclusion should be reserved for exceptionally grave offences. Any excluded person, body, vehicle or make of vehicle is permanently forbidden by the National Court to take part in any competition whatsoever, nationally and internationally.

Details will be notified to the FIA.

2.7.1. Exclusion renders void any previous entry made for any competition, and any entry fee paid or payable will be forfeited to the Organising Clubs, (unless the SRs for the specific event stipulate otherwise [H.31.1.2(e)]).

2.7.2. All excluded Licencees must immediately return their licences to Motorsport UK.

2.8. Suspension or Exclusion of a Make of Vehicle. The National Court can suspend a make of vehicle within its own territory for breach of these Regulations by the manufacturer or his accredited representative, or for reasons of safety.

2.9. Reciprocity of Penalties. Motorsport UK will not issue a licence and will withdraw any licence already issued to any person who is suspended or excluded by either the Auto-Cycle Union or the Speedway Control Board (subject to right of appeal to the National Court).

2.10. Loss of Award. Any competitor disqualified, suspended or excluded in any event shall thereby forfeit all right to any award in that event.

2.10.1. Amendment of Placing and Awards. In such cases the resulting amendment to the placings and awards will be published and the body imposing the penalty will decide whether the next competitor(s) in order (after those placed) shall be advanced.

2.11. Publication of Penalty. Every licence holder is deemed to agree that the FIA, Motorsport UK and the National Court all have the right to publish details of any decision of the National Court, penalised persons, bodies, vehicles or makes of vehicle, and if it so desires, the reasons therefore. Those individuals and bodies referred to have no right of action against the FIA, Motorsport UK or the MSC, or against any printer or publisher of the information, and may incur further exclusion if any such action is taken.

2.12. Remission of Penalty. The National Court has the right to remit any unexpired term of a suspension or exclusion, as it may think fit. Requests for remission of sentence must be submitted in writing to the National Court, accompanied by a non-returnable fee as detailed in Part 3, Appendix 1. Whenever possible, the same Court which applied the original penalty will deal with the application and entirely in writing, with no right to an oral hearing.

Technical Eligibility Checking

3. Technical Eligibility Checking

3.1. Whenever possible any eligibility inspection should be by two members of the Technical Commission, or by the Chief Scrutineer of the event and one member of the Technical Commission. They will then be considered as Eligibility Judges of Fact.

3.1.1. If the Eligibility Judges of Fact agree that the vehicle or component is ineligible, this will be reported to the Clerk of the Course (or the Championship Stewards where the Clerk of the Course has no championship function) who, after giving the parties the opportunity to be heard, will disqualify the vehicle from the relevant results unless there are exceptional reasons why this should not be done.

This Regulation does not preclude a Scrutineer reporting a vehicle as being ineligible to the Clerk of the Course (or the Championship Stewards where the Clerk of the Course has no championship function). They will take appropriate action.

3.1.2. The findings of the Eligibility Judges of Fact or the Scrutineer, as the case may be, will also be reported to Motorsport UK who may take further action, including referring the matter to the National Court.

3.2. If a vehicle or component is not made available for an eligibility examination as required by the Technical Commissioners, the Clerk of the Course, the Championship Organisers or their respective Stewards, or a Competitor declines to accept potential liability for stripping, examination and rebuilding costs, the vehicle or component will be deemed ineligible and reported to the Clerk of the Course or the Championship Stewards, as the case may be, for the application of the penalties as detailed in 3.5.1 or 3.5.3.

3.3. Any vehicle found ineligible after practice, but subsequently approved before a race, will have all its practice times disallowed. The Clerk of the Course may Permit it to start from the back of the grid with a 10 second delayed start, providing that it does not take the place of any vehicle already qualified (whether a reserve or not). Penalties laid down in 3.5.1 or 3.5.3 would not be applied (Q.12.4.2, Q.12.9.4).

3.4. Competitors whose vehicles are subject to a pending eligibility check must advise this fact in writing to the Clerk of the Course of any event in which they wish to take part. The results of any such event will remain provisional until the eligibility decision has been made. Failure to inform the Clerk of the Course will result in a fine as detailed in Part 3, Appendix 1.

3.5. In the event of a vehicle being declared ineligible for a Championship, all Race or Kart Championships will apply the penalties as detailed in 3.5.1 and all other Championships as detailed in 3.5.3. Penalties may be applied even if a Competitor has retired from an event. Motorsport UK may insist on additional conditions being included in Championship Regulations.

3.5.1. Unless the regulations for a Championship specify a different penalty, any Competitor in a Race or Kart Championship whose vehicle is disqualified from the results in accordance with 3.1.1 or 3.1.2, will be subject to the following Championship penalties. These will be applied whether the Championship is for Drivers, Entrants or manufacturers.

(a) The event will be counted as one of the events contributing to their total Championship score and

(b) The Competitor will be disqualified from the event, forfeiting all Championship points, prize money and other awards and

(c) The Competitor will forfeit a total of points equal to those obtained from two first places, even if this penalty results in a minus total of points.

3.5.2. The penalty imposed under 3.5.1(c) can only be waived by the National Court on Appeal, but the Secretary of the Meeting, the Clerk of the Course, or their deputies, must be notified of the Intention to Appeal (7.1.4). This penalty will only be waived in exceptional circumstances. Championship Co-ordinators do not have the power to decide whether a penalty should be applied or waived.

3.5.3. Any Competitor taking part in a Championship (other than Racing and Karting) for Drivers, co-Drivers, Entrants or manufacturers, whose vehicle is declared ineligible in accordance with the Championship Regulations will be penalised as follows:

(a) They will score zero points for that round and

(b) The round will count as one of the events contributing to their total Championship score.

These penalties may not be decreased, but may be increased, by the Championship regulations which can only be applied by the Championship Stewards after a hearing. Penalties imposed can be appealed to the National Court, but the Championship Stewards must be informed of the Intention to Appeal in accordance with 7.1.4 Penalties will only be reduced in exceptional circumstances.

3.5.4. Deleted.

3.5.5. A special procedure as detailed in 7.2 applies in respect of any Appeal against an Eligibility decision (including the application of 3.5.1(c)).

Fuel and Tyre Checking

4.1. Fuel Checking. It shall be an offence to use fuel which does not comply with the fuel specification laid down in the Technical Regulations, or the SRs for the Event (or Championship).

4.2. The analysis of a laboratory on the UKAS list in respect of the Motorsport UK fuel sample, or by an approved comparison test, will be taken as a finding of fact.

4.2.1. The provisions of 3.5 will apply in the case of fuel found to be ineligible and additional penalties may be applied by an MSC Tribunal.

4.3. Tyre Checking (Karting)

It shall be an offence to use a tyre which does not comply with the tyre specification laid down in the Technical Regulations, or the SRs of the Event (or Championship).

4.3.1. The analysis of a laboratory on the UKAS list (or a laboratory approved by another ASN in respect of U20.3.4.) or by a Motorsport UK approved comparison test, will be taken as a finding of fact.

4.3.2. The provisions of 3.5 will apply in the case of a tyre or tyres found to be ineligible (in accordance with U20) and additional penalties may be applied by an MSC Tribunal.

Protests

5.1. Protest Against a Fellow Competitor

The right to protest lies solely with the Entrant or Competitor who is a party to a dispute about an act or omission of another Competitor in an event in which they have taken part. At International Events, only the Entrant can lodge a protest, unless the Competitor produces written authorisation to act on behalf of the Entrant.

5.1.1. The Clerk of the Course, acting in his official capacity, may take such action as he may deem proper in any circumstances regardless of whether a protest has been lodged.

5.1.2. Every protest, which must be in writing, must include the grounds for the protest, must be signed by the party making the protest, and accompanied by the payment laid down in Part 3, Appendix 1. 13. It must be lodged with the Secretary of the Meeting, the Clerk of the Course, or their deputies (G.3.2), within the appropriate time limit.

Where facilities exist for immediate payment by electronic transfer of funds of the above fees, then payment by such method is acceptable.

5.1.3. A single protest lodged by more than one competitor, or a single protest against more than one competitor, will not be accepted but more than one individual protest may be accepted on the same grounds.

5.2. Time Limit for Protests

5.2.1. A protest against another Competitor must be made within 30 minutes of the finish of the competition.

5.2.2. A protest against the eligibility of any vehicle, or part of vehicle:

(a) When the reason for the alleged ineligibility is apparent – within 30 minutes of the time laid down for conclusion of the relevant scrutineering session;

(b) When the reason for the alleged ineligibility is not apparent, but it is alleged that the vehicle is performing in a manner which suggests that it is ineligible, or if a part or parts may have been changed after scrutineering – within 30 minutes of the performance that gives rise to the protest.

5.2.3. The Clerk of the Course may amend the above time limits if he thinks that the circumstances make the lodging of a protest physically impossible within the time quoted. If he decides to deal with a protest 'out of time', by doing so he will be deemed to have extended the time limit.

5.3. In the event of a protest against the eligibility of a vehicle or engine, the Clerk of the Course shall order that the vehicle or engine will immediately be examined or, on the request of the competitor protested against, or the Technical Commissioner or Scrutineers, sealed for subsequent examination (J.3.1.5).

5.3.1. The Technical Commissioner or Scrutineer sealing the vehicle or component shall furnish the Clerk of the Course, and the Competitor, with details of the seals used, their number and position.

5.3.2. The sealing of any vehicle or component shall be carried out in the presence of the Competitor protested against.

5.3.3. In default of agreement between the parties, the Clerk of the Course, in consultation with the Stewards of the Meeting will determine a realistic estimated cost of stripping and re-assembling the car/component. This sum is to include the Motorsport UK Technical Commissioner's fee as set down in Part 3, Appendix 1 as a maximum figure to cover inspection costs. Unless the car/component can be examined immediately, the amount of this estimated cost must be deposited with Motorsport UK by the protester within 7 days, and no examination will commence until it has been received. Failure to lodge the said amount within the time limit will result in the protest lapsing.

5.3.4. The Clerk of the Course will ensure that arrangements are made for the equipment to be examined with the least possible delay (J.3.1.5). The party making the protest is not entitled to be present at this examination.

5.3.5. The Technical Commissioner or Scrutineer will report his findings to the Clerk of the Course, who will adjudicate on any contraventions of the Technical Regulations. After giving the parties the opportunity to be heard, the Clerk of the Course will apply the penalties prescribed by the Regulations.

5.3.5.1. If the protest is not upheld and dismantling has been involved, the competitor who lodged the protest shall pay the reasonable costs of preparing the vehicle or parts for examination, dismantling and reassembly, together with the Examiner's Fees. The amount deposited with Motorsport UK as estimated costs may be used as a contribution towards these costs.

5.3.5.2. If the protest is upheld and dismantling has been involved, the competitor who has been protested against shall pay the costs of preparing the vehicle or parts for examination, dismantling and reassembly, together with the Examiner's Fees. The findings of the Clerk of the Course will include, but are not limited to, a fee which will incorporate all these associated costs. The amount deposited with Motorsport UK as estimated costs will be returned to the competitor who has submitted the protest.

5.4. Adjudication of Protests. Any protest shall be adjudicated upon by the Clerk of the Course, subject to the rights of appeal provided by these Regulations.

5.4.1. The Protest Hearing must take place as soon as practicable and all parties given notice of the hearing. They are entitled to call witnesses, but must state their case in person and not through an advocate. In the absence of any of the parties, or in the absence of their witnesses, the Clerk of the Course may make a decision, providing he is satisfied that any party concerned is aware of the time and place of the hearing or has left the event in contravention of H.33.1.6. If a decision cannot be given at the conclusion of the hearing, all parties must be advised of the time and place at which the decision will be given.

5.5. Distribution of Awards. Where a protest is lodged, the distribution of any affected prize must be withheld until either it has been adjudicated upon or no intention of appeal has been lodged within the time allowed. The list of awards relating to such a prize must be declared provisional.

5.5.1. If, after the distribution of prizes, a decision is made which affects the results of a competition, any Competitor to whom a prize has been awarded but who is adjudged to be ineligible must return the prize to the Organisers on demand.

5.6. Forfeiture of Protest Deposit. Unless otherwise decided by the Clerk of the Course, protest deposits will be forfeited if the protest is not upheld. A protest can be withdrawn before the hearing, but the protest deposit will only be refunded at the Clerk of the Course's discretion.

5.7. The Clerk of the Course must report any Protests lodged to the Stewards of the Meeting. Any author of a Protest thought to have acted in bad faith by the Stewards will be deemed guilty of breach of these Regulations and may be penalised accordingly.

Appeals

6.1. Appeals to the Stewards of the Meeting against a decision of the Clerk of the Course or of any other Official of the Meeting.

6.1.1. Any Entrant or Competitor shall have the Right of Appeal to the Stewards of the Meeting against any penalty or decision given by the Clerk of the Course or another Official of the Meeting except for cases where these Regulations specify that no right of appeal exists (2.1.6, 2.3.1, 2.3.2, 2.3.4, 2.6.2, U21)

6.1.2. A Right of Appeal does not exist for third parties in respect of a published decision of the Clerk of the Course arising out of Disciplinary or Protest Hearings, i.e. a Right of Appeal against such decisions exists only for the parties in those proceedings.

6.1.3. It should be noted that, Technical Eligibility Appeals are not heard by the Stewards of the Meeting but are referred directly for consideration by the National Court. (See special procedure 7.2.) However, where a Competitor seeks only to challenge the penalty imposed in relation to a technical non-compliance (and the non-compliance itself is not contested) the Stewards may consider a properly lodged Appeal.

6.2. Appeals must be submitted in writing stating the grounds for the appeal, must be signed by the party making the appeal, and accompanied by the fees laid down in Part 3, Appendix 1. 13. Appeals must be lodged with the Secretary of the Meeting, the Clerk of the Course, or their deputies (G.3.2.4) within the appropriate time limit.

Where facilities exist for immediate payment by electronic transfer of funds of the above fees, then payment by such method is acceptable.

6.3. Time Limit for Appeals

Nature of Appeal	Time Limit
(a) Appeals against the acceptance of an entry, Instructions to Drivers or the length of the course	*Race and Speed Events:* not less than one hour before the start of practice. *OtherEvents:* not less than one hour before the start of the competition
(b) Appeals against handicap, make up of a heat, or qualification for a heat or final	Not less than one hour before the time laid down for the start of the competition, heat or, final
(c) Appeals against a decision of a Scrutineer or Technical Commissioner, by the Competitor directly concerned	Within 30 minutes of that decision being notified to that Competitor
(d) Deleted	
(e) Appeals against any mistake or irregularity occurring whilst the competition is taking place	Within 30 minutes of the appellant finishing the competition
(f) Appeals concerning the results of a competition	Within 30 minutes of the publication of provisional results or any amendments thereto, or, if results are published in accordance with D.26.1.3 or D.26.1.4, within seven days of the date of despatch
(g) Appeals against a decision of the Clerk of the Course not falling within (a) to (f) inclusive	Within 30 minutes from the time of the first communication of the decision to the Competitor. If the party(ies) concerned are not present when the decision is announced, within 30 minutes of the posting of the decision on the Official Notice Board. (H33.1.6)
(h) Appeals against a decision of the Stewards of the Meeting	Within 30 minutes from the time of the first communicationt of the decision to the Competitor (subject to 7.1.5(b))

6.3.1. The Stewards of the Meeting may amend the above time limits if they think that the circumstances make the lodging of an appeal physically impossible within the time quoted. If they decide to deal with an appeal 'out of time', by doing so they will be deemed to have extended the time limit.

6.3.2. Appeals against the refusal of an entry (H.30.1.3) must be made in writing to Motorsport UK within 48 hours of the competitor receiving notice that his entry is refused and in any case no later than 24 hours before the competition starts. If the National Court cannot be convened in time such appeals will be considered by the Chairman of the National Court or, in the event that he is not available, someone nominated by him and his decision shall be final.

6.3.3. Appeals against the refusal of an entry which has been submitted within 24 hours of the commencement of the event where the event is listed in D20.1.1 must be made in writing to the Stewards of the Meeting within 30 minutes of the competitor receiving notice that his entry is refused and in any case no later than one hour before the competition starts. In such cases, the decision of the Stewards of the Meeting shall be final.

6.4. Appeal Hearings. The Stewards of the Meeting shall hear any appeal as soon as practicable. All parties shall be given notice of the hearing. They shall be entitled to call witnesses, but shall state their case in person. Advocates may not be present at any hearing of the Stewards. Parties, and their witnesses, shall be given the opportunity to be heard. In the absence of any of the parties or their witnesses, the Stewards may make a decision providing that the Stewards are satisfied that any party concerned is aware of the time and place of the hearing or has left the event in contravention of H.33.1.6. If a decision cannot be given at the conclusion of the hearing all parties must be advised of the time and place at which the decision will be given.

6.5. Championship Appeals. Appeals arising out of a Championship classification, or points, will be adjudicated upon by the Championship Stewards appointed for that purpose by the Championship Organisers.

6.5.1. An appeal against points awarded (or not awarded) in a Championship must be lodged within 7 days of the first publication of the points in dispute in an official document (i.e. interim championship results, programme, etc.).

6.6. Forfeiture of Appeal Deposit. Unless otherwise decided by the Stewards for special reasons, the Appeal Deposit shall normally be forfeit if an Appeal fails for any reason.

The National Court

7.1. Appeals to the National Court.

7.1.1. A right of Appeal against a decision of the Stewards of the Meeting, or Championship Stewards, to the National Court can only be made:

(a) By a person or body who was a party in the proceedings in which the decision appealed against was made, and

(b) In accordance with the provisions 7.1.3.

7.1.2. A Right of Appeal does not exist for third parties.

7.1.3. The following are the only grounds for lodging an Appeal against the decision of the Stewards of the Meeting or the Stewards of a Championship:

(a) A gross miscarriage of justice has occurred

(b) The penalty is wholly inappropriate for the breach of regulations.

7.1.4. Notice of Intention to Appeal (7.1.5) and Confirmation of Appeal (7.1.6) must be lodged in accordance with these Regulations.

7.1.5. Notice of Intention to Appeal.

(a) A written Notice of Intention to Appeal against a decision of the Stewards of the Meeting, accompanied by the correct fee (see Part 3, Appendix 1) must be lodged with the Secretary of the Meeting, the Clerk of the Course, or their deputies (G.3.2.4) (or the Co-ordinator of the Championship in the case of an appeal against the Championship Stewards) within 30 minutes of the time of the first communication of the decision.

(b) If the party(ies) concerned does not attend the hearing, the decision must be sent to them by first class mail, and any Notice of Intention to Appeal, together with fee, must be received by the Secretary of the Meeting not later than seven days after the date of posting. A copy of such Notice of Intention must also be lodged with Motorsport UK at the same time (H33.1.6).

7.1.6. Confirmation of Appeal. Within ten days of the Notice of Intention, written Confirmation of the Appeal, signed by both the Appellant and the Entrant (if appropriate), must be submitted to the Clerk to the National Court at Motorsport UK House. This Confirmation must specify the Grounds of Appeal (7.1.3) and the arguments in support.

7.1.7. The Clerk to the National Court will refer the matter to a Chairman of the National Court who will advise within ten days as to whether the Appeal is considered to meet with either of the permitted grounds of Appeal (7.1.3). If the Appeal is considered not to comply or is withdrawn, it will lapse and the Appeal fee will be forfeited. If the Appeal is considered to meet either of the specified criteria, the Clerk will arrange for the National Court to be convened.

7.1.8. In respect of all Appeals admitted to the National Court, the Appellant must, not later than ten clear days before the notified appeal hearing date, submit to the Clerk to the National Court, a skeleton argument in writing. This skeleton argument must:

- Identify all regulations involved
- Identity all Appellant's witnesses
- Specify the factual basis of the Appeal, including the evidence to be given in support of the Appellant.

7.1.9. Where an Appeal, or Protest, is in respect of an incident involving any other party in addition to the Appellant or a Protestor, the Clerk to the National Court will forward a copy of the Appeal and this Skeleton Argument to such other party who within 10 days must file his response.

7.1.10. In the case of Appeals listed at short notice, the Clerk to the National Court may, with the agreement of all parties, alter the timetable for the delivery of skeleton arguments.

7.2. Eligibility Appeals.

7.2.1. A special appeal procedure (6.1.3) applies in the case of any appeal against a ruling in respect of eligibility of a vehicle or against the imposition of 3.5.1(c). These Appeals are not heard by the Stewards of the Meeting but are referred directly for consideration by the National Court.

(a) A written Notice of Intention to Appeal accompanied by the correct fee (see Part 3, Appendix 1) must be lodged, with the Secretary of the Meeting, the Clerk of the Course, or their deputies (G.3.2.4) within 30 minutes of the decision being notified, unless that decision is notified only in writing, in which case any Notice of Intention to Appeal, together with fee, must be received by the Secretary of the Meeting not later than seven days after the date of posting. A copy of such Notice of Intention must also be lodged with Motorsport UK at the same time.

(b) The Secretary of the Meeting/Clerk of the Course must inform the Technical Commissioner/Chief Scrutineer that Notice of Intention to Appeal their decision has been lodged as soon as such a Notice is received.

(c) Within ten days of the Notice of Intention to Appeal, both the appellant parties and the Technical Commissioners/Scrutineers concerned must submit to the Clerk to the National Court, in writing, the detailed reasons for appealing, or of coming to the decision complained of, quoting regulation numbers, technical specifications etc as relevant.

(d) Copies of these submissions will be sent to the opposing parties, and also to any other party directly involved by the Appeal, with a further ten days allowed for written comment.

(e) Copies of these written comments will be sent to opposing parties and, where any entirely new matter has been raised, a further seven days will be allowed for written response on that specific point.

(f) All these written submissions and any associated exhibits will then be considered by the National Court, who will adjudicate on the matter.

(g) There will be no right to an oral hearing.

7.3. Effect of Giving Notice of Appeal.

7.3.1. The lodging of an Appeal against a decision of the Clerk of the Course, or the giving of Notice of Intention to Appeal against a decision of the Stewards of the Meeting, does not suspend any penalty that may have been applied or endorsed, during the Meeting out of which the decision has arisen.

7.3.2. After the conclusion of the Meeting out of which a decision has arisen, if Notice of Intention to Appeal against a Stewards' decision has been given, the operation of any sentence or decision will be suspended until the disposal of the Appeal by the National Court. If a sentence of suspension is upheld, the Competitor concerned will be disqualified from the results of any competition in which he has competed pending the hearing of the Appeal. In coming to a judgement, the National Court can take into account any benefit the Appellant may have gained through appealing.

7.4. Time Limits

The National Court has authority to extend the time limits for admission of appeals in such circumstances as are considered, at its sole discretion, to be appropriate in the interests of justice.

7.5. Judgement on Appeal to the National Court

The National Court can decide that a penalty or other decision appealed against can be waived, varied or a fresh penalty imposed and/or may make such other or further order as it deems appropriate.

However it can not order any competition to be re-run. Court decisions are normally given at the end of a hearing, but exceptionally can be reserved, and a written decision (including reasons) sent to all parties as soon as practicable.

8. Disciplinary Hearings

8.1. The National Court is empowered to decide cases brought before it by Motorsport UK for breaches of these regulations and to impose any appropriate penalty and any order for costs.

9. Investigatory Hearings

9.1. If it appears to Motorsport UK from a Steward's Report or otherwise that there may have been a breach of these Regulations, an incorrect or improper declaration of results of a competition, breach of condition of permit, defect, default, omission, irregularity or inconsistency ("the Issue") Motorsport UK at its discretion and no later than 60 days from the Issue coming to the attention of Motorsport UK, shall be entitled to refer the Issue to the National Court provided always that the Issue has not previously been considered by the National Court, except as permitted under 9.1.1. Upon such referral the National Court, after giving interested parties an opportunity to be heard, may make such order as it deems appropriate. If the National Court concludes that a breach of these regulations may have occurred it may deal with the Issue either forthwith or defer it to a later date and in either case may impose such a penalty, and any order for costs as it considers appropriate.

9.1.1. In circumstances where Motorsport UK is satisfied that a new element in respect of the Issue is discovered, Motorsport UK may within 60 days refer the Issue back to the National Court for further consideration and, if appropriate, the possible revision of their previous decision, notwithstanding that the Issue has already been considered by the National Court.

9.1.2. Motorsport UK may also refer an issue to the National Court notwithstanding the 60 days time limit provided by 9.1 and/or 9.1.1 having expired provided that all parties concerned are agreed that an Investigatory Hearing is appropriate.

9.1.3. Exceptionally the National Court may consider an application by a party other than Motorsport UK for the National Court to hold an Investigatory Hearing into an issue which Motorsport UK has not itself referred to the National Court. If the National Court is fully satisfied that it would have been reasonable for such a referral to have been made then the National Court may, of its own volition, instigate an Investigatory Hearing.

Any such application may only be submitted by one or more of the parties directly involved in the issue and must be made promptly and in any event within three months from the date when the issue was first brought to the attention of Motorsport UK or if later within 14 days of written notification to the parties that the issue would not be referred by Motorsport UK to the National Court.

Applications must be submitted in writing to the Clerk to the National Court and be accompanied by the appropriate fee. In applications considered to be of sufficient urgency the National Court is entitled to proceed against an undertaking to lodge the fee.

The application must be set out in full the grounds for requesting the National Court itself to instigate an Investigatory Hearing and should be supported by any relevant documentary or other evidence. If so directed by the National Court the parties to the Application shall furnish to the National Court for transmission to the other parties all documentation then and at any time in the possession of the parties relating to the specific event out of which the issue is stated to have arisen and if necessary the National Court may amend any relevant time-limit or timetable until this requirement has been complied with.

Correctly lodged applications will be considered by the National Court acting by a panel of three of the nominated Chairmen of the National Court. Any application considered by the National Court shall be deemed correctly lodged.

Motorsport UK will be asked by the National Court to set out the process that has been followed in dealing with the issue in question and the reasons for the non-referral to the National Court by Motorsport UK. This will be disclosed to the Applicant except in exceptional circumstances as determined exclusively by the National Court.

The National Court will consider the application by way of written submissions but the National Court has the authority to call an oral hearing should it consider it appropriate to do so and the parties (including Motorsport UK) may be represented at such a hearing. Written submissions shall be exchanged and disclosed. The National Court may facilitate additional submissions as it sees fit.

Applications will only proceed to an Investigatory Hearing of the National Court (and the Application Fee returned) where the National Court is fully satisfied that any reasonable tribunal properly advised would have considered it appropriate to refer the issue to the National Court and that the holding of an investigatory hearing would clearly be in the best interests of the sport.

If an application is considered by the National Court to satisfy the above criteria then an investigatory hearing into the issue will be arranged under the chairmanship of a National Court Chairman who shall be legally qualified. For the avoidance of doubt it should be noted that an application under this Regulation 9.1.3 shall not in any way determine the substance of the issue itself which shall be reserved to any investigatory hearing.

Any decision to hold an investigatory hearing under this Regulation should not be taken by any party as any indication as to the possible findings and outcome of that hearing.

If an application is considered by the National Court to be frivolous or vexatious, the National Court may make an order for costs in favour of Motorsport UK on an indemnity basis.

9.1.4. The National Court has discretion as to the procedure it adopts for the purposes of any investigatory hearing under this Regulation 9.

10. Arbitration

10.1. The National Court shall be empowered at its sole discretion to provide binding arbitration between competitors, clubs and other recognised bodies, and one another on any matter directly connected with Motor Sport. This arbitration can be requested by those concerned, or initiated by Motorsport UK but may only proceed with the consent of all parties. Liability for the costs of the arbitration may be ordered by the Court who are also empowered to make such order in respect of the terms of the arbitration as they think fit. Any party requesting arbitration must pay a non-refundable fee as detailed in Part 3, Appendix 1.

11. Anti-Doping and Anti-Alcohol and Illicit Drugs

11.1. The Anti-Doping Regulations, Anti-Alcohol Regulations and Illicit Drugs Testing Regulations are detailed in H38.

12. Hearings of the National Court

12.1. All parties concerned in any hearings held by the National Court must be given adequate notice of the hearing, and (except for matters before an Eligibility Appeal Hearing 7.2) are entitled to call witnesses, give evidence and be represented by an advocate if they choose. The name of any advocate must be advised to the Clerk to the National Court prior to the hearing date. The hearing can proceed to a decision whether or not any or all parties are present.

13. Costs

13.1. In giving a decision, the National Court can award costs to cover its own expenses, together with those incurred by Motorsport UK. These will exclude the expenses or defence fees incurred by the individual parties. Any costs incurred in bringing or responding to an action before the National Court must be borne by the party incurring the cost. Exceptionally, in the case of an Investigatory hearing (9), the Court may order the payment of costs against an individual party

Right of Review

14.1.1. A party has the right to request the review of a decision if, in Competitions forming part of a Motorsport UK Permitted Championship, cup, trophy, challenge or series, a significant and relevant new element is discovered which was unavailable to the parties seeking the review at the time of the decision concerned. The Clerk of the Course or the Stewards who have given a ruling or, failing this, a person or body designated by Motorsport UK for the purpose ('the Review Body') may decide to re-examine their decision following a written request for review by:

(i) Any one of the parties concerned being a party that is directly affected by the decision handed down, or

(ii) the Regulatory Counsel of and on behalf of Motorsport UK.

The Clerk of the Course or the Stewards also have the right, of their own volition, to instigate such a review if they themselves discover a significant and relevant new element which was unavailable to them at the time of the decision concerned.

The Review Body must meet (in person or by other means) on a date determined in its discretion, summoning the party or parties concerned to hear any relevant explanations and in the Review Body's judicial discretion to consider any evidence not previously available and so to judge on the matter in the light of the facts and elements brought before them.

14.1.2. The party or parties concerned may waive their right to a hearing in writing but shall be permitted to make written representations but a party is not entitled to be represented at any hearing other than those conducted by the National Court or the International Court of Appeal.

14.2. Pending determination by the Review Body a review has no suspensive effect on the execution of the original decision of the Clerk of the Course or the Stewards when they have given a ruling.

14.3. The Review Body shall have the sole discretion to determine if a significant and relevant new element exists and, if so, to determine if the original decision including any penalty shall stand or be set aside or varied.

14.3.1. The decision of the Review Body as to whether or not such an element exists is not subject to appeal before any further judicial body.

14.3.2. If the Review Body determines that a significant and relevant new element does exist and therefore progresses to a re-examination of their original decision, the subsequent decision of the Review Body as to whether the original decision shall stand or be set aside or varied may be appealed.

14.4. The period during which a request for review may be brought expires fourteen calendar days after the end of the Competition concerned.

14.4.1. Furthermore, within the framework of a Motorsport UK Permitted Championship, cup, trophy, challenge or series, a request for review may not, in any event, be brought less than four calendar days prior to the date of the relevant prize-giving ceremony following the end of the Competition concerned.

14.5. The right of appeal against a new decision, subject to 14.3.1 and in accordance with 14.3.2 above, is confined to the circumstances permitted by GR C.6.1.1 and C.7.1.1 (as appropriate) and pursuant to GR C.6.1.2 and C.7.1.2 limited to the party or parties concerned.

14.6. Should the first decision already have been the subject of an appeal before the Stewards, the National Court or before the International Court of Appeal, or successively before more than one of these judicial bodies, the case shall be submitted only to them for the possible revision of their previous decision.

Recording of Judicial Hearings

15. Only audio or video recordings by the Officials of the Event or National Court (official recordings) of Judicial Hearings are permitted. Such recording shall be on a suitable secure digital recording device under the control of the Organisers. A Competitor is not permitted howsoever to record any Judicial Hearing and breach of this obligation shall be treated as a breach of C.1.1.3.

15.1. The official recording shall not be edited and shall be securely retained by the Organisers for a maximum period of 70 days (C.9.1) following the last day of the Event at which the Hearing took place or if it takes place otherwise than at an Event then 70 days next following the date of the Hearing.

15.2. The fact of the official recording must be notified to all participants at the commencement of the hearing and shall be noted on the relevant Judicial Decision and referenced in any written notes.

15.3. The official recording shall be surrendered to Motorsport UK or to the National Court on demand. If it is not demanded within the above time-limits (C.15.1) then it shall be disposed of securely.

15.4. No part of any official recording nor any transcript of it shall be published broadcast or distributed howsoever, including through any social media.

15.5. Any official recording may be considered as evidence by the National Court and by the Stewards of the Meeting where any dispute between the parties to the Appeal arises as to the evidence given before another Judicial body at the Event or any Hearing other than at the Event.

15.6. An Appellant proceeding before the National Court shall be entitled to be provided with a copy of the official recording only for the purposes of preparing for that Appeal or appearing before the Court and otherwise subject to the provisions of this Regulation C.15.

Judicial Notes for Guidance

Notes for Guidance are now published in Part 3, Appendix 4.

(D) Organisers

General

1. Competitions may only be organised in the territory of Motorsport UK by:

(a) Motorsport UK or

(b) A Club or Clubs registered by Motorsport UK in accordance with A.4.0.

(c) Any other organisation approved by Motorsport UK for the promotion of motor sport.

(d) Authorised Entrants organising a Speed Record Attempt.

Registration of Clubs (A.4.0)

2. No Club may organise an event unless it has first applied for registration with Motorsport UK on the appropriate form, is a member of a Motorsport UK recognised Regional Association (4.3) where appropriate and has paid the appropriate annual registration fee (see Part 3, Appendix 1).

Fixture List

3.1. All events at Interclub or higher status must be inscribed on the Motorsport UK Fixture List.

3.1.1. Events at a lesser status than Interclub must be listed on a Regional Association fixture list.

3.1.2. To have an event entered on the Fixture List, a club must:

(a) Apply before a date to be specified annually, or

(b) If after this specified date, apply a minimum of two clear calendar months before the month in which the event is proposed.

(c) If an already notified date is to be changed for any reason apply as (b) above.

3.2. Applications made under 3.1.2 (b) or (c) may be subject to a fee detailed in Part 3, Appendix 1 (except in the case of recently Registered Clubs) and will be advised by means of an official announcement and, with the exception of rallies requiring a CAO authorisation, may be subject to objection from Regional Associations or clubs whose dates for a similar type of event have already been listed. Such objection must be made within one month of the date of publication.

3.2.1. The organisers of any event inscribed on the Motorsport UK or Regional Fixture List which is cancelled may be liable for a fee as detailed in Part 3, Appendix 1.

3.2.2. All International events must be inscribed on the International Calendar as prescribed by the FIA. All National Competition with Authorised Foreign Participation (NCAFP) must be inscribed on the relevant ASN's National Calendar as prescribed by the FIA. Separate fees are payable to the FIA in respect of inscription. Information as to the procedure can be obtained from Motorsport UK (4.3.1(d)).

3.2.3. All competitions (including Training Events) must be run in accordance with these Regulations unless specific exemption is given before a permit is granted.

Necessary Permission

4.1. No Event or Championship shall be held unless Motorsport UK has issued a Permit or the event is of a kind for which Motorsport UK has granted exemption from these Regulations (5).

4.1.1. It is the sole responsibility of applicants to ensure that an application for a Championship, Series or Permit complies fully with the General Regulations. Whilst Motorsport UK, at its absolute discretion, may review any application (in particular those relating to its own Motorsport UK British Championships so as, for example, to ensure compliance with the tender process) it should be noted that Motorsport UK does not approve Championship, Series or Event Regulations and specifically that the issuing of a Permit by Motorsport UK shall not be taken as giving any such approval.

4.1.2. Applications for permit must be made on a form prescribed by Motorsport UK not less than the following time before the event:

(a) International or National – 8 weeks.

(b) Interclub – 6 weeks.

(c) Clubmans – 4 weeks.

(d) Championships – in accordance with details in appropriate Specific Regulations (7) (Section W).

4.1.3. Failure to comply with time limits (a), (b) or (c) will render the Club liable to a fee specified in Part 3, Appendix 1.6 on the first occasion and increased fees for any subsequent breach.

4.1.4. Any application for Permit not made as prescribed may be refused or returned for resubmission, as may any application from a club which has failed to discharge any requirements or indebtedness to Motorsport UK in respect of previous events.

4.1.5. Motorsport UK reserves full rights to add or modify any conditions attached to the Permit even after it has been granted, and may decline to grant or may withdraw a Permit without stating a reason.

4.1.6. Events of Interclub or higher Permit grade may not be authorised when a club has not organised an event of the same grade and type within the preceding two years, unless upgraded in accordance with the specific regulations.

4.1.7. The scope of a Permit includes approval of the title of an event (the titles Grand Prix, British, United Kingdom, UK etc. are reserved for events or championships organised by, or for, Motorsport UK) and permission to televise or broadcast the event.

Note: Throughout these sections an asterisk(*) indicates a requirement for additional information to be printed in the Supplementary Regulations (SRs). Text shown in Italics indicate a Regulation which may be amended in the SRs. Text shown in red indicates a new or amended regulation for 2022.

How to write and send a press release

One of the best ways to reach your target audiences is through the websites, magazines, newspapers, TV and radio shows that they might read, watch or listen to. For motorsport events, these will usually be motorsport and local media outlets.

The motorsport press will be read by a captive audience of motorsport enthusiasts, while local and mainstream titles will allow you to reach new audiences, which is so important if you want to grow your reach.

A common mistake is to bombard media contacts with incessant press releases repeating the same old lines. Instead, make sure your press releases are planned as part of your wider marketing strategy, and only send a press release when you have news to announce.

What is news?

A commonly used definition is that 'dog bites man' is not news, whereas 'man bites dog' is. In other words, news is something that is out of the ordinary – this is your news hook. In the case of a motorsport event, this could be: confirming a star driver; achieving a record entry; signing a new sponsor; attracting a record number of volunteers; or raising a significant amount of money for charity.

How do we write a news story?

Think of a story like an upside-down pyramid; as well as the news hook, you want to get as much important information in at the top as you can. Consider the five Ws: who; what; when; where; why. In the following [fictional!] example, we cover off four of the five Ws is a single sentence:

The Colnbrook Motor Club [who] has attracted a full entry [news hook] for its inaugural closed-road race [what] in Slough [where] this weekend [when].

The media will also want a quote from someone involved in your event. They might also need a rights-free image (in high resolution!) and contact details for further information – or to request an interview – so make sure all this is included in your release.

How do we send a press release?

It's important to make your press release look professional, and it goes without saying that you should proof read it carefully to eliminate spelling, grammar and punctuation mistakes.

When you're ready to send, you could attach it to an email as a PDF, in which case make sure the recipient list is in the Bcc address bar, not To or Cc! However, why not try an email marketing platform? There are plenty out there, so have a look around to find out which one works for you, but Mailchimp, for example, is user-friendly and free to use, providing that you have a contacts list of no more than 2,000 email addresses.

Can anyone give us a bit of help getting started?

Of course! If in doubt, contact the Motorsport UK Marketing and Communications Team for advice on media@motorsportuk.org

How to advertise on Facebook | **See page 87**

4.1.8. No event shall be publicised by the issue of regulations or in any other way without the prior approval of Motorsport UK in writing. The issue of a Permit constitutes such approval.

Permit Fees

4.2. The scale of fees payable to Motorsport UK on the grant of an organising Permit are laid down in Part 3, Appendix 1.

Grade of Events

4.3. Clubs will start by organising events of Clubman grade and will only be allowed a higher grade after successful upgrading.

4.3.1. The following Permit definitions apply.

(a) Clubmans – Events confined to members of the organising club and not more than fifteen invited clubs. Clubman events may not form part of any Championship other than a Championship restricted to the organising club. Additional regulations applying to certain Clubmans events are detailed in 4.5 below.

(b) Interclub – Events confined to registered members of the organising club, of other invited clubs, Associations or Groups or (in certain special circumstances) persons having some other particular qualification which shall be agreed in advance by Motorsport UK.

Organising clubs may invite:

45 Clubs provided that the names of those clubs are published in the SRs

or any number of Registered Championships and 4 Regional Associations and/or Recognised Groups.

(c) National. Events open to any holder of a valid competition licence issued by Motorsport UK and any holder of a valid competition licence acceptable to Motorsport UK.

(d) International (A.2.3). Events open to any holder of a valid International competition licence issued by Motorsport UK, or any foreign competitor holding a valid FIA International competition licence.

4.3.2. An Interclub or National event (non-race), may be a part of any number of championships. All competitors in those championships, where appropriate, must be registered and produce their registration card at signing-on. In all cases the championship(s) must have been registered with or exempted by Motorsport UK (3.2.3) and the registration number shown in the SRs.

4.3.3. In an Interclub or Clubmans event, only registered members of such clubs which have specifically been invited and are listed in the regulations for the event shall be eligible to compete.

4.3.4. If a club wishes to extend an invitation to all other clubs in a Regional Association or Recognised Group it must first obtain that Association or Group's authorisation.

4.3.5. Any events detailed above in 4.3.1(a), (b),or (c) may invite foreign participation subject to the event being entered on the National Calendar.

Upgrading Requirements

4.4. A club requiring an event to be upgraded for the following year must apply to Motorsport UK at least eight weeks before the event so that an observer may be appointed.

4.4.1. A fee will be charged for his attendance.

4.4.2. No separate observer will be appointed if a Motorsport UK Steward will be attending.

4.4.3. In addition to satisfactory reports from the appointed Motorsport UK Stewards or Observers, certain minimum requirements must have been attained before applications for upgrading, or to British Championship status, will be considered.

4.4.4. These are detailed under the appropriate Specific Regulations.

4.4.5. Additional requirements or changes of date, may be specified by Motorsport UK before acceptance.

Clubmans Permits

4.5. Clubmans Permits for the following types of event must comply with 4.5.1. to 4.5.6.

(a) 12 Car Rallies.

(b) Navigational Scatters.

(c) Sporting Trials.

(d) Car Trials.

(e) AutoSolo.

(f) Autotests.

(g) Production Car Autotests.

(h) Cross Country Trials (Untimed).

(i) Cross Country Tyro Trials.

(j) A Veteran Car Rally (or Run) (R.17.3).

(k) Classic Reliability Trials.

(l) Navigation Rallies limited to 20 cars not being part of a championship other than that of a Regional Association.

4.5.1. Application must be made to Motorsport UK not less than four weeks prior to the event.

4.5.2. Applications to Motorsport UK do not need to be accompanied by a copy of the Supplementary Regulations for the event. SRs must be prepared however in accordance with the relevant parts of 10 and made available to all competitors before the start of the event and if requested, Motorsport UK.

4.5.3. Deleted.

4.5.4. Events in 4.5. (b) to (l) may form part of a Regional Association Championship or a Closed to Club Championship as defined in 7.1.3.

4.5.5. Unless there has been any incident involving loss or damage to persons or property, in which case full details must be submitted to Motorsport UK, the only documentation required after the event is the completed permit form along with correct fee.

4.5.6. Clubs may organise no more than one event of each type prescribed in 4.5 per calendar year as a "Taster Event" where, provided Motorsport UK has granted specific approval, members of unrecognised clubs or members of the public may participate but not officiate and will be deemed to be a member of the club for the day on completion of an application form for an RS Clubmans Competition Licence.

Events Exempt from these Regulations (Certificate of Exemption)

5.1. Clubs organising events of the type specified below may be granted a Certificate of Exemption providing application is made to Motorsport UK not less than four weeks prior to any announcement of the event.

5.1.1. A Certificate of Exemption from these Regulations indicates that there is no right of appeal to the MSC and that provided Motorsport UK has granted specific approval members of unrecognised clubs or members of the public may participate, but not officiate, at such events.

5.1.2. Any of the following events which are run commercially for profit will be levied a facility fee in accordance with Part 3, Appendix 1 at the discretion of Motorsport UK.

(a) A Touring Assembly as defined in The Terminology and in which there is no individual timing except for the purpose of preventing competitors travelling too fast or too slow.

(b) A Gymkhana held entirely on private ground.

(c) A Treasure Hunt run in accordance with R.17.2.

(d) A procession for charitable or historic purposes.

(e) A Concours d'Elegance.

(f) A Road Safety event run in accordance with R.17.1.

(g) An approved Driver's Training day or Special Demonstration for non-speed events. A charge may be made by Motorsport UK for such events.

(h) A Cross Country Promotional Event in accordance with P.9.

(i) An Economy Rally held in accordance with R.16.2.

5.1.3. An event complying with 5.1.2 (b), (c) or (h) organised for Cross Country Vehicles may not be considered suitable for the normal insurance arrangements for this type of event and will be charged a normal per capita insurance and permit fee. Such events must be clearly identified on application.

5.1.4. Following the event, copies of all published documents issued for the event must be sent to Motorsport UK.

5.1.5. The following special events may qualify for a Certificate of Exemption, and will be charged a facility fee in accordance with Part 3, Appendix 1, 8.2 at the discretion of Motorsport UK:

(a) Rallysprints.

(b) Any other event not provided for in the General Regulations which Motorsport UK deem to be appropriate.

Permission of National and Local Authorities

6.1. No Permit, or Certificate of Exemption, will be granted by Motorsport UK, unless the organisers have first obtained such official permission as may be necessary from the competent governmental or local authority.

6.1.1. Competitions taking place on the public highway must conform with the laws of the country in which they take place. Any breach of such laws by a competitor or driver during a competition shall be a breach of these rules and may be dealt with accordingly.

6.1.2. Any event utilising the Public Highway in England, Wales or Scotland is subject to the provisions of the Motor Vehicles (Competitions and Trials) Regulations.

6.1.3. The Road Traffic Act 1991 includes regulations which make dangerous or careless driving in a public place an offence. Section 13A of that act provides for the Motor Vehicles (Off Road Events) Regulations 1995 and the issue of a Motorsport UK Permit exempts competitors from the appropriate sections of the Act (Sections 1, 2 & 3) whilst driving within the rules of the competition.

Championships

7.1. Championship or Series applications must be submitted to Motorsport UK in accordance with Section W.

7.1.1. A permit and/or facility fee may be charged for such approval.

7.1.2. Motorsport UK reserves the right to charge a Promoter's Permit fee (Part 3, Appendix 1).

7.1.3. Exceptionally Championships for Autotests, any form of un-timed Trial, Navigational Rallies, 12 Car Rallies, Scatters and Internal Club Challenges (unspecified events on unspecified dates) which are confined to bona fide members of the organising club are exempt from registering with Motorsport UK.

7.1.4. Detailed definitions of the categories of Championship, and Regulations for their approval, are printed on the notes accompanying the Championship Permit Application Form.

7.1.5. The right to a championship title resides with the body who originally registered that championship. However, where a championship was originally proposed by a commercial body, that body shall have the right to nominate or change the organisers of that championship, subject to the terms of their contract.

7.1.6. The registration of a championship for a specific class of vehicle does not give the Championship Organiser the right to prevent other championships for that class of vehicle (subject to the authority of Motorsport UK).

7.1.7. Championship Organisers may specify in their Championship Regulations procedures for the gathering of on-board data logging information.

7.1.8. The organisation and control of a championship shall at all times rest with the championship permit holder, subject to these Regulations.

7.1.9. Championships bearing the title International, European, British, National or other titles which mean to convey the same impression are normally reserved for series promoted by, or on behalf of, Motorsport UK. Organisations wishing to make application for such a series or to be associated with such a series, should seek separate approval from Motorsport UK prior to application for a Permit.

7.1.10. Championships bearing the title British and including one or more qualifying rounds of International status events, where those rounds are also rounds of an FIA Championship, must submit their Championship calendars by 31st May in the preceding calendar year for approval by the Motor Sports

Council. Championships bearing the title British and comprising International events not being rounds of an FIA Championship and/or national events must submit their Championship calendars by 31st August in the preceding calendar year for approval by the Motor Sports Council.

7.1.11. Motorsport UK alone shall be entitled to authorise the broadcasting, transmission, audio/visual recording and moving picture rights of any Motorsport UK Championship event. Prior to any such event the organising club will arrange for the consent of the landowner to be given so that Motorsport UK can authorise such broadcasting, transmission or audio/visual recordings to take place. For all events held on the public forest estates managed by Natural Resources Wales, Forestry and Land Scotland, and Forestry England, special arrangements exist with Motorsport UK. Further details of these arrangements are available from Motorsport UK.

7.1.12. To accrue points or any other form of recognition towards an award or title any organisation, team, company, sponsor or person must be in possession of a valid Entrant's Licence.

Official Documents

8.1. All events are governed by the following Regulations.

8.1.1. The General Regulations of Motorsport UK which may hereafter be referred to as these Regulations or GRs (A.2.2).

8.1.2. The Supplementary Regulations, which may hereafter be referred to as SRs, published prior to the acceptance of entries by the club organising the event, which may hereafter be referred to as the Organisers. Any SR not in conformity with the GRs shall be null and void.

8.1.3. Any relevant Technical Regulations.

8.1.4. Any Official Instructions which may be issued in writing by the Organisers to competitors, to deal with particular points arising after the issue of the SRs, but if and so far as such instructions are contrary to the SRs (except as in 11) or these Regulations they shall be null and void.

8.1.5. These documents will be jointly referred to as The Regulations of the Event. (The Regulations.)

Announcement to be made on all Official Documents

9.1. All Supplementary Regulations, Programmes and Entry Forms relating to any event shall bear in a conspicuous manner the following announcement: 'Held under the General Regulations of Motorsport UK (incorporating the provisions of the International Sporting Code of the FIA) and these Supplementary Regulations.'

Contents of Event Supplementary Regulations

10.1. The Event SRs must contain the following information as relevant:

10.1.1. The names of the Organising Club and the Promoters.

10.1.2. The name, date, place, and nature of the proposed event(s).

10.1.3. A statement in accordance with 9.1.

10.1.4. The Permit Number and grade of Permit(s) issued by Motorsport UK. In the case of dual Permit meetings, details of what grade of licence is required for each event/race.

10.1.5. Details of Eligible Competitors.

10.1.6. Details of any Championships incorporated in the Meeting.

10.1.7. The dates, times and places fixed for the official Scrutineering of vehicles.

10.1.8. The dates, times and nature of starts, with details of any handicapping.

10.1.9. A brief description of the proposed event(s) including length of the course, and the categories of vehicle eligible.

10.1.10. The relative positions of the vehicles at the start and how they are to be determined.

10.1.11. Requirements for practice.

10.1.12. Particulars of the identification numbers and marks to be carried (J.4, R.6, S.9.2.3) (U.17.25 to 17.28).

10.1.13. Provisions in regard to vehicles in the pits area.

10.1.14. The facts to be judged by the Judges of Fact (G.10.2) and Driving Standards Observers (G.11.1 to 11.2).

10.1.15. If television coverage is expected, competitors must be advised that restrictions on advertising will be imposed (H.28).

10.1.16. A detailed list of prizes allocated to each event.

10.1.17. The maximum and minimum number of competitors and how entries are to be selected for acceptance if in excess of the maximum (14.1). Any provision to amalgamate classes.

10.1.18. The dates of opening and closing of entries and where they shall be sent (12.1).

10.1.19. The amount of the entry fee (12.1), and provisions for the refund of entry fees (H.31.1.2).

10.1.20. Conditions in which entries may be refused (14.1).

10.1.21. Any additional information required on entry forms (12.3).

10.1.22. Whether the nomination of drivers may be delayed (12.3). Whether there is any provision to change nominated drivers.

10.1.23. Provisions regarding postponement, abandonment or cancellation (29).

10.1.24. The names of the Stewards of the Meeting, the Clerk of the Course, Secretary of the Meeting, Chief Scrutineer and Chief Timekeeper.

10.1.25. When and where Provisional Results will be published.

10.1.26. The manner in which results will be determined and prizes awarded.

10.1.27. A reminder of the Regulations concerning Protests (Section C).

10.1.28. In addition to any Parc Fermé required by these regulations organisers may, at their discretion, specify as many Parc Fermé as may be deemed by them to be necessary for the proper conduct of the event (R.31.2.11).

10.1.29. All such other requirements and information as shall from time to time be specified in the Motor Sports Yearbook, the Permit Application Form, or as may be necessary for the proper conduct of the meeting.

Alteration of Supplementary Regulations

11.1. No alteration or addition may be made to the Supplementary Regulations after the commencement of the period for receiving entries unless:

11.1.1. Motorsport UK and all competitors already entered agree in writing to the alteration, or

11.1.2. The Stewards of the Meeting so decide for reasons of safety or force majeure. or

11.1.3. Subject to the agreement of Motorsport UK, amendments restricted to the safe and orderly conduct of the Meeting may be made by the Organiser until the beginning of the Event concerned (as defined in Duration of Meetings and Events (see Section B)).

11.2. Where a Championship Permit has been issued, Championship Sporting and Technical Regulations may not be amended after publication unless Motorsport UK and all competitors registered for the Championship agree in writing to the alteration. Such amendments must be circulated to all Registered Competitors, Championship Stewards, Eligibility Scrutineer, Clubs organising Rounds of the Championship and to Motorsport UK.

11.3. Championships exempt from registering with Motorsport UK do not need to comply with 11.1.3. above (7.1).

Opening of Entries

12.1. An Organising Permit having been granted, the Organisers may invite, receive and accept entries from eligible competitors.

12.1.1. Every entry form sent out by the Organisers shall be accompanied by a copy of the relevant SRs.

12.1.2. Every entrant and driver shall complete and sign an entry form and submit it to the Organisers by the appropriate date together with the entry fee (if any).

12.1.3. An entry form which is incomplete in any material particular may be accepted by the Organisers conditionally upon a completed entry form being received by a specified date.

12.1.4. An entry not accompanied by the entry fee prescribed in the regulations shall be null and void.

Entry by fax or other electronic means

12.2. An entry may be made by facsimile or by any other electronic means of communication provided it is received before the time laid down for the closing of entries, together with the entry fee (if any).

Contents of Entry Form

12.3. Entry forms shall contain the following:

12.3.1. Title and date of the event and identity of promoters/organisers.

12.3.2. A statement in accordance with 9.1.

12.3.3. Spaces for the full true names and addresses of entrant, driver(s) and passenger(s) and (if appropriate to the event) the licence number of the entrant, driver(s) and passenger(s). SRs may permit the nomination of drivers and passengers to be deferred, but no driver or passenger shall compete unless he has first signed the appropriate indemnity declaration(s) and/or undertaking(s) as required by 13.1.

12.3.4. The forms of indemnity, declaration and undertaking as appropriate in accordance with 13.1 and spaces for the appropriate signatures. N.B. If all competitors in the event hold Motorsport UK licences, 13.2.2 applies.

12.3.5. Any other information required by the SRs to be stated on the form (e.g. details of a car or details of the competitor's club).

12.3.6. For all events using the Public Highway, the entrant will also be required to supply the name and address of the vehicle's insurers and Insurance Agent (R.5.1.2).

12.3.7. Space for the name and address of a relative or friend to be informed in the case of a serious accident.

12.3.8. A statement that any indemnity and/or declaration as prescribed below which is signed by a person who has not reached his 18th birthday shall be countersigned by that person's parent or guardian, whose full names and address shall be given. An entry may be made by facsimile or by any other electronic means of communication and must be made by the parent or guardian, whose full names and address must be given (H.32).

Understandings, Declarations and Undertakings by Entrants, Drivers and Passengers (A.2.6.1) (H.24)

13.1. Every entrant, driver and passenger before taking part in any competition must sign an undertaking as follows:

> 'I declare that I have been given the opportunity to read the General Regulations of the Motorsport UK and, if any, the Supplementary Regulations for this event and agree to be bound by them. I declare that I am physically and mentally fit to take part in the event and I am competent to do so. I acknowledge that I understand the nature and type of the competition and the potential risk inherent with motor sport and agree to accept that risk.
>
> 'I understand that motorsport can be dangerous and accidents causing death, injury, disability and property damage can and do happen. I understand that these risks may give rise to my suffering personal injury or other loss and I acknowledge and accept these risks. In consideration of the acceptance of this entry I agree that neither any one of or any combination of Motorsport UK and its associated clubs, the organisers, the track owners or other occupiers, the promoters and their respective officers, servants, representatives and agents (the "Parties") shall have any liability for loss or damage which may be sustained or incurred by me as a result of participation in the Event including but not limited to damage to property, economic loss, consequential loss or financial loss howsoever caused. Nothing in this clause is intended to or shall be deemed to exclude or limit liability for death or personal injury. To the fullest extent permitted by law I agree to indemnify and hold harmless each of the Parties in respect of any loss or damage whatsoever and howsoever arising from my participation in this event.
>
> 'I declare that to the best of my belief the driver(s) possess(es) the standard of competence necessary for an event of the type to which this entry relates and that the vehicle entered is suitable and roadworthy for the event having regard to the course and the speeds which will be reached'.

State your age if you are under 18 …

13.1.1. Every entrant shall sign the following declarations (as appropriate):

(a) In the case of Races or Speed Events: 'I declare that to the best of my belief the driver(s) possess(es) the standard of competence necessary for an event of the type to which this entry relates and that the vehicle entered is suitable and roadworthy for the event having regard to the course and the speeds which will be reached.'

(b) In the case of any event taking place wholly or partly on publicly adopted roads: 'I declare that the use of the vehicle hereby entered will be covered by insurance as required by the law which is valid for such part of this event as shall take place on roads as defined by the law. I declare that the vehicle entered is registered, taxed, has a valid MOT certificate (where appropriate) and is roadworthy as required by law.'

(c) If I am the Parent or Guardian of the driver 'I understand that I shall have the right to be present during any procedure being carried out under the Supplementary Regulations issued for this event and the General Regulations of Motorsport UK.' As the Parent/Guardian 'I confirm that I have acquainted myself and the minor with Motorsport UK General Regulations, agree to pay any appropriate charges and fees pursuant to those Regulations (to include any appendices thereto) and hereby agree to be bound by those Regulations and submit myself without reserve to the consequences resulting from those Regulations (and any subsequent alteration thereof). Further, I agree to pay as liquidated damages any fines imposed upon me up to the maxima set out in Part 3, Appendix 1.'

Where the Parent is not present there must be a Guardian who must produce a written and signed authorisation from the Parent/Guardian to act as their representative.

13.1.2. Every driver taking part in a Car or Kart Race, Speed Event or Special Stage Rally shall sign a declaration in the following form:

'I understand that should I at the time of this event be suffering from any disability whether permanent or temporary which is likely to affect prejudicially my normal control of my vehicle, I may not take part unless I have declared such disability to the ASN which has,following such declaration, issued a licence which permits me to do so.'

13.1.3. Every driver taking part in a Car or Kart Race or other event requiring that the driver has passed a medical examination shall sign an undertaking in the following form:

'I undertake that at the time of the event to which this entry relates I shall have passed or am exempt from an ASN specified medical examination within the specified period.' (H.10.1.6).

13.1.4. Every entrant shall sign the following declaration:

'I have read and fully understood the regulations for Control of Drugs and Alcohol as contained in the Competitors' and Officials' Yearbook Regulations C1.1.7, D35.1, G15.1.4, H38 and have also fully familiarised myself with the information on the web sites referred to (www.motorsportuk.org, www.ukad.org.uk and www.wada-ama.org) in particular the UK Anti Doping Rules which have been adopted by Motorsport UK.

'Further, if I am counter-signing as the Parent or Guardian of a minor then in addition to the deemed consent to the testing of that minor UK (Anti-Doping Rule 5.7.2) I hereby confirm that I give such consent for the minor concerned to be so tested.'

Entrants must respect that Motorsport UK have the right to require alcohol and illicit drugs testing on any Person howsoever connected with any Entry operating within a Motorsport UK Permitted Event and shall at all times co-operate fully with the relevant procedures. These procedures are in addition to and not in substitution for any procedure undertaken by or at the instance of UK Anti-Doping (D.35.1.1).

13.1.5. Every entrant shall sign the following declaration:

'I hereby agree to abide by the Motorsport UK Safeguarding Policy and Guidelines and the National Sporting Code of Conduct.'

13.2.1. An entry may be submitted by an agent on behalf of the entrant but in that case the entrant shall himself sign and submit an entry form as soon as possible, and in any case before the commencement of the competition.

13.2.2. In the case of events restricted to holders of competition licences issued by Motorsport UK, or events listed on the FIA Calendar for National Events with Authorised Foreign Participation, the indemnities specified above need not be printed on the entry form but must be incorporated in the 'signing-on' documents.

13.2.3. For the purpose of completing an entry form the entrants signature may be either his signature in writing, a facsimile of his signature where the entry is made by facsimile, or in the case of web based electronic submission of entry (primarily by the use of an internet entry form), the organiser may accept that the entry has been signed in accordance with 12.1 and 13.2.2. If the entrant has positively agreed to be bound by the Regulations.

Acceptance of Entries

14.1. If the number of entries received exceeds the maximum number of competitors laid down in the SRs, those to be accepted shall be selected in the manner specified by the SRs.

14.1.1. If no method is specified, selection shall be at the discretion of the organisers whose decision shall be final (subject to H.30.1.3).

14.1.2. A representative of any sponsor or promoter of an event, championship, or series, may not take an active part in the organisation of the competitive or technical side of that event, if any competitor in the event is entered or sponsored by the individual or firm concerned.

Nomination of Reserves

15.1. Should any competitor be rejected in accordance with 14.1 he may be nominated as a reserve.

15.1.1. The number of reserves may not exceed 30% of the number of starters permitted.

Acknowledgement of Entries

16.1. Organisers shall acknowledge entries within seven days of receipt.

16.1.1. Organisers shall at the same time inform entrants whether their entry is accepted, refused, or a decision deferred.

Multiple Entries of a Vehicle

17.1. A vehicle shall not be entered more than once in the same competition unless two entries for the same vehicle are permitted in SRs.

17.1.1. In such a case the responsibility of the entry shall be shared jointly by both entrants and the vehicle shall only compete once with the same driver.

Ineligible Entries

18. It is strongly recommended that no Organising Committee shall accept an entry from any competitor who is closely related to, employed by or employs, one of the Senior Officials of the Event.

Entry containing a False or Incorrect Statement

19. An entry which contains a false or incorrect statement shall be null and void, the entrant may be deemed guilty of a breach of these Regulations and the entry fee may be forfeited.

Closing of Entries

20.1. The date specified in the SRs for the closing of entries shall, in the case of International Events, not be less than seven days before the date of the event. For all other events, it shall not be less than three days before the date of the event.

20.1.1. Exceptionally, for Clubmans events specified in 4.5, and Clubman Rallies, Trials, Autotests, Kart or Cross Country Events, the SRs may permit entries to be accepted up to one hour before the competition starts.

Entry

21.1. (H.30.1.1). An entry made and accepted in accordance with these Regulations and any relevant SRs is a contract between a Competitor and the Organisers, by which the Competitor agrees to take part in the competition for which he has entered unless prevented by force majeure, and the Organisers agree to comply with the conditions of entry provided that the Competitor has made every effort to take part in the competition.

21.1.1. A breach of such contract may be treated as a breach of these Regulations.

Official List of Competitors

22.1. (23). The organisers should place an official list of entries at the disposal of the Stewards, Senior Officials and competitors not less than 48 hours before the commencement of the event.

22.1.1. Exceptionally when the SRs permit entries to be accepted up to one hour before the competition (20) this list must be exhibited on an official notice-board prior to the start of the competition.

Contents of Programme

23.1. It is not compulsory to publish a programme, but an official list of entries and officials must be made available to all competitors and officials by the organisers.

23.1.1. If a programme is published, it shall contain the following information as relevant:

23.1.2. A statement in accordance with 9.1 of these Regulations.

23.1.3. A copy of the warning notice as detailed in 31.1 to 32.5.

23.1.4. The name of the Organising Club.

23.1.5. Place and date of the Meeting.

23.1.6. A short description and the timetable of the proposed events.

23.1.7. The names of the Stewards of the Meeting (indicating any appointed by Motorsport UK), the Clerk of the Course, Secretary of the Meeting, and Senior Officials.

23.1.8. A detailed list of the prizes assigned to each competition.

23.1.9. Names of the Entrants and Drivers with their allocated numbers, and the name of the invited club of which the competitor is a member.

23.1.10. It is recommended that provision is also made for a "sponsor's" name to be included.

Publishing of Entries (22)

24. The Organisers shall not enter on the programme or publish as entered the name of any competitor or driver in respect of whom they have not accepted an entry.

Rights of Organisers

25.1. The organisers may at their discretion:

25.1.1. Delete part of the course or event or ignore part of the records of the event in the case of bona fide unforeseen circumstances.

25.1.2. Distribute the awards based on intermediate results if, through bona fide unforeseen circumstances, the competition is stopped before its scheduled completion.

25.1.3. Offer additional awards.

25.1.4. Change the order in which events are run at a meeting which includes more than one competition or event, with the prior consent of the Stewards of the Meeting.

25.1.5. Forbid the participation of, or otherwise penalise, any driver or car appearing on examination to be ineligible for the competition, or a class therein, to which the entry refers.

25.1.6. Offer before the start of the competition the entrant of any driver or car liable to disqualification under 25.1.5 the option of transfer to an appropriate class, or competition, if such appropriate class or competition is scheduled at the meeting. Such offer shall be without prejudice to the imposition of other penalties.

25.1.7. Disqualify any car or competitor whose appearance, condition or performance is not of a standard appropriate to the event.

25.1.8. Check the eligibility of any vehicle and/or competitor before, during or after the competition provided that intention to do so after the competition is notified to the competitor concerned within half an hour of the publication of the provisional results. If necessary, the vehicle, or components thereof, may be sealed for subsequent inspection.

25.1.9. Require a vehicle to be dismantled by the entrant in order to check its eligibility or suitability as and when directed.

25.1.10. Require such components and/or samples as may be specified to be produced by the entrant as and when directed.

25.1.11. Require the entrant to defray any costs arising from the exercise of the rights given by 25.1.8 to 25.1.10, subject to any ruling as to costs made by the Clerk of the Course or the Stewards of the Meeting should the dismantling result from a protest (Section C).

25.1.12. Permit a change of car or driver(s) from those nominated in the Official Programme of the event on written application being made by the entrant not less than half an hour before the start of practice or competition (where there is no practice) and provided that:

(a) A change of only one or the other and not both is permitted, unless all the entrants and drivers agree in writing to such a change of both and;

(b) No change of car is permitted which would prevent the participation in the event of a reserve entry.

25.1.13. Exceptionally, in Hill Climbs and Sprints, such permission may be given after the conclusion of practice, but before the start of competitive runs or in the case of Circuit Racing, after qualifying but before the start of the Race and are to be started from the back of grid, ahead of those with a 10 second delay, subject to the vehicle having completed 3 laps qualifying.

25.1.14. Disqualify at any time during an Event any Licence holder or other Person connected with the Entrant considered as possibly unfit by reason of health, consumption of alcohol or prohibited substances, and with the exception of road sections of Rallies or Trials, disqualify any competitor found smoking whilst participating in the event (D.35, G.5.2, G.15 and H.38.).

25.1.15. Disqualify any person convicted at Law of an offence committed during the event, and report such person to Motorsport UK (H.37.1.1).

25.1.16. Reject any claim for expenses arising from the event, incurred by any person either taking part in the event or assisting a competitor.

25.1.17. Specify the manner in which a tie shall be resolved should the provisions of the Regulations not produce a result.

25.1.18. Specify within any of the Regulations or other official communications relating to an event or within Championship regulations for an event the following:

(a) The number and location of any Parc Fermé (R.31.2.11).

(b) The instructions for the placement and retention of vehicles in Parc Fermé.

(c) Specific conditions attaching to Parc Fermé and to the vehicles placed therein including:

(i) The carrying out of any works on the vehicles (R.38.2).

(ii) The addition or removal or examination of any parts or fluids on or in the vehicles.

(iii) The examination, interrogation or downloading of any data retained or stored by or within any medium currently known or existing in the future.

(iv) The persons permitted to enter and/or to remain in Parc Fermé and any conditions attaching to such persons.

(v) The extent to which any Parc Fermé shall be a secure area.

(vi) If applicable, the route to Parc Fermé.

Publication of Results

26.1. Detailed Provisional Results, in writing, must be made available for inspection by any competitor as follows:

26.1.1. Race and Speed Events – within two hours of the end of each race, or the conclusion of a speed competition.

26.1.2. Non-Speed Events – within two hours of the last car finishing the competition, or

26.1.3. Within seven days of the finish of the competition, by post to each entrant at the address given on his entry form or by electronic communication where the address is disclosed.

26.1.4. Where, through force of circumstances, it proves impractical to produce the results within two hours of the finish, 26.1.3. will apply, notwithstanding any statement to the contrary in the SRs.

26.2. The date and time of issue of all Provisional and Final Results should be stated on them, and they should be signed by the Clerk of the Course or his Deputy.

26.3. These Results become Final when any Protest or Appeal time has expired and all official enquiries by the Clerk of the Course and/or Race Director, all technical matters, and all outstanding Protests or Appeals have been settled.

26.4. Within 14 days after each event the following information must be sent to Motorsport UK:

26.4.1. A programme, or list of starters (including each starter's competition licence number when appropriate) and a copy of any Official Instructions, Route Book(s), Route Card(s), etc.

26.4.2. A copy of the results (provisional or final as the case may be).

26.4.3. A résumé of any protests, note of action to date, note of any fines imposed, etc.

26.4.4. A report of the Stewards of the Meeting (G.2.6) (This report is not essential if a Motorsport UK Steward has been appointed, and need only be as brief as is applicable). If hearing an appeal delays finalisation of results beyond 14 days, a final Steward's Report and a copy of the results must be submitted to Motorsport UK when the Stewards have announced their decision.

26.4.5. The appropriate fees and any fines.

26.4.6. If appropriate, details required by Standard Condition 17 of the Motor Vehicles (Competitions and Trials) Regulations.

Payment of Starting and Prize Money and Presentation of Awards

27.1. Unless the SRs stipulate otherwise the Organisers shall distribute all awards, starting and prize money within 21 days after the results of a competition have been finalised.

27.1.1. The distribution of prizes must not commence until half-an-hour has elapsed after the publication of the provisional results of a competition.

27.2. The rewards offered in events shall be limited as follows and will only be presented to any competitor who has produced all the documentation necessary to prove his eligibility for the event:

27.2.1. No starting or appearance money shall be paid at events of below National status.

How to advertise on Facebook

When it comes to a platform like Facebook, there is good and bad news for motorsport event organisers. The bad news is that unsponsored or 'organic' posts typically reach only one or two per cent of your page's followers, unless they are particularly strong posts that hit the spot with that two per cent and are quickly shared to a wider audience.

The good news is that if you have some budget, then you can unlock a wealth of potential with Facebook's advertising functionality. This allows you to target and reach defined audiences, including those who do not already 'like' your page, often for a relatively modest outlay. This is a great way of marketing your event to new people.

Sounds great. How do we do it?

Step 1

Choose which post you wish to promote. This is where you should try to think strategically; is your post relevant to the specific audience you want to target, and does it have a call-to-action, such as a link to the page of your website where they can find or sign-up to receive relevant information? Once you have selected the post you want to promote, click the blue **'Boost Post'** button.

Step 2

Next, you need to set-up your campaign. Choose the objective of your boosted post and the audience you want it to reach. If you want to reach new audiences, select **'People you choose through targeting'**. You can then target an audience by location, gender, age range and interests.

Step 3

Set the budget for the promotion and decide how long you want it to run. Facebook will give you a predicted reach depending on the amount of money you wish to spend and the length of the promotion. Note the minimum budget is £1.00 a day. If your daily budget amounts to less than this the promotion will not run!

Step 4

Enter your payment details and submit your post to Facebook for approval. Facebook will then review your post and notify you when it has been approved. This normally happens very quickly. Once approved, your sponsored post will be live.

Step 5

Track and evaluate your post to make sure it's successful and improve it for next time. You can see the reach and engagement (comments, reactions and shares) data for all your posts using the **'Insights'** tab at the top of your page. Or you can click on the **'Ad tools'** tab to have a look at your current and recent promotions.

Any other tips?

Why not include a call-to-action button in your post to drive people to take action, like visiting your website, signing up for a newsletter, getting in touch or entering an event?

More marketing tools to consider | **See page 244**

27.2.2. The return of entry fees, in whole or part, is permitted, providing such payment is equally distributed among all eligible competitors.

27.2.3. At all events up to National status, Bonus Money may only be paid by Commercial Companies in respect of individual agreements with competitors.

Unauthorised Competitions

28.1. The organisation or holding within the territory of Motorsport UK of any vehicle competition otherwise than in accordance with these Regulations shall render every person connected therewith or taking part therein, whether as promoters, organizing committee, driver, official or otherwise, liable to the consequences as a breach of these Regulations.

28.1.1. If such a competition is included in a meeting for which an organising permit has been granted, the permit may be declared null and void, and the organisers may be ordered to return to the entrants all entry fees received from any competitor at such meeting.

Postponement, Abandonment or Cancellation of an Event

29.1. A meeting or an event forming part of a meeting shall not be postponed, abandoned or cancelled unless provision for so doing is made in the SRs, or the Stewards of the Meeting have taken action under G.2.4.

29.1.1. In the event of cancellation or postponement for More than 24 hours, entry fees must be returned in full, unless the SRs have provided for a specified amount to be retained for administrative expenses.

29.1.2. Postponement shall be subject to approval by Motorsport UK of the proposed new date.

Insurance

30.1. Motorsport UK will arrange Insurance in respect of legal liability for all events authorised by a Permit. The Insurance specifically names:

30.1.1. Motorsport UK Association Ltd.

30.1.2. The Motorsport UK Registered Club organising the event.

30.1.3. Their officials.

30.1.4. The entrant and driver (in races, speed events, autotest, special stages and the private land section of trials and cross-country events).

30.1.5. The landowner or any Government or Local Authority.

30.1.6. Any track or circuit owner or sponsor. Further details are given in Part 3, Appendix 2.

30.2. Attention is drawn to the exclusions detailed in Part 3, Appendix 2.

30.3. The organisers shall pay all fees due in respect of such insurance as set out in Part 3, Appendix 1.

30.4. The organisers shall comply with the terms of the master insurance policies effected by Motorsport UK, the principal terms of which are summarised in Part 3, Appendix 2.

Warning Notices

31.1. The following notices should be prominently displayed as appropriate.

31.1.1. At any entrance to an event or part of an event on private ground – Notice 'A'.

31.1.2. (E.2.4). Unless any enclosure is surrounded by un-climbable fencing, in the area between the enclosure and the course there shall be displayed at intervals Notice 'B' or notices stating that 'This area is Prohibited and the public are not permitted'.

31.1.3. At Race Circuits the following should be displayed:

- at the entrance gate (if any) to the pits,
- in individual pits and
- on the signalling wall opposite the pits.

'Warning, the Pits and Pit Lane are areas of potential danger and great care should be exercised at all times. Children under the age of 16 are not allowed in these areas'.

31.1.4. At any means of spectator or vehicular access to a Rally Special Stage – Notice 'C'.

31.1.5. In any area of particular danger on a Special Stage (i.e. escape roads etc.) – Notice 'B'.

31.1.6. Except where provided for in 31.1.2 and 31.1.5 the limits of spectator access may be defined by the display of Warning Notice D.

32.1. These notices, which may be purchased from Motorsport UK, should be visible at any other suitable points, so that no person may be present at the event without having them brought to their attention.

32.2. Organisers may also use a notice stating 'It is a condition of your presence that you will obey the instructions of Marshals in relation to the Safety of yourself and others'.

32.3. Admission may not be obtained to any enclosure whether or not there is a charge, without a suitable pass and/or ticket (G.13.1 to 13.2).

32.4. The programme of the meeting, all tickets, badges, tabards, labels (including car labels) and passes of admission whether for spectators or officials shall bear or be accompanied by a copy of Notice 'A'.

32.5. Where the wording is printed on the reverse side of a ticket, armlet or lapel badge, the words 'for conditions of admission see over' should appear on the face of the ticket, armlet or lapel badge.

Scrutineering

33.1. A Motorsport UK licensed Scrutineer, of the appropriate grade, must take charge of the Scrutineering Team at all Races, Speed Events, Kart Races, Road and Stage Rallies, Competitive Safaris, Hill Rallies and at all other events of National or International Status. For all other events, the scrutineering may be carried out by a suitably experienced scrutineer appointed by the organisers.

33.2. The main purpose of Pre-Event Scrutineering is to check, as far as possible under the prevailing conditions, the safety of the vehicle and safety equipment for compliance with Technical Regulations and to superficially check its eligibility for a particular class or category (G.6.7, H.32, J.3).

33.2.1. If a vehicle component or item of Personal Protective Equipment is found not to comply with required Standards or is in poor or dangerous condition the Chief Scrutineer may impound that item for the duration of the meeting. At the close of the meeting the item will be made available for return to the competitor. Should the item not be collected within 42 days of the event the item may be disposed of.

33.3. An essential part of the Pre-Event Scrutineering should be a sound test.

Procedure for the Testing of Fuel (C.4.1, C.4.2)

34.1. The following regulations must be read in conjunction with C4.1 and C4.2.

34.1.1. Fuel testing may be carried out at any time, before, during, or after a Competition on the instructions of Motorsport UK, the Clerk of the Course, Technical Commissioner, Chief Scrutineer, Eligibility Scrutineer or the Stewards.

34.1.2. The Clerk of the Course must always be notified of the intention to carry out fuel testing.

34.1.3. New unused Motorsport UK approved sample containers, capable of being sealed by the authorised sampling official must always be used for the storage of fuel samples.

34.1.4. Three samples will be taken and must individually be sealed and labelled in separate Motorsport UK approved containers as per 34.1.3. A Motorsport UK Sealing Certificate must be completed and distributed as detailed on the Certificate. For Comparison Testing only one sample need be taken, providing the vehicle remains secured in Parc Ferme to enable subsequent samples to be taken should this first sample confirm non-compliance.

34.1.5. Deleted.

34.2. Analysis Testing

34.2.1. Each sample must be a minimum of 1 litre.

34.2.2. Where there are less than 3 litres available, such that only two minimum 1 litre samples are available the competitor forfeits their right to select a sample (34.2.5) and the result of the Motorsport UK first test (34.2.7) will conclusively determine the compliance or non-compliance of the fuel (34.2.4).

34.2.3. If only a single minimum 1 litre sample is available, that sample alone will be tested in accordance with 34.2.7, and that test will conclusively determine the compliance or non-compliance of the fuel (34.2.4). Notification will be given under 34.5.

34.2.4. The results of all analysis testing will be compared for compliance with the relevant specification, detailed in Section B: Pump Fuel, in accordance to the reproducibility of the test method.

34.2.5. Subject to 34.2.2 and 34.2.3, the Entrant is entitled to select one of the samples for their retention (the "Entrant's Sample") and to nominate a testing laboratory on the list of the United Kingdom Accreditation Service (UKAS) for the independent testing of that sample, if required as per 34.2.9.

34.2.6. The remaining samples must be delivered by the organisers to Motorsport UK, normally within 10 days of the event.

34.2.7. Motorsport UK will then select one of these two samples at random and arrange testing of the selected sample at a laboratory on the UKAS list. The breaking of the seal must be witnessed by an appointed representative of Motorsport UK.

34.2.8. The result of this Motorsport UK first test will be notified pursuant to 34.5.

34.2.9. If the result of this Motorsport UK first test indicates non-compliance (34.2.4), the Entrant may, within 14 days of being notified of this non-compliance (34.2.8), submit the Entrant's Sample for testing at the laboratory nominated by them (34.2.5) and at their expense (34.6.2). The Entrant must be given the opportunity to be present at this test and the test – including the breaking of the seal(s) – must be witnessed by an appointed representative of Motorsport UK.

34.2.10. If the Entrant does not submit the Entrant's Sample for testing within the said 14 days (34.2.9), or if the result of their test confirms non-compliance (34.2.4), the fuel will be deemed ineligible and notification will be given under 34.5.

34.2.11. If the result of the Entrant's test indicates compliance (34.2.4), then Motorsport UK will arrange for the remaining third sample to be tested by a laboratory on the UKAS list not previously used in this particular testing process. The Entrant must be given the opportunity to be present at this test and the test – including the breaking of the seal(s) – must be witnessed by an appointed representative of Motorsport UK.

34.2.12. Where testing takes place under 34.2.11, the result of this third test will conclusively determine the compliance or non-compliance of the fuel (34.2.4). Notification will be given under 34.5.

34.3. Comparison Testing

34.3.1. Each sample must be a minimum of 50ml.

34.3.2. The results of all comparison testing will be compared for compliance with the results obtained from a sample taken from the same controlled source, at the beginning of the Event.

34.3.3. Comparison testing will only be implemented where fuel for the Event is mandated by the organisers for all competitors in the class(es) to be drawn from a single controlled source. It is the sole method used when use of control fuel is mandatory.

34.3.4. One sample, selected at random, will normally be tested on-site in accordance with Motorsport UK approved procedures, by the authority nominated in those procedures.

34.3.5. If the result of this test indicates compliance (34.3.2), no further action will be taken.

34.3.6. If the result of this test confirms non-compliance (34.3.2), the Entrant will be informed and will be given the opportunity to select one of the two remaining sealed samples (34.1.4) for testing in their presence and in accordance with the same Motorsport UK approved procedures (34.3.4).

34.3.7. If the Entrant chooses not to have a sample tested, or if the result of this second test confirms non-compliance (34.3.2), the fuel will be deemed ineligible and notification given under 34.5.

34.3.8. If the result of this second test indicates compliance (34.3.2), the remaining third sample will be tested in accordance with the same Motorsport UK approved procedures (34.3.4); the Entrant must be given the opportunity to be present at this test.

34.3.9. Where testing takes place under 34.3.8, the result of this third test alone will conclusively determine the eligibility of the fuel (34.3.2). Notification will be given under 34.5.

34.4. Storage of Samples

34.4.1. Samples retained by Motorsport UK or its authorised Officials must be stored in a secure location.

34.4.2. If there is any evidence that any seal and/or container has been tampered with, then that sample will be deemed to have failed the relevant test.

34.5. Notification of Results

The result of either Analysis or Comparison fuel testing will be reported to Motorsport UK or its authorised official and must be communicated to the Clerk of the Course, Technical Commissioner(s), Chief Scrutineer and Eligibility Scrutineer prior to publication (C3.1.1).

34.6. Cost of Testing

34.6.1. Unless fuel testing is specifically authorised by Motorsport UK, the cost of testing shall be initially borne by the Club, organisation or individual requesting the test. However, whenever the conclusion of the testing procedure confirms non-compliance, then the Entrant shall be ultimately responsible for all costs and fees arising from the testing procedure.

34.6.2. Where the Entrant chooses to submit a selected sample for testing at a laboratory of their own choice (34.2.9), they will be responsible for all charges relating to that testing.

34.8. The Testing of Vehicle Fluids other than fuel

34.8.1. Three samples, each of equal volume, will be taken at the event/competition venue and must be labelled and sealed. One sample will be tested by a Motorsport UK approved official using approved test equipment in accordance with Motorsport UK approved procedures.

34.8.2. The principles applied to the testing of fuel samples in 34.3.2 to 34.7. must be followed as appropriate for the testing of such other vehicle fluids.

Procedure for Control of Drugs

35.1. Organisers must respect that Motorsport UK have the right to require alcohol and illicit drugs testing on any Person howsoever connected with any Entry operating within a Motorsport UK Permitted Event and shall at all times cooperate fully with the relevant procedures. These procedures are in addition to and not in substitution for any procedure undertaken by or at the instance of UK Anti-Doping.

35.1.1. Deleted.

35.1.2. Deleted.

Tyre testing procedure for the investigation of performance enhancing products (TTP) (C4.3)

36.1. The following regulations must be read in conjunction with C4.3.

36.2. TTP may be carried out at any time, before, during, or after a Competition on the instructions of Motorsport UK, Clerk of the Course, Technical Commissioner, Chief Scrutineer, Eligibility Scrutineer or the Stewards.

36.2.1. The Clerk of the Course must always be notified of the intention to carry out TTP.

36.2.2. New unused Motorsport UK approved sample containers, or other containers approved by Motorsport UK, capable of being sealed by the authorised sampling official must always be used for the storage of individual tyre rubber samples.

36.2.3. Where there is the possibility that the tyre(s) may have "picked up" rubber from the track surface, the entrant shall be permitted (or may be required by the Eligibility or Chief Scrutineer) to remove the "pick up" from the tyre(s) with a mechanical device, such as a scraper. Rubber residue from the cleaning process must be collected and retained by the Chief Scrutineer for further testing as appropriate, and in a separate container as per 36.2.2.

36.2.4. Removal of rubber samples from the tyre must be done in a controlled and preferably clean environment within the Venue, such as in the scrutineering bay, and always under the supervision of the Chief Scrutineer or Eligibility Scrutineer. Removal onto a clean surface is essential. The tyre rubber sample(s) will then be subjected to testing in the approved manner as detailed below. The competitor (or in the case of minors, the Competitor and PG) shall have the right to be present.

36.2.5. Three samples will be taken and must be sealed and labelled in separate Motorsport UK approved containers as per **36.2.2.** A Motorsport UK Sealing Certificate must be completed and distributed as detailed on the certificate. Prior to sealing, the samples should be wrapped in clean aluminium foil to prevent contact with any plastics.

36.2.6. Each sample must be a minimum of 1mm width, 25mm length and 0.3mm depth.

Motorsport UK

OPEN
Monday – Friday
9.00–17.00

Tel: 01753 765000

Membership Team:
Tel: 01753 765050

Website:
www.motorsportuk.org

36.2.7. Each sample shall be placed and sealed in a Motorsport UK tamper-proof evidence bag:

36.3. Analysis Testing

36.3.1. The results of all analysis testing will be compared for compliance with the relevant tyre manufacturer's specification for that model retained by Motorsport UK.

36.3.2. The Entrant is entitled to select one of the samples for their retention (the "Entrant's Sample") and to nominate a testing laboratory on the list of the United Kingdom Accreditation Service (UKAS) for the independent testing of that sample, if required as per 36.3.6.

36.3.3. The remaining two samples must be delivered by the organisers to Motorsport UK, normally within 10 days of the event.

36.3.4. Motorsport UK will then select one of these two samples at random and arrange testing of the selected sample at a laboratory on the UKAS list, or a laboratory approved by another ASN. The breaking of the seal must be witnessed by a representative of Motorsport UK.

36.3.5. The result of this Motorsport UK first test will be notified pursuant to 36.6.

36.3.6. If the result of this Motorsport UK first test confirms noncompliance (36.3.1), the Entrant may, within 14 days of being notified of this non-compliance (36.3.5), submit the Entrant's Sample for testing at the laboratory nominated by them (36.3.2) and at their expense (36.7.2). The Entrant must be given the opportunity to be present at this test and the test, including the breaking of the seal(s), must be witnessed by a representative of Motorsport UK.

36.3.7. If the Entrant does not submit the Entrant's Sample for testing within the said 14 days (36.3.6), or if the result of their test confirms non-compliance (36.3.1), the tyre(s) will be deemed ineligible and notification will be given under 36.6.

36.3.8. If the result of the Entrant's test confirms compliance (36.3.1), then Motorsport UK will arrange for the remaining third sample to be tested by a laboratory on the UKAS list not previously used in this particular testing process. The Entrant must be given the opportunity to be present at this test and the test, including the breaking of the seal(s), must be witnessed by a representative of Motorsport UK.

36.3.9. Where testing takes place under 36.3.8, the result of this third test will conclusively determine the compliance or non-compliance of the tyre(s) (36.3.1). Notification will be given under 36.6.

36.4. Comparison Testing

36.4.1. The results of all comparison testing will be compared for compliance with the results obtained from a sample taken from the same manufacturer and model of tyre, from the same controlled source, at the beginning of the Event.

36.4.2. Comparison testing will only be implemented where tyres for the Event are mandated by the organisers for all competitors in the class(es) to be drawn from a single controlled source.

36.4.3. One sample, selected at random, will normally be tested on-site by a Motorsport UK approved official and in accordance with Motorsport UK approved procedures.

36.4.4. If the result of this test confirms compliance (36.4.1), no further action will be taken.

36.4.5. If the result of this test confirms non-compliance (36.4.1), the Entrant will be informed and will be given the opportunity to select one of the two remaining sealed samples for testing in their presence.

36.4.6. If the Entrant chooses not to have a sample tested, or if the result of this second confirms noncompliance (36.4.1), the tyres will be deemed ineligible and notification given under 36.6.

36.4.7. If the result of this second test confirms compliance (36.4.1), the remaining third sample will be tested; the Entrant must be given the opportunity to be present at this test.

36.4.8. Where testing takes place under 36.4.7, the result of this third test alone will conclusively determine the eligibility of the tyre(s) (36.4.1). Notification will be given under 36.6.

36.5. Storage of Samples

36.5.1. Samples retained by Motorsport UK or its authorised Officials must be stored in a secure location.

36.5.2. If there is any evidence that any seal and/or container has been tampered with, then that sample will be deemed to be invalid.

36.6. Notification of Results

The result of either Analysis or Comparison tyre testing will be reported to Motorsport UK or its authorised official and must be communicated to the Clerk of the Course, Technical Commissioner(s), Chief Scrutineer and Eligibility Scrutineer prior to publication (C3.1.1).

36.7. Cost of Testing

36.7.1. Unless TTP is specifically authorised by Motorsport UK, the cost of testing shall be initially borne by the Club, organisation or individual requesting the test. However, whenever the conclusion of the testing procedure confirms non-compliance, then the Entrant shall be ultimately responsible for all costs and fees arising from the testing procedure.

36.7.2. Where the Entrant chooses to submit a selected sample for testing at a laboratory of their own choice (36.3.6), they will be responsible for all charges relating to that testing.

Appendix 1: Warning Notices

Notice 'A'

Notice 'B'

Notice 'C'

Notice 'D'

(E) Circuits and Venues

Track Licences

1.1. Motorsport UK Track Licences may be issued to the owner or operator of a course. Where the Licence holder is not the owner, a written agreement must exist between the owner and the prospective Licence holder setting out the responsibilities of each to ensure that all requirements of the Licence are met.

1.1.1. The organisation of an event must not be announced or advertised until a Track Licence has been agreed by Motorsport UK (Q.1). Should an unauthorised event (D.28) be held on any licensed course, the Licence may be revoked and Motorsport UK may decline to issue any further Track Licence.

1.1.2. A current Track Licence (or a photocopy) must be displayed in a prominent position at the track, or be available for inspection in the case of a temporary track. The Licence is only valid for the days on which a Motorsport UK Event Permit has been issued and shall have no validity on days when the Motorsport UK Permit is not in force.

1.1.3. Track Licence fees are included in Part 3, Appendix 1.

1.1.4. The Clerk of the Course shall always have full control of the course (including pits and paddock) and all areas between the course and enclosures from the commencement of practise until all competing cars have left the course at the conclusion of the meeting.

1.1.5. All events will be run in the direction specified on the track licence.

National Track Licence

1.2.1. Motorsport UK can grant a National or Interclub Track Licence to a Race Circuit or Speed Event venue (including Rallycross venues) for an individual meeting or a series of meetings, or, if the track is a permanent one, until the end of the current year.

1.2.2. Motorsport UK Track Licences are issued subject to the Conditions contained within them and are only valid for periods during which a valid Motorsport UK Organising Permit is also in force. Motorsport UK can refuse to grant or withdraw a Track Licence at any time without stating a reason.

International Track Licence

1.3.1. Application for an International Track Licence for a Race Circuit or Speed Event venue must be made to the FIA through Motorsport UK.

1.3.2. The FIA can licence a track for a stated period and, after consultation with Motorsport UK, can refuse to grant or withdraw an International Track Licence applicable in the UK at any time and without stating a reason.

Applying for a Track Licence

1.4. The minimum information normally required by Motorsport UK for issuing a Track Licence is:

1.4.1. Racing Circuits – Outline plans and Motorsport UK Inspector's report.

1.4.2. Other Speed Event Courses – 1/2500 scale plan and Motorsport UK Inspector's report.

1.5. The following information is also required:

1.5.1. Length of course and position of start and finish and method of marking.

1.5.2. Position of paddock and pits (if any).

1.5.3. Siting of spectator and Official enclosures and distance from course.

1.5.4. Type of fencing around enclosures.

1.5.5. Type and siting of protective barriers between course and enclosures.

1.5.6. Siting of ambulance(s), rescue vehicles, first aid headquarters and medical staff, and minimum number of staff and ambulances.

1.5.7. Siting of flag Marshals and observers and minimum number of these Officials.

1.5.8. Siting of fire equipment and breakdown vehicles and minimum provision.

1.5.9. Siting of Clerk of the Course's Headquarters, Timekeeping box and Scrutineering area.

1.5.10. Locations and type of communications system around course available to Officials.

1.5.11. Location of nearest outside telephone and number.

1.5.12. Address and telephone of nearest hospital available to receive casualties.

1.5.13. Number of starters and types of vehicle.

1.5.14. Any special features of course, including type of road surface and width.

1.5.15. The braking area (in the case of speed events).

1.5.16. An outline of the estate or grounds on which the track or course is situated, marked with the position of any footpaths or bridleways which may pass on or near the estate.

1.5.17. The location and operation of any trackside flashing yellow warning lights.

1.5.18. The presence of any structure or obstruction, including advertising material adjacent to the track, which could be the first object to be struck by a car leaving the course, shall be subject to the prior approval of Motorsport UK.

Race and Speed Events

2.1. Only competing cars are allowed on the course during an event, except as instructed by the Clerk of the Course to deal with a serious emergency, when flag Marshals must warn competing Drivers. The Clerk must be satisfied that the Driver of any vehicle allowed on the course knows the Rule of the Road in operation.

Note: Throughout these sections an asterisk(*) indicates a requirement for additional information to be printed in the Supplementary Regulations (SRs). Text shown in Italics indicate a Regulation which may be amended in the SRs. Text shown in red indicates a new or amended regulation for 2022.

2.1.1. The recommended positioning of Emergency Vehicles will be indicated on the Track Licence should one be issued. For events running without a Track Licence the recommended positioning of any Emergency Vehicles should be indicated in the Event Regulations.

2.1.2. In the interests of safety, animals should not be admitted to Race, Speed or Kart venues, but if present they must be secured inside a vehicle or building whenever practice or competition is taking place, working dogs excepted.

2.1.3. The holder of the Track Licence is responsible for maintaining a register of best performances achieved on the track and a permanent medical record book detailing all incidents involving injury.

2.1.4. Circuit and venue owners are reminded of their responsibility to inform the Local Environmental Health Officer of any serious accidents (see RIDDOR 95 or contact the Motorsport UK Technical Department).

Safety Requirements

2.2.1. In issuing a Licence, Motorsport UK will specify the types of vehicles which can compete and the maximum number which can start simultaneously in any one race. The number of vehicles Permitted on the circuit at any one time for practising must not exceed the number Permitted in a race by more than 20%, without written approval (Q.12.4.4).

2.2.2. Except in the case of handicap events where each car will be allocated a suitable area at the discretion of the Motorsport UK Timekeeper, the starting grid shall be laid out in accordance with Motorsport UK Track Requirements. The start/finish line and, where applicable, the grid positions, shall be clearly marked on the road surface. The track must be thoroughly swept and in good repair, and kept swept as necessary during the meeting.

2.2.3. The course must not present any unreasonable hazards to either Competitors or spectators. The width of the track normally shall not be less than 9m for Race circuits and 3.5m for Sprints and Hill Climbs.

2.2.4. When there are no natural features defining corners (eg on airfields), they must be marked out by signs indicating distance to the corner.

2.2.5. The siting of all cameras, other than in the enclosures noted in 2.4 below, is subject to Motorsport UK approval.

2.2.6. Aircraft under the control of the event Organisers should never be allowed to operate below 500ft nor at any time, fly directly over the venue while motor sport is in progress (R.39.3).

2.2.7. Further special safety precautions must be complied with before a Licence will be issued for a circuit to be used for Truck Racing (see Q.14).

Communications

2.3. There must be an efficient means of communication (either visually, by telephone or radio) between the Clerk of the Course, Observers, First- Aiders and other staff, unless otherwise specified in the Track Licence (Q.1). There must be a radio link (not CB) to all emergency vehicle(s).

Enclosures (D.31.1.2, D.32.3)

2.4. All enclosures at race circuits must be protected by a substantial barrier capable of stopping a car.

2.4.1. Enclosures at speed events not protected by a permanent barrier (if permitted at all) must be a minimum 60m from the edge of the course unless otherwise authorised by Motorsport UK.

2.4.2. Spectators shall be allowed at corners only when there is some form of protection between them and the course.

2.4.3. In special circumstances this protection may be given by multiple rows of securely banded tyres, straw bales or other material approved by Motorsport UK.

2.4.4. Any place where spectators may congregate, (eg grandstands, the start and finish line, opposite the pits etc) shall be protected by a substantial barrier.

2.4.5. Ideally there should be a clear space of at least 6m between any barrier and the spectators.

2.4.6. Where practicable, there should be a verge of at least 3m between the edge of the course and any safety barrier.

2.4.7. No car parked in a spectator enclosure should be less than 10m from the front of the enclosure.

2.4.8. If unauthorised people penetrate beyond the authorised enclosure, the programme should be suspended until they have been removed.

Timing

2.5. At permanent race circuits, an adequate sheltered area (the Timing Box) must be provided to accommodate at least one Timekeeper for every four cars Permitted on the track for practice, plus a further three assistants. The Box must provide an adequate view of the track, the start/finish signals and the start/finish line. In the case of new circuits the position and design of the Timing Box must comply with the specification laid down by Motorsport UK.

2.5.1. At all other venues, including temporary ones, Timekeepers must be provided with adequate covered accommodation for themselves and their equipment.

Marshals' Posts

3.1. Officials' posts, equipped in accordance with 3.2 and 3.3, must be established in accordance with the Motorsport UK Track Licence to ensure the whole of the course is kept under observation at all times.

3.1.1. Each post must be able to communicate by sight with the preceding and following one. If appropriate, relay posts will be specified to fulfill this condition. The distance between consecutive posts (disregarding relay posts) should not exceed 500m.

3.1.2. There should be sufficient Marshals at each post to carry out signaling, intervention and surveillance duties during practice, qualifying and racing.

3.1.3. Flashing yellow warning lights may be installed to supplement or replace the yellow flag signals.

3.1.4. Red lights to supplement or replace red flag signals may also be installed.

3.1.5. The location of these lights around the course will be subject to prior approval by Motorsport UK.

3.1.6. Where there is closed-circuit TV surveillance of the course, the lights may be operated from Race Control.

3.1.7. Where there is no closed-circuit TV surveillance, the lights shall be operated from the Observers' posts.

Race Events

3.2. At race circuits all posts for officials outside of the pits and normal enclosures shall be adequately protected, and provide dry, hard standing.

3.2.1. Each post should have an Observer's 'hut', from which to observe, write reports and telephone Race Control.

3.2.2. Ideally, there should also be a weatherproof area in which marshals can place their bags, etc, and which could be used for storing post equipment, brooms, suitable absorbent material or neutraliser, etc.

3.2.3. The following equipment is recommended (as appropriate) at Race meetings (minimum flag and panel size as Q12.24.8):

At each Marshal's post:

- Two brooms
- Two shovels
- One container, minimum 3 litres, of suitable oil absorbent material
- At least 3 fire extinguishers each containing not less than 6kg of extinguishing product suitable for extinguishing vehicle fires
- One hazard board
- One safety car board (SC in black 40cm high on white background)
- One green flag
- One white flag
- One blue flag
- Two yellow flags
- One yellow and red flag
- One red flag
- One purple flag (if required).

At the Start/Finish post:

- As above, plus
- National flag
- Black & white diagonally split flag (or panel)
- Black flag or panel, with orange disc
- Black flag or panel
- Black/white chequered flag
- The following boards:
  - 1, 2, 3, 5 and 10 minutes
  - 5 and 30 seconds
  - Start delayed
  - Wet race/Qualifying session
  - 5 second penalty
  - 10 second penalty
  - 1 minute penalty
  - Stop engines
  - Rear lights on
  - Number board to show Competitor's number (white on black, up to three figures)
  - Stop/Go penalty
  - Drive Through penalty

Speed Events

3.3. Speed events. There should be sufficient Marshals at each main post. The minimum equipment required is:

- One stiff broom
- One shovel
- One container, minimum 3 litres, of suitable oil absorbent material
- At least two extinguishers each containing not less than 6 kg of extinguishing product suitable for extinguishing vehicle fires.

Drag Strips

3.4. For temporary drag strips, if there are no protective barriers available, the spectator enclosures at the start line are to be sited 60m from the edge of the course, fanning out to at least 180m from the edge of the course at the finish line. Spectator viewing is restricted to within 30 metres from the start line.

3.4.1. Strip distance and shut down area, for non-prepped venues, shall be:

(a) 1 mile – shut down distance a minimum of 1200 metres

(b) ½ mile – shut down distance a minimum of 700 metres

(c) ¼ mile – shut down distance a minimum of 400 metres.

(d) ⅛ mile – shut down distance a minimum of 250 metres.

Scrutineering Area

4.1. The minimum facilities for Scrutineers are as follows:

Race Meetings

4.1.1. Covered accommodation adequate for the inspection of two cars simultaneously and the handling of their relevant documentation.

4.1.2. Satisfactory facilities for inspecting the underside of a car.

4.1.3. Whenever cars with weight limitations are competing, weighing equipment must have annual Weights and Measures certification (January - December).

4.1.4. When weighing is carried out with portable electronic 'pad' scales, a current Weights and Measures Certificate is not essential, but if not available the scales must be checked with certified weights compatible with the range of cars to be weighed, prior to use or upon request by the Stewards of a Meeting.

All Meetings

4.2.1. A clear flat area, large enough for a car to stand on.

4.2.2. An area for noise tests (J.5.17).

4.2.3. A suitable area for Parc Fermé.

Pits

5.1. Any pit lane must be separated from the course by a substantial barrier which must provide ample entrance and exit for single vehicle.

5.1.1. The area between the barrier and the pits must be at least 6.5m (and preferably 8m) in width.

5.1.2. The working area in front of the pits (which must be at least 2.5m wide) must be marked by a white line least 10cm wide extending the length of the pits.

5.1.3. The front of the pits must be of substantial construction and each pit must be at least 4m long.

5.1.4. There shall be an adequate number of pits for the cars in a race.

5.1.5. The pits and pit lane at any new circuit must comply with FIA requirements.

Bridges

6.1. All bridges over the track must be of substantial construction and both the bridge and its approaches must be shielded to eliminate all view of the track from these areas.

6.1.1. No people or vehicles are permitted to stop on a bridge while practice or racing is in progress.

6.1.2. The floor and sides of each bridge must be constructed so that no object can fall from the bridge onto the track.

6.1.3. Bridges must have sufficient clearance above the track to allow passage of emergency service vehicles.

Fire Precautions and Equipment

7.1. All fire extinguishers used at Race and Speed Events must have a valid manufacturer's (or agent's) certificate confirming they are in working order, issued immediately prior to the start of each season's racing.

7.1.1. This certificate must be available for inspection by Stewards (Q.8.1).

7.2. At Race Meetings, manned Fire Posts (equipped as required by 3.2.3.) must be located and clearly marked at intervals round the circuit. Other acceptable extinguishers may be deployed at unmanned posts or by mobile units.

7.3. Additional extinguishers should be located:

7.3.1. At marked points in the paddock

7.3.2. In the pit areas

7.3.3. At the Scrutineering Bay

7.3.4. In every medical room or centre.

7.4. In events involving the refuelling of cars where more than five gallons of fuel is held in any one pit, there must be two fire tenders and crew in attendance, appropriately equipped and with immediate access to the pit area (Q.12.25).

7.5. A Large Spill Kit is to be provided in all paddock areas.

Emergency Rescue Vehicles and Equipment

8. Licensed Rescue Vehicles must comply with the Specifications detailed in Section F. The positioning of emergency vehicles will be indicated on the Track/Venue Licence.

Medical Facilities at Race Circuits (See Section F)

9.1. Each permanent circuit shall have a Medical Committee consisting of:

9.1.1. A representative of the circuit management.

9.1.2. A fully registered medical practitioner appointed by the circuit.

9.1.3. A representative from the local First-Aid Organisation.

9.2. The Committee is responsible for organising a Medical Headquarters and supervising the supply and safekeeping of the medical equipment specified in these regulations.

9.2.1. The Committee must have a formal procedure to be followed in case of a major accident.

9.2.2. The names of Committee members, together with the name of the person responsible for the medical arrangements at the circuit, shall be notified to Motorsport UK, which has the overriding authority to approve Medical Centres and adjudicate on their compliance with the requirements of motor sport.

The Medical Centre

9.3. The Medical Centre should have easy and level access for ambulance and stretchers, offer security from press and public, and be located in accordance with CAA requirements to allow helicopters to be used when necessary.

9.4. The Centre should consist of a minimum of three rooms of sufficient size and with adequate heating and lighting:

9.4.1. A resuscitation room capable of taking at least two patients at the same time.

9.4.2. An observation ward capable of containing two recumbent patients with total security in the event of death.

9.4.3. A treatment area for small dressings and other minor procedures.

9.5. There should also be an administration area, shower, washing and toilet facilities, contained within the Medical Centre.

Notes on Dealing with Oil

10.1. Oil deposits on a track are generally caused in three ways:

10.1.1. From the fine spray caused by leakage on the pressure side of an oil system or from a badly fitting oil tank cap.

10.1.2. An accumulation of droppings from free flow oil systems used on motorcycle-type engines or from overflows.

10.1.3. As a mass of oil caused by the sudden emptying of a sump or tank. This is usually restricted to a relatively small area.

10.2. Where there is only a film of oil on the track surface, a fine dusting of a suitable absorbent material or neutraliser should be applied to the affected area.

Where there is oil on the track, this should be soaked up using a suitable absorbent material or neutraliser.

10.2.1. This can be spread upwind of the oil film, using a small shovelful.

10.2.2. The absorbent material should be scattered along the line of the oil, then brushed across the line.

10.2.3. Discolouration of the material will occur within a minute or two so that Officials can note the action taking place.

10.2.4. On no account should large amounts of material be used as this can clog the track surface when it hardens, and in addition can itself cause a minor dust storm.

10.2.5. Where there is a mass of oil on the track, this should be soaked up using sawdust or other suitable absorbent material.

10.2.6. This material must be carefully swept up and a quantity of fresh suitable absorbent material or neutraliser, then brushed into the area to kill the film left after removal of the material.

10.2.7. The suitable absorbent material or neutraliser used must be dry and reasonably new.

Requirements for Endurance, Night and Bad Weather Racing

10.3. Other general points relating to racing include:

10.3.1. Deleted.

10.3.2. Organisers are free not to record individual lap times in practice or during a race. If times are not recorded for practice, starting grid positions may be based on engine capacity (with larger capacity cars at the front) or by the methods described in Q.12.9.1.

10.3.3. There must be provision for crossing the track by bridge or tunnel to access pits and paddock as follows:

(i) For vehicles and pedestrians if any race is to run continually for more than six hours

(ii) For pedestrians if any race is to be run continually for more than an hour.

10.3.4. Accommodation for timekeepers must be adequately heated and ventilated and provide full visibility through windows. There must be adjacent lavatory facilities if any race is to run continually for more than half an hour.

10.3.5. All Senior Officials must have named Deputies who are able to take appropriate action in the absence of the Official concerned.

10.3.6. There must be proper liaison with local residents and authorities before any race extends over church hours or into darkness.

10.3.7. No snatch operations may take place during the hours of darkness unless the race is under the control of a Safety Car.

Marshals

11.1. Marshals must be relieved after six hours of continuous racing, following which they should operate in shifts of maximum six hours, with one shift on and one off.

11.1.1. Off-duty Marshals should be provided with at least one hot meal, kept dry, comfortable and, if appropriate, provided with warm rest accommodation with individual sleeping facilities for at least six hours out of their off duty period.

11.1.2. Transport must be provided for Marshals if they are required to walk more than 500m to reach rest and refreshment facilities.

Lighting at Night

12.1. Where Racing takes place at night, an area of track including the start and finish line, appropriate to the speed of competing cars at that point, must be lit sufficiently to enable the positive identification of each competing car.

12.1.1. For safety there must be a build up to and run down from the area of maximum intensity of lighting, which should be at a level at least equal to that of the headlamps of competing cars.

12.1.2. All lighting installations and other equipment must:

(a) not distract the competitor in any way, in particular by reason of shadow or dazzle.

(b) be set out in accordance with proposals agreed in writing by Motorsport UK and which were submitted to Motorsport UK at least 30 days prior to the date of the Event.

(c) be available in full working order for inspection by Motorsport UK prior to the Event, allowing adequate time for adjustments to be made if necessary.

12.2. More generally:

12.2.1. The pit area shall be lit sufficiently to enable control and replenishment to proceed.

12.2.2. The paddock area, spectator walkways, car parks, offices etc, shall all to be lit to ensure safety.

12.2.3. The track itself shall be identified by reflectors placed at both track edges at intervals of 5m from the 60m point before all corners until 60m past the end of the corner.

12.2.4. Corner warning boards shall carry reflecting markings.

12.2.5. All ambulances, break-down vehicles and Official cars shall be identified with a reflective strip at the rear and a blue or yellow flashing beacon.

12.2.6. All Flag Marshals shall have two yellow signal lights (one as standby) incorporating a control giving steady or interrupted lighting.

12.2.7. The Clerk of the Course shall have a red signal light.

12.2.8. Each Observer shall have two hand lamps, unless at a point with permanent lighting.

12.2.9. Scrutineers and Timekeepers shall have sufficient lighting to carry out their duties.

12.2.10. Competing cars shall have front and rear lighting, brake lights, and direction indicator lights in working order.

12.2.11. Reflective identification numbers must be displayed in three places: on the forward and each side of the car. The side numbers must be adequately illuminated and displayed on a flat vertical surface.

Practice

13.1. Should the event include a period at night, Q12.4 shall apply to each driver both in respect of the daylight period and also the night time period of practice. In addition to daylight practice at least one half hour of practice must be at night.

13.1.1. Deleted.

13.1.2. 'Night' is deemed to have occurred 30 minutes after the Official time as defined by the US Naval Observatory.

Bad Weather Racing

14.1. *Rain:* No specific requirement is specified with regard to track drainage, though when a track is resurfaced sufficient camber should be incorporated to provide for water to run off.

14.1.1. Any significant accumulation of water on the track surface will make the cancellation of racing probable.

14.2. *Fog:* When visibility is obscured between any two adjacent Flag Marshal Posts, racing or practice must be stopped, and abandoned if there is no reasonable prospect of conditions improving within two hours.

14.3. *Snow and Ice:* The following areas must be free of all snow and ice before racing can commence:

14.3.1. The race track, including verges, either up to the safety bank or for a width of 3m whichever is the lesser.

14.3.2. The paddock, the pits and communication roads.

14.4. Where course verges are cleared, any snow must not be piled into banks.

14.4.1. When a track is snow or icebound an inspection should be made 24 hours before the start of Official practice to decide whether or not the meeting will be cancelled or postponed.

14.4.2. If an adverse decision is taken, Motorsport UK, the Motorsport UK Steward and media must be notified.

Video Facilities

15.1. Following any incident involving injury, serious damage, judicial proceedings, and when otherwise appropriate, the Owner and/or Operator of a Venue having video facilities shall:

(i) Retain any video recording relating to the incident for at least 61 days after the incident.

(ii) Upon a written request by Motorsport UK provide to Motorsport UK the original of the video recording requested.

(iii) Keep the copy of the video recording requested by Motorsport UK until notified in writing by Motorsport UK that the keeping of the copy is no longer required.

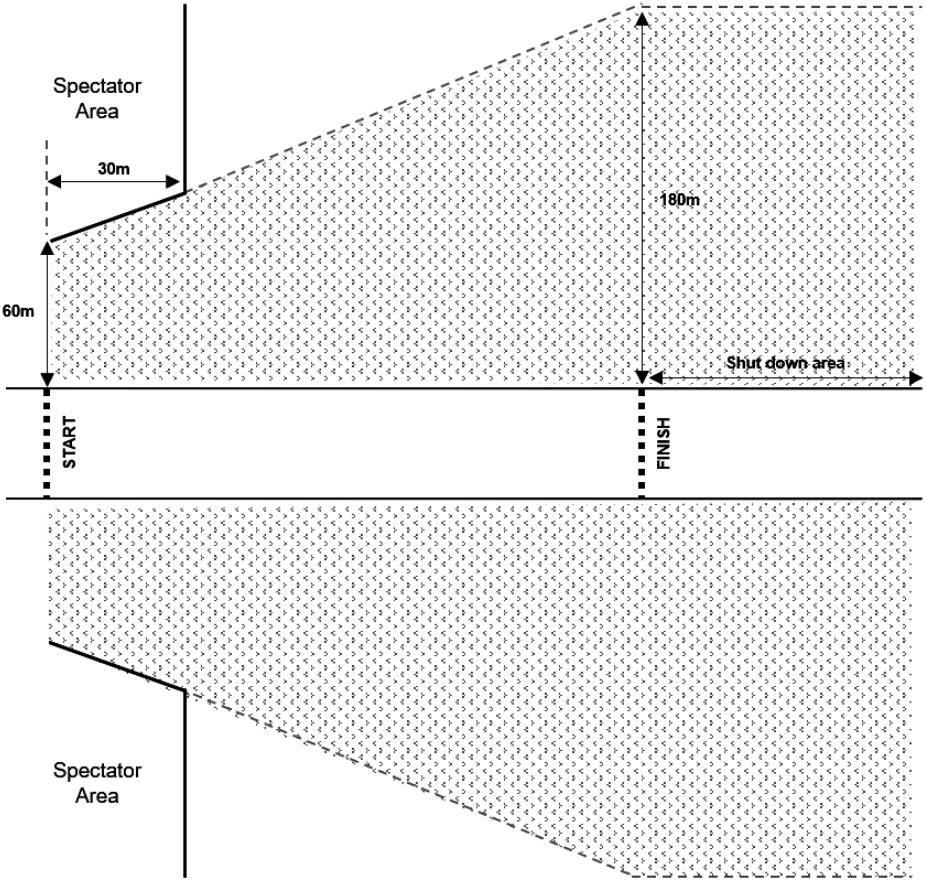

(F) Emergency and Medical Services (Units and Equipment)

General

1.1. All emergency vehicles are licensed based on their suitability for the particular tasks required of them and the equipment carried being as detailed in the appropriate section of the tables on pages 101 to 103. All units and equipment are at all times to be of appropriate specification and kept serviceable, clean, tidy and in a hygienic condition. Where appropriate and as required by the manufacturer, test certificates and consumables are to be 'in date'. When required, tests must be undertaken either by the manufacturer or a manufacturer approved agent. Good quality copies of current certificates must be carried on board the vehicle.

1.1.1. These vehicles, when licensed, are only acceptable at Events when crewed by appropriately licensed crew members in accordance with the requirements detailed in these regulations.

1.2. Rescue, Stage Safety and Rally Recovery Units are licensed yearly by Motorsport UK. All Motorsport UK registered Units must be inspected by an appropriate Motorsport UK Rescue or Recovery Assessor, or Motorsport UK Rescue & Recovery Panel member, on application for their first Motorsport UK registration and at least once in every three year period thereafter.

1.3. Organisers using Emergency Vehicles should satisfy themselves that they operate with Licensed Vehicles and crews that are correct for the type and status of their events.

Rescue Units

2.1. All Licensed Rescue Units are required to carry the appropriate equipment listed in the tables on pages 101 to 103.

2.1.1. Where possible or practicable, the recommended positioning of Emergency Vehicles will be indicated on the Track/Venue Licence or in the Event Regulations.

2.1.2. Deleted.

Purpose

2.2. Rescue Units are required to transport licensed crew and equipment and provide medical and extrication facilities at the scene of an accident within approximately 90 seconds of leaving the stand-by location when operating at a licensed venue (and as appropriate at other venues).

2.2.1. Additional licensed vehicles can be specified on the Track Licence if deemed necessary.

Type of Vehicle

2.3. The vehicle should be of a type that is safe and appropriate to drive on the competition course being used for the event whilst competition is in progress.

2.3.1. A suitable vehicle capable of carrying crew and equipment in safety at speeds appropriate for the surface of the competition course.

2.3.2. For non-sealed surface courses the ability for the vehicle to maintain traction over such terrain is required.

Identification

2.4. Vehicles should be clearly marked "RESCUE" and "AMBULANCE" as required and carry blue flashing beacons.

Crew

2.5. The Minimum crew requirements are:

2.5.1. Race and Rallycross events. Three fully licensed rescue crew members and a Doctor or Motorsport UK Registered Paramedic.

2.5.2. Rally and Speed Events only. Two fully licensed rescue crew members and a Doctor or Motorsport UK Registered Paramedic.

2.5.3. The Doctor or Motorsport UK Registered Paramedic may attend independently.

2.5.4. At no time, at any event, may the crew of a Licensed Rescue Unit include more than two trainees.

Stage Safety Unit

Purpose

3.1. Stage Safety Units transport licensed crew and equipment to an incident to render the scene safe and to render First Aid and spinal immobilisation until the Rescue Unit arrives, if required.

Type of Vehicle

3.2. The vehicle should be a car, an estate car or a car derived van with suitable tyres and underbody protection.

Identification

3.3. The vehicle should be clearly marked "STAGE SAFETY UNIT".

Crew

3.4. The crew will consist of a minimum of two fully licensed crew members, one of whom may be replaced by a Doctor or Motorsport UK Registered Paramedic (i.e. two crew or one crew plus Doctor/Paramedic).

An additional person may be carried but if that person is a trainee rescue licence holder they may use no more than two SSU duty signatures for the purpose of upgrading their licence.

Note: Throughout these sections an asterisk(*) indicates a requirement for additional information to be printed in the Supplementary Regulations (SRs). Text shown in Italics indicate a Regulation which may be amended in the SRs. Text shown in red indicates a new or amended regulation for 2022.

Rally Recovery Unit

Purpose

3.5. These units provide for the recovery of vehicles.

Types of vehicle

3.6. For light recovery, a four wheel drive vehicle is recommended with a two tonne winch.

3.6.1. For heavy recovery, a four wheel drive equipped with a two tonne or higher capacity winch, that has the capability by vehicle mounted or towed equipment to execute the suspended towing of a vehicle. Or a rear wheel drive vehicle, equipped with dual rear wheels and a rear mounted spectacle lift and a two tonne or higher capacity winch. It is strongly recommended that such vehicles are equipped with a limited slip or locking rear differential.

Identification

3.7. The vehicle should be clearly marked "RECOVERY" and carry yellow flashing beacons.

Crew

3.8. The crew must consist of a minimum of two licensed operators, at least one of whom must hold a full licence.

Actions at an Incident

4.1. Where Rescue Units or Stage Safety Units are involved, once the risk of fire has been covered, medical control will be established by the Doctor or Motorsport UK Registered Paramedic who will co-ordinate the extrication of any casualties without causing further harm or injury.

4.1.1. Crew should be fully familiar with, know the location of and be capable of assembling, operating, servicing and maintaining all equipment carried. Rescue crew to be able to assist the Doctor or Paramedic in the preparation and use of medical equipment.

4.1.2. Rally Recovery units and crew should be prepared to support the Rescue and/or Stage Safety Unit at an incident.

Crew Requirements

5.1. Licence applicant, upgrading and maintenance criteria are detailed in Table 5.

Training

5.2. All Emergency Vehicle Crew members should attend at least two training sessions a year, at least one of which must be facilitated by an appropriate Motorsport UK registered Rescue or Recovery Trainer, as well as several Motorsport UK-permitted events to maintain their efficiency and status.

5.2.1. Licensed Crew Members will not be automatically re-licensed on the basis of attending assessment days only.

5.2.2. Training sessions provided by an appropriate Motorsport UK registered Rescue or Recovery Trainer may be used as licence signatures. Regional Rescue or Recovery Trainers can be contacted via Motorsport UK.

Documentation and Information

5.3. Application Forms for Trainee and Full Licences, together with signature record cards, can be obtained from Motorsport UK. Details of Approved Training and Licence Assessment will be notified to licence holders.

Medical

Race Medical Centre

6.1. The circuit Medical Committee should ensure that the Medical Centre is properly equipped and maintained.

6.1.1. It is essential that proper patient records are kept and that procedures for the safe disposal of potentially hazardous waste material, including dressings, contaminated clothing, syringes, needles and sharps, are in place.

6.1.2. The risk of cross-infection must be addressed (e.g. by wearing gloves, aprons and goggles). Disposable equipment should be used where possible and sterility ensured at all times.

6.2. Records must be kept of the use of all drugs and fluids (including quantities and expiry dates) and equipment maintained according to appropriate service schedules.

6.3. The following list of equipment, fluids, drugs, dressings etc. is considered to be the minimum requirement for a Medical centre. However it is essential that individual doctors equip themselves with the drugs and equipment they judge necessary. All equipment must be checked, serviced and stored according to the manufacturer's recommendations. There should be sufficient equipment and drugs for the immediate resuscitation of a minimum of two patients.

Equipment and Drugs

6.3.1. Resuscitation

- Oropharyngeal airways (eight assorted sizes 2, 3 and 4)
- Pocket mask or similar device with non re-breathing valve and O2 inlet
- Suction apparatus mains, battery, hand or foot operated capable of 300mm Hg suction with reservoir not less than 350ml or overflow system with catheters and wide bore suction
- Self-inflating manual resuscitator with facemask and O2 reservoir
- O2 supply (min size F1360 litres) and spare with reducing valves, flowmeters as necessary
- O2 tubing and masks
- Laryngoscopes x 2 with spare batteries and bulbs
- Endotracheal tubes cuffed x 6 (sizes 6.0mm to 9.0mm)
- Nasopharyngeal tubes x 3 (assorted sizes)
- Entonox with appropriate on demand delivery system (NB storage regulations)
- IV cannulae (six assorted sizes 1.0 to 2.0mm)
- IV administration sets x 6
- Hartmanns Solution (or equivalent) (1000ml x 6): under the direction of a Medical Officer
- Haemaccel or equivalent (500ml x 8): under the direction of a Medical Officer
- Pressure infusor
- Assorted syringes and needles.

6.3.2. Monitoring and diagnostic

- Sphygmomanometer aneroid/mercury (for latter consider regulations re Hg spillage)
- Non-invasive Blood Pressure Monitor
- Pulse oximeter
- Defibrillator with leads, electrodes pads/gel
- ECG
- Thermometer
- Blood glucose estimation kit.

6.3.3. Splints and Dressings

- Large field dressings x 10
- Bandages and adhesive tape in assorted sizes
- Sterile non-adhesive and adhesive wound dressings
- Burn dressings and supply of sterile transparent bags assorted sizes
- Semi rigid cervical collars (assorted x 4)
- Splints.

6.3.4. Drugs: it is mandatory that the following be available as a minimum requirement.

- Cardiac arrest emergency drugs, according to the current UK Resuscitation Council Guidance
- A supply of parenteral analgesics.

6.3.5. Surgical

- Chest drainage kit
- Cricothyrotomy/Cricothyroidatomy kit
- Minor op sterile pack with needle holder, scissors, artery forceps, scalpel and blades
- Suture materials
- Skin Antiseptic
- Small autoclave (recommended).

6.3.6. Miscellaneous

- Scoop stretcher
- Casualty immobilser (vacuum mattress)
- Stretcher for ambulance.

Kart Circuit Medical Centre

6.4. This must comprise a room large enough to accommodate a single bed for the observation and treatment of a single casualty. As a minimum it must be equipped with first aid equipment as required under HSE Code of Practice ACOP 1997 for organisations of 21 to 50 people, including an eye wash station with 2 x 500ml of sterile saline solution, a set of stiff neck extraction collars, including paediatric sizes, and portable resuscitation equipment.

Medical Response Unit (Race Meetings)

6.4.1. A suitable saloon or estate car identified both sides with 'Medical Response Unit' and equipped with roof mounted flashing blue light(s) equipped as follows:

- Beacons, to be visible 360° (with low mounted units if appropriate)
- Spring centre punch or similar
- Oropharyngeal airways (2 x size 4, 1 x 3, 1 x size 2)
- Pocket mask or similar device with non-breathing valve and O2 inlet
- Portable suction apparatus (battery, manual of foot operated capable of 300 Hg vacuum) with a selection of catheters and wide bore suction
- Self inflating manual resuscitator with facemask with O2 reservoir
- Laryngoscope with spare battery and bulb
- Endotracheal tube cuffed (7.0mm x 1, 8.0mm x 1)
- Nasopharyngeal tubes (6.0mm and 7.0mm)
- A cylinder with oxygen with reducing valves and flowmeter (equivalent to size D in volume)
- O2 tubing and facemask
- Entonox with demand valve apparatus
- Hartmanns Solution (or equivalent) (500ml x 2)
- IV cannulae (1.4mm, 1.7mm and 2.0mm x 2)
- IV administration sets x 2
- Adhesive tape
- Needles and syringes assorted
- Disposable sharps container and plastic bag (for clinical waste)
- Rigid cervical collar, adjustable x 2
- Burns dressings x 3 (large, leg and arm size). Large field dressings x 5. Non absorbent wound dressings x 5
- Heavy duty scissors
- Chest drain kit
- Sphygmomanometer aneroid
- Stethoscope
- Surgical gloves.

6.4.2. Drugs are not listed, however it is essential that resuscitation drugs conforming to Resuscitation Council Guidelines and a supply of parenteral analgesics be available. Any further drugs and equipment that may be deemed appropriate by way of a specialist expertise is the responsibility of the individual doctor.

- All equipment must be regularly checked, serviced as necessary and stored according to the manufacturer's recommendations.

6.4.3. Minimum Crew Requirements: One Doctor or Motorsport UK Registered Paramedic, plus either, one paramedic, or one fully licensed Resue Crew member, or a second Doctor.

Basic first aid kit – Rally Doctors

6.5. The following items are recommended to be carried by Rally Doctors in an appropriately assembled portable kit:

6.5.1. As listed in 6.4.1 excluding chest drain kit and the following additional items:

- Sterile eyewash 2 sachets
- Protective goggles
- Survival blanket x 2
- Woollen blanket x 2
- In addition a flashing green beacon, identifying tabard, appropriate protective clothing, incident report forms (x10) and a powerful torch are considered necessary.

6.5.2. A comprehensive list of drugs is not listed, however the individual Doctor is expected to carry those drugs that they feel are necessary and a supply of analgesic drugs for parenteral and oral administration.

6.5.3. Any further drugs and equipment that may be deemed to be appropriate by way of specialist expertise are the responsibility of the individual Doctor.

6.5.4. It is recommended that any doctor regularly involved in Rally medicine should seriously consider acquiring a Motorsport UK frequency radio set.

Duties of the Chief Medical Officer

7.1. Chief Medical Officers at all events will:

7.1.1. Deploy their team, in conjunction with the Chief Incident Officer/Safety Officer and the Clerk of the Course, to ensure adequate cover for the event and that the medical centre, if present, has medical cover.

7.1.2. Allocate duties to each member of the team, appropriate to their skills and qualifications. Ensure each team member is familiar with the venue, facilities, equipment, the means of summoning assistance and casualty evacuation and removal.

7.1.3. Ensure each team member introduces themselves to the personnel they are stationed with, confirms and checks the means of communication and with event control.

7.1.4. Identify with the Clerk of the Course and Chief incident/Safety Officer the locations for Medical Intervention/Rescue Unit and ambulances vehicles at the venue unless such is detailed on the relevant Motorsport UK Track Licence.

7.1.5. Deleted.

7.1.6. Ensure that all medical vehicles and the Medical Centre (if applicable) are equipped to the Motorsport UK minimum specified level.

7.1.7. Ensure that medical staff have reliable communication with event control and the public telephone service, either by radio, mobile phone or a nearby landline. Ascertain the telephone numbers for the designated hospitals and if possible the relevant NHS Ambulance Control.

7.1.8. Ensure that drivers of emergency vehicles are aware of the need to preserve free access for their vehicles to the track and that they know the evacuation routes for the venue and the route(s) to the designated hospital(s). Ensure that all emergency vehicle drivers are aware that they must not enter the track without explicit permission from Race or Rally Control. They should proceed only in the direction in which the event is being run, unless explicitly otherwise instructed.

7.1.9. Deleted.

7.1.10. Assure themselves in conjunction with the Clerk of the Course that any personnel located on evacuation routes are briefed as to their role in assisting casualty evacuation.

7.1.11. Deleted.

7.1.12. Deleted.

7.1.13. Report to the Clerk of the Course, via event control, when they are satisfied that the medical facilities are appropriate for the event, raising any regulatory detail with the Clerk of Course and Motorsport UK Steward.

7.2.1. If a competitor is injured in an accident or presents with other medical conditions, such that it is considered inappropriate for them to continue to compete, then, the Chief Medical Officer, will request the Clerk of the Course to withdraw the competitor's licence upon medical grounds. The Chief Medical Officer should pass a report to Motorsport UK (via the Motorsport UK Steward) detailing the nature of the injuries/medical condition. Motorsport UK will hold such a suspended licence until the holder is medically cleared.

7.2.2. Medical examinations leading to the issue of a Motorsport UK medical certificate are not permitted at an event (H10).

7.2.3. The appropriate local hospitals must be notified by the event organisers of venue, date and times of the meeting.

7.2.4. Ambulance vehicles should be large enough to permit medical attendants to work without restriction.

7.2.5. The Chief Medical Officer shall assist the Motorsport UK Steward in the completion of the Motorsport UK Medical Statistics Form in order that Motorsport UK is able to collect data as part of the Motorsport UK risk Management Programme.

Eligible Paramedics

7.3. Eligible Paramedics, may be used as detailed in the Specific Regulations.

7.3.1. Any Paramedic registered with the Health and Care Professions Council (HCPC) attending a motor sport meeting as a result of a commercial contract between the meeting Organisers and their employers, will be considered as being a Motorsport UK Registered Paramedic for the duration of that specific meeting.

7.3.2. To be Motorsport UK registered, applicants must be currently certified by the Health Profession's Council (HPC) as being a paramedic and be in possession of adequate valid malpractice insurance.

7.3.3. Anyone who ceases to be certified as a paramedic with the HPC will be removed from the register.

7.4. All registered Paramedics must carry a malpractice insurance.

7.4.1. They must 'sign-on' and where appropriate (7.3.2) produce their Motorsport UK Paramedic Registration card at any event at which they are officiating.

7.4.2. They shall remain under the control of the Clerk of the Course at all times.

7.5. A Motorsport UK accident form must be completed for each and every incident treated.

Table 5 – Crew Requirements – Systems of acceptance and upgrading

Discipline	Acceptance for Training	Trainee Period & Requirements	Licence Acceptance	Maintenance of Licence
2.1 - 2.5.4 Rescue	Race/Trackside/Stage Rally experience Attend one approved Marshal training day including fire training and radio procedure training Possession of a valid First Aid Certificate is recommended Gain endorsement of Crew Chief on existing Rescue Unit Minimum age 18	Hold a Trainee Licence, complete modular training programme detailed on the training record card, with signatures Collect 10 signatures from an Instructor or Crew Chief for attendance at: 8 Race, Rally or Speed Events with at least 3 from each of two of these disciplines 2 Training Days all 10 within 2 years	Attend Approved Motorsport UK Rescue Licence Assessment. Demonstrate to assessors full familiarity and competence in the operation of all equipment also identification and preparation of medical equipment	Attend and pass 3 yearly Assessments. Satisfy Motorsport UK registered assessor that training attendances as per 5.2 have been completed between assessments
3.5 - 3.8 Rally/Cross Country Recovery	Gain endorsement of Crew Chief on existing Recovery Unit Attend one approved Rally Training day including radio procedure and fire training within two years of application Minimum age 17	Hold a Trainee Licence Collect 6 signatures from Crew Chief or Rally Official and attend two approved recovery training days, all within 2 years	Attend Approved Motorsport UK Recovery Licence Assessment. Demonstrate to assessors full familiarity and competence in the operation of all equipment Minimum age 18	Attend and pass 3 yearly Assessments. Satisfy Motorsport UK registered assessor that training attendances as per 5.2 have been completed between assessments

Rescue, Stage Safety and Rally Recovery Units and Equipment

	Rescue	Stage Safety Unit	Rally Recovery
General			
Beacons (to be visible 360° with low mounted high-intensity units at the rear)	B	A	A
Radio Race 169.3375MHz FM Rally 81.575MHz FM Rally 81.5375MHz FM (the supply of equipment using alternative radio frequencies is the responsibility of the organising club)	*	*	*
Personal protective equipment for each crew member	*	*	*
Fire resistant blanket (1m x 1m minimum)	*	*	
1 x 6kg dry powder extinguisher	*	*	*
1 x 6 litre light water/AFFF fire extinguisher	*	*	*
2 survival blankets	*	*	*
1 Warning triangle	*	*	*
Vehicle powered lighting and torches	*	*	*
Suitable cutters for harness, straps, etc	*	*	*
Recommended: Steering wheel airbag protection cover	*		
1 gallon (5 litre) clean, fresh tap water	*	*	*
Environmental Spill Kit – Medium	*	*	*
Tools			
2 hacksaws (1 for Recovery) and supply of blades	*	*	*
1 small bow saw or suitable equivalent	*	*	*
1 pair tin snips	*		
1 1m crowbar	*	*	*
1 pair bolt croppers (minimum 18in)	*		*
1 pair mole grips	*	*	
1 general tool kit to include AF and metric spanners, sockets, allen keys, "Torx" and other drivers etc to aid access to vehicle.	*	*	*

	Rescue	Stage Safety Unit	Rally Recovery
1 glass breaker (eg, Spring Centre Punch)	*	*	
2 hammers, large and small	*	*	*
Selection of flat, Phillips and Pozidrive screwdrivers	*	*	
3 suitable ropes or strops (1500kg SWL)			*
1 spade			*
Cold chisels/Bolster chisels	*		*
Selection of coupling hardware			*
Equipment suitable for securing/stabilising and towing vehicles	*	*	*
1 opaque sheet suitable for covering vehicle	*	*	*
Powered Tools			
1 powered metal cutting saw with an adequate selection of blades	*		
1 cutting saw, oscillating (electric, air or hydraulic)	*		
1 pedal cutter 3cm minimum jaw opening	*		
1 large spreader (may be combined with large shear)	*		
1 large shear to cut A, B, C pillars (may be combined with large spreader)	*		
Powered hydraulic equipment	*		
Hydraulic ram and extensions	*		
1 trolley jack 1015kg or air jack system.	*	*	
1 trolley jack, minimum capacity 2000kg, or high lift jack, or air jack system.			*

Note: For all categories of unit there should be adequate compressed air supply (bottled or from compressor) and/or hydraulic power supply for powering the range of equipment carried on the vehicle. Where equipment power source is electrical battery an adequate supply of charged batteries to be available.

	Rescue	Stage Safety Unit	Rally Recovery
Medical			
1 Automated external defibrillator with monitoring capability	*		
1 Resuscitator with Oxygen Reservoir and Mask	*	*	
4 oropharyngeal airways to include nos. 2, 3, 4	*	*	
Note: it is strongly recommended that some device is carried which allows the operator to perform resuscitation whilst isolated from the casualty's oral secretions	*	*	
1 Pulse Oximeter	*		
1 laryngoscope plus spare batteries and bulb	*	*	
6 cuffed endotracheal tubes (2 x 7.0, 2 x 8.0, 2 x 9.0) with syringes to inflate	*	*	
1 portable suction machine (able to obtain 300mm Mercury vacuum)	*	*	
Full selection of suction catheters including Yankauers	*	*	
'i-gel' Supraglottic airways (in sizes 3, 4 & 5)	*		
1 portable entonox set (1 spare entonox cylinder)	*		
1 portable oxygen set (900 litres in not more than 3 cylinders). Regulator to be capable of delivering 15 litres/min	*	*	
Supply of non re-breathing masks	*	*	
2 sets of extrication collars or 2 adjustable extrication collars, including paediatric sizes	*	*	
2 Spinal Immobilisers (eg, KED, RED, TED)	*		
1 chest drain kit	*		
1 pair heavy duty scissors	*	*	
Scalpels, blades and artery forceps	*		
Cricothyreotomy/Cricothyroidatomy kit (or "mini trach")	*		
1 sphygmomanometer	*		
1 stethoscope	*	*	
4 intravenous giving sets	*	*	
12 intravenous cannulae (three each 14, 16, 18, 20) and suitable fixation	*	*	
4 x 500ml 0.9% Sodium Chloride or equivalent	*	*	
1 Combat Application Tourniquet (CAT)	*		
A comprehensive selection of dressings including large sizes (eg 20cm x 40cm) and bandages	*	*	
A supply of burn dressings (for example 'watergel' or 'burn shield'), cling film and unused clean plastic bags	*	*	*
A sterile solution for eye irrigation	*	*	*
Selection of splints	*	*	
Pelvic sling	*		
1 stretcher (ambulance cot type)	*		
1 scoop stretcher	*		
1 Long Board c/w head immobilisation system and straps	*		
Disposable surgical gloves	*	*	
Disposable sharps container and plastic bag for clinical waste	*	*	
Report cards	*	*	*
1 Vacuum Mattress	*		

BASIC FIRST AID KIT

First Aid Kit in compliance with requirements for less then 25 employees (small) as defined by BS58599 – 1:2011	*	*	*

(G) Officials

General

1. The same person at any event can undertake several of the duties detailed below provided they are qualified for each.

1.1. Stewards of the Meeting however must not undertake any other duties.

1.1.2. Officials (other than Stewards) may appoint assistants to whom any of their duties may be delegated.

1.1.3. As a general principle, all senior Officials should be at least 18 years of age.

1.2. At any event there must be:

- A Clerk of the Course
- A Scrutineer
- Stewards (2.2), and
- Timekeepers if appropriate.

1.2.1. The Stewards of the Meeting act in an honorary capacity but other Officials may be remunerated as specified in the Regulations.

1.2.2. The organising club is responsible for meeting all fees in respect of Officials nominated by Motorsport UK, who will invoice the club accordingly.

1.2.3. Motorsport UK may nominate one or more Stewards or Observers to any event.

1.2.4. All other Officials will be nominated by the Organisers to the requirements of Motorsport UK, who may require certain Officials to be licensed or otherwise registered.

1.3. No individual may compete in an event for which he is nominated as an official. This includes any person nominated as an official in the regulations or programme of an event even though the individual named does not in fact carry out his official duties.

1.4. Registered Clubs must allow Motorsport UK pass holders free and appropriate access to any Motorsport UK-sanctioned event.

1.4.1. All Motorsport UK pass holders will make themselves known to the Secretary of the Meeting to 'sign on'.

1.4.2. Apart from their appointment as an Official of the event, the holder will not have any Official duty nor have the authority to intervene in the running of the event.

1.4.3. The Motorsport UK Pass, which remains the property of Motorsport UK, will show the year of validity, carry the name and photograph of the holder and will not be transferable.

1.5. Motorsport UK Pass Holders are defined as current members of the Motor Sports Council, current Directors and Executive Staff of Motorsport UK.

Stewards

2.1. Subject only to the exceptions in U21. the Stewards of the Meeting act as the second judicial body at any event and are responsible for hearing and adjudicating upon any Appeal against a decision by the Clerk of the Course or other Official.

2.1.1. Stewards are also responsible for the forwarding to Motorsport UK of any fines or protest fees collected.

2.1.2. Stewards should be thoroughly experienced in motor sport and of those appointed by an Organising Club, at least one must be a person whose motor sporting activity is not confined to that club alone and who is not an Official of that club.

2.1.3. The Stewards must have no executive duties in connection with the organisation of a meeting and are responsible only to Motorsport UK.

2.1.4. In a meeting comprising several events there may be different Stewards for each event.

2.1.5. Where Motorsport UK appoints a Steward of the Meeting, that Steward (or the Senior Steward if more than one is appointed) will act as chairman of the Stewards of the Meeting.

2.1.6. At all times the Stewards of the meeting should act through the Clerk of the Course.

2.2. There must be three (and no more) Stewards at every meeting, one of whom should be Motorsport UK-appointed.

2.2.1. If three are not available, suitable people must be co-opted by the existing Steward(s).

2.2.2. In the absence of a Motorsport UK-appointed Steward, the senior Event Steward will assume his duties.

2.2.3. Exceptionally, at Clubman Road/Navigation Rallies and Clubman or Interclub, Trials or Cross Country events, there may be a minimum of one Steward, but always an odd number.

2.3. Copies of all regulations, notices, etc, must be provided by the organising club for the use of Stewards as far as possible in advance of the event.

2.3.1. The Stewards must satisfy themselves that the conditions of the Permit (and track licence if appropriate) are complied with and have the power to withdraw a Permit in the event of non-compliance.

2.3.2. Organisers should make available a private room for the Stewards' discussions and should arrange for a meeting of the Stewards prior to the start of an event so that any issues may be discussed.

2.3.3. Stewards must initiate investigations into any incident or breach of Regulations they observe or is reported to them.

2.3.4. Stewards can act from the moment that documentation or Scrutineering commences until the deadline for any appeals has expired or any Right of Review procedure has been completed by them.

2.3.5. Stewards may adjourn the hearing of any appeals if required.

2.3.6. In cases where a judicial hearing must take place after a Meeting, the Stewards may delegate their authority to the panel of Stewards at a subsequent Meeting or alternatively to a panel of Stewards assembled for this purpose and which shall be selected by the authority(ies) responsible for the selection of the original panel. Such delegation must be made in writing.

Note: Throughout these sections an asterisk(*) indicates a requirement for additional information to be printed in the Supplementary Regulations (SRs). Text shown in Italics indicate a Regulation which may be amended in the SRs. Text shown in red indicates a new or amended regulation for 2022.

2.4. Stewards have authority to enforce compliance with the Regulations and to adjudicate on any Appeal arising during the meeting. In particular they can:

2.4.1. Modify the Supplementary Regulations in exceptional circumstances (D.11).

2.4.2. Subject to 2.5 in the case of force majeure or for safety reasons, instruct the Clerk of the Course to postpone, abandon or stop an event or part of an event (except as provided for in (Q.12.15). Any such instruction must be formally recorded. Provided that an event is run in more than one heat or part, these powers may, if thought fit, be exercised in respect of one heat or part.

2.4.3. Deal with any matter referred to them by the Clerk of the Course under the powers of 5.3, and if the offence is considered sufficiently serious impose further penalties under C2.6.2 and/or C2.6.3.

2.4.4. Alter the composition of or consolidate heats.

2.4.5. Authorise a re-run in the case of dead-heats.

2.4.6. Accept a correction made by a Judge (10).

2.4.7. Inflict a Reprimand, Fine, Time or Position penalty, Disqualification or Suspension, but not Exclusion (C.2.6.2). Any such penalty and the points accruing must be recorded on the Competitor's licence record.

2.4.8. Decide that a penalty or other decision appealed against can be waived, varied or a fresh penalty imposed.

2.4.9. Amend the results of a competition (C.2.10).

2.4.10. Order the removal from the course and its precincts, or inflict a penalty, upon any Competitor or Driver who refuses to obey the order of a responsible Official.

2.4.11. Approve any request from the Clerk of the Course to modify the position of the starting or finishing line, or the course, to ensure the reasonable safety of Drivers or spectators, or to alter the programme if circumstances so require.

2.4.12. Order in writing on behalf of Motorsport UK the impounding or sealing of a vehicle or equipment for as long as may be necessary for technical examination following an accident, or upon suspicion of non-compliance with the Technical Regulations.

2.4.13. Sign the Upgrade Cards of short circuit Kart competitors, for meetings where the Clerk of the Course retains responsibility for judicial duties, as may be required for upgrading a competition licence. The following conditions will need to be met before a signature may be given on Kart Upgrade Cards:

(a) A competitor must perform satisfactorily, throughout the day, at competitive speeds, and must not receive any adverse reports regarding his driving. Competitors may not necessarily have completed the Final on the day

(b) Not more than one signature per meeting

(c) Kart Endurance events do no qualify for upgrading signatures

(d) Tyro Kart events do not qualify for upgrading signatures.

2.4.14. In cases of force majeure, authorise a suitable Official who does not hold the correct licence to take over the duties of an absent Official.

2.4.15. Sign the reverse of the Clerk of the Course Licence as may be required to certify requalification or for upgrading their Officials Licence. The conditions to be met are as detailed in 19.2.

2.5. The Stewards of a Meeting have another major function, to prevent unnecessary danger, and the Motorsport UK Steward has overriding authority in matters of safety save where Motorsport UK has appointed a Safety Delegate, in which case the Safety Delegate shall have overriding authority in matters of safety.

2.5.1. In this respect Stewards should always try and act as a body, unless there are overriding considerations of urgency.

2.5.2. Any Steward who is forced to take individual action should inform his fellow Stewards and the Clerk of the Course as soon as possible.

2.5.3. No Steward should commit any act or give any order except as required to execute his role.

2.6. As soon as possible after an event the Stewards, with assistance from the Clerk of the Course, must send a Stewards of Meeting Report (D.26.4) to Motorsport UK giving particulars of:

2.6.1. Accidents involving injury or damage to property.

2.6.2. Protests/appeals lodged and action taken.

2.6.3. Penalties imposed and any recommendations in such cases.

2.6.4. General comments on the organisation of the event and the exercise of their duties.

2.6.5. Any other relevant observations as to the conduct of the event.

2.6.6. Any notices of Intention to Appeal and appeal fees received in accordance with Section C of the Regulations.

Championship Stewards

2.7. Championship Stewards may only adjudicate on any disputes, irregularities or appeals arising from the approved Championship regulations.

2.7.1. Championship Stewards are also empowered to consider any request from the Championship co-ordinator to penalise any Competitor for any breach of Championship regulations after holding a formal hearing to impose a penalty in accordance with C.2.1.1 (subject to the rights of appeal provided for in Section C).

Championship Co-ordinators

2.8. Championship Co-ordinators are responsible for liaison with the Championship Stewards and between the Championship Organiser, the event Organisers and the Competitors, as well as for the distribution of all relevant information.

Secretary of the Meeting

3.1. The Secretary of the Meeting is responsible for the organisation of the Meeting in terms of all material and notices required.

3.1.1. This includes all paperwork prior to the event, acceptance of entries, allocation of numbers, Competitors' 'signing-on' sheets and Licence examinations, as well as the submission of items required under D.26.4 to Motorsport UK after the event.

3.1.2. The Secretary must be present throughout practice and the competition itself to assist in the correct running of the meeting and should maintain a list of novice Drivers (5.2).

3.1.3. Competitors who fail to produce the necessary documents to prove their eligibility for a meeting should be reported by the Secretary to the Stewards of the Meeting as detailed in 5.2. For Clubman and Interclub status Events (other than Race, Stage Rally or Kart*), a properly completed and signed licence application form (including a passport photograph) together with the appropriate fee can be accepted instead of a Competition Licence.

3.1.4. *Competitors 17 years of age and under who have just completed their ARKS test may also produce a completed application (including a passport photograph) and payment in lieu of a Competition Licence.

3.1.5. All applications accepted in lieu of a Competition Licence must be forwarded by the Secretary directly to the Motorsport UK Licences Department within 48 hours of receipt, confirming that they have been accepted at the event (H.26.1.2).

3.2. The Secretary shall:

3.2.1. Have available a current copy of the Motor Sports Yearbook (with amendments, if any)

3.2.2. Post on the Official notice board all bulletins, Permits, authorisations, penalty or other decisions, times and results.

3.2.3. Be responsible for sending to the Stewards prior to the meeting all appropriate documents, including a copy of the SRs

3.2.4. Be responsible for receiving any Protests or Appeals from Competitors, noting time of receipt, and as quickly as possible pass Protests to the Clerk of the Course and Appeals to the Stewards of the Meeting.

3.2.5. Protests or Appeals may also be received by the Assistant Secretary, the Clerk of the Course or his deputy. Protests received by the Assistant Secretary or Deputy Clerk of the Course must be passed to the Clerk of the Course as quickly as possible, and Appeals to the Stewards of the meeting.

3.2.6. Ensure that publicity for the event is arranged (after D.4.1 has been complied with) to ensure that the general public are aware of the meeting. If an event is cancelled the appropriate media services in addition to Motorsport UK and Motorsport UK Steward(s) must be advised.

3.2.7. All documents and programmes issued for an event must contain information as required by D.9, and all results, bulletins, official communications, etc should be marked with the date and time of issue.

3.2.8. The Secretary of the Meeting must liase with the Chief Timekeeper to confirm the proposed timetable for the meeting.

3.2.9. If the meeting is scheduled to last more than nine hours from signing on, prior notice must be given to Senior Officials, so that they can make appropriate arrangements for the relief of their teams.

The Event Director

4.1. The Event Director (Race Director, Rally Director etc) is the Official appointed at major international meetings by the organising committee (or Motorsport UK) who is responsible for the overall planning of the meeting, for maintaining the timetable (including non-sporting aspects) and for compliance with FIA and Motorsport UK prescriptions and protocol.

The Clerk of the Course

5.1. The Clerk of the Course has overall responsibility for the general conduct and control of an event in accordance with the Regulations, Programme and Organising Permit.

5.1.1. The Clerk's duties commence at the opening date for receiving entries, and conclude once the results have been finalised, any protest time has expired, all protests and appeals have been dealt with, and any post-event inspections of vehicles or components have been completed and reported on or any Right of Review procedure has been completed by the Clerk.

5.1.2. The Clerk of the Course must be present throughout practice and the Competition in order to carry out the specified duties.

5.1.3. Motorsport UK may require certain Clerks of the Course to be licensed Officials.

5.1.4. To be eligible to be named a permanent Clerk of the Course for a Race Championship, registered with Motorsport UK, the Clerk must be the holder of a current Clerk of the Course National licence, as a minimum.

Responsibilities

5.2. The responsibilities of the Clerk of the Course will be:

5.2.1. Ensure that all regulations are complied with and that all necessary equipment is available.

5.2.2. Keep order in conjunction with the Officials appointed with special responsibility for public security.

5.2.3. Ensure that all Officials are provided with the information necessary to carry out their duties.

5.2.4. Ensure the appropriate Officials are at their posts and report accordingly to the Stewards of the Meeting before any event commences.

5.2.5. Ensure that the conditions of any Permit and Track Licence have been fulfilled before the start of practice or competition, and report accordingly to the Stewards of the Meeting. Before doing so (and except in the case of Rallies and Classic Reliability Trials) the Clerk (or Deputy) must inspect the course and its installations. Any proposals to vary the manning or equipment levels must receive specific written approval from the Stewards of the Meeting before the event can commence.

5.2.6. Make arrangements with the Secretary to satisfy himself and the Stewards that all Drivers, co-Drivers and Entrants are in possession of the appropriate Competition Licences/Medical Certificates and Club Membership cards (3.1). Except as provided for in 3.1.3, any Competitor who cannot produce the necessary documents to prove eligibility at an event may not be allowed to start except with the agreement of the Stewards and on payment of a fee. In such cases the Clerk of the Course must ensure that the indemnities required by D.13.1 have been signed.

5.2.7. Arrange for all cars to be routed to the Scrutineering area or Parc Fermé (as appropriate).

5.2.8. Ensure that every accident or incident involving a competing vehicle is reported to the Stewards of the Meeting and the Chief Scrutineer, and that the Chief Medical Officer is informed if any Competitor is injured. The Competitor's Medical Certificate/Licence should be returned to Motorsport UK if the Chief Medical Officer considers it appropriate.

5.2.9. Ensure that any vehicle which is to give a performance demonstration or take part in a high speed parade has been examined and approved by the Chief Scrutineer, and that the Driver has 'signed-on'.

5.2.10. Ensure that every vehicle carries the proper identification marking in accordance with the programme.

5.2.11. Ensure that the correct Driver is in each vehicle and Marshal the vehicles as necessary.

5.2.12. Send the vehicles to the starting line in the right order, personally start all races or delegate this responsibility to a competent Official who will start all scratch races throughout the meeting, except in the case of force majeure.

5.2.13. Advise the Stewards of the Meeting any proposal to modify the programme.

5.2.14. Collect the reports of the Timekeepers, Scrutineers, Technical Commissioners, Pit Observers, Driving Standards Observers and Judges of Fact, together with any other Official information effecting the results.

5.2.15. Prepare or arrange for the Secretary of the Meeting to prepare a statement of the information necessary to enable the Stewards of the Meeting to complete their report (2.6).

5.2.16. Relieve from duty any Official or Marshal who the Medical Officer considers as possibly unfit by reason of health, consumption of alcohol or drugs.

5.2.17. Ensure that any driver of a Parade, Lead or Safety Car during a Race (n.b. not including the driver of any car controlling a formation lap), is a suitably experienced circuit driver who should have or had previously held a Competition Licence (Q.Appendix 5).

5.2.18. Deal with any Protests from Competitors.

5.2.19. (3.1, H.13). Sign competition licence Upgrade Cards (except in respect of short circuit Kart Races where the Clerk of the Course retains responsibility for judicial duties. As a guide, the following conditions will need to be met before a signature is given:

(a) A driver must perform satisfactorily at competitive speeds and must not receive any adverse reports regarding his driving

(b) In races up to 10 laps the driver must be classified as a finisher. In some cases, particularly where a race includes several classes of widely differing performances, a driver need not complete the full distance of the race

(c) In races over 10 laps the driver must complete at least 10 laps

(d) There must be at least 10 starters

(e) A high-speed trial will qualify as a race for the purposes of signing of Upgrade Cards

(f) Not more than two signatures (one per race) per driver may be given at any one car race or Long Circuit Kart meeting (H.13)

(g) If a Clerk of the Course refuses to sign a Upgrade Card, a driver concerned may Appeal to the Stewards as provided for in Section C.

(h) For Endurance Races where a driver has satisfactorily completed at least one hour of driving time, they may receive two signatures.

5.2.20. Notify the landowner and the Local Environmental Health Officer of any injury requiring overnight hospitalisation incurred during the meeting.

5.2.21. Stop a race in accordance with Q.12.15 (2.4).

5.2.22. Authorise the use of flashing yellow warning lights when these are controlled from Race Control (E.3.1.3 to 3.1.7).

5.2.23. Additional duties and responsibilities can be detailed in the Specific Regulations.

5.2.24. Ensure that adequate sanitation is provided and available for officials, competitors and spectators in accordance with local authority guidance.

Powers

5.3. Subject only to the exceptions in U21., the Clerk of the Course acts as the sport's first judicial body. The Clerk, or his Deputy except in very serious cases, has the power to impose penalties in accordance with C.2.1.1 (excluding Suspension and Exclusion), and the following:

5.3.1. Disqualify from the results of practice or competition, or prohibit from competing, any Competitor or Vehicle that has been reported unsafe or ineligible.

5.3.2. Penalise any Driver reported for not complying with flag signals.

5.3.3. Penalise any Competitor reported for being in contravention of the General Regulations or SRs.

5.3.4. Disqualifications can be enforced either by displaying a Black Flag during a race, or after interview at the end of the competition or practice.

5.3.5. Penalise a Competitor found guilty of breaching C.1.1.5. This does not preclude the Competitor also being reported to the Stewards of the Meeting for further penalties under C.2.6.3.

5.3.6. Penalise any Competitor found guilty of abusive language or behaviour or physical assault or threat of physical assault. This does not preclude the Competitor also being reported to the Stewards of the Meeting for further penalties.

5.3.7. Impose a time, place or lap penalty in accordance with C.2.3. This regulation does not preclude such a Competitor being reported to the Stewards for alternative penalties.

5.3.8. Impose a fine as detailed in Part 3, Appendix 1 on any Competitor who fails to attend, or who reports late at, a scheduled Drivers' briefing, or on any Driver who has not raced at the circuit before and who fails to report for a pre-practice briefing.

5.3.9. All driving penalties applied must be recorded on the Driver's Competition Licence Record

5.3.10. All disqualifications, penalties or fines must be reported by the Clerk of the Course personally to the Stewards of the Meeting. Fines must be handed to the Stewards for onward transmission to Motorsport UK.

Timekeepers and Handicappers

6.1. Timekeepers and Handicappers are appointed and licensed annually by Motorsport UK from people holding the relevant annual Motorsport UK appointments (except for Interclub or Clubman non-speed competitions when this requirement only applies if specifically imposed on the Motorsport UK Organising Permit).

6.1.1. All are subject to an annual performance review and their appointment can be revoked at any time.

6.1.2. They should have no connection with any particular trader or manufacturer who might benefit in any way from the result of any competition at which they officiate.

6.1.3. Timekeepers can only officiate in accordance with their appointed grade and using the appropriate certified equipment and procedures relevant to a particular event.

6.1.4. The Chief Timekeeper is responsible for the appointment, and conditions of appointment, of staff.

6.1.5. The organising club must provide all necessary information and is responsible for meeting all approved costs of the Officials and for providing adequate facilities for them to carry out their duties.

6.1.6. The Chief Timekeeper may employ other suitably experienced assistants.

6.1.7. The minimum Permitted grade of Timekeeper in charge at any event is given in the accompanying table (Table No. 6).

Duties of Timekeepers

6.2. The principal duties of Timekeepers are to:

6.2.1. Report personally to the Chief Timekeeper at the start of an event

6.2.2. Use appropriate certified equipment for the type and grade of event and for the authenticity of the results produced.

6.2.3. Register appropriate times for the competition, and any other times required by the Clerk of the Course, sign the timing reports and pass them to the Chief Timekeeper.

6.2.4. Send their original time sheets to the Clerk of the Course, the Stewards of the Meeting or Motorsport UK, if requested.

6.2.5. Communicate any times or results only to the Clerk of the Course, the Stewards of the Meeting or in accordance with their instructions.

6.2.6. Prepare and sign a report relating to timing and send it with all necessary supporting documents to the Clerk of the Course (or to Motorsport UK in the case of a record attempt).

6.2.7. Act as Judge of Fact in respect of timing matters at Race and Speed events. If there is no Chief Timekeeper at Kart Race meetings, the Chief Lap Scorer will be a Judge of Fact in respect of laps completed and finishing order.

6.3. At Speed events Timekeepers must NOT accept responsibility for ensuring the course is clear in order to permit the next Competitor to start.

6.3.1. The Clerk of the Course must appoint a Starter whose duty it shall be to notify the Timekeeper when the course is ready for the next Competitor (5).

Timing Requirements

6.4. Times recorded using manually-operated equipment should be rounded to the nearest 0.1 of a second.

6.4.1. The accuracy of automatically-operated equipment will be as classified.

6.4.2. Where times are not to be published, speeds should be given to the nearest mile per hour and no minimum standard of equipment applies.

6.4.3. When calculating average speeds, the result should be consistent with the accuracy of time and distance measured, and must be rounded down at all times.

6.5. *Standing Start Speed Events*:

6.5.1. For Hill Climbs and Sprints, timing is only permitted up to an accuracy of 0.1 or 0.01 seconds.

6.5.2. For vehicle-activated timing, the alignment for start time must relate to a specific part of the vehicle having moved forward 100mm from rest. The Permitted tolerance for this alignment is ±50mm or ±5mm for times rounded to 0.1 sec or 0.01 seconds respectively.

6.5.3. For Hill Climbs, Sprints and record attempts, the Chief Timekeeper will arrange for an appointed Timekeeper to be positioned at the start line to ensure that each vehicle is correctly aligned before being Permitted to start.

6.5.4. Where timing is actuated by a light beam, only cars fitted with a timing strut will have their times recorded (S.10.9).

6.5.5. For Speed Events (except Drag Races) the light beams must be set parallel to, and between 280mm and 430mm above the road surface. The light beam at the finish must be set at the same height as the start beam. Competitors must be positioned at the start so that the part of the car that will break the beam is 100mm behind it.

6.5.6. For Speed Events (except Drag Races) the Course Clear/Closed signal must be separated from any other signal.

6.5.6.1. For Drag Racing two separate performances are monitored for each run, the elapsed time and the speed. On an elapsed time run the car first leaves the starting line connecting the beam which activates the electronic timer. As the car continues through the course the timer records the elapsed seconds and fractions of seconds until the car breaks the finish line beam and stops the timer. Top speed is determined by the car breaking one additional light beam at the finish line.

Should the driver react to the timing system too quickly and drive away from the starting line before the green "go" signal then he will have had a foul start and be disqualified (red light start).

6.5.7. The Course Closed signal must be red and, if it is a light, must be fitted with at least two bulbs. The Course Clear signal must be green and be activated in accordance with 6.3.

Alignment Lights

6.5.8. Where alignment lights are used, they must be in a separate housing and can be of any colour except red or green. When course conditions require, a repeater of the Course Clear signal can also be incorporated in this housing.

Autocross and Rallycross Events

6.5.9. The start of timing should be synchronised with the starting signal, and not activated by a light beam.

Rallying Events

6.5.10. Where times are recorded to the nearest minute, a timepiece with an accuracy validated against GMT/BST Time is Permitted (R.2.7).

Timing Equipment

6.6. All timing equipment used at any Motorsport UK Permit event must have a licence plate attached, and proof of current certification must be available at all times (except for Interclub or Clubman non-Speed Event competitions when this requirement only applies if specifically detailed in the discipline Specific Regulations). Table 6.6 identifies which events require certified timing equipment.

6.6.1. For Stage Rallies, the Chief Timekeeper must provide the Motorsport UK Steward (or send to Motorsport UK within seven days) a standard report form listing the certificate numbers, serial numbers and names of the suppliers of the clocks being used.

6.6.2. Any Laser equipment must have Motorsport UK approval before use.

6.6.3. Adequate warnings must be displayed that a laser beam is being used, and precautions taken to prevent any person looking directly into the beam.

Handicappers

6.7. There shall be a Motorsport UK-licensed Handicapper in attendance throughout any event where results depend on a handicap.

6.7.1. After entries have closed, the Handicapper shall prepare the handicaps in accordance with the SRs, which should state if any handicap is to be varied following a performance made in a previous event at the same meeting.

6.7.2. In the case of a handicap race where the handicap is applied at the start, the starter must be a Timekeeper.

Scrutineers and Technical Commissioners

7.1. Technical Officials are appointed and licensed annually by Motorsport UK from people holding the relevant Motorsport UK appointments (except for Interclub or Clubman non-speed competitions where this requirement only applies if specifically imposed on the Motorsport UK Organising Permit).

7.1.1. All Special Stage Rallies must have a Motorsport UK-licensed Scrutineer.

7.1.2. The Chief Scrutineer is responsible for the appointment, and conditions of appointment of staff.

7.1.3. The organising club must provide all necessary information and is responsible for meeting all approved costs of the officials and for providing adequate facilities for them to carry out their duties.

7.1.4. The Chief Scrutineer can employ other suitably experienced assistants, but lay assistants cannot give final approval for the participation of any vehicle.

7.1.5. Scrutineers are responsible for checking the mechanical state of vehicles both in regard to compliance with all Regulations and in the interests of safety (H.32).

7.1.6. There must be a Chief Scrutineer present at all events and not less than one Scrutineer for every 45 vehicles entered for the event.

7.1.7. All Scrutineers must report to the Chief Scrutineer at the start of a meeting.

7.1.8. The Chief Scrutineer can be nominated by Motorsport UK, who may also appoint other Officials for specific duties in connection with vehicle eligibility. In other instances the organising club is responsible for appointing these Officials.

7.2. The time allowed for scrutiny shall be such that no more than 10 vehicles per hour are required to be examined per Scrutineer.

7.2.1. Scrutineers will signify acceptance of a vehicle by issuing a label showing details of the event.

7.2.2. For Motorsport UK Scrutineers the label must bear the Motorsport UK logo.

7.2.3. The label must be attached to the vehicle for the duration of the event (H.32).

7.2.4. When a Scrutineer rejects a vehicle, details must be put in writing with a copy, timed and signed by the Competitor, retained by the Scrutineer.

7.2.5. Deleted.

7.2.6. At all events the Chief Scrutineer must supply a written report to the Clerk of the Course covering all vehicles examined, giving reasons for any rejections.

7.2.7. Motorsport UK-appointed Scrutineers and Technical Commissioners must report any findings to the Chief Scrutineer and Clerk of the Course, with a copy direct to Motorsport UK.

7.3. In particular, Scrutineers shall:

7.3.1. Make inspections at any time at the request of the Organisers, Motorsport UK, the Clerk of the Course, Chief Scrutineer or Technical Commissioner.

7.3.2. Use only such measuring instruments as may be specified by Motorsport UK.

7.3.3. Communicate Official information only to the Clerk of the Course, the Stewards of the Meeting or Motorsport UK.

7.3.4. Prepare and sign the reports of their inspections and pass them to the Clerk of the Course and Motorsport UK, as appropriate.

7.3.5. Attend two out of three annual Seminars to maintain their appointment (28).

7.4. The Chief Scrutineer (and any Deputy) shall remain on duty throughout an event.

7.4.1. Every Scrutineer responsible for approving a vehicle shall remain on duty until that vehicle has completed the competition (including any post-competition scrutineering periods), or until released by the Chief Scrutineer.

7.4.2. The SRs for meetings or International events being run to Appendix J of the FIA's International Sporting Code will require the Entrant to make available at all times a copy of the Homologation Papers appropriate to the type of vehicle participating.

Scrutineers Groups

7.5. Chief Scrutineers can instruct Trainee Scrutineers to assist as part of their on-the-job training. Scrutineers can sign for cars in their own right, and can assist more senior grades at any meeting.

7.5.1. Deleted.

7.5.2. National Scrutineers can take charge of scrutineering at events up to National status.

7.5.3. International Scrutineers can take charge of scrutineering at any type of event up to International status, including FIA Championship events.

Technical Commissioners

7.6. Technical Commissioners are empowered to check the eligibility of vehicles for compliance with any Technical Regulations and to undertake any measurements or examinations required.

Eligibility Scrutineers

7.7. Eligibility Scrutineers, whose names should be published, can be appointed for certain Formulae for which Technical Commissioners have not been specified.

7.7.1. Eligibility Scrutineers must be licensed Scrutineers and must always work in conjunction with the Chief Scrutineer or Technical Commissioner with regard to Judgements of Fact.

7.7.2. If required to undertake measurements that require stripping of a vehicle, they must be licensed to do so. Measurements which can be performed without stripping may be undertaken by a licensed Scrutineer.

7.7.3. Eligibility Scrutineers appointed to International Rallies can carry out, or request to be carried out, any stripping and dismantling that may be needed.

7.7.4. Codes of Practice are provided for both Technical Commissioners and Eligibility Scrutineers. Technical Commissioners and licensed Eligibility Scrutineers are considered members of the Technical Commission.

Environmental Scrutineers

7.8. Environmental Scrutineers are appointed by Organisers (and occasionally Motorsport UK) for all Rallies involving cars built after 1941 and for other events using the public highway. At all other events the Organiser and Chief Scrutineer may appoint an Environmental Scrutineer.

7.8.1. Environmental Scrutineers' main function is to use sound meters or other means to check sound levels of all cars (including Course Cars) at Scrutineering and during the event, and report excessive levels.

7.8.2. The duties of an Environmental Scrutineer may be combined with that of a Driving Standards Observer as detailed in G.11.

7.8.3. To assist Owners and Organisers Motorsport UK has set up an Auditing Inspectorate of Environmental Inspectors who are licensed to attend events and carry out measurements in conformity with J.5.18.

7.9. All Environmental Scrutineers have the authority to refuse a start or withhold Time Cards or route information where Competitors are considered to have made excessive noise.

7.9.1. Environmental Scrutineers may also bar Course Cars from an event.

7.9.2. Before the start of a Rally, a Sound Test must be conducted in accordance with J.5.18, using either the 0.5m or 2.0m test, as decided by the Environmental Scrutineer.

7.9.3. Road Rallies should use the 2.0m test wherever possible.

7.9.4. Organisers should liaise with the landowners as appropriate.

7.9.5. No protest or appeal can be made against the decision of an Environmental Scrutineer.

7.9.6. The name of the Environmental Scrutineer should either be given in the Final Instructions or posted on an Official notice board at signing-on before the start of Scrutineering.

7.9.7. Environmental Scrutineers must provide a full written report, to the Clerk of the Course as soon as possible before publication of provisional results.

7.9.8. Details of any penalty applied by the Environmental Scrutineer must be included in the published results.

7.9.9. The SRs or the Final Instructions for the event should carry a reminder that a sound test will be carried out.

Motorsport UK

OPEN
Monday – Friday
9.00–17.00

Tel: 01753 765000

Membership Team:
Tel: 01753 765050

Website:
www.motorsportuk.org

7.10. The minimum requirements for Sound Meter Standards are as follows:

- Type 1 or 2 Instrument (to be calibrated regularly)
- International Standard IEC 651
- British Standard BS 5969
- Range 70–120 dB(A)
- Weighting 'A'
- Time Constants Fast/Slow
- Maximum 'Hold' recommended
- Calibrators to comply with BSEN or IEC 60942 Class 2.

Pit Observers

8.1. The Pit Observers and Marshals must:

8.1.1. Report to the Chief Pit Marshal at the start of the meeting and act on his orders.

8.1.2. Report immediately to the Chief Pit Marshal any infringement of the Regulations by a Competitor.

8.1.3. Submit their reports at the end of the event to the Chief Pit Marshal.

Race Observers and Flag Marshals

9.1. Observers are the eyes and ears of the Clerk of the Course and occupy Posts along the course allocated to them by the Chief Observer.

9.1.1. Observers are responsible for the efficient operation of their Post team, but should not personally become involved in dealing with incidents.

9.1.2. Upon taking up their Post, Observers should report to the Clerk of the Course on its levels of equipment and manning.

9.1.3. Observers must pass on to the Post team any instructions received from the Chief Observer and ensure that all watches are synchronised with Official Timekeeper's.

9.1.4. Observers should immediately report to the Clerk of the Course by telephone or radio all incidents that occur on their section of track, including the time of occurrence.

9.1.5. Observers are responsible for advising the Clerk of the Course as to whether a race should be stopped.

9.1.6. Any vehicle stopping in their sector should only be moved if the Observer (or their Deputy) is satisfied this can be done without unreasonable risk to Marshals. If not, the Observer should immediately report to the Clerk of the Course that the vehicle cannot be moved.

9.1.7. At the end of each competition or practice (or as required) all Observers must give the Clerk of the Course a written report covering all incidents or accidents in their sector.

9.1.8. The Observers' Report should include the time the incident occurred, the identities of all people and vehicles involved, and full details of the incident.

9.1.9. Race Observers are also responsible for the use of flashing yellow warning lights when the control of these lights is from their Post (E.3.1.3).

9.2. Flag Marshals are appointed to give flag signals to Competitors and may also act as Observers.

Judges of Fact

10.1. Judges (of Fact) may be appointed by an organising club, Motorsport UK or (with Motorsport UK approval) a Regional Association to adjudicate on any factual occurrence or question of eligibility at an event.

10.1.1. No protest or appeal can be made against a Judge in relation to any statement of fact, which must be accepted as a fact unless later corrected by him (with the approval of the Stewards of the Meeting), with the exception of reports from Eligibility Judges of Fact (other than short circuit karting) which may be appealed under C.6.1.3 and/or C.7.2.

10.1.2. A Judge's decision must not constitute a statement of results, and Judges are not empowered to impose penalties, as they will not necessarily have taken into account any prevailing conditions.

10.1.3. Except for events where any part takes place on the public highway, Judges must report to the Clerk of the Course for any necessary action to be taken. (See 7.9.2 and 7.9.3 for procedures on Rallies and other events.)

10.2. The SRs for an event will specify the facts to be judged and the specific Officials who will judge them. The names, both first and last, of the officials appointed as Judges must be listed in the Programme or an Official Bulletin or posted on the Official Notice Board with date and time of publication.

In particular:

10.2.1. The Chief Scrutineer of an event and members of the Technical Commission are considered Judges in respect of Vehicle Eligibility (C.3).

10.2.2. Environmental Scrutineers and Officials in charge of Sound Meters are considered Judges in respect of Sound.

10.3. The use of cameras or similar equipment to facilitate a Judge's decision is allowed, but only if the equipment is under the control of the Organisers.

10.3.1. In such cases the Judge can delay a decision until the evidence is obtained.

Driving Standards Observers

Non-Race Observers

11.1. Driving Standards Observers can be appointed by Organisers, Motorsport UK or (with Motorsport UK approval) a Regional Association for all events wholly or partly held on the Public Highway.

11.1.1. Their function is to monitor driving standards, including noise and speed levels, and report driving likely to bring the sport into disrepute.

11.1.2. Driving Standards Observers are empowered to inform Competitors that they will be penalised in accordance with the Regulations, which can include withdrawal from the event.

11.1.3. No protests or appeals can be made against their decisions.

11.2. Driving Standards Observers must provide a full written report, to the Clerk of the Course as soon as possible before publication of provisional results.

11.2.1. Details of any penalty applied by the Observer must be included in the published results.

11.2.2. The names of any Observers should either be given in the Final Instructions or posted on an Official Notice Board at signing-on not less than 30 minutes before the first car is due to start (R.2.8.1).

11.2.3. The SRs for the event should state that Driving Standards Observers are being appointed.

Race Observers (Q.3.1, Q.4.1)

11.3. The Organisers or Motorsport UK can appoint Motorsport UK-licensed Driving Standards Observers to monitor driving standards at all grades of Race meetings.

11.3.1. Any Motorsport UK-licensed Race Clerk of the Course is automatically considered a Motorsport UK-licensed Driving Standards Observer.

11.3.2. The names of the Driving Standards Observers should either be given in the Final Instructions or posted on the Official notice board not less than 30 minutes before the start of the first practice session.

11.3.3. All Driving Standards Observers should provide a full written report on any adverse driving standards to the Clerk of the Course as soon as possible, with copies made available to adjoining Observers' posts as appropriate.

Marshals

12.1. An adequate number of competent Marshals must be on duty throughout any event, allocated to locations and duties appropriate to their individual experience and training.

12.1.1. Marshals appointed to control spectator or Competitors should be on duty at least half-an-hour in advance of the expected time of arrival.

Declarations and Understandings

13.1. All Officials and Marshals at an event must identify themselves by signing on in order to obtain Personal Accident Insurance cover. They must also sign the following undertaking:

'I agree to act in an Official capacity at this meeting and in consideration of this the organising club(s) have effected for my benefit a Personal Accident Insurance Policy for death or benefits as prescribed more specifically by Motorsport UK. I have been given an opportunity to read the General Regulations of Motorsport UK and, if any, the Supplementary Regulations for this event and agree to be bound by them.

'I declare that I am physically and mentally fit to carry out my duties and that I will inform the Organisers immediately should any change in my condition occur which I have reason or ought to have reason to believe would affect my ability to carry out my duties. I acknowledge that I understand the nature and type of competition and that as an Official, I may be exposed to the potential risk inherent in motor sport and I will undertake my duties with their associated risks with due and proper regard for my safety and that of others. 'Further, I under-stand that all persons having any connection with the promotion and/or organisation and/or conduct of the event are insured against loss or injury caused through negligence. I declare that I am not suffering from any infirmity or physical disability likely to affect the performance of my duties as an Official of the event.'

'I hereby agree to abide by Motorsport UK Safeguarding Policy and Guidelines.'

13.1.1. All Officials, Marshals and members of the media must be identified by armlets, tabards or badges (D.32.3) which are not transferable.

13.1.2. They undertake their duties at their own risk and must go no nearer the course than is essential to perform their duties.

13.1.3. No Official under the age of 18 should be given duties that require them to be outside an enclosure, unless under the direct supervision of an experienced adult Official.

13.1.4. Organising clubs should refrain from using any person under the age of 16 for any duty that may place them in a position of danger.

13.1.5. Organisers should be in possession of the addresses of all Marshals and Officials.

13.1.6. Any person under the age of 18 signing-on as specified in 13.1 and where the Parent is not present must be accompanied by a Guardian who must produce a written and signed Authorisation from the Parent to act as Guardian.

13.2. Accredited members of the Media (who must be at least 18 years of age) must sign the following undertaking:

'I declare that I am over 18 years of age and agree to act, at all times, in accordance with the instructions of Officials of the event. I further declare that I am physically and mentally fit to carry out my function and that I will inform the Organisers immediately should any change in my condition occur which I have reason or ought to have reason to believe would affect my ability to carry out my function.

'I acknowledge the nature and type of the competition and that while undertaking my duties I may be exposed to the potential risk inherent in motor sport and that I will undertake my function with its associated risks with due and proper regard for my safety and that of others. I understand that all persons having any connection with the promotion and/or organisation and/or conduct of the event are insured against loss or injury through their negligence.'

'I hereby agree to abide by the Motorsport UK Safeguarding Policy and Guidelines.'

Commentators

14. The commentator is not regarded as an Official of the meeting but must nevertheless ensure that any comment made should not imply that a regulation has been broken, or that action should be taken against a Competitor or Official. Official statements must only be issued under the authority of the Clerk of the Course.

Medical Arrangements

15.1. All doctors attending motor sport meetings as medical officers must be in possession of a valid licence to practice, members of a recognised medical defence organisation and covered by insurance for work outside of a hospital.

Foundation Year 1 and Foundation Year 2 doctors may not act as medical officers at an event. Trainees beyond Foundation Year 2 must ensure that the Approved Practice Setting restriction has been removed from their licence by the GMC.

15.1.1. Doctors must be aware that they are expected to provide themselves with the equipment the see necessary for the proper performance of their duties.

15.1.2. It is recommended that Doctors should wear readily identifiable (preferably red) protective overalls or tabards. The backs should display the word Doctor.

15.1.3. Full details of equipment required and duties of Medical personnel are given in Section E.

15.1.4. The Anti-Doping Control Official, in conjunction with the Clerk of the Course and the Stewards, may carry out spot checks on Competitors or Officials, to ascertain whether they are using drugs or alcohol (D.25.1.14).

Officiel d'Honneur

16.1. Officials who have completed their active service to motor sport may be invited by Motorsport UK to become an Officiel d'Honneur.

16.1.1. This will entitle them to various privileges and their advice may be called upon to make optimum use of their wealth of experience.

Licensing of Officials

17.1. The duties and responsibilities of all Officials are detailed in 1 to 16.

17.1.1. It is expected that, as representatives of the Motorsport UK, licensed Officials in particular will be suitably dressed for their role and be readily identifiable as Motorsport UK Licensed Officials.

17.1.2. The Motorsport UK Official Licence is the most appropriate means of identification and should be carried at all times when acting in the capacity of a licensed Official. Remember that smart, functional and appropriate clothing will add significantly to the status and identity of licensed Officials when dealing with Competitors or the general public.

17.1.3. Every person, body or group of people shall, upon holding an appointment of Motorsport UK, whether as an Official, Council or Committee member, be deemed to have and recognise that they have:

(a) Made themselves acquainted with these Regulations.

(b) Submitted themselves without reserve to the consequences resulting from these Regulations.

(c) Agreed they will not become concerned in any action in law against Motorsport UK, MSC, their Officials or any other persons or board subject to these Regulations, without the prior written consent of Motorsport UK, or as a result of their own personal injury or death.

Officials' Licensing

17.2. Officials are registered by the issuing of an Official Licence by Motorsport UK, assuming the applicant's credentials have satisfied Motorsport UK requirements.

17.2.1. Motorsport UK reserves the right at all times to refuse to issue an Official Licence, stating the reasons why.

17.2.2. An Official Licence issued will remain the property of Motorsport UK, which reserves the right to withdraw or suspend it at any time, stating the reasons why.

17.2.3. An Official Licence granted by Motorsport UK does not constitute a certificate of the competency of the holder.

Acts Prejudicial to Motor Sport

17.3. An Official Licence holder who does anything to bring motor sport into disrepute, or commits an act prejudicial to the interest of motor sport generally, may face disciplinary action and an Official under investigation for such a matter may have any Licence suspended pending conclusion of the investigation or other action (A.2.2.1.1 – A.2.2.1.4 and C.1.1.4).

Ages

17.4. Applications for those under 18 years of age must be counter-signed by a Parent or Guardian. Proof of guardianship may be required.

17.4.1. As a general principle, all senior Officials should be at least 18 years of age.

17.4.2. When certain Officials have completed their active service, they may be invited by Motorsport UK to become an Officiel d'Honneur, and will then be entitled to various privileges. Their advice may be called upon to make optimum use of their wealth of experience.

Period and Validity

17.5. Unless otherwise rendered invalid, the period of validity of all Licences, for the purposes of acquaintance and submission to these rules, runs from the 1st January to the end of the calendar year shown on the Licence.

17.5.1. To be valid, an Official Licence must be signed in ink and must bear a passport type photograph of the holder, being a current likeness.

17.5.2. The Motorsport UK Official Licence, is issued bearing the holder's name, Licence number, Licence grades and photograph.

17.5.3. Stewards will be issued with a Motorsport UK Stewards Badge in addition to their Motorsport UK Officials Licence. The badge shall bear the holder's name, licence number and photograph.

Holder's Indemnity and Undertakings

17.6. Once granted a Motorsport UK Official Licence, the holder binds themselves to the following requirements and undertakings (A.2.6.1):

17.6.1. They will abide by the Motorsport UK Regulations, and any amendments or additions, which may be in force at any time that the Licence is used for the purpose of officiating at a motor Competition.

17.6.2. They acknowledge that anyone having any connection with the promotion and/or organisation and/or conduct of an event is insured against loss or injury caused through their negligence.

17.6.3. Whilst officiating at an event, they must be medically fit to do so and to carry out their required duties.

17.6.4. They should not consume any alcohol or banned substances before or during an event.

17.6.5. They may not compete in an event for which they are nominated as an Official. This includes anybody nominated as an Official in the regulations or programme of an event, even though the individual named does not in fact carry out his Official duties.

17.7. All Officials, Marshals and members of the media must be identified by tabards or badges (D.32.3), which are not transferable.

17.7.1. They undertake their duties at their own risk and must not go nearer the course than is essential for the performance of their duties.

17.7.2. No Official under the age of 18 should be given duties that require them to be outside an enclosure, unless they are under the direct supervision of an experienced adult Official.

17.7.3. Organising Clubs should not use any person under the age of 16 for any duty that may place them in a position of danger.

17.7.4. Organisers should be in possession of the addresses of all Marshals and Officials.

17.7.5. Any person under the age of 18, signing-on as specified in 13.1 and where the Parent is not present must be accompanied by a Guardian who must produce a written and signed Authorisation from the Parent to act as Guardian.

Licence Retention and Downgrading

17.8. Applicants may retain their Licences if they meet the criteria set out below.

17.8.1. If an applicant, for whatever reason, does not qualify to retain their current Licence grade, they will be automatically downgraded according to these regulations.

17.8.2. Upon renewal an applicant may voluntarily take out a Licence of lesser grade than they are entitled to.

Licence Upgrading Procedure

17.9. Any applicant wishing to upgrade their Licence on renewal, and who has met the upgrading criteria detailed in this section, should forward the completed Officials Licence Renewal Form, together with the appropriate qualification criteria and the required payment, to the Licence Section.

17.9.1. Applicants wishing to upgrade a current Officials Licence should forward a written request, together with the appropriate fee (if any) and the appropriate qualification criteria as detailed within this section, to the Motorsport UK Licence Section.

Officials' Expenses

17.10. Officials must disclose fees earned from motor sports activities to the Her Majesty's Revenue and Customs and account for tax where necessary.

17.10.1. Advice on any potential tax liabilities should be available from their local tax office.

17.10.2. The specific reimbursement of actual costs should not create a tax liability and individuals falling solely within this category and not receiving any fees need not report them on their annual tax return.

Clerks of the Course

18.1. Applications for a new Clerk of Course Licence must be accompanied by a nomination from a Club which organises events within the appropriate discipline.

18.1.1. An applicant's previous motor sporting experience will be taken into account. Refer to the individual discipline criteria for exceptions.

18.1.2. Motorsport UK reserves the right to appoint candidates to any grade.

18.1.3. All licensed Clerks of the Course are required to attend at least two out of three consecutive Motorsport UK Clerk of the Course seminars for which they are eligible to maintain their status.

18.1.4. In addition to the requirement of 18.1.3, and for Race and Kart only, to maintain an existing grade the applicant must have acted as Clerk of the Course or Deputy Clerk of the Course at three events of that grade within 24 months. The period is as defined in the qualification period below.

Qualification Period

18.2. The twelve months qualification period will run from the 1 January to 31 December annually.

Regrading

18.3. All names on the Clerk of the Course list will be reviewed annually and may be regraded.

18.3.1. The review will take into consideration the applicant's experience and record of active participation.

Upgrading

18.4. Requests for upgrading must be supported in writing by a Club which organises events within the appropriate discipline.

18.4.1. Refer to the individual disciplines within this section for the relevant upgrading criteria.

18.4.2. Once all supporting documentation has been received Motorsport UK may arrange for applicants to be observed in the performance of their duties. The applicant must provide a list of scheduled events when submitting an application for upgrade. In addition Motorsport UK may require applicants to take part in either a written or oral examination before the upgrading of any Licence.

Clerk of the Course Licence Grades

18.5.1. *Assistant:* May only work as an Assistant Clerk of the Course at a Clubman or Interclub meeting.

18.5.2. *Deputy:* May act as Deputy/Assistant Clerk of the Course up to and including National status meetings.

18.5.3. *National:* May act as Clerk of the Course up to and including National status, as a permanent Clerk to a Motorsport UK registered Race Championship, or as Deputy/Assistant to a higher grade Clerk of the Course at International events.

18.5.4. *International:* Only an International Clerk of the Course may take charge of an International event.

Officiating Capacity

18.5.5. For exceptions to the definitions as detailed below, refer to the individual criteria within this section. (See Chart 18 at the end of this section.)

Definition of Deputy and Assistant Clerk of Course

18.5.6. Deputy Clerks of the Course may act on behalf of the Clerks of the Course in their temporary or permanent absence or unavailability.

18.5.7. Assistant Clerks of the Course assist the Clerks in the performance of their duties, but may not act on their behalf at any time.

18.5.8. All Assistant Clerks of the Course with the exception of Cross Country, Stage Rallies, Sprints and Hill Climbs, must be licenced.

Race Clerk of the Course

19.1. In the case of all Race events, the Clerk of the Course must hold a Clerk of the Course Licence issued by Motorsport UK and valid for the particular grade of meeting.

19.1.1. There is no restriction on the maximum number of Clerks of the Course at any race meeting however one must be nominated as Senior Clerk of the Course responsible for the overall control of the Meeting.

19.1.2. Where a Championship/Series permanent Clerk of the Course is appointed, they must be the holder of a current Clerk of the Course National licence, as a minimum and they shall not be included in the above numbers.

19.1.3. The maximum number of Deputy/Assistant Clerks of the Course for any race meeting shall be two (except at International meetings).

19.2. The following conditions will need to be met before the Clerk of the Course Licence may be endorsed and signed by the Motorsport UK Steward in respect of upgrading or retention.

19.2.1. The Clerk of the Course must present their Officials licence at the start of the day.

19.2.2. The licence must not have been pre-completed by the Clerk.

19.2.3. The Clerk of the Course must be on duty throughout the day, if they are present only as a permanent Clerk of a Championship they will not be granted a signature. The Senior Clerk must provide a review to the Steward of the individual's performance, throughout the day which should include:

(a) What duties were performed and the quality of their performance.

(b) That the Clerk has presented satisfactory communication skills which did not exacerbate situations.

(c) That he/she has satisfactorily dealt with judicial matters which may include judicial hearings.

(d) The status of the race(s) clerked should be recorded i.e., not necessarily highest status of meeting.

19.2.4. If the Clerk of the Course is the Senior Clerk for the event then they must have remained on duty throughout the day and satisfactorily managed the running of the meeting, including liaising with Competitors and fellow Officials.

Officiating Capacity

19.3. This is as detailed above with the following exceptions:

19.3.1. *International CofC:* Only an International Clerk of the Course may take charge of a British Championship race. An application for an International Clerk of the Course to take charge of an FIA Championship race must be submitted by the race organising Club and will be considered by Motorsport UK on an individual and annual basis.

Upgrading

19.4.1. *Assistant to Deputy Race:* An applicant wishing to upgrade to Deputy must satisfactorily complete the Clerk of the Course modular training programme.

19.4.2. *Deputy to National:* Applicants must have received signatures from a Motorsport UK Steward for acting satisfactorily as Deputy Clerk of the Course at 9 Club or National and must include at least three National meetings over a period of not less than 12 months and not more than 36 months immediately preceding the application to upgrade, and at a minimum of two venues. In addition they must have attended at least one Motorsport UK Clerk of the Course seminar during the upgrading period.

19.4.3. *National to International:* Applicants must have received signatures from a Motorsport UK Steward for acting satisfactorily as Deputy Clerk of the Course for the International element of six International race meetings, over a period of not less than 12 months and not more than 36 months immediately preceding the application to upgrade, and at a minimum of three venues.

19.4.3.1. Applications for upgrading to International must be justified to Motorsport UK by a race organising Club. Applicants must have National Clerk of the Course status with extensive experience and may be required to attend an Appointments Panel (18.4.3.). Any International licence, once authorised, will only be issued for the calendar year and on an appointment basis.

Sprint or Hill Climb Clerk of the Course

20.1. For Sprints or Hill Climbs, the Clerk of the Course must hold a Licence issued by Motorsport UK and valid for the particular grade of meeting.

20.1.1. At all National and higher status events, there should be at least one, but not more than two, licensed Deputy/Assistant Clerks of the Course, in addition to the Clerk of the Course.

20.1.2. At all other events it is recommended that there should be at least one, but not more than two, Deputy/Assistant Clerks of the Course in addition to the Clerk of the Course.

Officiating Capacity

20.2. International: Only an International Clerk of the Course can take charge of an FIA Championship event. Their name must be submitted by the race organising Club and will be considered by Motorsport UK on an individual basis.

Upgrading

20.3.1. *Assistant to Deputy:* Applicants must follow the Clerk of the Course modular training programme.

20.3.2. *Deputy to National:* Applicants must have received signatures from a Motorsport UK Steward at a minimum of six Hill Climbs or Sprints, at which they have officiated satisfactorily as Deputy Clerk of the Course. All signatures must have been obtained over a period of not less than 12 months and not more than 36 months immediately preceding the application to upgrade and at a minimum of two venues. In addition they must have attended at least one Motorsport UK Clerk of the Course seminar during the upgrading period.

20.3.3. *National to International:* Applications for upgrading to International must be justified to Motorsport UK by an organising Club and applicants may be required to attend an Appointments Panel. Applications will only be accepted from National Clerks of the Course with extensive experience (18.4.3.). Any International licence, once authorised, will only be issued for the calendar year and on an appointment basis.

Rallycross Clerk of the Course

21.1. In the case of all Rallycross events, the Clerk of the Course must hold a Clerk of the Course Licence issued by Motorsport UK and valid for the particular grade of meeting.

Officiating Capacity

21.2. As detailed above, with the exception to the following:

21.2.1. Deleted.

21.2.2. *International:* Only an International A Rallycross Clerk of the Course may take charge of the Rallycross Grand Prix. Applications for an International Rallycross Clerk of the Course to take charge at an FIA Rallycross Championship event must be submitted by the organising Club and will be considered by Motorsport UK on an individual basis (18.4.3.). Any International licence, once authorised, will only be issued for the calendar year and on an appointment basis.

Upgrading

21.3.1. *Assistant to Deputy:* An applicant wishing to upgrade to Deputy must follow the Clerk of the Course modular training programme.

21.3.2. *Deputy to National:* Applicants must have received signatures from a Motorsport UK Steward at a minimum of three Rallycross meetings at which they have officiated satisfactorily as Deputy Clerk of the Course and at least one of which must be a National Rallycross event. All signatures must have been obtained over a period of not less than 12 months and not more than 36 months immediately preceding the application to upgrade and at a minimum of two venues. In addition they must have attended at least one Motorsport UK Clerk of the Course seminar during the upgrading period.

21.3.3. *National to International:* Applicants must have received signatures from a Motorsport UK Steward at a minimum of two National Rallycross meetings at which they have officiated satisfactorily as Clerk of the Course, and have acted as Deputy Clerk of the Course at two International Rallycross meetings over a period of 36 months. An application for upgrading to International must be justified to Motorsport UK by an organising Club and applicants may be required to attend an Appointments Panel (18.4.3.). Any International licence, once authorised, will only be issued for the calendar year and on an appointment basis.

21.3.4. Deleted.

Cross Country Clerk of the Course

22.1. The Clerk of the Course for a Competitive Safari, Hill Rally or Baja of National status or above must hold a valid CofC Licence issued by Motorsport UK valid for that grade of meeting.

Officiating Capacity

22.2. As detailed above, with the following exceptions:

22.2.1. *National:* May act as Clerk of the Course at Competitive Safaris or Hill Rallies up to and including National.

22.2.2. *International:* May act as Clerk of the Course at all categories of Competitive Safari, Hill Rally or Baja.

First time applications – Assistant

22.3. Only Clubs that organise Competitive Safaris and/or Hill Rallies may submit a nomination for an Assistant Licence. An applicant's previous motor sporting experience will be taken into account.

22.3.1. *Assistant to Deputy:* An applicant must follow the Clerk of the Course modular training programme.

Upgrading

22.4.1. *Deputy to National:* Applicants must produce signatures on their Licences from a Clerk of the Course showing that they have officiated satisfactorily as an Deputy Clerk of the Course at a minimum of one Competitive Safari or Hill Rally event within the preceding 12 months. Applicants must also be nominated by their Club Committee and must have attended at least one Motorsport UK Clerk of the Course seminar during upgrading period.

22.4.2. *Upgrading to International:* An application for upgrading to International must be justified to Motorsport UK by an organising Club. Applications will only be accepted from National Clerks of the Course with extensive experience, who may be required to appear before an Appointments Panel (18.4.3.). Any International licence, once authorised, will only be issued for the calendar year and on an appointment basis.

Kart Clerk of the Course

23.1. In the case of all Kart events, the Clerk of the Course must hold a Clerk of the Course Licence issued by Motorsport UK and valid for the particular grade of meeting.

23.1.1. The maximum number of Clerks of the Course at any Kart meeting shall be two. One Clerk of the Course must be nominated as Senior Clerk of the Course responsible for the overall control of the Meeting.

23.1.2. Where a Championship/Series permanent Clerk of the Course is appointed, they are not included in the above numbers. The maximum number of Deputy/Assistant Clerks of the Course for any Kart meeting shall be two (except at International Meetings).

Officiating Capacity

23.2. As detailed above, with the exception to the following:

23.2.1. *Endurance:* May act as a Clerk of the Course at Kart Endurance meetings only

23.2.2. *International:* An application for an International Clerk of the Course to take charge of a CIK-FIA Championship race must be submitted by the organising Club and will be considered by Motorsport UK on an individual and annual basis.

Upgrading

23.3.1. *Assistant to Deputy:* An applicant must follow the Clerk of the Course modular training programme.

23.3.2. *Deputy to National:* Applicants must have received signatures from a Motorsport UK Steward for acting satisfactorily as a Deputy Clerk of the Course at six Kart meetings. All signatures must have been obtained over a period of not less than 12 months and not more than 36 months immediately preceding the application to upgrade and at a minimum of two venues. In addition they must have attended at least one Motorsport UK Clerk of the Course seminar during the upgrading period. The signatures must be obtained in not less than twelve and not more than thirty-six months.

23.3.3. *National to International:* Applicants must have been National Kart Clerks of the Course for a minimum of three years, and have received signatures from a Motorsport UK Steward for acting satisfactorily as a Clerk of the Course at six National Kart meetings and as Deputy Clerk of the Course at two International Kart meetings. All signatures must have been obtained over a period of not less than 12 months and not more than 36 months immediately preceding the application to upgrade and at a minimum of three venues. In addition they must have attended at least one Motorsport UK Clerk of the Course seminar during the upgrading period. An application for upgrading to International must be justified to Motorsport UK by an organising Club and applicants may be required to attend an Appointments Panel (18.4.3.). Any International licence, once authorised, will only be issued for the calendar year and on an appointment basis.

Stage Rally Clerk of the Course

24.1. All Special Stage Rally Clerks of the Course are expected to attend at least two out of three consecutive Motorsport UK Clerk of the Course seminars for which they are eligible.

24.1.1. Motorsport UK may require applicants to take part in a written or oral examination before the upgrading of any Licence.

24.1.2. All names on the Clerk of the Course list will be reviewed annually and may be re-graded.

24.1.3. Only Clubs who organise Special Stage Rallies may submit a nomination for an Assistants licence. An applicant's previous motor sporting experience will be taken into account.

Officiating Capacity

24.2. As detailed above, with the following exceptions:

24.2.1. *National:* May act as Clerk of the Course at Special Stage Rallies up to and including National status.

24.2.1.1. *SVSR National:* SVSR National: May only act as Clerk of the Course at Single Venue Stage Rallies up to and including National status.

24.2.2. *International:* May act as Clerk of the Course at all categories of Special Stage Rally.

Upgrading

24.3.1. *Assistant to Deputy:* An applicant must follow the Clerk of the Course modular training programme.

24.3.2. *Deputy to National:* Applicants must produce signatures on their Licences from a Clerk of the Course showing that they have officiated as a Deputy Clerk of the Course at a minimum of one Multi-Venue Stage Rally event within the preceding 12 months. A holder of the restricted SVSR only National Stage Rally Clerk of the Course licence may apply for the unrestricted licence having satisfied the requirements of 24.3.2. and 24.3.2.2.

24.3.2.1. An applicant may request a restricted Single Venue Only National Stage Rally Clerk of the Course licence having produced a signature showing that they have officiated as a Deputy Clerk of the Course at a minimum of one Single-Venue Stage Rally within the preceding 12 months.

24.3.2.2. Applicants must also be nominated by their Club Committee and have attended at least one Motorsport UK Clerk of the Course seminar during the upgrading period in addition to having followed Appendix 1 of the Clerk of the Course modular training program.

24.3.3. *National to International:* An application for upgrading to International will only be considered from holders of the unrestricted National Stage Rally Clerk of the Course licence and must be justified to Motorsport UK by an organising Club. Applications will only be accepted from National CofCs with extensive experience, who may be required to appear before an appointments panel. (18.4.3.). Any International licence, once authorised, will only be issued for the calendar year and on an appointment basis.

Forestry Liaison Officers

25.1. Motorsport UK has appointed Forestry Liaison Officers (FLOs) to each Forest District to provide a liaison between Organising Clubs, Motorsport UK and Natural Resources Wales, Forestry and Land Scotland and Forestry England.

25.1.1. The FLOs and the areas for which they are responsible are listed in the Appendices.

25.1.2. The detailed Regulations regarding the arrangements for the authorisation of events seeking use of the Enterprise's land are available from Motorsport UK.

25.1.3. However, it is important that Clubs who are seeking usages DO NOT contact the Forestry direct, but channel their enquiries through the appropriate FLO who will give guidance as to likely availability and specific problems on the use of particular forests.

Route Liaison Officers

26.1. Integral with Motorsport UK's authorisation of motor rallies under the Motor Vehicles (Competitions and Trials) Regulations are responsibilities to consider the extent to which the holding of an event might prejudicially affect the safety, amenity and confidence of members of the public.

26.1.1. This responsibility is one that Motorsport UK takes seriously. It is accountable not only to the Department for Transport and the Minister responsible for the enforcement of the Regulations, but also to members of the public who may be affected by the event and feel it necessary to voice their objections, either directly to us, or via the Police, local Councils or their MP.

26.1.2. For this reason Motorsport UK appoints a Route Liaison Officer (RLO) to each of the County Police Authorities.

26.1.3. These Liaison Officers undertake duties on behalf of the Competition Authorisation Office (CAO) and must be considered as "Officials of Motorsport UK".

26.1.4. It is important that they are seen to act impartially with all Clubs.

26.1.5. The RLO's and the areas for which they are responsible are listed in the Appendices.

Radio Co-ordinators

Motorsport UK Safety and Medical Frequency

27.1. The Motorsport UK appoints Radio Co-ordinators for assistance in the administration of the Motorsport UK Safety and Medical Frequency.

27.1.1. These Co-ordinators hold lists of approved Radio Controllers in their respective areas.

27.1.2. Details of the radio procedure to be used for this frequency are available from Motorsport UK. Motor Clubs may consult with these Co-ordinators over operational procedures, administrative matters and the organising of specific training days.

Radio Controller Probationary

Qualification

27.2. Applicants must be 18 years of age and over, Motorsport UK registered Rally Marshals at a minimum of Senior Stage Marshal level and have attended:

27.2.1. For Single Venue grade: at least five Single Venue Rallies as a radio operator.

or

27.2.2. For Multi-Venue grade: at least 10 Rallies (of which a minimum of five must have been Multi-Venue events) as a radio operator.

Training Period and Requirements

27.3. Applicants must:

27.3.1. Liaise with a Motorsport UK Radio Co-ordinator regarding initial training requirements.

27.3.2. Hold a Probationary Controller Licence.

27.3.3. Collect signatures from active Licensed Motorsport UK Radio Controllers and event Clerks of the Course, as validation of undertaking the following duties (one set of signatures is required per event):

(a) Sitting in control during three events.

(b) Assisting in controlling three events.

(c) Being involved in the pre-event organisation of three events.

27.3.4. Attend at least one out of three consecutive Motorsport UK Seminars to which they are invited.

27.3.5. Complete all the required tasks referred to in the Trainee Motorsport UK Safety & Medical Communications Controllers Log Book. This Modular Training Programme must be completed in not less than 12 months and not more than 36 months from date of appointment as Probationary.

Upgrading

27.4. For applicants upgrading to a Multi-Venue Radio Controllers Licence, 27.3.3 a), b) and c) above must be completed at Multi-Venue Rallies.

Radio Controller

Qualification

27.5. Applications may be received from Probationary Radio Controllers who have satisfied the requirements of 3. above. Applications must be accompanied by a letter of endorsement from a Motorsport UK Radio Co-ordinator.

Maintenance Criteria

27.6. In order to maintain their grade, Controllers should:

27.6.1. Apply annually to re-Licence providing evidence as below.

27.6.2. Attend at least one out of three consecutive Motorsport UK Specialist Seminars to which they are invited.

27.6.3. Gain a minimum of three signatures from Clerks of the Course annually to verify continued activity as a Controller. Alternatively, under exceptional extenuating circumstances, gain a Motorsport UK Radio Co-ordinator's signature to support re-licensing.

27.6.4. Failure to produce evidence of the maintenance may result in a review of the grade issued.

Technical Officials

Appointments (7)

28.1. The Technical Group comprises Scrutineers (both Car and Kart) and Technical Commissioners. (See Chart 28 at the end of this section.)

28.1.1. All members of the Technical Group are licensed annually by Motorsport UK.

28.1.2. Because of technological advances in materials and design and the rapid evolution and complexity of technical regulations, licensing will also relate to the various categories shown.

28.1.3. The objective is to provide a better match of the experience and qualifications of the Officials to the task required of them, as well as assisting Clubs in contacting the people most suitable for their events.

28.1.4. In order that Scrutineers and Technical Commissioners meet the ever-increasing demands of Motor Sport, it is clearly essential that standards be safeguarded. To this end Chief Scrutineers are required to monitor attendance and performance of Scrutineering personnel at their events.

28.1.5. Maintenance and upgrading details for all Scrutineer grades, and details of the requirements for grade maintenance and upgrading, are available from the Technical Department at Motorsport UK.

Trainee Scrutineers

28.2.1. Trainee Scrutineers are a most important Group since they provide the senior Officials of the future.

28.2.2. Their potential, enthusiasm and commitment is comprehensively assessed before they are appointed as Scrutineers.

28.2.3. Though not listed in this Yearbook (nor eligible for expenses), they are registered with Motorsport UK who would urge Clubs to actively recruit suitable candidates and provide 'on-the-job' training and experience through their Chief Scrutineers.

28.2.4. Conversely, Trainee Scrutineers should seek tutors and mentors to help them progress.

Qualification

28.3. The organisation chart at the end of this section indicates the age, experience and qualifications required for each Group.

28.3.1. The minimum time may be reduced dependent upon number of events attended, and the qualifications, suitability and aptitude of the individual.

28.3.2. It is not intended that the system affects existing Scrutineers, where many years of experience have proved invaluable, other than in the prudent application of maximum ages commensurate with the task required and allowing younger people to take on more responsibilities. Members of this Group, following the conclusion of their active service, may be invited to become 'Officiel d'Honneur'.

28.3.3. They will be entitled to various privileges and it is expected that their advice will be called upon to make optimum use of their wealth of experience.

Training

28.4. Motorsport UK has established formal training schemes for those wishing to become Licensed Technical Officials (including Environmental Scrutineers).

28.4.1. Prospective trainees (who must be over 16), and Licensed Technical Officials wishing to become Eligibility Scrutineers, should contact the Technical Department at Motorsport UK who will identify the most suitable contact to provide one-to-one training and instruction and make the arrangements for the following twelve months' training period.

28.4.2. It is a requirement that all Scrutineers attend two out of three annual Seminars to maintain their appointment.

28.4.3. All Appointments are reviewed annually by Motorsport UK.

28.4.4. Motorsport UK may reduce the minimum requirements dependent upon the number of meetings attended, qualifications, suitability, aptitude and geographical location.

28.4.5. If a Scrutineer does not undertake the duties associated with their grade or fails to maintain the required standard, they may not necessarily be reappointed to the same grade the following year.

28.4.6. For Kart Scrutineers requiring signatures for Chief Scrutineer status, signatures must be provided by the Motorsport UK Steward of the meeting.

Upgrading and Maintenance

28.5. Candidates for Scrutineer grade will be appointed from Trainee Scrutineers.

28.5.1. Candidates will be required to submit to Motorsport UK with their application completed training modules and a CV, and letters of recommendation from Licensed Scrutineers including a Chief Scrutineer.

28.5.2. The outline requirements for further upgrading are shown in the Organisation Chart at the end of this section; full details are available from Motorsport UK.

28.5.3. At every stage of the upgrading process, an important requirement will be the recommendations of at least two Scrutineers (one of whom must be a Chief Scrutineer) who will have been building up data on attendances, performance, potential, commitment, preferences and suitability for the various categories.

28.5.4. All appointments are reviewed annually.

28.5.5. It is a requirement that all Scrutineers attend two out of three annual Seminars to maintain their appointment.

28.6.

28.6.1. *Trainee Scrutineer to Scrutineer*

Applications must be 18 or over and their application must include the following:

(a) Attendance at an annual Motorsport UK Technical seminar

(b) A letter of recommendation to upgrade from their mentor/trainer

(c) Completion of training modules one and two.

28.6.2. *Scrutineer to National Scrutineer*

(a) Applications for upgrading must be made in writing directly to the Motorsport UK Technical Department.

(b) Applicants must have acted as Scrutineer at a minimum of twenty meetings and held a full Scrutineer licence for a minimum of 24 months.

(c) The relevant training module booklet must be completed.

(d) Applicants must be assessed in person at two events by two different Assessor Scrutineers appointed by the Motorsport UK Technical Department.

28.6.4. *International Scrutineer/Environmental Inspector/Technical Commissioner/Assessor Scrutineer*

These grades are by appointment of the Motorsport UK Appointments Panel only. Applications for these grades should be submitted in the first instance to the Technical Department at Motorsport UK.

28.7. The total costs for the provision of Technical Officials is a matter for negotiation and prior agreement between the Organising Club and the Chief Scrutineer or Official in charge of the technical team.

For guidance only, the Technical Advisory Panel has recommended a maximum daily expense rate of £40 and 45 pence per mile for travel.

Officials are reminded of their obligation to disclose fees earned from motor sports activities to the HMRC and to account for tax where necessary. Advice on any potential tax liabilities should be available from their local tax office. The specific reimbursement of actual costs should not create a tax liability and individuals falling solely within this category and not receiving any fees need not report them on their annual tax return.

Timekeepers

Appointments (6)

29.1. Timekeepers are appointed and licensed annually by Motorsport UK, and are subdivided into groups according to their specialisation, ability and experience.

29.1.1. Timekeepers must be of a suitable age and physically capable of meeting the requirements of their grade.

29.1.2. Motorsport UK reserves the right to revoke an appointment at any time. (Please see Chart 29.)

29.2. Initial application for appointment should be made on the Officials' Licence Application Form available from Motorsport UK, accompanied where appropriate by a recommendation from the Club or Timekeeper for whom the applicant has carried out duties.

29.2.1. Except for Trainees, a fee is payable for the annual appointment and includes the cost of this Year Book containing the Motor Sport Regulations.

29.2.2. Newly appointed Timekeepers will be required to commence at an Assistant or Trainee grade, but a higher grade appointment may be given to suitably qualified applicants at the discretion of the Timekeeper Training Panel.

Requisite Qualifications

29.3. Timekeepers, Handicappers and Technical Officials are appointed and licensed annually by Motorsport UK and are subject to an annual review of their ability, experience and record of active participation.

29.3.1. Motorsport UK reserves the right to revoke an appointment at any time.

29.3.2. Timekeepers should have no connection with any particular trader's or manufacturer's business that might benefit in a direct or indirect way from the result of the Competition.

Training

29.4. For persons with no previous experience or recommendation, their application should be forwarded to Motorsport UK who will arrange with the Timekeeper Training Panel to organise a training programme with a suitable mentor in their chosen specialisation. Each trainee will be provided with a Timekeeper Training Log Book.

Upgrading

29.5. Subject to prior arrangement with the Chief Timekeeper of an event, new Timekeepers are encouraged to attend, observe and assist at all types of event with a view to eventual upgrading.

29.5.1. Specific upgrading requirements are available from Motorsport UK.

29.5.3. Application for the grade of Rally Timekeeper must be made via the Regional Association of the Club requesting the appointment.

Licence Grades

29.6. ***Race***

29.6.1. *International Race:* may take charge at all race events.

29.6.2. *National Race:* may take charge of all race events up to and including National.

29.6.3. *Timekeeper Race:* under the direction of the Chief Timekeeper, may carry out the duties required to time the passage of Competitors at race events.

29.7. *Kart*

29.7.1. *Timekeeper Kart:* may take charge at all Kart race events up to and including Interclub.

29.7.2. *Timekeeper Kart National:* may take charge at all Kart race events up to and including National.

29.8. *Speed*

29.8.1. *International Speed:* may take charge at all Speed events and World Record attempts.

29.8.2. *National Speed:* may take charge at all Speed events up to and including National and National record attempts.

29.8.3. *Timekeeper Speed*: may take charge at Clubman Speed events.

29.9. *Rally*

29.9.1. *International Rally:* may take charge at all Rallies up to and including International.

29.9.2. *National Rally:* may take charge at all Rallies up to and including National.

29.9.3. *Rally Timekeeper (29.5.3):* may take charge at all Rallies up to and including Interclub (Manual timing only).

Assistant/Trainee

29.10. Assistants shall be competent in at least one recognised timekeeping function. Trainees are in training to become Timekeepers.

Handicapper

29.11. A Handicapper is a person licensed by Motorsport UK responsible for the assessment of handicaps to be applied to a Competition.

Timing Equipment – Classification and Certification

29.12.1. It is mandatory for all timing equipment used to establish and publish times at Motorsport UK Permit events to be of a type which has a current Motorsport UK Certificate of Approval for Use, and to be tested and certified in accordance with Chart 29.12, shown at the end of this section.

29.12.2. Detailed specifications for all classes of approved equipment are available from Motorsport UK or any member of the Motorsport UK Equipment Test Panel, with whom new purchasers or builders of equipment are advised to make contact. Specifications detailing the use of laser equipment are also available from Motorsport UK (6.6.2).

29.12.3. To obtain a Motorsport UK Certificate of Approval for Use and Certificate of Accuracy, equipment must be submitted for test to any member of the Motorsport UK Test Panel, in a complete form and as normally used, including any remote operating devices.

29.12.4. Motorsport UK Certificates of Accuracy will only be issued to custodians of equipment, irrespective of ownership.

29.12.5. The Motorsport UK Test Panel for class E/A, E, E/B, E/C, F and R equipment is.

All disciplines:

- T. H. Saunders, 48 Broadlands Drive, Malvern, Worcs WR14 1PW. Tel: (h) 01684 561966; (m) 07814 696230 Email: tim@sangers.org.uk

Rally and E/B only:

- R. Smith, Turner Timing, 6 Mortimer House, Chorley New Road, Horwich, Bolton, BL6 5QE. Tel: 07969 055286. Email: russ@turnertiming.co.uk

Timekeeping Officials' Expenses

29.13. The total costs for the provision of timekeeping services is a matter for negotiation and prior agreement between the Organising Club and the Chief Timekeeper or Official in charge of the timekeeping team. For guidance only, the Timekeeping Advisory Panel has recommended a maximum daily expense rate of £40 and 45 pence a mile for travel. Officials are reminded of their obligation to disclose fees earned from motor sports activities to the Inland Revenue and to account for tax where necessary.

Advice on any potential tax liabilities should be available from their local tax office. The specific reimbursement of actual costs should not create a tax liability and individuals falling solely within this category and not receiving any fees need not report them on their annual tax return.

Marshals' and Officials' Training

30.1. Each year Motorsport UK organises around 100 training days targeted at its range of licensed and volunteer Officials which in total attract over 5,000 participants. In addition, other specialist training is undertaken according to need at National, Regional and local level.

30.1.1. Training policy is co-ordinated by Motorsport UK with Annual Seminars led by senior Motorsport UK staff and delivered by a team of National and International Clerks of the Course and Stewards.

30.1.2. Specialist training days are delivered by Motorsport UK staff and Specialist Committee members.

30.1.3. A network of over 100 Motorsport UK Training Instructors – all trained to a common standard by Motorsport UK – delivers the majority of Marshal Training Days.

Training Day Organisation

30.2. Clubs or Associations intending to run training days are advised to make contact with Motorsport UK for advice and guidance. Training which conforms to certain Motorsport UK criteria may qualify for grant aid assistance.

National Marshals Register

30.3. Motorsport UK administers a National Marshals Register, from basic entry level through defined upgrading pathways to senior Official. Details of the scheme rules are circulated to all those registered and are available on request from Motorsport UK.

Stewards

31.1. Stewards of a Meeting must not in any way be responsible for its organisation and must not have any executive duty in connection with the meeting.

31.1.1. In the discharge of their duties they must not incur any responsibility except to Motorsport UK.

31.1.2. In a meeting comprising several events there may be different Stewards of the Meeting for each event.

31.1.3. When Motorsport UK has appointed one or more of the Stewards of the Meeting, the Steward appointed as the Senior Steward will act as Chairman of the Stewards of the Meeting.

Training

31.2. Training will include an initial interview by an Appointments Panel followed by a modular training programme under the supervision of experienced Motorsport UK Stewards covering issues across a range of motor sport disciplines.

31.2.1. Upon satisfactory completion of the training programme, appointment as a Motorsport UK Steward is made on a probationary basis for the ensuing year.

31.2.2. During this time an experienced Motorsport UK Steward will be available to mentor the probationer at events and provide appropriate feedback.

31.2.3. Subject to receipt of satisfactory reports, the probationer is then appointed to events in their own right as a Motorsport UK Steward.

31.3. Motorsport UK Stewards are required to attend at least two out of three consecutive Motorsport UK Stewards seminars for which they are eligible to maintain their status.

Emergency and Medical Officials

For specific requirements for units and equipment please refer to Section F.

Eligible Paramedics

32.1. Eligible Paramedics may be used as detailed in the Specific Regulations.

32.1.1. A Paramedic (registered with the Health and Care Professions Council – HCPC) attending a motor sport meeting as a result of a commercial contract between the meeting organisers and the Paramedics employers, will be considered as being a Motorsport UK-registered Paramedic for the duration of that specific meeting.

32.1.2. To be Motorsport UK registered applicants must be currently in possession of a valid licence to practice and of adequate valid medical malpractice insurance.

32.1.3. Anyone who ceases to be in possession of a valid licence to practice will be removed from the register.

32.1.4. Paramedics must 'sign-on' and, where appropriate (F.7.3.1), produce their Motorsport UK Paramedic Registration card at any event at which they are officiating.

32.1.5. Paramedics shall remain under the control of the Clerk of the Course at all times.

32.1.6. A Motorsport UK accident form must be completed for each incident treated.

Doctors

32.2. Doctors must be aware that they are expected to provide themselves with such equipment as they deem necessary for the proper performance of their duties.

32.2.1. It is recommended that Doctors wear overalls for protection which should be readily identifiable in colour (preferably red).

32.2.2. The back of the overalls (or any tabard) should be labelled with the word 'Doctor'.

32.2.3. Details of equipment required and duties of medical personnel are given in Section F.

32.3. To be Motorsport UK registered, applicants must be currently registered with the General Medical Council (GMC) and in possession of adequate valid malpractice insurance.

32.3.1. Anyone who ceases to be GMC-registered will be removed from the register.

32.3.2. Doctors must 'sign-on' and where appropriate produce their Motorsport UK Doctor Registration card at any event at which they are officiating. They shall remain under the control of the Clerk of the Course at all times.

Professional Indemnity Insurance Registered Paramedics

33.1. Professional indemnity insurance is required by the above. Within the range of Motorsport UK-arranged insurances, medical malpractice insurance is now provided for volunteer Paramedics (registered with the Health and Care Professions Council) attending Motorsport UK authorised events. This cover does not extend to any other category of medical personnel. It does not cover those Paramedics or medical assistants attending Motorsport UK-authorised events as a result of a commercial contract between their employers and the meeting organisers, promoters or venue owners or operators, where the minimum level of required indemnification is £2,000,000 (Samaritan cover is not adequate). Please forward to Motorsport UK a copy of your insurance certificate in this instance, on application.

Appendix 1: Officials' Licences – Tables, Charts and Diagrams

Table number 6

Event Status	Race	Kart	Speed incl. Records	Stage Rally
International	**International Race	**International Kart	**International Speed	**International Rally
National	National Race Timekeeper	Timekeeper Kart National	National Speed Timekeeper	National Rally Timekeeper
Interclub	National Race Timekeeper	Timekeeper Kart	National Speed Timekeeper	*National Rally Timekeeper
Clubman	National Race Timekeeper	Timekeeper Kart	Timekeeper Speed	*National Rally Timekeeper

* Includes Timekeepers proposed by Regional Associations and approved by Motorsport UK but only when manual timing is used. When automatic timing is used minimum grade is National Rally with Certificate of Competence from timing equipment manufacturer.

** Where an International Event has no National content, an International Timekeeper Licenced by an ASN may be appointed.

Table number 6.6

REQUIREMENT FOR EVENTS TO HAVE CERTIFIED TIMING EQUIPMENT

MOTOR SPORT DISCIPLINE	EVENT STATUS			
	CLUBMAN	INTERCLUB	NATIONAL	INTERNATIONAL
AUTOTEST/SOLO	NO	NO		
ALL TRIALS	NO	NO		
NAVIGATION RALLY	NO (unless sections timed to less than one minute)	NO (unless sections timed to less than one minute)	NO (unless sections timed to less than one minute)	
ROAD RALLY (incl. TARGA, HISTORIC & ENDURANCE)	NO (unless sections timed to less than one minute)	NO (unless sections timed to less than one minute)	NO (unless sections timed to less than one minute)	
SAFARI, TIME TRIAL, TEAM RECOVERIES, CHALLENGE EVENTS	NO (unless timed to less than one minute)	NO (unless timed to less than one minute)	NO (unless timed to less than one minute)	NO (unless timed to less than one minute)
HILL RALLIES	NO (unless timed to less than one minute)	NO (unless timed to less than one minute)	NO (unless timed to less than one minute)	NO (unless timed to less than one minute)
CLUBCROSS	NO			
AUTOCROSS	NO	NO		
HILL CLIMBS/ SPRINTS		YES	YES	YES
DRAG RACE		YES	YES	YES
RALLYCROSS		YES	YES	YES
STAGE RALLY		YES	YES	YES
KART RACE	YES (unless lap scoring only)	YES (unless lap scoring only)	YES (unless lap scoring only)	YES (unless lap scoring only)
CIRCUIT RACE		YES	YES	YES

18: CHART OF MINIMUM ACCEPTABLE CLERK OF THE COURSE LICENCE REQUIRED

MOTOR SPORT DISCIPLINE	EVENT STATUS			
	CLUBMAN	INTERCLUB	NATIONAL	INTERNATIONAL
SAFARI HILL RALLY	N/A	N/A	CROSS COUNTRY National or International	CROSS COUNTRY International
HILL CLIMB SPRINTS DRAG	N/A	SPEED National or International	SPEED National or International	SPEED International
RALLYCROSS	N/A	RALLYCROSS National or International	RALLYCROSS National or International	RALLYCROSS International (1)
STAGE RALLY (Multi-Venue)	N/A	STAGE RALLY National or International	STAGE RALLY National or International	STAGE RALLY International
STAGE RALLY (Single-Venue)	N/A	STAGE RALLY National (SVSR Only) (3)	STAGE RALLY National (SVSR Only) (3)	STAGE RALLY International
RACE	N/A	RACE National or International	RACE National or International	RACE International
KART	KART National or International	KART National or International	KART National or International	KART International
KART ENDURANCE	KART Endurance (2)	KART Endurance (2)		

(1) A higher grade licence is valid for lower permit events of the same discipline.
(2) Only a KART Endurance Clerk may take charge of a Kart Endurance event.
(3) The unrestricted National or the International Stage Rally Clerk of the Course licence is also valid.

28: CHART OF TECHNICAL OFFICIALS

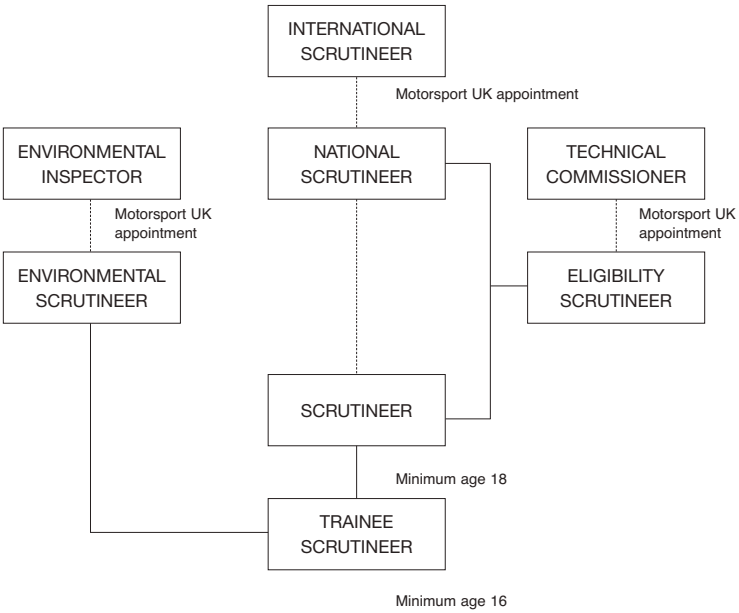

29: MOTORSPORT UK TIMEKEEPER GRADING STRUCTURE

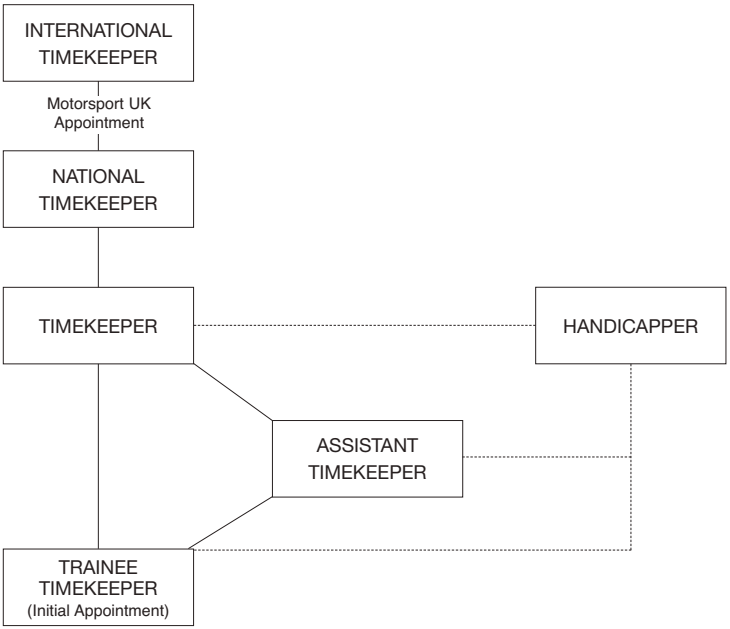

29.12: CHART OF TIMING EQUIPMENT CLASSIFICATION

Timing Equipment is classified as follows:

Equipment class	*Description*	*Suitable for*	*Certifying laboratory*
G/A	Vehicular actuated apparatus incorporating print-out. Issue times to 0.001 sec	Race/Karting	National observatory or NAMAS certified laboratory
G/A D/A	Vehicular acuated apparatus incorporating print-out. Issue times to 0.01 sec	Any event	As G/A
D	Vehicular actuated digital display. Issue times to 0.01 sec	International speed events	As G/A
E/A	Vehicular actuated apparatus incorporating print-out. Issue times to 0.01 sec	All except FIA events	Motorsport UK
E/A (10)	Vehicular actuated apparatus incorporating print-out. Issue times to 0.01 sec	All below National	Motorsport UK
E/A (10 K)	Transponder actuated apparatus. Issue times to 0.01 sec	Race/Short circuit Karting	Motorsport UK
E	Vehicular actuated digital display. Issue times to 0.01 sec	National speed events	Motorsport UK
E/B *	Apparatus with multi-memory split and digital display. Issue times to 0.1 sec	National events	Motorsport UK
E/C	Apparatus with split time function. Issue times to 0.1 sec	Clubman speed events	Motorsport UK
F	Vehicular actuated apparatus. Issue times to 0.1 sec	Clubman speed events	Motorsport UK
R	Time of day with split. Issue times to 1 sec	Rally timing	Motorsport UK
R (O/I)	Time of day with split. Issue times to 0.1 sec	Rally timing	Motorsport UK

*Some class E/B timers incorporate facilities to ensure that only those times coincident with the start of vehicle actuation are recorded to 0.01 sec. These may be used in conjunction with a class E/A printing clock to produce short interval times to 0.01 sec accuracy (Latching System). The time interval is not to exceed 5 mins and in the event of any difference or dispute the E/A time is to be issued as the true time.

(H) Competitors: Licences

General

In conformity with A.2.2.1.1 – 2.2.1.4 all Licence Holders must comply with the Regulations in this Section, and in addition with the Specific Regulations for the individual type of event.

Liabilities (32)

1.1. All persons connected with the event, whether by taking part in it or acting in an official capacity, shall be deemed to be bound by the General Regulations and the Supplementary Regulations, and must comply with the Law in relation to motor vehicles.

1.2. Any breach of these or other valid Regulations appertaining to the event shall, whether or not a penalty

is specified, be subject to any or all of the penalties specified in these Regulations (C.2.1).

1.3. An Entrant shall bear the prime responsibility for the compliance with the Regulations by all persons connected with an entry. If an Entrant is not present at an event in person, his nominated driver, or if there is more than one driver, the first nominated driver, shall be deemed to be his agent and shall bear all the duties and responsibilities of the Entrant. (In addition please note the requirements of S.7.1.7 and U.14.1.5.)

1.4. Any misdemeanour of a driver acting as an agent shall not absolve the Entrant from responsibility and both driver and Entrant shall be liable to penalty.

1.5. Any driver who is not acting as an Entrant's agent or any other person carried in or assisting with a competing car during an event shall not be absolved from his own responsibility under the relevant Regulations because of the responsibilities assumed by the Entrant or his agent.

1.6. Any person in possession of an official badge or other means of identification issued by the organiser shall be deemed to be assisting the Entrant to which the means of identification concerned has been issued.

1.7. These Regulations and any of the Appendices thereto may be amended or added to by means of announcements published in an official Motorsport UK Bulletin.

1.8. No interpretation or clarification of any Regulation will be valid unless in writing or in an official document.

Introduction

2.1. Motorsport UK has been empowered by the Federation Internationale De L'Automobile (FIA) to register and licence British citizens wishing to compete nationally under Motorsport UK's Motor Sports Regulations and/or internationally under the FIA's International Sporting Code. Under certain circumstances citizens of other countries may also apply for registration. Registration will be effected by the issue of a Competition Licence of a type applicable to the motor sports discipline and the status, National or International, in which the applicant wishes to compete. Subject to certain conditions a status of licence may be upgraded at any time during the year. Registration shall expire at the end of the year shown on the Competition Licence. Any person from 6 years of age wishing to register must complete a Competition Licence application form. All applicants will be required to complete a medical self declaration. Applicants applying for a Car, Truck or Long Circuit Kart Racing, and all International grades of licence will be required to pass a medical examination (10). The following regulations contain all terms and conditions of registration and licence issue.

Competitor Registration

3.1.1. Registration will be effected by the issuing of a Competition Licence by Motorsport UK. Such issue shall be conditional upon the applicant's credentials satisfying Motorsport UK. At all times Motorsport UK reserves the right to refuse to issue a Competition Licence. The reason(s) for any such refusal shall be stated.

3.1.2. Any Competition Licence issued will remain the property of Motorsport UK which reserves the right to withdraw or suspend at any time. The reason(s) for any such withdrawal or suspension shall be stated. A Licence so suspended shall be surrendered to Motorsport UK forthwith on demand (A.2.2.1.1 – 2.2.1.4).

3.1.3. A Competition Licence granted by Motorsport UK does not constitute a certificate of the competency of the holder.

3.1.4. Competition Licence – Period and Validity

- Unless otherwise rendered invalid, all licences, for the purposes of acquaintance and submission to these rules, run from the 1st January to the end of the calendar year shown on the licence.
- To be valid, a Competition Licence must be signed in ink and, except for an Entrant's Licence issued in the name of a firm or organisation, must bear a passport type photograph of the holder, being a current likeness.

Competition Licence – Types

3.2. The types of licence available are Race, Kart, RS and RS – Stage Rally and Entrant.

Competition Licence – Grades

3.3. The grade of licences available are (highest first) International, National, Interclub and Clubman.

Assumed Name

4. If registration and a licence is requested under an assumed name or a pseudonym, special application should be made at the time of applying for registration. Motorsport UK may, if it thinks fit, issue a licence in such a name. Any assumed name must not be likely to deceive or offend. A person granted a licence in an assumed name shall not take part in any competition except under the name shown on such licence.

Note: Throughout these sections an asterisk(*) indicates a requirement for additional information to be printed in the Supplementary Regulations (SRs). Text shown in Italics indicate a Regulation which may be amended in the SRs. Text shown in red indicates a new or amended regulation for 2022.

Address and Nationality

5. Motorsport UK shall be entitled to register and issue licences to:

- A British citizen, including a citizen of any part of the territory of Motorsport UK.
- A citizen of any other country represented on the FIA providing they can provide proof to their parent ASN that they are permanently resident within the UK and that their ASN has given its prior permission and has recovered any licence originally issued. ASN authorisation is required for each licensing year.

Acts Prejudicial to Motor Sport

6. A competition licence holder who does anything to bring motor sport into disrepute or commits an act prejudicial to the interest of motor sport generally may face disciplinary action (C.1.1.4 and H3.1.2). A Licence so suspended shall be surrendered to Motorsport UK forthwith on demand (A.2.2.1.1 – 2.2.1.4).

Minimum Ages

7. In all cases where the applicant is under 18 years of age it is necessary that the application is counter-signed by the Parent or Guardian. Proof of guardianship may be required.

- Please refer to Chart 7 Appendix 1 after this section to assess eligibility.

7.1. A Competitor shall not take time off school to participate in motorsport without the prior written approval of their school.

How to Apply for a Competition Licence

8.1. With the exception of first time applicants for a Race, Kart or Stage Rally licence all applicants should read these notes and complete an Application for Competition Licence Form provided by Motorsport UK. Any changes to the wording on the official form will make it null and void. After having completed all the relevant sections of the application form, an applicant must send it, with the appropriate fee and a passport type photograph to Motorsport UK. Motorsport UK will use its best endeavours to process and deliver the licence to the applicant within 15 working days of receipt of the application by Motorsport UK. Processing may take longer if we have to check the applicant's health. Therefore, you are recommended to allow for this time before the first event for which the licence is required. Applicants with no health or other problems appertaining to their application may, on payment of an Express Handling Fee, apply for priority handling and Motorsport UK will issue their licences within 3 working days. For applicants paying the additional Express Handling fee arrangements may be made, upon request, to confirm to organisers that they are a licence holder, this will usually include the waiver of the non-production of a licence fee (22.1). To speed the process please clearly mark the envelope 'EXPRESS' and this should preferably be sent by Recorded Delivery.

If an applicant doesn't receive the licence, after allowing for the processing and delivery time, Motorsport UK should be notified in writing. If the notice is received by Motorsport UK within 6 weeks of despatch of the licence by Motorsport UK, it will issue a duplicate.

After 6 weeks have elapsed, the normal duplicate licence charge will be levied in accordance with Part 3, Appendix 1.

Race Licences

8.2.1. A competitor making an application for the first time for a Race licence must obtain a novice race driver 'Go Racing Driver Pack', which contains the required application form, from Motorsport UK and then complete an approved course at a school registered with the Association of Racing Drivers' School (ARDS). The procedure to be followed is contained in the 'Pack'.

Competitors who have reached their 14th Birthday may apply for a Race Club Licence to allow them to race only in Junior Race Formulae specifically authorised by Motorsport UK. The Licence application must be endorsed and submitted to Motorsport UK by a Junior Race Championship Organising Club. This Licence will state 'Junior Race Formulae Only' and will be held by the Championship Organising Club(s).

Exemptions from 8.2.1. are as follows:

8.2.2. Anyone who has held a Race National B or Interclub licence at any time during 2019, 2020 or 2021. Competitors who have not renewed or held a Race National B or Interclub licence since 2018 must comply with the requirement for first time applicants detailed above.

8.2.3. *Anyone who can provide proof of having ever held, or entitled to hold, a Race licence of higher status than Restricted, National 'B' or Interclub. Competitors who have not renewed their licence for five years or more will be required to pass the ARDS written examination.

8.2.4. *Anyone who has held a Competition Licence during 2020 or 2021 and can produce written proof of having been classified as a finisher in at least eight Rallycross, or five Time Attack Hot Lap Challenge events during that time and who passes a written examination.

8.2.5. *Anyone who is entitled to an International 'ITE' Kart licence and who passes a written examination.**

8.2.6. *Anyone who, being a foreign national, can produce proof from their ASN that they have the necessary racing experience.

8.2.7. *Anyone, during the year of their 16th birthday, who is entitled to a Kart International 'B' licence, (or is otherwise approved by Motorsport UK) and who passes a written examination. The Race Club licence will be issued to the Race Organising Club. The use of this licence will be restricted to specifically authorised Race Championships and will be held by the Club until the competitor reaches their 16th birthday.**

8.2.8. *A Race National licence may be applied for by:

(a) a holder of an International Competition Licence issued by the Auto Cycle Union and providing that proof is produced of competing in International motor cycle racing during the preceding five years

(b) the holder of a Kart International 'A' or 'B' licence, subject to passing the ARDS written examination.**

* As the written examination is based on the Competitors' Yearbook and other information contained in the 'Go Racing Driver Pack', it is recommended that the pack is purchased in these exemption categories.

** For those applicants who have no competition car driving experience or who do not hold a road driving licence no exemption from the ARDS course is permitted. Proof of competition car driving experience will be required to accompany your application for a Car Racing licence.

Kart Licences

8.3. A competitor making an application for the first time for a Kart (not Kart Clubman) licence must obtain a novice kart driver 'Starting Karting Pack', which contains the required application form, from Motorsport UK and then complete an approved course at a school registered with the Association of Racing Kart School (ARKS). The procedure to be followed is contained in the 'Pack'. Exemptions are as follows:

8.3.1. Anyone who has held a Kart National 'B' licence at any time during 2019, 2020 or 2021. Competitors who have not renewed or held a National 'B' licence since 2018 or earlier must comply with the requirement for first time applicants detailed above.

8.3.2. *Anyone who can provide proof of having ever held, or entitled to hold, a Kart or Race licence of higher status than Restricted, National 'B' or Interclub. Competitors who have not renewed their licence for 5 years or more will be required to pass the ARKS written examination.

8.3.3. Anyone who can provide proof of having ever held a Kart Clubman or KX licence and can produce written proof of having been classified as a finisher in at least 6 Kart Endurance, Kart Tyro/Clubman or KX races, held under the jurisdiction of Motorsport UK, during 2019, 2020 or 2021.

- (The 'Starting Karting Pack' is required in this instance and the driver will be required to pass the ARKS written examination.)

8.3.4. Anyone who can provide proof of holding a National Schools Karting Association (NatSKA) National licence during 2019, 2020 or 2021.

8.3.5. *Anyone who can provide proof of having satisfactorily completed eight qualifying kart races (as approved by Motorsport UK), a minimum of four of which must be outdoor races.

- (The 'Starting Karting Pack' is required in this instance and the driver will be required to pass the ARKS written examination.)

8.3.6. Anyone who, being a foreign national, can produce proof from their ASN that they have the necessary Karting experience.

8.3.7. A Kart National licence may be applied for by a holder of a National Competition Licence issued by the Auto Cycle Union providing that proof is produced of competing in National motorcycle racing during the preceding three years. This is also subject to passing the ARKS written examination.

*As the written examination is based on the Yearbook and other information contained in the 'Starting Karting Pack', it is recommended that the pack is purchased in these exemption categories.

Stage Rally Licence

8.4.1. A competitor making an application for the first time for an RS Stage Rally licence must obtain a novice stage rally 'Go Rallying Pack', which contains the required application form, from Motorsport UK and then complete an approved course at a school registered with the British Association of Rally Schools (BARS). The procedure to be followed is contained in the 'Pack'. Exemptions are as follows:

8.4.2. Anyone who has ever held a Non-Race National 'B' licence or higher, or equivalent, valid for driving on Special Stage Rallies held before 31 December 2001.

8.4.3. Anyone who has ever held a Restricted or National Rally licence.

8.4.4. Anyone who, being a foreign national, can produce proof from their ASN that they have held a licence valid for driving on Special Stage Rallies or Hill Rallies.

8.4.5. The RS National Navigator Licence is not valid as a driver's licence at any grade of event.

Medical Declarations and Records

9.1. Medical Declaration – All Applicants

There are certain medical conditions as detailed in 10.1.9, which are incompatible with the practise of motor sports at any status of event. All applicants are required to complete an annual medical self declaration as to their medical fitness to compete in motor sports competition. If an applicant has not had a recent medical examination and eyesight test or they do not understand any part of the medical requirements set out hereunder they are strongly recommended to have an examination or eye test other than as provided for in 10.1.11. At all times any decision as to fitness or unfitness to compete shall ultimately reside entirely with Motorsport UK.

9.2. Access to Records

Access to Medical Reports Act 1988/Access to Personal Files and Medical Reports (Northern Ireland) Order 1991 ("the Acts")/Access to Health Records and Reports Act 1993 (Isle of Man).

Before we can apply for a medical report from a doctor who has cared for you, we need your consent by signing the Declaration in Section 5 of the application. Before doing so, however, you should read this notice carefully, as it sets out your rights under the Acts and the procedures for dealing with reports.

9.2.1. You do not have to give your consent but, if you do, you can say whether you wish to see the report before it is sent to Motorsport UK's Medical Consultant. If you do not give consent, we will be unable to proceed with your application for a Competition Licence.

9.2.2. If you say you wish to see the report, we will write to your doctor and advise you that we have done so, and we will tell your doctor you wish to see the report. You will then have 21 days to contact the doctor about arrangements for you to see the report. Of course, the quicker you act, the quicker your application for a Competition Licence can be considered.

9.2.3. If you say you do not wish to see the report, we do not have to notify you if we apply for one. However, if before such a report is sent to us, you write to the doctor saying you wish to see it, you will then have 21 days to contact the doctor about arrangements for you to see the report.

9.2.4. Whether or not you say you wish to see the report before it is sent to us, the doctor must let you see a copy for up to six months after it is supplied, if you ask.

9.2.5. If you ask the doctor for a copy of the report, he can charge you a reasonable fee to cover his costs.

9.2.6. If you see a report before it is sent to us, the doctor cannot submit it until he has your consent. You can write to the doctor, asking him to amend any part of the report which you consider to be incorrect or misleading, and have attached to the report a statement of your views on any part where you and the doctor are not in agreement.

9.2.7. The doctor is not obliged to let you see any part of a report if, in his opinion, that would be likely to cause serious harm to your physical or mental health or that of others, or would indicate the doctor's intentions towards you, or if disclosure would be likely to reveal information relating to, or the identity of someone else who has supplied information about you, unless that person has consented or the information relates to, or has been supplied by, a health professional involved in caring for you. In such cases, the doctor must notify you and you will be limited to seeing any remaining part of the report. If it is the whole report, which is affected, he must not send it to us unless you give your consent.

Medical Declaration – Car, Truck or Long Circuit Kart Racing and all International Licence Applicants

10.1.1. An applicant 60 years of age or over applying for a Car, Truck, or Long Circuit Kart Racing Competition Licence must pass a Medical Examination by their General Practitioner (GP). Thereafter they will be required to complete an annual medical self declaration until the age of 65. Applicants 65 years of age and over must undergo and pass a medical examination in their 65th year and at the following intervals, their 70th, 72nd and 74th years and there after annually. The Competition Licence must be issued within 3 months of the date of the medical after which time the report will need to be revalidated by the examining GP. For International licence requirements for those 45 years and over, refer to 11.

10.1.2. All applicants for an International Competition Licence must pass a Medical Examination by their GP every year. International Competition Licences incorporate a FIA Medical Certificate of Aptitude, and every 2 years for applicants under 45 a 12-lead electrocardiogram. For an International Rally both driver and co-driver of the car are required by the FIA to hold a full International Rally Driver's licence.

10.1.3. No Car, Truck, Long Circuit Kart Racing or International licence will be issued until the Medical Examination Report, if required, has been completed, endorsed and signed by the applicant's GP.

10.1.4. In the event of any uncertainty as to whether or not the applicant satisfies the Medical requirements, the examination form should be signed by the GP and should then be sent directly to Motorsport UK's Medical Section Administrator, with any additional information which may be of assistance.

10.1.5. Any fee charged for the medical examination is the responsibility of the applicant. This also applies to any additional reports and Specialist examinations requested by Motorsport UK in connection with an application for a Competition Licence.

10.1.6. The medical examination should be carried out to a standard similar to that required for Life Insurance but with specific attention to the following:

10.1.7. Diabetics requiring treatment with insulin will not normally be issued with a licence valid for Racing, Karting, Kart Clubman, Rallycross, Stage Rallying or International Rallying. In certain circumstances the Medical Consultant at Motorsport UK will be prepared to consider applications in writing by Insulin controlled Diabetics. Each applicant would need to present themself to a Diabetics Specialist recommended by Motorsport UK and any costs incurred would be borne by the applicant.

10.1.8. Epilepsy is incompatible with fitness to Race, Kart, Kart Endurance, Kart Tyro, Kart Bambino, Rallycross or Stage Rally. If a person with epilepsy has not had a seizure or medication to prevent or control fits for a period of ten years they may present that case to Motorsport UK's Medical Consultant for consideration. For other events a person with epilepsy may be considered for a competition licence providing they can show that they have not had a fit for five years whether on or off medication.

10.1.9. The following medical conditions may prevent the granting of a Competition Licence:

(a) Myocardial infarction.

(b) Myocardial ischaemia.

(c) Coronary artery by-pass surgery.

(d) Coronary Angioplasty.

(e) Valvular Disease of the Heart or other abnormal condition whether operated on or not.

(f) Severe hypertension which has given rise to cardiopulmonary problems.

(g) Any mental or behavioural disorders*, past or present whether or not under treatment with drugs or therapy.

(h) Epilepsy, seizures or any other neurological conditions.

*As defined in ICD.10 (International Classification of Diseases).

10.1.10. The following eyesight standards are required to be met by applicants for a national licence.

Applicants for International Licences please refer to FIA Standards, www.fia.com (Appendix L).

(a) Minimum corrected visual acuity must be 6/6 with both eyes open.

(b) Minimum binocular field should measure at least 120 degrees along the horizontal meridian with no defects within the central 20 degrees.

(c) Spectacles should be fitted with shatterproof lenses. Contact lenses if worn should be certified as satisfactory for motor sport by the ophthalmic specialist who supplied them.

(d) A person who suddenly loses sight in one eye will not be allowed to hold a licence until five years has lapsed.

(e) Double vision is not compatible with the issue of a Competition Licence.

(f) Normal colour vision; method of analysis used should be a pass of the Ishihara test (24 plate version) with the first 15 plates, presented in random order, being identified without error. In the case of any anomaly, recourse is to the Farnsworth test "Panel D15" or to an analogous system as approved by Motorsport UK. In any event, as well as passing such tests as referred to above, there must be no risk of any errors in the perception of the colours of flags or any light boxes (LED or otherwise) used in competitions.

10.1.11. Race, Truck and Long Circuit Kart.

(a) For Race, Truck and Long Circuit Kart first time applicants a vision test to include a test for colour blindness is required to 10.1.10.

(b) Applicants renewing from the age of 45 years and over are required to complete a vision test every 3 years (10.1.10.a and b).

General

10.2.

(a) It is strongly recommended that all competitors should be immunised against tetanus.

(b) It is recommended that asthmatics should wear an identity tag (i.e. bracelet or necklace) declaring that they are asthmatic and that they should inform the event's Chief Medical Officer of their condition before competing.

(c) It is strongly recommended that an annual eyesight test is taken other than as provided for in 10.1.11.

(d) The mouth should be kept clear of anything likely to cause a blockage of the airway in the event of an incident. It is advisable to remove false dentures and to refrain from chewing gum.

(e) Competitors are advised to refrain from wearing jewellery which, in the event of an incident, could prove hazardous.

(f) The Motorsport UK reference, as the minimum benchmark for licence requirements, is the regulations laid down by the DVLA in relation to Group 2 Driving Licences.

Medical Declaration – International Licence Applicants – 45 and over

11.1.1. In addition to the requirements of 9 and 10 above, the following are required for International Licence Applicants 45 years of age and over.

11.1.2. A current written report of a stress related Electrocardiogram is required for all International licence applicants 45 years of age and over. A stress related ECG will be valid for two years and will need to be subsequently undertaken in respect of the licence application in the third year. (Do not send Trace.)

11.1.3. The stress electrocardiogram shall be carried out to a symptom limitation on a motorised treadmill to a standard Bruce Protocol; an equivalent bicycle ergometric protocol is acceptable. Recording is to be made in 12 leads, at rest, following hyperventilation, and for each minute of exercise and each of ten minutes of recovery. Reason for cessation to be stated; report submitted must be by a specialist accredited in cardiology and signed by a consultant cardiologist.

Medical Declaration – Disabled Drivers

12.1.1. Any applicant with a congenital abnormality of any limb, or amputation or with any other disability should first contact Motorsport UK's Medical Section Administrator at Motorsport UK House who will be pleased to advise and help the applicant.

12.1.2. In addition to the requirements of 9, 10 and 11 above, disabled applicants should note the following:

12.1.3. The following medical conditions may prevent the granting of a Competition Licence:

(a) Paraplegia

(b) Hemiplegia

(c) Quadriplegia

(d) Loss of limb.

12.1.4. When applying for a Competition Licence all applicants are required to declare any physical disability.

12.1.5. Disabled drivers may be required to present themselves for examination by Motorsport UK's Medical Consultant. If required to attend such examination the applicant will be required to provide, in advance, a note from his/her GP describing the applicant's disability and, if applicable, an opinion from any specialist who has been consulted.

12.1.6. Any driver or co-driver/navigator who has any medical condition or disability or who is currently on anti-coagulant therapy should declare this at the time of entering. Such information to be solely for the use of the Chief of medical services in the event of an accident.

12.1.7. Those competing in accordance with 12.1.4 in an activity where competition numbers as defined in J.4.1 or in U.17.25-17.28 should display the FIA Non-Ambulant Logo (as supplied by Motorsport UK) on both sides of the vehicle adjacent to the side numbers to alert marshals in the case of an incident. (Drawing 12.1.7.)

12.1.8. Competitors in all disciplines must be able to evacuate the cockpit in a maximum of 10 seconds whilst complying with the conditions as prescribed in J.5.19.2.

12.1.9. Postal applicants for an RS Clubmans Licence who answer yes to either of the following questions:

- Do you have any serious medical condition which affects your ability to drive and control a car?
- Are you epileptic or do you suffer from any fits, fainting spells or blackouts or take any medication to control this?

may be issued with a Competition Licence endorsed NonDriver to allow participation as a passenger or navigator.

12.1.10. For events other than those Cross Country events included within P25.1. passengers applying for an RS Clubmans Licence on the day who answer yes to either of the following:

- Do you have any serious medical condition which affects your ability to drive and control a car?
- Are you epileptic or do you suffer from any fits, fainting spells or blackouts or take any medication to control this?

may participate on the day, subject to 12.1.8. as a passenger or navigator and may be issued with their Competition Licence endorsed Non-Driver.

Upgrading, Downgrading and Retention of Licence

Retention and Downgrading

13.1.1. An applicant may retain his or her licence if they meet the criteria set out below. If an applicant for whatever reason does not qualify to retain their current licence grade they will be automatically downgraded according to these regulations.

13.1.2. Upon renewal an applicant may voluntarily take out a licence of lesser grade than that to which they are entitled.

13.1.3. Upon receipt of a written request, an existing licence holder who wishes to exchange their licence for one of lesser grade may do so but only once during the year.

13.1.4. The charge for so doing will be the payment of the downgrade fee as per Part 3, Appendix 1 and forfeit of the cost difference (if any) between the two licences. Any subsequent upgrade will be charged in accordance with Part 3, Appendix 1.

13.1.5. In order to comply with FIA Appendix L the following definitions apply in respect of international licence upgrade qualification:

13.1.5.1. Circuit Competitions: Refers to competitions or cars on circuits (according to Appendix O, Art. 2): Karting, Single-Seaters, Prototypes, GT, Touring Cars, Autocross, Rallycross, Historic Circuit, Trucks and Drifting.

13.1.5.2. Road Competitions: Refers to competitions or cars on closed or open roads (Rally, Cross-Country, Hill Climb and Historic Rally).

13.1.5.3. For a licence qualification competition to be considered achieved, the driver must actively enter the competition and be classified in the Official Final Classification of the competition (list of results) (Heats are not eligible).

Upgrading Procedure

13.2.1. Competitors wishing to collect signatures for upgrading their competition licence must use the Upgrade Card. For the Upgrade Card to be valid it must be signed in ink and must bear a passport type photograph of the holder, which must be permanently fixed to the Upgrade Card in the space provided.

13.2.2. If you want to upgrade your licence on renewal and you have met the Upgrading criteria detailed in this section, please forward your completed 2021 Competition Licence Application Form together with the appropriate licences and/or Upgrade Card containing the signatures and the required payment to the Licence Section.

13.2.3. If you want to upgrade your licence and you are already in possession of a current 2022 Competition Licence, please complete the licence amendment card which can be found at www.motorsportuk.org within the competitor resource centre and forward it, together with your 2022 Competition Licence and any other appropriate licences and/or Upgrade Card containing the necessary signatures with the required payment to the Licence Section. The payment is calculated as the difference between the cost of the existing licence and the new licence plus the upgrading fee as detailed in Appendix 1. A request for an upgrading signature has to be made to the organisers, and if the results of the event show that the driver's performance was satisfactory, his/her Upgrade Card will be signed by the Clerk of the Course in the space provided. In the case of Kart Races, only the Motorsport UK Steward of the Meeting is empowered to sign and only one signature per meeting is permitted, (Kart Endurance, Kart Clubman or Bambino Kart signatures are not accepted to upgrade a Kart Race Licence). A maximum of two signatures may be obtained at a car race or Long Circuit Kart meeting. In exceptional circumstances only, documentary evidence, such as printed official results sheets may be considered as proof of performance for upgrading. Results which predate the competitors last upgrade will only be accepted where the total number of results obtained is sufficient to meet the upgrade criteria from the basic competition licence for that discipline to that being sought.

Racing Licences

Racing – How to Retain a Licence

14.1.1. Note: A competitor who is unable to retain their Race licence as mentioned below may be required to pass a course at an Association of Racing Drivers' School. Exemptions to this requirement are as detailed in 8.2 of this section. Competitors qualified to retain a National 'A' or higher licence, who have not renewed their licence for five years or more will be required to pass the ARDS written examination.

14.1.2. A competitor who held a Race Club licence in any one of the years 2019, 2020 or 2021 may renew it for a 2022 Race Club licence.

14.1.3. A competitor who can provide proof of having ever held a 'H1' Historic Race International licence, Race National or National 'A' licence may renew it for either a 2022 Race Club, Race National or Race International 'ITD-C' licence.

14.1.4. A competitor who can provide proof of ever having held a Race International 'C' licence may renew it for a 2022 Race International 'ITC-C' licence, Race International 'ITD-C', Race National or Race Club licence.

14.1.5. A competitor who can provide proof of ever having held a Race International 'A' or 'B' licence may renew it for a 2022 Race International 'ITC-C', Race International 'ITD-C', Race National or Race Club licence. Special arrangements exist for retaining an International 'ITA' or 'ITB' licence and are contained in Appendix L of the FIA International Sporting Code.

14.1.6. Deleted.

Racing – How to Upgrade a Licence

14.2.1. Please note that Rallycross signatures are NOT acceptable for upgrading any Race licence.

14.2.2. *Race Club to Race National*
A competitor who is qualified to hold a 2022 Race Club licence may upgrade it to Race National licence either at renewal or during the year as follows:

(i) Obtain Clerk of the Course's signatures on the Upgrade Card certifying that the qualifying events have been successfully completed. These are 6 Interclub Races (including Junior Race signatures) and must not contain more than 1 signature from Races organised by or on behalf of Racing Schools which form part of a school course or curriculum.

(ii) One of the Clerk of the Course signatures required for having successfully completed a Race may be replaced by a Clerk of the Course signature recorded on the Upgrade Card for completing a day on a marshal's post during a race meeting.

14.2.3. One of the Clerk of the Course signatures for having successfully completed a Race may be replaced with a signature recorded on the Upgrade Card for having successfully completed an ARDS Advanced Course.

14.2.3.1. Exceptionally, and for drivers having first satisfactorily completed an ARDS Advanced Course, these races may be part of a National status Championship, designated specifically by Motorsport UK for this purpose, and in which the candidate may participate with a Race Club licence for one season only.

14.2.4. *Race National to Race International 'ITD-C'*. A competitor who is qualified to hold a 2022 National Race licence may upgrade it to Race International 'ITD-C' licence either at renewal or during the year, without any further qualification.

14.2.5. *Upgrade to Race International 'ITC-C":*

14.2.5.1. A competitor who is qualified to hold a 2022 Race National licence may upgrade it to Race International 'ITC-C' licence either at renewal or during the year having satisfactorily competed in at least 10 events (irrespective of discipline) at least 5 of which must be circuit competitions within two years prior to application.

14.2.5.2. A competitor who is qualified to hold a 2022 International 'ITD-C' licence may upgrade it to Race International 'ITC-C' licence either at renewal or during the year having satisfactorily competed in at least 5 circuit competitions within two years prior to application.

14.2.5.3. A competitor who is qualified to hold a 2022 Kart International 'ITE' may upgrade it to Race International 'ITC-C' having satisfied 8.2.5. and competed satisfactorily in at least 10 circuit competitions within two years prior to application.

14.2.6. *Race International 'ITC-C' to Race International 'ITB'.* A competitor who is qualified to hold a 2022 Race International 'ITC-C' licence may upgrade it to Race International 'ITB' licence either at renewal or during the year in accordance with Appendix L of the FIA International Sporting Code.

14.2.7. *Race International 'ITB' to Race International 'ITA'.* In accordance with Appendix L of the FIA International Sporting Code.

14.2.8. First time applicants for an International licence must have undertaken the FIA e-learning safety training.

14.2.9. Deleted.

14.2.10. Deleted.

Karting to Race National

14.2.11. Deleted.

Stage Rally Licences

Rallying – How to Retain a Licence

15.1.1. Note: A competitor who is unable to retain their RS Stage Rally licence as detailed below may be required to pass a course at a British Association of Rally Schools (BARS). Exemptions to this requirement are detailed in 8.4. of this Section.

15.1.2. A competitor who can provide proof of having ever held a National or National 'A' Rally licence may renew it for a 2022 RS National Stage Rally or International 'ITD-R' Rally.

15.1.3. A competitor who can provide proof of having ever held an International Rally licence may renew it for a 2022 International 'ITC-R' Rally licence.

15.1.4. A competitor who can provide proof of having ever held an International Historic Rally licence may renew it for a 2022 Rally International 'ITD-R or an RS National Stage Rally licence.

Rallying – How to Upgrade a Licence

15.2.1. Please note that Speed, Rallycross or Cross Country signatures are NOT acceptable for upgrading any RS Interclub Stage Rally or National Stage Rally licence.

RS Interclub - Stage Rally to RS National - Stage Rally

15.2.2. A competitor who is qualified to hold a 2022 RS Interclub - Stage Rally licence may upgrade it to an RS National Stage Rally licence either at renewal or during the year by obtaining Clerk of the Course signatures on the Upgrade Card certifying that six rallies of which at least three are Special Stage Rally events have been completed.

15.2.3. One of the Clerk of the Course signatures for having successfully completed a Stage Rally may be replaced with a signature for having successfully completed a BARS Advanced Course.

RS National Stage Rally to Rally International 'ITD-R'

15.2.4. A competitor who is qualified to hold a 2022 RS National Stage Rally licence may upgrade it to a Rally International 'ITD-R licence either at renewal or during the year or being entitled to hold the Kart International 'ITE' licence without further qualification and having satisfactorily passed the BARS test.

15.2.5. *Upgrade to Rally International 'ITC-R'*

15.2.5.1. A competitor who is qualified to hold a 2022 RS National Stage Rally licence may upgrade it to an International 'ITC-R' licence either at renewal or during the year having satisfactorily competed in at least ten competitions a minimum five of which must be Road Competitions within the two years prior to application.

15.2.5.2. A competitor who is qualified to hold a 2022 Rally International 'ITD-R' may upgrade it to an International 'ITC-R' licence either at renewal or during the year having competed in at least five Road Competitions within the two years prior to application.

RS Interclub or equivalent to RS Interclub – Stage Rally and above

15.2.6. Follow the procedure for applicants for a Stage Rally licence detailed in 8.4 and then proceed as in RS Interclub Stage Rally to RS National Stage Rally, RS National Stage Rally to Rally International 'ITD-R' or to Rally International 'ITC-R' above.

RS National Navigator to Rally International 'ITD-R' or to Rally International 'ITC-R'

15.2.7. Follow the procedure for applicants for a Stage Rally licence detailed in 8.4 and then proceed as in 15.2.6 above.

Adding an RS National Navigator

15.2.8. Competitors may add an RS National Navigator licence to an RS Clubmans or Inter-Club licence at time of renewal or during the year on payment of the fee as detailed in Appendix 1.

15.2.9. The RS Rally National Navigator Licence is not valid as a driver's licence at any grade of event.

15.2.10. First time applicants for an International licence must have undertaken the FIA e-learning safety training for roads.

Speed Licences

Deleted.

Rallycross Licences

Deleted.

RS Licence Retention

How to Retain a Licence

16.1.1. A competitor who has ever held a Speed International, Speed National, Speed National 'A', Speed National 'A' (OPEN) or RS National licence may renew it for the equivalent or a lower grade of licence in 2022.

16.1.2. A competitor who can provide proof of ever having held a National or National 'A' Rallycross licence may renew it for the same or lower grade of RS National licence in 2022.

16.1.3. A competitor who can provide proof of having ever held an International Rallycross licence may renew it for the same or lower grade of RS National licence or International 'ITC-C' Off-Road licence in 2022.

16.1.4. All other applicants can apply for an RS Interclub licence.

RS Licence Upgrade

How to Upgrade a Licence

17.1.1. A competitor who is qualified to hold a 2022 RS Interclub licence may upgrade it to an RS National licence either at renewal or during the year by obtaining Clerk of the Course signatures on the Upgrade Card certifying that;

(a) six Interclub Hill Climbs or Sprints have been completed. Signatures must have been obtained at a minimum of two different venues. (One of the six signatures required may be replaced by a signature from a MOTORSPORT UK Recognised Hillclimb and Sprint School confirming successful completion of the school course) OR Obtain the Clerk of the Course's signatures on the Upgrade Card at six Clubman or Interclub Autocross or Rallycross events.

(b) six Competitive Safaris or Hill Rallies have been completed.

(c) Or as provided for in 15.2.4.

Or any combination of the above.

RS Interclub to RS National (Drag) to International Drag 'IT DR'

17.1.2. To obtain a licence for Drag Racing higher than Interclub, a driver must submit with their application to upgrade, a letter of endorsement from a recognised Drag Racing Club. A system of licence endorsement for the category of vehicle being driven is in place. See Section 5. First time applicants for an International licence must have undertaken the FIA e-learning safety training.

RS National to Off Road International 'ITC-C'

17.1.3. A competitor who is entitled to hold a RS National may upgrade it to an Off Road International 'ITC-C' having satisfactorily competed in at least 10 events (irrespective of discipline) at least 5 of which must be circuit competitions within two years prior to application.

RS Interclub or International 'ITF' licence to Off Road International 'Junior ITE'. This licence is valid for FIA Specified Categories only

17.1.4. Drivers having reached their 14th birthday before 1st January of the year of participation may apply to be issued the Off-Road 'Junior ITE' licence subject to having competed satisfactorily in at least five competitions.

RS National to Cross Country International 'ITD-R'

17.1.5. A competitor who is qualified to hold a 2022 RS National licence may upgrade it to an International 'ITC-R' Cross Country licence either at renewal or during the year by obtaining Clerk of the Course signatures on the Upgrade Card certifying two Interclub Competitive Safaris or one National Competitive Safari have been completed.

17.1.6. First time applicants for an International licence must have undertaken the FIA e-learning safety training.

Truck Racing Licences

Truck Racing – How to Retain a Licence

18.1.1. Retention of a Truck Racing licence is exactly the same as for a Race licence. Please read 14.1.

Truck Racing – How to Upgrade a Licence

18.1.2. These are special licences and the National Truck Racing licence can be issued in one of the two following ways:

18.1.3. A competitor who is qualified to hold a Race National or Race International licence must satisfactorily complete an agreed instruction course in driving Heavy Goods Vehicles. OR

18.1.4. A competitor who already is the holder of a category C RTA licence must complete an ARDS racing course and take out a Truck Race National licence.

18.1.5. *Truck National to Truck International 'ITD-C'*
A competitor, who satisfies the requirements of 18.1.3 or 18.1.4, may apply for the Truck International 'ITC-C' having satisfactorily competed in at least 5 circuit competitions within the two years prior to application.

18.1.6. First time applicants for an International licence must have undertaken the FIA e-learning safety training.

Kart Licences

Kart – How to Retain a Licence

19.1.1. Note: A competitor who is unable to retain their Kart licence as detailed below may be required to pass a course at an Association of Registered Kart Schools (ARKS). Exemptions to this requirement are detailed in 8.3 of this Section. Competitors qualified to retain a National or higher licence, who have not renewed their licence for 5 years or more will be required to pass the ARKS written examination.

19.1.2. A competitor who held a National 'B' Kart licence during 2019, 2020 or 2021 may renew it in 2022.

19.1.3. A competitor who has ever held a kart National or National 'A' licence may renew it for the same or lower grade of licence in 2022.

19.1.4. A competitor who has ever held a Kart International 'C' licence may renew it for the same or lower grade of licence in 2022.

19.1.5. Special arrangements exist for retaining an International 'A' or 'B' licence and are contained in the CIK-FIA Annuaire.

Kart – How to Upgrade a Licence

19.2.1. Please note that Kart Endurance, Kart Clubman (with the exception of 19.2.2) or Bambino Kart signatures are NOT acceptable for upgrading any Kart Licence.

Kart Inter-club to Kart National

19.2.2. *Kart Interclub*

19.2.2.1. *Kart Inter-club (Valid Bambino Only) to Kart Interclub*

A competitor who holds an Interclub (Bambino Race) licence may exchange it for a Kart Interclub licence if qualified to enter Cadet (U15). They will be a novice until having satisfactorily completed five races.

19.2.2.2. *Kart Inter-club to Kart National*

A Competitor who is qualified to hold a Kart Interclub licence may upgrade it to a Kart National licence either at renewal or during the year as follows: Obtain the Motorsport UK Steward's signature on the Upgrade Card at six Clubman (prior to 31.12.2019) or Interclub Kart Races. One of these signatures may have been obtained at NatSKA or Kart Clubman meetings held under a Motorsport UK Permit. Completion of the ARKS Course (8.3) will constitute one of the six signatures. Signatures must have been obtained at a minimum of three different venues. For competitors in Long Circuit events only two different venues are required so long as the application is supported by a Long Circuit Karting organising Club. For upgrades containing both Short and Long Circuit signatures the minimum of three different venues is required. A competitor may only obtain one signature per meeting.

Race National to Kart National

19.2.3. A Competitor who is qualified to hold a Race National licence may apply for a Kart National licence either at renewal or during the year subject to the following:

Successful completion of the ARKS written test, in addition to having obtained the Motorsport UK Steward's signature on the Upgrade Card at one Short Circuit Interclub Kart Race.

Kart National to Kart International 'ITG', 'ITF' or 'ITE'

19.2.4. A competitor who is qualified to hold a National Kart licence may upgrade it to an International 'ITG', 'ITF' or 'ITE' licence either at renewal or during the year having completed at least five competitions as follows:

19.2.4.1. An International 'ITG' licence can be issued to drivers between 11 (reaching their 11th birthday before 1 January of the year of participation) and 14 (reaching their 14th birthday during the calendar year) when the Licence is issued (the drivers weight (including driver's equipment) must be a minimum of 35kg at all times during competition).

19.2.4.2. An International 'ITF' licence can be issued to drivers between 13 (reaching their 13th birthday before 1st January of the year of participation) and 15 (reaching their 15th birthday during the calendar year) when the Licence is issued (the drivers weight (including driver's equipment) must be a minimum of 40kg at all times during competition).

19.2.4.3. An International 'ITE' licence can be issued to drivers aged 14 (reaching their 14th birthday before 1 January).

Application must be made in accordance with the 2022 FIA Karting Regulations.

19.2.5. First time applicants for an International licence must have undertaken the FIA e-learning safety training.

19.2.6. Deleted.

Cross Country Licences

Deleted.

Competition Licence – Fees

20. See Part 3, Appendix 1, Competition Fees for details.

Competition Licence – Inspection

21.1.1. Licences must be produced for inspection at all events prior to a competitor taking part.

21.1.2. Competitors failing to produce a correct licence will pay a non-production fee as detailed in Part 3, Appendix 1 or may be disqualified from the event by the Stewards.

21.1.2.1. Exceptionally, for Karting, where both a Kart PG and the drivers licence, specific to a single entry, cannot be produced a single non-refundable fee will be payable.

21.1.3. Under no circumstances can this fee be considered as a substitute for holding a valid Competition Licence.

21.1.4. Only the originals of licences and Upgrade Cards are acceptable. Photocopies or facsimiled copies are not acceptable.

21.1.5. One Entrant's licence covers all the entries at a meeting in the name of that Entrant.

Competition Licence Restrictions

22.1.1. The following restrictions apply:

22.1.2. No person shall apply for or hold a current Entrant's and/or Driver's licence from more than one ASN (other than in 22.1.5. below) and such licences shall, if both are required, always be obtained from the same ASN.

22.1.3. No person may apply for or hold more than one current licence of the same category.

22.1.4. In special circumstances and, only once annually, the holder of a licence issued by Motorsport UK may apply to another ASN to issue them with a licence. This may only be granted if they are permanently resident in the territory of the ASN to whom they are applying, have surrendered their licence to, and obtained written permission from Motorsport UK.

22.1.5. A British citizen, having a licence issued in a foreign country which is not endorsed with the EU flag (27), will be able to take part in events within the territory of Motorsport UK, subject to also taking out a Motorsport UK Interclub or National Competition Licence.

Competition Licence – Holder's Indemnity and Undertaking

23.1.1. In consideration of Motorsport UK granting a Competition Licence, the holder binds himself to the following requirements and undertakings (A.2.6, A10 and D.13):

23.1.2. To abide by the Motorsport UK Regulations and any amendments or additions thereto which may be in force at any time that the licence is used for the purpose of taking part in a motor competition.

23.1.3. To pay as liquidated damages for any breach of these Regulations any sums awarded against him or the organisation which he represents within the maxima set out in the Regulations.

23.1.4. That to the best of the licence holder's knowledge and belief the driver(s) possess(es) the standard of competence necessary for an event of the type to which an entry relates and that the vehicle entered is suitable and road worthy for the event having regard to the course and the speeds which will be reached.

23.1.5. That where appropriate, the use of the car entered shall be covered by insurance as required by the law, which is valid for such part of the event as shall take place on roads as defined by the law.

23.1.6. That any competitor taking part in an event is suffering from any disability whether permanent, or temporary, which is likely to affect prejudicially his normal control of his vehicle at the time of the event, may not take part unless he has declared such disability to Motorsport UK which has, following such declaration given its written consent to the competitor to compete.

23.1.7. That any application form for a licence which is signed by a person under the age of 18 years shall be counter-signed by that person's Parent or Guardian. Proof of guardianship may be required.

23.1.8. Competitors should abstain from the consumption of alcohol or drugs before or during a competition.

23.1.9. The Parent/Guardian of a minor shall sign the following declaration: "I am the Parent/Guardian of the driver I understand that I shall have the right to be present during any procedure being carried out under the Supplementary Regulations issued for this event and the General Regulations of Motorsport UK. As the Parent/Guardian I confirm that I have acquainted myself and the minor with the Motorsport UK General Regulations, agree to pay any appropriate charges and fees pursuant to those Regulations (to include any appendices thereto) and hereby agree to be bound by those Regulations and submit myself without reserve to the consequences resulting from those Regulations (and any subsequent alteration thereof). Further, I agree to pay as liquidated damages any fines imposed upon me up to the maxima set out in Part 3, Appendix 1. (In addition please note that the above is subject to the requirements of S.7.1.7 and U.14.1.5.)

23.1.10. Where the Parent or Guardian is not present there must be a representative, who must produce a written and signed authorisation from the Parent/Guardian, to act as their representative.

National Schools Karting Association

24.1. Motorsport UK waives the requirement to hold a Competition Licence for competitors who hold a National licence issued by the National Schools Karting (NatSKA) in accordance with their rules which have been agreed with Motorsport UK.

Grades of Event and Licence Types and Grades

25.1.1. Competitors need a Competition Licence for most forms of motor sport organised under a permit issued by Motorsport UK. Select the status and type of event from the Chart 26; this shows the minimum acceptable licence.

25.1.2. Competitors must normally have registered and have their licence before competing in any event, but with the specific exception of Race, Long Circuit Kart Races* and Stage Rallies**, organisers are permitted to accept a properly completed RS Clubman, RS Interclub or Kart Application Form along with the appropriate fee in lieu of the licence.

25.1.3. *Competitors 59 years of age and under who have just completed their ARKS test may also produce their correctly completed application and payment in lieu of the licence (except for Long Circuit).

25.1.4. **Navigators at Interclub or lower status Stage Rallies may apply for an RS Interclub licence. This can, however, only be done once annually at events of Interclub or lower status. No priority fee is payable and the fee for non-production of licence is not applicable.

25.1.5. Licences issued by Motorsport Ireland will be deemed valid for all British events providing the holders comply with all the requirements for the event. Under a reciprocal agreement British licences are valid in Eire.

25.2.1. National Competition Licences issued by countries outside the UK will be deemed valid for British events, providing the following applies and competitors obtain approval from their own ASN:

(i) The event has been inscribed on the 2022 National Calendar and that the holders comply with all the requirements for the event.

OR

(ii) To ensure compatibility with our licence requirements, clubs should require foreign competitors to comply with the following:

(a) If the event is of Interclub or Clubman status, the competitor must be a member of, or join, the organising club or one of the invited clubs.

(b) At an Interclub Race meeting, the competitor must sign a declaration that he/she is competent to compete in the appropriate Race, and must satisfy the Clerk of the Course prior to practice that he/she is aware of the flag signals. The competitor should be subject to special observation during practice, and must achieve a lap time of at least 120% of the class best, unless the Clerk of the Course is satisfied as to extenuating circumstances. If he/she has not previously finished six Races, the competitor must carry a novice cross on the rear of the car (Q11.4.4).

(c) At a National Race meeting, the competitor must sign a declaration that he/she is competent to compete in that status of Race, and must satisfy the Clerk of the Course prior to practice that he/she is aware of the flag signals. The competitor should be subject to special observation during practice, and must achieve a lap time of at least 120% of the class best, unless the Clerk of the Course is aware of extenuating circumstances.

(d) At any International Race meeting the competitor must hold a valid International licence.

(e) Short Circuit Kart Racing. The competitor must carry 'Novice' number plates unless he/she can provide the organisers with proof of having finished in at least six Kart Races. Normal observation during practice.

(f) Long Circuit Kart Races. A declaration must be signed that the competitor has finished at least six Kart Races (long or short circuit). The competitor must carry 'Novice' number plates unless proof can be provided to the organisers of having finished at least four long circuit Kart Races. Special observation during practice.

(g) Interclub Rallies. The driver must hold a road licence valid within the UK. No other restrictions [see (k) regarding insurance].

(h) National Rallies. As (g) above, but the competitor must sign a declaration that he/she has competed in at least four rallies.

(i) Co-Drivers. No special requirements.

(j) All other events. For all other events which do not utilise the public highway, no special restrictions apply.

25.2.2. British licence holders of National or above grade will be entitled to compete in National events overseas providing the event has been inscribed on the ASN's 2022 Sporting Calendar, and comply with the requirements of the event. They will then be subject to the regulations of the appropriate ASN. These licences will incorporate automatic permission to take part in such events and contains the words "Authorisation to take part in National and International Competitions abroad in accordance with Articles 2.3.7 and 3.9.4 of the FIA ISC".

25.2.3. British licence holders of any International grade will be entitled to take part in events of the appropriate type on condition that those events are entered on the FIA International Calendar. Motorsport UK International licences incorporate automatic permission to take part in such events. In case of difficulty please contact Motorsport UK.

25.2.4. Concessions to holders of an International Historic licence may be available, please refer to the FIA International Sporting Code.

25.2.5. Non UK Race licence holders attending a Motorsport UK recognised competition driving school may take part in up to two national events organised by that school on the strict condition that they have the agreement of both their parent ASN and Motorsport UK. In such cases their original licence must be lodged with Motorsport UK who will then issue a suitable licence for the event, following receipt of a completed application. This licence will be exchanged for their original licence at the conclusion of the event(s).

Entrants

26.1.1. All personal licences entitle the holder to enter the car, truck or kart* in which he/she will personally take part in the event. Any other organisation, company, sponsor or person must obtain an ENTRANT'S LICENCE by making separate application by completing an Application for Competition Licence Form.

*(In addition, please note the above is subject to the specific regulations which apply to Drag Racing S.7.1.7 and Karting U.14.1.5.)

26.1.2. The Entrant is the legal entity who is responsible for all acts and/or omissions of the driver/co-driver and any Person connected with the entry. A Competitor must ensure that any Entrant is aware of this. Entrants must respect that Motorsport UK have the right to require alcohol and illicit drugs testing on any Person howsoever connected with any Entry operating within a Motorsport UK Permitted Event and shall at all times cooperate fully with the relevant procedures. These procedures are in addition to and not in substitution for any procedure undertaken by or at the instance of UK Anti-Doping (D.35.1.1.)

26.1.3. The maximum number of words permitted in an Entrant's title is six.

26.1.4. Only one Entrant's licence may be used in connection with an entry (i.e. two three-word licences cannot be used to make one entry).

26.1.5. An International Entrant's licence is valid for all events both inside and outside the UK.

26.1.6. A National Entrant's licence is valid for all events inside the UK excluding International, except in the case of events for Karts and Historic Cars, where it has the same validity as an International Entrant's licence.

Competitors who intend to use this licence internationally must advise Motorsport UK at the time of application.

26.1.7. *Where a competitor has not reached his 18th birthday the Entry for an event must be counter-signed by their Parent or Guardian. Such person will be considered as being the Minors' Entrant, and as such will be subject to these Regulations.

26.1.8. *The Parent or Guardian must attend the event with the Minor, and sign-on as his Entrant.

*(In addition please note the above is subject to the requirements of S.7.1.7 and U.14.1.5.)

26.1.9. A discipline may require the Parent or Guardian to be the holder of a PG Entrant's Licence. Where this is required the following will apply:

(a) A Competition Licence Application form must be countersigned by the Competitor's Parent or Guardian. The Competitor's Parent or Guardian must hold a PG Entrant's Licence.

(b) If the Parent or Guardian does not already hold such a licence, the PG Entrant's Licence Application must accompany the Competition Licence Application form when it is submitted to Motorsport UK.

(c) At an Event a Competitor must be accompanied by the holder of a PG Entrant's Licence who must sign on as the Entrant of that Competitor. When the holder of the PG Entrant's Licence is unable to be present (or has signed on but subsequently needs to transfer responsibility) they may appoint in writing an Entrant's Representative to act as their agent for all purposes under these Regulations.

However the holder of the PG Entrant's Licence will remain fully liable and responsible under the Regulations, as principal, as if they had accompanied the Competitor. The Entrant's Representative must be in possession of the PG Entrant's Licence (21.1.1). Note that an exemption in writing may be sought from Motorsport UK in advance of the relevant Event under A.2.4 should a PG Entrant's Licence be required to be produced at more than one Event on the same day.

(d) The Entrant (who signs on at the Event as the Entrant) of the Competitor will be responsible for the conduct of mechanics, helpers, team personnel and any other person associated with that Competitor.

(e) For National Events within the UK a "PG" Entrant's Licence will suffice. For International Events a Competitor must be accompanied by a Licensed Entrant whose licence must be valid for International Events (31).

(f) Should a PG Entrant's Licence be suspended at an Event, the holder may not participate further but the licence shall remain valid to the extent as provided for below. The holder of that PG Entrant's Licence may appoint an Entrant's Representative as in (c) above in order that the Competitor may continue to participate at that Event. That appointment shall continue to be effective as an Entrant's Representative to act on their behalf at subsequent Events in order to facilitate the Competitor's ongoing participation whilst the suspension of the PG Entrant's Licence remains in force but the PG Entrant's Licence holder is entitled to make substituted appointments pursuant to (c) at any time following the Event at which the PG Entrant's Licence was suspended. The PG Entrant's Licence holder may not attend subsequent Events in person whilst any suspension remains in force.

(g) Where an Entrant's Representative has been appointed, only the holder of the PG Entrant's Licence may appoint an alternative Entrant's Representative.

(h) Where a Parent/Guardian has formally appointed a representative, only that representative is entitled to be present in any judicial hearing – the Parent/Guardian having transferred their own entitlement.

(i) Where a Championship mandates that the holder of a PG Entrant's Licence must appoint an Entrant's Representative in the form of a Team Entrant's Licence holder, the Team Entrant's Licence holder will be subject to the provisions of (d) above but does not acquire authority under (f).

Advertising

27.1.1. During the period of validity of an event Permit there are no restrictions on advertising on vehicles in the UK except as follows:

27.1.2. The display must not be offensive.

27.1.3. No display should interfere with the easy identification of the vehicle's competition number.

27.1.4. No display on a transparent surface can exceed 13cm in depth.

27.1.5. Advertising is prohibited on road rallies except as provided for in R.18.6.1, R.18.6.6 and R.19.8.

27.1.6. Tobacco related advertising is prohibited on all competing vehicles, their support vehicles and any other form of equipment directly connected with an entrant or competitor. As an exception to this any car which can be proved by way of its history, through its chassis number via the FIA or Motorsport UK Historic Vehicle Identity Form (HVIF), to have run in a particular livery will be allowed to continue to display that livery in the same colours and original size of logos.

Event Advertising

28.1.1. The competitor must make available to the organiser a specified area of 645 sq cm on each side of the car, adjacent to the space allocated for the vehicle's competition number, and clearly visible, on which the organiser may specify the event, its sponsor or the course on which it is being run. Normally, this will be above or below the number background.

28.1.2. The competitor taking part in an event of a championship series must also make available a specified area of 645 sq cm on each side of the car on which the organiser may specify the championship and its sponsor (if that sponsor is different from the sponsor of the individual event) so long as the competitor is required to display only the title of the championship.

28.1.3. Failure to display the appropriate sticker may result in loss of Championship points.

Entries

29.1.1. Individual entries for an event must be made in writing on an appropriate entry form (D.4.3 and D.4.5) before the specified closing date of entries.

29.1.2. Acceptance of entries shall be at the discretion of the organisers, whether or not the number of entries submitted exceeds the maximum number to be accepted in the competition (D.14).

29.1.3. The organisers may at their discretion:

(a) Select entries as they wish.

(b) Refuse any entry. No event or championship organiser shall have the right to refuse an entry on unreasonable grounds and competitors may appeal to the MSC if they feel the grounds are unreasonable (C6.3.2, C6.3.3).

(c) Refund any entry fee or excuse a competitor payment of any entry fee.

(d)* Publicise in the SRs the method by which entries are to be selected.

(e)* Furthermore, the organisers may require accepted entries to comply with some specific conditions prior to being permitted to start, but only provided such a condition is stated in the SRs.

(f)* Abandon, cancel or postpone the competition or any class therein should insufficient entries be received, provided that a minimum number of entries is specified in the SRs.

(g) Amalgamate existing classes or create additional classes should the type and size of entry appear to warrant such action, provided that the intention so to act is notified in writing to all competitors affected, not later than the closing date for entries.

(h) Permit the nomination of drivers to be delayed up to the time of issuing the official list of competitors.

30.1.1. The organisers shall, within seven days of receipt of an entry, or within two days of the closing date for entries, whichever is the earlier, notify an entrant that his entry is:

(a) Accepted, or

(b) Refused, or

(c) Placed on a list of reserves and the position on that list, or

(d) Held in abeyance for further consideration.

(e) Furthermore, in the case of an entrant notified that his entry is classified under (d), he shall be notified within two days of the closing date of entries as to the final classification of his entry.

(f) An entrant shall be free to withdraw an entry to which 30.1.3(g), (c) or (d) relates provided the organisers are so informed in writing within three days of the entrant being notified.

(g) When an organiser is accepting entries up to one hour before a competition (as permitted by D.20), he must notify all accepted entries, not less than three days before the event, if there is any likelihood of the event being cancelled because of lack of entries.

30.1.2. Refund of Entry Fees. An entrant shall have the right of a refund of the entry fee only if:

(a) The event is cancelled, or postponed for more than 12 hours, unless the SRs have provided for a specified part to be retained towards administrative expenses.

(b) An otherwise eligible reserve entry is not permitted to take part in the event.

(c) An entry is withdrawn as provided by 30.1.1(f).

(d) An entry is refused.

(e) Provision is made in the SRs for full or partial refund to a competitor notifying the organisers IN WRITING prior to a specified date, that he wishes to withdraw his entry.

Entrants' Responsibilities (1, 26)

31.1.1. An entrant shall ensure that:

31.1.2. Only the nominated car is used throughout the event.

31.1.3. Only the nominated driver(s) drive that car.

31.1.4. Only nominated persons are carried in that car.

31.1.5. An entrant shall, before the event, satisfy himself as to the eligibility and safety of the vehicle and safety equipment and the competence of its driver.

31.1.6. An entrant shall furthermore ensure that a vehicle is maintained in an eligible and safe condition throughout the event or meeting.

31.1.7. The act of presenting a vehicle and safety equipment for official scrutiny shall be deemed a declaration of its fitness and eligibility for the event and an acceptance of the consequences of such a declaration not being valid.

31.1.8. Vehicles shall comply with Motorsport UK Technical Regulations and any appropriate Approved Formulae Regulations.

31.1.9. There shall be no requirement for eligibility of a vehicle additional to the preceding point unless such requirement is stated in the SRs.

31.1.10. The entrant shall be responsible for all acts or omissions on the part of his driver(s), mechanics, passengers, and all other persons assisting in any capacity in connection with his entry, but each of these shall also be responsible for any breach of the Regulations.

31.1.11. Notwithstanding the above, the driver of any vehicle disqualified as a result of the actions of his Entrant, Mechanic, engine or body builder, or any other person assisting in any capacity with his entry, may also be subject to any penalties associated with that exclusion.

31.2.1. Entrants and Drivers Forbidden to Abandon one Event and compete in another.

31.2.2. Any entrant having entered, or any driver having undertaken to drive in any event, who does not take part in that event and takes part in another event on the same day may thereby become liable to the penalty set out in Part 3, Appendix 1.

31.2.3. Provided also that a competitor who has been notified that his entry has been accepted conditionally or that a decision has been deferred may enter for another event on the same day on condition that if his entry for the second event is accepted he shall forthwith notify the first organising club.

31.2.4. Entrants must respect that Motorsport UK have the right to require alcohol and illicit drugs testing on any Person howsoever connected with any Entry operating within a Motorsport UK Permitted Event and shall at all times cooperate fully with the relevant procedures. These procedures are in addition to and not in substitution for any procedure undertaken by or at the instance of UK Anti-Doping (D.35.1.1.)

Competitors' Responsibilities

32.1.1. All Entrants, Drivers, Navigators and other passengers must 'sign-on' on a form prescribed by Motorsport UK and undertake to comply with the declarations laid down in D.13 and shall not be allowed to take part in the event until they have produced the necessary documents to prove their eligibility for the event, whether this be by means of an approved Club Membership Card and/or a Motorsport UK Competition Licence (or Licence application form completed as in 26.1). In addition to the foregoing if the vehicle is to be used on the Public Highway an appropriate current valid Road Traffic Act Licence will also be required.

32.1.2. Competitors must present their vehicle, in a clean condition, with any relevant paperwork, for scrutineering at the nominated time prior to taking part in the event.

32.1.3. Competitors must attend any meeting or briefing where this is required by the SRs, by the Clerk of the Course, or by the Stewards of the Meeting.

32.1.4. Competitors and their service/pit assistants must at all times obey the instructions of an authorised official of the meeting.

32.1.5. Competitors and their service/pit assistants must at all times display means of identification (i.e. passes etc.) as provided by the organisers.

32.1.6. Competitors must remain available at an event until any protest period relating to their event or appeal period in any matter in which they are involved has elapsed, failing which, any judicial action against or relating to that competitor may be heard in their absence (C6.3, C7.1.5).

32.1.7. Any competitor knowingly injuring a marshal, an official or spectator during an event must:

(a) Ensure that adequate help is available.

(b) Report the incident to a Senior Official as soon as possible.

(c) Report personally to the Clerk of the Course, not later than the conclusion of the event, and remain at his disposal until released.

(d) If the incident happened on the Public Highway, competitors are reminded of their obligations under the RTA.

Foreign Events

33.1.1. A competition licence holder proposing to compete in an event outside the European Union is required by FIA Rules to ensure that the event is inscribed on the FIA International Calendar. International Competition Licences issued by Motorsport UK constitute an authorisation 'Visa' and allow eligible holders to compete abroad on such events. (See 26.2.1.)

33.1.2. Only competitors classified as finishers and who have produced the appropriate documents to prove their eligibility for a competition will be eligible for an award or an individual position in the results unless the SRs specify otherwise.

Results and Awards

34.1.1. Any award which is not specifically offered to a person other than the entrant will be given to the entrant.

34.1.2. Where eligibility for an award depends upon club membership this will be determined by means of the club membership claimed on the entry form. Details of the club must be printed in the programme. No competitor may compete for more than one such award.

34.1.3. No competitor may be a member of more than one team competing for the same award unless the SRs specify otherwise.

34.1.4. A 'novice' will be a driver who has not previously won an award in a competition of similar or higher status and type unless the SRs specify other conditions.

34.1.5. The results of a competition will be 'Provisional' until all vehicles subject to Post-Event Scrutiny have been examined and a report submitted to the Clerk of the Course, all official enquiries by the Clerk of the Course and/or Race Director completed and every competitor has had an opportunity to protest and/or appeal in accordance with the Regulations, and such protest or appeal has been duly heard.

34.1.6. Once results are Final they may not be changed subject only to the powers held by Motorsport UK.

34.1.7. If the Provisional Results are amended for any reason, fresh Provisional Results must be published and these become subject to protest or appeal in accordance with the preceding point.

34.1.8. If printed results sheets are available to all competitors on the day, copies of these results need not be posted to entrants. Any alteration to the Provisional Results must be notified to all entrants.

Advertisement of Results of Competition

35.1.1. Any competitor or other persons or body advertising the results of a competition shall state the exact conditions of the performance referred to, the nature of the competition, the category, class, etc., of the vehicle, and the position and result obtained, and such additional information as Motorsport UK may require.

35.1.2. The publication of an advertisement, relating to the results of a competition drawn up in a way calculated to mislead the public, or the infraction of this Rule whether by way of omission from or addition to the particulars required to be stated or otherwise, shall render the person or body by whose authority or on whose behalf the advertisement is published or issued liable to the penalties provided by these Rules, and may entail the infliction of a penalty on the person responsible for drawing up the advertisement.

Successful Prosecution (D.25.1.15)

36.1.1. Any competitor who is successfully prosecuted as a result of his conduct in connection with a motor vehicle whilst taking part in an event may, at the discretion of the Stewards of the Meeting, subsequently be disqualified from the results of that event and be required to forfeit or return any award. Details of any successful prosecution known to the organising club shall be passed to Motorsport UK, who will endorse his licence record and may disqualify the person concerned from competing in other events.

Insurance

37.1.1. In respect of any event or part of an event held anywhere other than on a publicly adopted road, under a Permit issued by Motorsport UK, competitors will be insured in respect of third party public liability by the Motorsport UK Master Policy.

37.1.2. Competitors are not insured under this policy in respect of legal liability to other competitors.

37.1.3. It is the competitor's responsibility to ensure that he is properly insured, as required by the Law, whilst on publicly adopted roads.

37.1.4. Further details of Insurance are given in Part 3, Appendix 2.

37.1.5. The competitor shall comply with the terms of the master insurance policies effected by Motorsport UK, the principle terms of which are summarised in Part 3, Appendix 2.

37.1.6. A full copy of the master insurance policy may be seen on application to the Motorsport UK Company Secretary at Motorsport UK House.

Control of Drugs and Alcohol (D35.1)

Anti-Doping Regulations

38.1. Motorsport UK has adopted the UK Anti-Doping rules published by UK Anti-Doping (or its successor) as amended from time to time. Such rules shall take effect and be construed as Regulations of Motorsport UK. The UK Anti-Doping Rules are available at www.ukad.org.uk and the WADA Prohibited List is available at www.wadaama.org or from Motorsport UK on request. It is the responsibility of each licence holder to ensure that they are fully familiar with the UK Anti- Doping Rules and the WADA Prohibited List. The FIA Anti-Doping Regulations will apply in respect of any International event.

Anti-Alcohol and Illicit Drugs Regulations

38.2. The Motorsport UK Anti-Alcohol policy and Illicit Drugs guidelines are published on the Motorsport UK website. It is the responsibility of each Licence holder to ensure that they are fully familiar with the Motorsport UK Anti-Alcohol and Illicit Drugs policies and guidelines. The FIA Regulations will apply in respect of any International event.

38.3. Entrants must respect that Motorsport UK have the right to require alcohol and illicit drugs testing on any Person howsoever connected with any Entry operating within a Motorsport UK Permitted Event and who shall at all times cooperate fully with the relevant procedures. These procedures are in addition to and not in substitution for any procedure undertaken by or at the instance of UK Anti-Doping (D.35.1.1.)

38.4. Any Person who fails prescribed limits or evades or refuses to comply with testing procedures for Anti-Alcohol Testing, Anti-Doping Testing or Illicit Drugs testing will have their Licence and/or all activities within Motorsport UK Permitted Events suspended pending further investigation and will be required to leave the Permitted Event Venue. (D25.1.14.)

Drawing H12.1.7

Appendix 1: Charts and Diagrams

Chart 7: Competitors Minimum Ages

Discipline	*Driver*	*Navigator*	*Front Passenger*	*Rear Passenger*	*Remarks*
RACE					
Car Race	16				14 Junior Race Formulae only
Truck Race	21				21 min age on road
Kart Race L/C	16				210cc max to 17
Kart Race S/C	8				85cc gearbox from 13 U15.1.1
Kart Tyro	11				
Kart Endurance	16				15hp per Kart
Kart Bambino	6				Special Conditions
RALLY					
Road Rally*	17+RTA	12		2	2-12 in a Child Seat
Navigation Rally*	17+RTA	12		2	2-12 in a Child Seat
Stage Rally	17+RTA	16			14 Junior Rally Championship only 14 Single Venue Navigator
TRIALS					
Car Trial**	14		12	2	2-12 in a Child Seat T4.1.6
Classic Reliability Trial**	17+RTA		14	2	2-12 in a Child Seat T4.1.6
Sporting Trial**	16		14		
AUTOTEST					
Autotest	16				14 up to 2000cc inc forced induction
PC Autotest/AutoSOLO***	14		12		
CROSS COUNTRY					
Hill Rally***	17+RTA	16			
Safari***	17+RTA		16		
Cross Country Tyro**	13		12	2	2-12 in a Child Seat P44.2.6
Cross Country Trial***	17		14		Junior Trials from 8-17
SPEED					
Sprint and Hillclimb	16				14 Junior Sprint only 14 Junior Hillclimb with Junior Sprint experience
Minicross	14				
Autocross	16				14 Junior Autocross
Clubcross	14				
Rallycross	16				14 Junior Rallycross
Drag Race	16				Junior Dragsters from 8

Passengers are ONLY permitted in events indicated by: *, ** and ***

* Rear passengers do NOT need a licence if under 18

** Front and rear passengers do NOT need a licence if under 18

*** Driver and front passenger need licences

Chart 26: Competitors Minimum Acceptable Licences

MOTOR SPORT DISCIPLINE	EVENT STATUS (as defined in Supplementary Regulations)			
	CLUBMAN	INTERCLUB	NATIONAL	INTERNATIONAL
AUTOTESTS	RS Clubman	Any Interclub		
ALL TRIALS	RS Clubman	Any Interclub		
NAVIGATION RALLY	RS Clubman	Any Interclub	Any National	
ROAD RALLY (including Targa, Historic and Endurance)	RS Clubman	Any Interclub	Any National	
SAFARIS, TIME TRIALS, TEAM RECOVERIES, CHALLENGE EVENTS	RS Clubman	Any Interclub	Any National	Cross Country 'ITC-'R' or Stage Rally International 'ITC-'R'
HILL RALLIES	RS Clubman (6)	Any Interclub	RS National (5)	Cross Country 'R' or Stage Rally International 'ITC-'R'
CLUBCROSS	RS Clubman			
AUTOCROSS (including MINICROSS)	RS Clubman	Any Interclub		
HILL CLIMBS, SPRINTS		Any Interclub (6)	RS National or Race National (6)	Speed 'ITD-R' or Race International
DRAG RACES		Any Interclub	RS National – Drag Endorsement	Drag International 'ITD-R'
RALLYCROSS		Any Interclub	RS National or Race National	Off-Road International 'ITC-C' Race International
STAGE RALLIES		RS Interclub – Stage Rally (4)	RS National– Stage Rally (5)	Rally International 'ITC-R'
STAGE RALLIES (HISTORIC)		RS National – Stage Rally	RS National– Stage Rally	Rally International 'ITC-R'
KART ENDURANCE	Kart Clubman (7)			
KART TYRO	Kart Clubman (7)			
KART BAMBINO	Kart Clubman Bambino (9)			
RACE		Race Club	Race National	Race International (10)
RACE HISTORIC		Race Club	Race National	Race International (10)
RACE KART (11)		Kart Interclub or Race Club	Kart National or Race National	Kart International
RACE TRUCK		Race National – Truck Endorsement	Race National – Truck Endorsement	International Truck 'ITC-R'

NB

(1) A higher grade licence is always valid for lower permit events of the same discipline (exceptions see 8 below).
(2) Race licences are valid for speed events.
(3) Race[10], RS and RS Stage Rally licences are valid for Rallycross.
(4) Any Interclub, RS National, Race National, RS Rally National Navigator and any International Licence is valid for Stage Navigator.
(5) RS Rally National Navigator is valid for Stage Navigator.
(6) RS National or Race National required for vehicles defined in S7.1 of the Regulations.
(7) Kart Clubman licence is only valid for Kart Endurance/Kart Tyro events.
(8) Race National Licences also valid for Long Circuit Kart events.
(9) A Kart Bambino event may accept any competitor until the 31st December in the year of their 8th birthday.
(10) Weight to power ratios have been imposed by FIA according to licence status. Unless otherwise stated reference to International Race requires a minimum licence status of International 'ITC-C' Race.
(11) For Long Circuit Kart events either the endorsed "valid for Long Circuit" Kart Licence or Race Licence, as specified above, is acceptable.

Chart 27 : Minimum Acceptable Entrants' Licences

Status of Event	National	International UK	International Overseas (Non-FIA Championship)	FIA Championships
Cross Country	National Entrant	International Restricted Entrant	International Open Entrant	International Open valid for FIA
Speed	National Entrant	International Restricted Entrant	International Open Entrant	International Open valid for FIA
Rallies	National Entrant	International Restricted Entrant	International Open Entrant	International Open valid for FIA
Races	National Entrant	International Restricted Entrant	International Open Entrant	International Open valid for FIA
Kart Races	Kart Entrant	Kart Entrant	Kart International Entrant	International Open valid for FIA

NB : A higher grade licence is always valid for lower permit events of the same discipline.

(J) Competitors: Vehicles

General

1.1. Vehicles competing in events will conform to the Technical Regulations as appropriate.

1.2. Categories of Vehicles. Where the Supplementary Regulations leave any doubt as to the category in which a particular type of vehicle falls for the purposes of the competition, the position shall be governed by the definitions set out in these Regulations.

Competition Car Log Books (CCLB)/Vehicle Passports (VP)

2.1. Competition Car Log Books/Vehicle Passports are required for certain sporting disciplines, as detailed in the Specific Regulations. Vehicle Passports are available from International, and National Scrutineers. Vehicle inspections can be arranged by appointment with an appropriate local scrutineer.

2.1.1. By reciprocal arrangement Motorsport UK will recognise log books issued by the MSI (Motor Sport Ireland). Such log books are considered valid for competitions within the UK.

2.1.2. To obtain a Vehicle Passport, a registration document (where appropriate) for the vehicle, or vehicle identity number is required. A recent good quality colour photographs showing the car static, unoccupied and in tyre contact with the ground must be shown on the CCLB/VP. Photos for VPs must include a front 3/4 view from right side, rear 3/4 view from left side (both with number plate legible where applicable) and an engine bay view.

CCLB/VP continuation sheets may be obtained from Motorsport UK.

2.1.3. CCLBs/Vehicle Passports refer to complete cars and must not be transferred with a bodyshell.

2.1.4. Any CCLB/VP issued will remain the property of Motorsport UK, which reserves the right to withdraw or suspend it at any time, stating the reasons why.

2.1.5. CCLBs/VPs must be sent to the Motorsport UK Technical Dept for any of the following reasons:

(a) Issue of new VP.
(b) Change of engine type or capacity.
(c) Change of ownership. Change of bodyshell.
(d) Change of address.
(e) Vehicle disposal or dismantling.
(f) Change of vehicle colour (with new photos).

CCLB continuation sheets may be obtained from Motorsport UK.

2.1.6. Competition Car Log Books first issued prior to 1st January 2000 will expire on 31st December 2020.

CCLBs first issued between 1st January 2000 and prior to 31st December 2004 will expire on 31st December 2022.

CCLBs first issued between 1st January 2005 and prior to 31st December 2009 will expire on 31st December 2023.

All other CCLBs will expire on 31st December 2025.

Once a CCLB has expired a new Vehicle Passport will need to be applied for. Until the date of expiry a CCLB may continue to be returned to Motorsport UK for amendment per 2.1.5.

Scrutineering (G.7)

3.1. Before taking part in any competition, or practice for any competition, all vehicles must be presented to the event Scrutineers for examination and approval.

3.1.1. The fact of obtaining a Scrutineer's approval at pre-event scrutiny does not indicate that the Scrutineer is accepting any responsibility for the safety or the roadworthiness of the vehicle, nor does it indicate that the vehicle complies in all respects with the Regulations. Please note that pre-event scrutineering or logbook inspection by a scrutineer is only a spot check of a limited number of key safety and eligibility features of a vehicle's condition. Alone it will not guarantee that the vehicle meets all applicable regulations or standards.

3.1.2. Subsequent to pre-event scrutiny, any vehicle involved in an accident, or having been modified in any way, should be represented to the Scrutineers for further examination.

3.1.3. At any time during an event, the Clerk of the Course, or the Scrutineers may order that a vehicle be re-examined, even if this involves stopping a vehicle whilst practising or competing.

3.1.4. At the conclusion of a competition, a number of vehicles, as agreed by the Clerk of the Course and the Scrutineers, or as ordered by the Stewards, or as laid down in the Regulations, may be required to be presented for Post-Event Scrutiny. No work is to be done on such vehicles after finishing the competition except by permission or request of the Scrutineers, until after the examination is completed and the vehicle released. It is the responsibility of the competitor to provide appropriate tools and personnel within an agreed time to carry out the work required.

3.1.5. The Post-Event Scrutiny will be mainly directed at the vehicle's eligibility and may involve parts of the vehicle being sealed for subsequent stripping and examination (C.5.3). This should normally be within a maximum of 30 days, although it can be extended by mutual agreement to 50 days. At the end of the season, series or championship, it should never exceed 30 days.

3.1.6. Vehicles, or components, may be sealed on the instructions of the Clerk of the Course, Stewards of the Meeting, the Technical Commissioners, or following a protest. Sealing may be by wire seals, special reactive paint, or other suitable method. Such seals must not be broken except with the written permission of the person who originally affixed the seal, or of Motorsport UK, or by the person designated to examine the parts in question. The Technical Commissioner or Scrutineer examining the vehicle or component will report his findings to the Clerk of the Course for his action (C.3.1.1).

Note: Throughout these sections an asterisk(*) indicates a requirement for additional information to be printed in the Supplementary Regulations (SRs). Text shown in Italics indicate a Regulation which may be amended in the SRs. Text shown in red indicates a new or amended regulation for 2022.

3.1.7. Approval of a vehicle will only be in relation to those items of the vehicle which have been examined and will only apply to the event which the vehicle has just completed.

Competition Numbers [Chart 4]

4.1. Numbers must be displayed in a durable manner and be black, of a minimum size of 23cm high with stroke width of a minimum of 3.8cm on a white oblong background measuring not less than 48cm x 33cm which must extend at least 5cm beyond the outline of the numbers. Alternatively, the numbers may be displayed on a white circular background provided that the background extends at least 5cm beyond the outline of the numbers.

4.1.1. If on a white vehicle a background of the dimensions in 4.1. must be delineated by a continuous black line, except for cars of period A to E.

4.1.2. Numbers must be displayed on each side of the vehicle (front doors, alongside the cockpit or on rear wing end plates) and on the foremost part of the nose.

4.1.3. Certain types of competition have special requirements which will appear in SRs (Subject to approval by Motorsport UK) (see U.17.25 to 17.28 for Kart Numbers and Q11.5. for Circuit Racing).

4.1.4. Note. Consideration should be given at all times to the positive identification of vehicles by the competition organisers, whose decisions will be final.

4.1.5. The numbers must be of the 'Classic' type as shown below:

1–2–3–4–5–6–7–8–9–0.

4.1.6. In International events on both front wings an illustration of the national flag(s) of the driver(s) as well as the name(s) of the latter shall be displayed. Minimum height of both flag(s) and name(s) shall be 4cm.

4.1.7. Any means of identifying individual cars during a competition MUST be removed at the finish of the event.

4.1.8. Race organisers may use three figured numbers subject only to:

(a) the specific approval of the Chief Timekeeper

(b) that the white background respects the requirement of 4.1. above, which must extend at least 5cm beyond the outline of the numbers.

Technical

5. The following technical regulations are mandatory and apply to vehicles in all forms of competition (other than Karting). In addition vehicles must comply with the appropriate Specific Technical Regulations. Where there are several regulations concerning any particular subject it shall be taken, as a general principle, that one does not override another unless specifically stated.

General

5.1. As a general principle in all Technical Regulations, it is prohibited to carry out any tuning or modification that is not specifically permitted. The fact that some modifications are mentioned as prohibited does not imply that others are allowed.

Vehicles that are not exclusively powered by an internal combustion engine are subject to the following regulations, those set out in (K) or SR's as appropriate. Electrified Vehicles must comply with Appendix 2.

5.1.1. Competitors competing under the provisions of H12.1 are permitted to make modifications, additional to those permitted by regulation, solely for the purpose of enabling operation of vehicle control systems.

5.1.2. Period Defined Vehicles (Non- Rally) taking advantage of any exemptions for Period Defined Vehicles within the General Regulations must have been issued with either a validated Motorsport UK Period Defined Vehicle Identity Form, an FIA Historic Technical Passport, or an approved Vehicle Identity Form issued by an Motorsport UK Registered Club, which must be presented at Scrutineering. This will be the definitive document defining the vehicle period.

All vehicles must: Chassis/Body (including aerodynamics)

5.2.1. Be fitted with bodywork including a driver (and passenger) compartment isolated from the engine, fluid filled batteries, gearbox, hydraulic reservoirs (with the exception of fire extinguishers) pressurised above atmospheric pressure, pneumatic reservoirs and accumulators, transmission shafts, chains, belts and gears, brakes, road wheels, suspension components including their operating linkages and attachments, petrol/fuel tanks, oil tanks, water header tanks, catch tanks and fuel system components (other than where such components comply with 5.13.1 and 5.13.2) such as to prevent there being a hazard.

With the exception of cars of Periods A-E, front engine vehicles to be fitted with a bonnet covering the engine and all its' major components.

Excepting for cars of Periods A-E exposed transmission shafts, gears and chains to be guarded such as to prevent their being a hazard.

Where a radiator is not isolated from the driver/passenger compartment a suitable deflector to be fitted to prevent fluid directly coming into contact with the vehicle's occupants.

5.2.2. With the exception of cars of Periods A to E, which in period specification were not equipped with a bonnet or casing of metal or solid flame resistant material covering and surrounding the main engine structure, have a protective bulkhead of non-flammable material between the engine and the driver/passenger compartment capable of preventing the passage of fluid or flame. Gaps must be sealed with suitable flame proof material that completely closes any gap at all times.

Magnesium is prohibited for bulkheads.

5.2.3. Have a complete floor of adequate strength rigidly supported within the driver/passenger compartment.

5.2.4. Not have the space normally occupied by passengers encroached upon in such a way that may impede extrication of the driver from that side, but may have the passenger seats removed.

5.2.5. Deleted.

5.2.6. With the exception of racing cars or cars of A to D be equipped on all wheels with mudguards which present no sharp edges and cover the complete wheel (flange+rim+tyre) around an arc of 120 degrees. This minimum coverage must:

(a) be achieved with a continuous surface of rigid material within which ventilation louvres may be fitted. The tyre must not be visible when viewed from above. When viewed from the rear, the tyre must not be visible above any point 50mm or more above the axle centre line

(b) extend forward ahead of the axle line

(c) extend downward behind the wheel.

5.2.7. Aerodynamic devices may only be fitted to Racing and Sports Racing Cars (unless prohibited by an Approved Formula), or where specifically permitted, where FIA homologated, or where complying with National type approval. Such devices must not extend beyond the maximum width of the vehicle, above the maximum height of any roof, or for an open car the maximum height of the ROPS. For Saloon and Sports Cars such devices must not extend longitudinally from the bodywork by more than 100mm. For Sports Racing Cars such devices must not extend longitudinally from the rear wheel axis by more than 1100mm. Racing Cars must comply with Q.Appendix2.

5.2.8. If originally fitted with driver/passenger doors, hatchback doors, sliding doors, opening boots or tailgates, these must be secured in the closed position during events.

5.2.9. Have effective means of ventilating closed cars.

5.2.10. Tinted glass in any window which can significantly affect through vision (in or out) or distort the colours of signal flags or lights, is prohibited.

5.2.11. With the exception of Cross Country Vehicles, Racing Trucks and Karts, in all vehicles with the driver seated normally, the soles of his/her feet, resting on the pedals in the inoperative position, shall not be situated to the fore of the vertical plane passing through the centre line of the front wheels. Not applicable to vehicles constructed prior to 1.1.99 or for those vehicle designs which have participated in a Motorsport UK Permitted Championship prior to 1.1.99.

Seating

5.3.1. Have a normal adequate seat for the driver.

5.3.2. With the occupant seated, the seat must be correctly located and securely anchored within the compartment and must not tilt, hinge or fold unless it is a production seat fitted with a serviceable locking mechanism preventing independent operation.

5.3.3. It must support and retain the driver within the vehicle.

5.3.4. The seat cushion (i.e. the part on which the occupant sits) when uncompressed, must not be less than 15.25cm below the top edge of the adjacent body side or door.

5.3.5. Any other seats fitted must similarly comply and all seats must face forward.

5.3.6. Cars of Periods A to D are exempt from this requirement.

5.3.7. If a single seater, the maximum time for a driver to get in or out of the vehicle must not exceed 10 seconds.

Engines

5.4.1. If forced induction is used, the coefficient will be 1.7:1. unless stated otherwise in Specific Technical Regulations or SRs.

5.4.2. Be equipped with a positive method of throttle closing by means of external spring/springs so that in the event of failure of any part of the throttle linkage the throttle(s) are sprung closed.

5.4.3. Vehicles fitted with electronic throttle control as standard original manufacturer's equipment for that vehicle are exempt from this requirement.

Suspension

5.5.1. Be fitted with sprung suspension between the wheels and the chassis.

5.5.2. Suspension must be controlled to avoid fouling of wheels on chassis or bodywork.

5.5.3. Cars of Periods A and B need not have sprung suspension, if originally built without it.

Brakes

5.6.1. Be fitted with brakes that are operative and capable of stopping the vehicle as required.

5.6.2. Non-ferrous disc brakes are prohibited unless a Standard Part for that vehicle, or specifically authorised by Motorsport UK for a class or category of car.

Steering

5.7.1. Have a steering wheel with a continuous rim not incorporating any reflex angles in its basic shape (except for Drag Race vehicles). 'D' shape wheels are permitted.

5.7.2. Specifically not permitted are wheels having a non-continuous rim shape similar to that shown in the Drawing 5.7.

5.7.3. Cars of Periods A and B may have a tiller or alternative to a steering wheel if it formed part of the original vehicle.

5.7.4. Have steering movement controlled to avoid fouling of wheels on chassis or bodywork.

5.7.5. Rear wheel or four wheel steering is prohibited unless fitted on a Production vehicle by the manufacturer, or permitted under the Specific Technical Regulations, or SRs.

Wheels

5.8.1. Have not less than four road wheels and tyres (excluding the spare).

5.8.2. Not be fitted with any wheel spacer exceeding 2.5cm in thickness or of less than hub diameter. Multiple or Laminated Spacers and extended studs are prohibited.

5.8.3. Have all hub nave plates and wheel embellishers removed.

Tyres

5.9.1. Have tyres complying with Specific Technical Regulations and/or Construction and Use Regulations (if Standard Road Tyres), for the duration of the event.

5.9.2. Tyres, if treaded, must have not less than 1.6mm of tread remaining at the start of an event. Formula Ford 1600 1mm.

5.9.3. Where freedom of choice of tyres is left to the Competitor, the responsibility rests with each Competitor to ensure that the tyres to be used are of adequate rating having regard to the potential speed of their vehicle and the nature of the event.

5.9.4. The fitment and/or use of pressure control valves to wheels and/or tyres is not permitted.

5.9.5. Unless permitted under sporting regulations the use of chemical tyre softeners is not permitted.

5.9.6. The interior of the tyre (space between the rim and the internal part of the tyre) must be filled only with air or nitrogen. This does not preclude the use of inner tubes.

Cooling

5.10.1. Have any fluid carrying lines or tubes carrying coolants through the driver/passenger compartment painted red, except for HV Battery cooling lines. And if non-metallic to be internally or externally metal braided hydraulic pressure hose.

5.10.2. Screwed hose clips (e.g. 'Jubilee Clips') may only be used in conjunction with a suitably swaged pipe.

LISTA STORAGE SOLUTIONS FOR MOTORSPORT

BENEFITS

+ Proven expertise
Many years of experience equipping all areas of Motorsport

+ Modular design
Universal modular system

+ Top industrial quality
10 Year guarantee

+ Customisation
Define your exact requirements

+ Completely universal
From a single mobile cabinet to full facility fit out

CALL US NOW
OR SEND AN E-MAIL
01908 222333
info.uk@lista.com

www.lista.com

LISTA

Transmission

5.11.1. Have the transmission outside the driver/passenger compartment, beneath the floor or secured in casings or coverings of solid material.

5.11.2. Be equipped with a reverse gear in normal working order unless otherwise stated in Specific Technical Regulations. Racing Cars of Periods A to E are exempt from this requirement.

Oil Systems

5.12.1. Have any oil lines passing through the driver/passenger compartment protected and, if non-metallic, to be of internally or externally metal braided hydraulic pressure hose.

Fuel Systems

5.13.1. Have any fuel lines passing through the driver/passenger compartment protected and, if non-metallic, to be internally or externally metal braided hydraulic pressure hose or fuel lines complying with FIA specifications.

5.13.2. They may only be joined by screwed sealing joints or vehicle manufacturers approved joint.

5.13.3. If fitted with fuel fillers in a closed boot, or under closure, have collector/spill trays incorporated to drain outside the vehicle.

5.13.4. Use Pump Fuel (see definition Nomenclature and Definitions) except, subject to prior written authority having been given by Motorsport UK, where permitted otherwise under event SRs, and Championship Regulations.

5.13.5. If using LPG, the entire system must conform with Construction and Use regulations and LPG Industry Technical Association Code of Practice No. 11.

5.13.6. If using non-pump fuel have a 3 inch diameter 'Day-Glo' orange disc affixed immediately adjacent to the Competition Numbers on both sides.

5.13.6.1. Any vehicle using methanol must include a Motorsport UK approved additive which provides a distinguishable colour and smell when burning. The maximum permitted volume of additive within the fuel is 0.2%.

5.13.7. With the exception of cars competing in Sprint and Hill Climb road going production category, cars competing in British and Motorsport UK Titled Championships for, and all new build cars for, Rallycross, Car Racing, Special Stage Rallying, Sprints and Hill Climbs must be equipped with the facility to enable a fuel sample to be taken. For fuel injected cars the facility must be a dry break fuel sampling coupling, approved by the FIA, Competitors must carry and make available a 300mm minimum length of hose to which, where necessary, the appropriate mating part is to be attached.

5.13.8. Have sufficient fuel for a fuel test (D.34) present at any time during the event.

Electrical Systems

5.14.1. If located in the Driver/Passenger compartment, where a Passenger/Co-Driver is present the Auxiliary battery must be situated behind the base of the Driver's or Passenger/Co-Driver's seat.

Any wet Auxiliary batteries in driver/passenger compartment must be enclosed in a securely located leak-proof container.

5.14.2. Have Auxiliary batteries duly protected to exclude leakage of acid and to protect terminals from short circuiting and producing sparks.

5.14.3. With the exception of racing cars be equipped with Auxiliary battery, generator, self-starter, side, tail, and brake lights. All this equipment to be in normal working order. Exceptionally when taking part in an event held totally off the public highway, need not comply with DfT Statutory Requirements regarding lighting or horn.

5.14.4. With the exception of racing cars, or cars of Periods A to C, have headlights in normal working order with glasses of minimum 182.5 sq cm each unless SRs permit their removal.

5.14.5. Have the Auxiliary battery earth lead, if not readily distinguishable, identified by a yellow marking. 5.14.6. If required to have a self-starter, be able to demonstrate during the competition that it is capable of starting the engine.

5.14.6. If required to have a self-starter, be able to demonstrate during the competition that it is capable of starting the engine.

5.14.7. Engines must be fitted with effective radio interference suppressors.

5.14.8. Any vehicle incorporating an electrical system, with the exception of ignition systems, which may run at a voltage exceeding 60V must display the sign detailed in Drawing 5.14 next to all competition numbers.

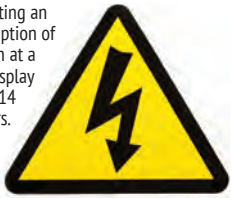

Drawing 5.14

Minimum size 75mm x 75mm

5.14.9. If non lead acid Auxiliary batteries are used as the main vehicle battery, they battery pack(s) must carry the appropriate "EC" and markings. and be either a Standard Part or manufactured by a Motorsport UK registered manufacturer.

5.14.10. With the exception of Electrified Vehicles, the total quantity of recuperated energy stored in the car must not exceed 200 kJ; this energy may be re-used without exceeding 10 kJ by means of 1kW maximum.

Weight/Ballast

5.15.1. If subject to a minimum weight, that must be the weight of the vehicle in the condition in which it crosses the finishing line (excluding driver and passenger), or at any time during the competition and/or practice (except for certain classes or formulae which include the driver in the total weight).

5.15.2. Any ballast required must be attached to the shell/chassis via at least 4 mounting points using bolts with a minimum diameter of 8mm each with steel counter plates of at least 400 sq mm surface area and 3mm thickness.

5.15.3. Provision must be made for the fixation of seals by scrutineers if deemed necessary.

5.15.4. Where ballast is fitted to touring, sports, sports racing or GT cars it shall be fitted in the passenger's location.

5.15.5. Single seat racing cars are exempt from the above mounting requirements.

Exhausts

5.16.1. Have the exhaust system isolated from the driver/passenger compartment (e.g. beneath the floor or secured in casings of solid material).

5.16.2. Have no part of the exhaust system protruding to the rear of the bodywork more than 15cm.

Cirrus Research plc

DON'T BE AT THE RED LINE OF NOISE

For noise monitoring in motorsport, contact the experts and enjoy preferential rates.

cirrusresearch.com/motorsport

sales@cirrusresearch.com +44 (0)1723 891655

RETRO REPRODUCTIONS

DIFFICULTY FINDING PLASTIC AND RUBBER PARTS?

WE CAN REPLICATE & REMANUFACTURE UNOBTAINABLE & OBSOLETE PLASTIC & RUBBER MOULDED COMPONENTS FOR CLASSIC, VINTAGE AND RETRO VEHICLES.

CONTACT US

parts@retroreproductions.co.uk

+44(0)121 779 4762

www.retroreproductions.co.uk

ID Mouldings

Prototype and Low Volume Plastic and Rubber Specialist

PU MOULDING – RIM
POLYURETHANE REACTION INJECTION MOULDING
FLEXIBLE, SEMI-RIGID AND HIGH IMPACT POLYMERS

RAPID PROTOTYPES, LOW VOLUME AND PRODUCTION CONSULTANCY
- 3D Printing
- Machining
- Vacuum Casting
- Metal Fabrication
- Finishing

INJECTION MOULDING
NEW PROJECT DEVELOPMENT,
PRODUCTION SOURCING &
PROJECT RESHORING CONSULTANCY

CAD / CAM
DESIGN AND MODEL CREATION
REVERSE ENGINEERING

info@idmouldings.com

+44(0)121 779 4762

www.idmouldings.com

5.16.3. If Racing Car with rear aerodynamic device, not have any exhaust pipes extending rearwards beyond the aerofoil.

5.16.4. If Racing Car without aerodynamic device, not have exhaust pipes extending more than 60cm beyond the rear wheel axis.

5.16.5. If Rear Engined Single Seater Racing Car, have the exhaust outlet between 4cm and 60cm from the ground.

5.16.6. Have all exhaust outlets terminating behind the mid-point of the wheelbase of the vehicle and within 150mm of the outside of the bodywork periphery in plan view. Side exhausts not to protrude more than 4cm.

For vehicles other than racing cars that are not fitted with enveloping bodywork any side exhaust may not extend beyond the plane through the outside of the front and rear tyres with the front wheels in the straight ahead position. Cars of Periods A to E and Drag race vehicle are exempt from these requirements.

5.16.7. Exhaust catalytic converters must be fitted to all petrol engined production based saloon, touring and sports cars, including specialist production and kit cars, manufactured after 31/12/99. They may be specified for certain other formulae. Competitors are reminded of their obligation to maintain such equipment on a vehicle used on the highway where government legislation requires it.

Silencing

5.17.1. The reason for Silencing (SOUND CONTROL) is to reduce environmental impact and to keep Motor Sport running. Environmental Protection legislation has increased the pressure on activities generating noise and Local Authorities have the power to suppress any noise source deemed to be causing a nuisance. Our system of control is acceptable to most Environmental Bodies and must be considered as part of eligibility to Compete in events.

5.17.2. All competing vehicles are subject to mandatory silencing, unless a specific waiver for that Class, or Formula is granted. Where specified as mandatory, a silencer must be used, irrespective of the exhaust sound generated without it.

5.17.3. Vehicles which comply with the Technical Regulations of FIA Formulae and Championships set out in the current FIA Yearbook and other FIA approved Champion-ships, Series and Cups which are participating in races for such Formulae, Championships, Series and Cups at meetings which have been entered on the FIA International Calendar are exempt from Motorsport UK sound test requirements but must comply with the sound test requirements set out in the appropriate Formulae, Championship, Series or Cup Regulations.

5.17.4. Silencing is not mandatory in competitions catering exclusively for the following categories of vehicle but is strongly recommended, and may be made mandatory in the SRs at the request of the Circuit/Venue owners:

(a) All cars of Periods A to D. (This does not include events any part of which takes place on the Public Highway where national laws will apply.)

(b) Formula 1 and other single seater racing cars of Periods E and F.

(c) Drag race vehicles.

5.17.5. For British Formula Three, British GT and British Touring Car Championships the sound test shall be conducted as set out within these regulations with the engine running at 3/4 maximum speed, the sound level meter at a height of 0.5 metres above the ground (± 0.1 metre) located at 45° to and 0.5 metres distant from the exhaust with a maximum permitted sound level of 118dB(a).

5.17.6. Special regulations apply to High Speed Oval formulae and are only applicable when racing on high speed oval circuits.

5.17.7. Temporary Silencers, by-pass pipes or the inclusion of temporary parts to achieve silencing requirements are prohibited. Officials may refuse to carry out Sound Checks on vehicles utilising temporary parts in exhaust systems. Organisers are empowered to disqualify in such situations.

5.17.8. Circuit/venue owners/organisers may impose additional restrictions in SRs.

Sound Test Requirements (Chart 5.18)

5.18.1. Measurements will be made at 0.5m from the end of the exhaust pipe with the microphone at an angle of 45° with the exhaust outlet and at a height of 0.5 to 1.0m above the ground.

5.18.2. Where more than one exhaust outlet is present, the test will be repeated for each exhaust and the highest reading will be used. In circumstances where the exhaust outlet is not immediately accessible, the test may be conducted at 2.0m from the centre line of the vehicle at 90° to the centre line of the vehicle, with the microphone 1.2m above the ground.

5.18.3. Measurements should be made outdoors with no large reflecting objects (e.g. walls etc.) within 3.0m (in the 0.5m test) or within 10.0m (in the 2.0m test).

5.18.4. Background sound levels should be at least 10dB(A) below the measured level.

5.18.5. Where possible measurements should be taken as close as possible to the vehicle, at the defined distances, to avoid background noise.

5.18.6. Cars of Periods A to D falling within Sections C and D should run engines at two thirds maximum RPM.

5.18.7. The 2.0m test can be made from either side of the car.

5.18.8. The highest reading registered being the one needing to comply with the maximum noise requirements.

5.18.9. Sound testing should be carried out BEFORE taking part in any competition.

5.18.10. The time and location of sound testing should be advised to competitors prior to the event.

5.18.11. It is stressed that all participants in motor sport, competitors, officials, marshals, etc., should be aware of, and protect themselves from, noise.

Safety

5.19.1. All vehicles must comply with Safety Regulations as itemised under their Specific Technical Regulations and as detailed under the section headed Competitor Safety (Section K).

5.19.2. The vehicle occupant(s), seated in their normal position, wearing normal equipment, with seat belts fastened and the steering wheel in place, must be able to evacuate the cockpit in a maximum of 10 seconds.

CARTEK MOTORSPORT ELECTRONICS

BATTERY ISOLATORS

CARTEK electronic Battery Isolators are a very small and highly reliable alternative to the traditional mechanical master-switch.

They have been designed to overcome all of the problems and restrictions associated with mechanical and electro/mechanical master-switches to maximise reliability, enhance safety save weight and simplify installation.

USED BY

OPEL ADAM R2

ADESS LMP3

SUBARU GRC

MINI CHALLENGE UK

FEATURES

- Fully electronic with no moving parts
- Totally sealed against water and dirt
- Completely resistant to shock and vibration
- Fully integrated with built in alternator run-down circuitry - **No extra components required**
- Driver operation by a single internal ON-OFF button/switch
- External operation by single or multiple 'strike' button(s)
- Buttons / switches connected to Isolator using light weight wiring
- Mounts close to battery for reduced cabling
- Very small and weighs just 70g - 140g
- Designed and manufactured in UK using the latest and best quality components available

ALSO FROM CARTEK:

POWER DISTRIBUTION PANELS

WIRELESS CONTROL SYSTEMS

FIA RAIN LIGHTS

SHIFT LIGHTS

For more information please go to :

www.CARTEKMOTORSPORT.com

Miscellaneous

5.20.1. Be of sound construction and mechanical condition and be well maintained.

5.20.2. Have positive fastenings for all doors and all hinged or detachable parts of the bodywork.

5.20.3. Have no temporary parts incorporated in their construction.

5.20.4. Not necessarily be equipped with seat belts, speedometer, spare wheel or bumpers if the event is held on private property unless specified to the contrary by SRs. Any exposed sharp ends of bumpers etc., must be protected.

5.20.5. Deleted.

5.20.6. Not be a vehicle of commercial type, such as a van/pick-up which was initially intended solely for commercial or goods carrying, unless permitted by SRs.

5.20.7. Have a minimum distance of 183cm between the centre lines of the foremost front and rearmost rear substantial load-carrying wheels, unless complying with an Approved Formula, or being a standard production car.

5.20.8. Except for racing cars, be fitted with a windscreen. If plastic windscreen, side screens or rear windows are fitted the thickness must not be less than nominal 4mm (minimum 3.8mm). Except for vehicle models originally in production prior to 1st January 1990, for new build vehicles from 2022 they must be Polycarbonate with a nominal thickness of 6mm (minimum 5.8mm) for the windscreen.

5.20.9. Sports cars supplied as standard with plastic side screens may retain them in their original thickness.

5.20.10. Not have skirts, bridging devices or any form of aerodynamic device between the chassis and the ground/track. Any specific part of the car influencing its aerodynamic performance must:

(a) comply with rules relating to coachwork.
(b) be rigidly secured to the entirely sprung part of the vehicle.
(c) remain immobile in relation to the vehicle.

5.20.11. No part of the bodywork, or of the suspended part of the car, can be below a horizontal plane passing 4cm above the ground (unless stated otherwise in SRs), the car being in normal racing trim with the occupants aboard. A gauge may be used by Scrutineers before or after races or practice to check the ground clearance.

5.20.12. Not carry or pass any liquids or gases, other than air at atmospheric pressure, in or through any tubes comprising part of the chassis structure.

5.20.13. It is strongly recommended for all competitors participating in single venue competitions to have available at their paddock base, and for multi venue competitions to carry within their vehicle a self contained spill kit capable of effectively absorbing minor spillages of up to 1.25 litres of all vehicle fluids – oils, fuels, coolants, battery acid. Used spill kits are to be disposed of in accordance with local or National guidelines.

5.20.14. Any information device (including but not limited to – data loggers, displays, instrumentation, communication systems, trip computers etc.) mounted within the cockpit must use a mechanical means of attachment sufficiently robust to withstand anticipated stresses and vibration and must not present any sharp edges or projections in the vicinity of the driver's body or helmet. Where possible, a secondary means of attachment should also be used. Suction mounts are not acceptable as the primary mounting method.

5.21. On-Board Cameras

5.21.1. The carrying of on-board cameras/videos for personal use is permitted unless prohibited by Event regulations. The carrying of on-board cameras/videos for commercial use is prohibited unless authorised by the Event Organiser.

5.21.2. Where Event or Championship Regulations require the fitting of a camera, the location and method of fitting should be specified.

5.21.3. Where forward facing cameras are fitted for judicial purposes, they should be mounted so as to capture an image that provides a 'driver's eye' view that should include, where possible, the steering wheel, 'dashboard' and a view of the circuit ahead with a field of vision of approximately 100 degrees. In open wheel cars and karts both front wheels should be in view where possible. The fitting of rear-facing cameras may also be required for judicial purposes.

5.21.4. Where cameras are permitted but not mandated by the Organiser, they may be mounted in any location on the vehicle which is considered safe by the Chief Scrutineer.

5.21.5. The mounting of any camera must be specifically approved by the Chief Scrutineer. Any mountings must use a mechanical means of attachment sufficiently robust to withstand anticipated stresses and vibration and must not present any sharp edges or projections in the vicinity of the driver's body or helmet. Where possible, a secondary means of attachment should also be used. Suction mounts are not acceptable as the primary mounting method. Where cameras are fitted by professional TV or film companies, the Chief Scrutineer has discretion to approve non-mechanical mountings.

5.21.6. For karting, U12.6.1 and U19 apply.

5.21.7. Competitors may be obliged to use mountings and/or cameras specified and/or approved by the Organiser and these too must comply with 5.21.5/U12.6.1/U19.

5.21.8. Fitting of cameras to helmets is only permitted in accordance with K10.3.3(d).

5.21.9. Fitting of on-board cameras in Road Rallies is forbidden (R7.2.9).

5.21.10. Unless specified by the Organisers, the choice of system is free but playback must be possible at the Event by regular means such as a lap top computer.

5.21.11. Clerks of the Course and Stewards should not refuse to view relevant on board footage during any judicial process unless they consider there is a good reason why it should not be viewed (in which case, such reason must be stated as part of their written decision). Where the camera has not remained under the control of the Organisers, the Clerk of the Course/ Stewards must be satisfied as to the authenticity of such footage and must consider the weight they will give to such evidence.

5.21.12. Where a camera is mandated, in the event that no images are available upon request (other than due to a proven defect with the equipment) sanctions may be applied in accordance with C2.1.1. The burden of proof to establish the cause of such failure shall lie with the competitor.

5.21.13. The Clerk of the Course may also refer the matter of lack of recorded images to the Stewards of the Meeting for further sanctions or referral to Motorsport UK.

5.21.14. In the event of judicial action being instigated, all relevant on board footage must be retained until the time period for conclusion of all judicial matters has elapsed.

5.21.15. Where it is necessary for a Clerk of the Course to review footage after an Event, such footage should normally be reviewed within a period of 7 days of the Event.

5.21.16. Competitors should be aware of any rights including copyright in relation to footage captured by on board cameras at an Event. Footage may not be shared or otherwise used for broadcast or commercial purposes or on social networking sites, forums or any other internet media without the permission of any rights holders.

5.21.17. Any breach of camera regulations may be subject to the penalties provided for in C2.1.1 with an option to report any matters to the Championship Stewards where appropriate.

Appendix 1: Charts and Diagrams

Chart 5.18: Maximum Noise Limits

The following table gives alternative distance readings. (Noise measured in dB(A).)

	0.5m	2.0m	
Section 'A'	105	93	**CAR RACE (SALOON AND SPORTS CARS) MAXIMUM AT ¾ MAXIMUM RPM**
Section 'B'	108	96	**CAR RACE (SINGLE SEATER AND SPORTS RACING CARS) MAXIMUM AT ¾ MAXIMUM RPM**
Section 'C'	100	88	**STAGE RALLY, AUTOTEST, TRIALS, MAXIMUM AT 4,500 RPM**
Section 'D'	98	86	**ROAD RALLY MAXIMUM AT ⅔ MAXIMUM RPM**
Section 'E'	100	88	**CCV MAXIMUM AT ⅔ MAXIMUM RPM**
Section 'F'	108	96	**AUTOCROSS AND RALLYCROSS MAXIMUM AT ¾ MAXIMUM RPM**
Section 'G'			**HILLCLIMB AND SPRINT MAXIMUM AT ⅔ MAXIMUM RPM –**
	110	98	**RACING AND SPORTS LIBRE CARS AND CARS COMPLYING WITH S.13**
	108	96	**ALL OTHER CATEGORIES**

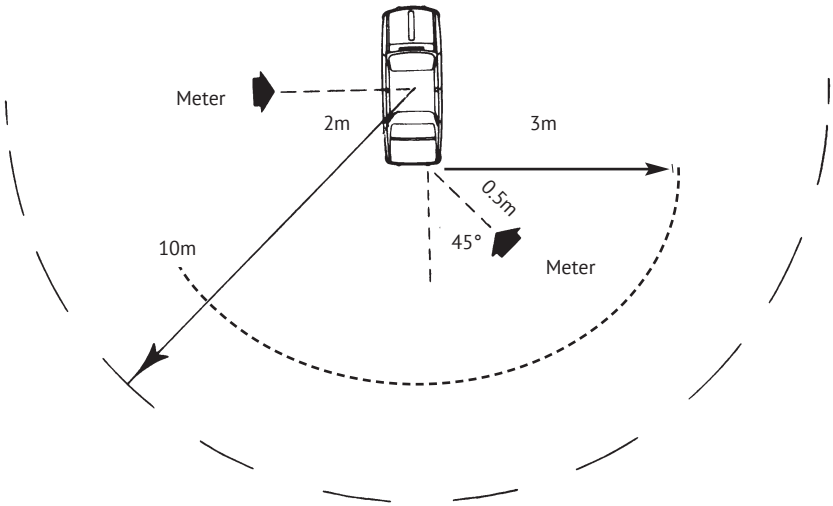

Drawing 4: Competition Numbers

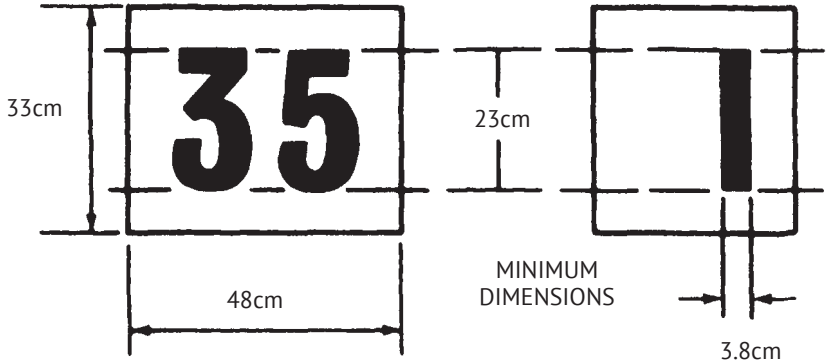

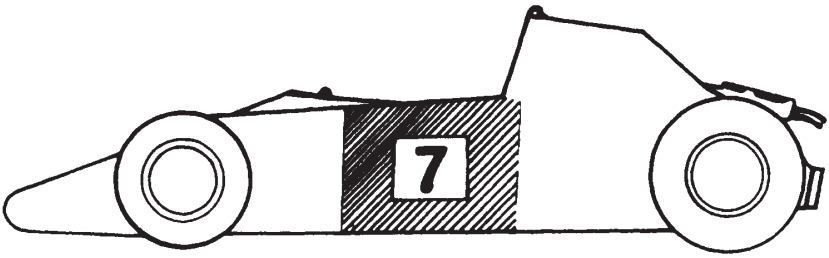

Drawing 5.7: Steering

Appendix 2: Regulations for Electrified Vehicles

Technical: Electrified Vehicles

5.22.1. The term Electrified Vehicle (EV) is used in these regulations to cover all forms of Electrified Vehicles (including those defined in FIA Appendix J – Article 251) : mild Hybrid Electric Vehicle (mHEV), Hybrid Electric Vehicle (HEV) / Full Hybrid Electric Vehicle (FHEV), Plug-in Hybrid Electric Vehicle (PHEV) and Electric Road Vehicle(ERV) / Battery Electric Vehicle (BEV).

5.22.2. High Voltage (HV) shall be as defined in FIA Appendix J Art 251 3.1.10 (from ISO 6469-1:2009): > 30V AC and ⩽ 1000V AC or > 60V DC and ⩽ 1500V DC.

5.22.3. An EV may contain a High Voltage (HV) or Low Voltage (LV) propulsion system.

5.22.4. As a general principle in all Technical Regulations, it is prohibited to carry out any tuning or modification that is not specifically permitted. The fact that some modifications are mentioned as prohibited does not imply that others are allowed.

5.22.5. Changes to these Technical Regulations made on grounds of safety may be enforced immediately without notice.

5.22.6. These General Technical Regulations are for individual vehicle builds. Championships for specific vehicles not in accordance with these regulations may apply for approval, which will be considered at the discretion of Motorsport UK.

5.23. PERMITTED ELECTRIFIED VEHICLE TYPES (Table 2).

5.23.1. These regulations apply to any modified National Type Approved or bespoke/prototype EVs intended for competition use. Standard and unmodified production EVs are subject to the existing requirements of Motorsport UK and the FIA where applicable.

5.23.2. A Standard vehicle is defined as built by the manufacturer in accordance with its homologation/type approval with no modifications or alteration of the vehicle structure, powertrain, or electrified propulsion system. E.g., competition seats using the original mounting points and fasteners are permitted. A ROPS requiring fastening to the vehicle structure is prohibited.

5.23.3. A Modified vehicle is a Standard vehicle with non-powertrain modifications only (including fitment of safety equipment, including ROPS, which alters the vehicle structure). No modifications to the internal combustion engine (ICE) and/or electrified propulsion system are permitted.

5.23.4. A Bespoke vehicle is one designed and constructed from scratch, including prototypes. Only Bespoke BEVs are permitted. Bespoke includes prototype or otherwise unique competition vehicles.

5.23.5. A production vehicle with the ICE powertrain replaced by an electric one is classified as Bespoke.

5.23.6. Hydrogen powered fuel-cell hybrid and electric vehicles are prohibited.

5.23.7. These Technical Regulations cover all EVs, but not all regulations apply to all vehicles. For example, the HV safety related requirements do not apply to an mHEV, as these operate at a nominal DC voltage of 48V which is lower than the 60V DC limit (Table 1).

5.23.8. The discipline-specific Sporting Regulations will determine which category of EVs are allowed to compete in which discipline.

5.23.9. Except for Standard EVs in non-Speed Events, all EVs must be in possession of a valid Vehicle Passport to compete. Modified and Bespoke EVs must undergo and pass a Vehicle Passport inspection irrespective of discipline or category.

5.23.10. Electric Vehicle Passports will be issued by Motorsport UK.

5.23.11. See 5.24: EV PASSPORT AND INSPECTION PROCESS for more details.

5.23.12. Additional requirements or restrictions from discipline and/or category specific regulations shall apply

5.24. EV PASSPORT AND INSPECTION PROCESS.

5.24.1. Anyone considering building a Bespoke EV for competition use must supply a project outline, including details/qualification of those engineering the vehicle for review by Motorsport UK Technical Department prior to starting construction. On-going dialogue between the entrant and Motorsport UK throughout the build process is encouraged to minimize the risk of non-compliance with these regulations when vehicle is inspected

5.24.2. Standard EVs may be issued with a Vehicle Passport, without inspection, upon application to Motorsport UK. Modified and Bespoke EVs must undergo and pass a Vehicle Passport inspection and be in possession of a valid Passport to compete irrespective of discipline or category. For a modified production vehicle, the inspection will include a comprehensive visual inspection to ensure that installation of the ROPS and non-powertrain modifications have not compromised the HV system Note: no repositioning of HV components (incl cables) is permitted. For a bespoke vehicle a detailed technical inspection of the entire vehicle including the EV system, and its safety systems will be required. An EVP will be issued once the vehicle has passed the inspection.

5.24.3. See Table 2 for EVP requirements.

5.24.4. Where a Bespoke or Modified OEM EV is intended for a single make/one make series and all vehicles are built/modified by the same organisation, then only the first vehicle in a batch will require full inspection. All subsequent vehicles from the batch will be issued with an EVP following written confirmation by the build organization that the follow-on vehicles are identical to the first vehicle.

5.24.5. Electric Vehicle Inspections must be arranged by appointment with Motorsport UK and will be carried out by a Motorsport UK HV qualified Technical Official.

5.24.6. The entrant must provide all data/evidence to Motorsport UK 3 months prior to the vehicle inspection as summarised below:

(a) RESS impact protection details (5.28.9) if mounted underfloor. RESS Structural calculations or crash test/simulation results (5.28.11).

(b) UN 38.3 and MSDS for cells (5.28.20).

(c) Cell chemistry details (5.28.21).

(d) BMS including cell temperature monitoring details (5.28.25).

(e) Isolation Surveillance System details (5.29.20).

(f) Vehicle specific Emergency Services Guide (5.29.21).

(g) Detailed EV system schematic (5.29.22).

(h) Vehicle specific functional switching diagram (5.30.5).

(i) Crash HV Isolation FMEA (5.30.12).

(j) Details of throttle fail safe system (5.30.18).

(k) Off-board charger details (5.26.1).

(l) On-board charger details (5.31.2).

5.24.7. In addition to the vehicle, the entrant must provide the following to enable the inspection to proceed:

(a) Completed Technical Inspection form.

(b) Detailed Build log with photos of the HV system components and installation.

(c) Photos of the EV components/features to be added to the EVP.

(d) Evidence of team personnel HV qualifications.

(e) An Emergency Services Guide specific to the vehicle undergoing inspection.

(f) The team HV qualified person.

(g) HV tools and safety equipment required to support the inspection.

(h) Example of the off-board charger to be used.

5.24.8. The vehicle will be examined at a location mutually agreed between the entrant and Motorsport UK. If inspection of the EV system requires access to the underside of the vehicle a suitable vehicle hoist or lift will be required. The use of jacks and axle / chassis stands is not permitted. The venue must have a mains power supply suitable for the off-board charger.

5.24.9. A second inspector may be present (for training and/or HV safety reasons) at the inspection.

5.24.10. The entrant will bear all fees arising from and the costs incurred by the inspection.

5.24.11. The entrant is responsible for ensuring that the vehicle satisfies all the Motorsport UK EV requirements and is presented for inspection in a finished and competition-ready condition.

5.24.12. All items on the Inspection Checklist must be clearly visible to the inspector without using instruments such as endoscopes or mirrors. Visible access may be provided by removing body panels or via removable access panels. Covers on the traction battery must only be removed by the nominated team HV qualified person if requested by the technical inspector.

5.24.13. Demonstration of the correct function of the indication and safety systems and the on/off-board charging systems forms part of the inspection. Correct response to a simulated crash event must also be demonstrated by the HV safety system.

5.24.14. The inspection of Bespoke EVs will examine all items included on the EV Inspection Checklist plus any other items the inspector may wish to examine. The exact procedures and instruments employed for inspection and testing are entirely at the discretion of the Technical Inspector.

5.24.15. The Inspection of Modified EVs will focus on ensuring that the installation of the safety items (ROPS, seat, fire extinguisher) has not damaged or disturbed any part of the EV system. It is prohibited to reposition any part of the EV system (including cables).

5.24.16. If any part of the vehicle EV system does not comply with the requirements or is deemed to be a concern, the entrant must correct the problem and re-present the vehicle for inspection. Minor faults may be rectified immediately, major issues will require a new inspection to be arranged and paid for.

5.24.17. The decision of the Motorsport UK inspector concerning compliance with the EV regulations is final and cannot be appealed.

5.25. SCRUTINEERING.

Safety

5.25.1. Only Motorsport UK EV qualified Scrutineers will perform safety scrutineering on EVs.

5.25.2. A valid VP or EVP must be provided at Safety Scrutineering.

5.25.3. HV Vehicle Safety scrutineering procedures will include but not be limited to visual inspection of the EV system and demonstration of the correct function of the safety and indication systems.

5.25.4. The Team HV qualified person must be present at Safety scrutineering equipped with their own set of HV safety equipment and tools as required.

5.25.5. The vehicle specific Emergency Response Guide must be provided to the circuit/venue/organiser's emergency services team before the vehicle is allowed to compete.

5.25.6. Motorsport UK Technical Officials can require the vehicle to be re-inspected at any time during an event.

Eligibility

5.25.7. Only Motorsport UK EV qualified Scrutineers will perform eligibility scrutineering on EVs.

5.25.8. Motorsport UK Technical Officials reserve the right to request access to any set-up information or data from the vehicle ECU(s) and other electrical devices at any time during an event including data that proves compliance with 5.28.3 and 5.28.5.

5.25.9. It is the responsibility of the competitor to prove that the vehicle has not exceeded any control parameter limits during an event (e.g. maximum power, maximum voltage etc.).

5.25.10. Motorsport UK Technical Officials reserve the right to request that the vehicle be fitted with a data logger.

5.25.11. The Team HV qualified person must be present at Eligibility scrutineering (equipped with their own set of HV safety equipment and tools as required) and be prepared to safely isolate the HV system and remove any HV components for more detailed inspection at the request of the Scrutineer.

5.25.12. Sealing requirements for HV system components will be developed and published in due course.

5.26. CHARGING.

5.26.1. Off-board chargers must be commercially available and meet all UK Electrical safety requirements. Details must be supplied to Motorsport UK 3 months prior to the vehicle inspection.

5.26.2. Standard and Modified vehicles must use the unmodified on-board charger, charge port and charging cable(s) supplied with the vehicle.

5.26.3. Charging of the RESS must be done with the battery(s) in-situ.

5.26.4. Any temporary charging installation must be installed and connected to the mains supply by a trained competent person following the Code of practice for Electric Vehicle Charging Equipment Installation, 3rd edition and meet all the requirements of BS7671: 2018 (the 18th Edition wiring regulations), with particular attention paid to earthing.

5.26.5. The charging system must be automatic and must ensure that the battery cannot be overcharged or damaged if left permanently connected to the charger.

5.26.6. The use of diesel or petrol generators to provide the energy to charge EVs is strongly discouraged. Motorsport UK are working with circuit/venue owners to investigate provision of sustainable charging facilities.

IN ADDTION A BESPOKE ELECTRIFIED MUST COMPLY WITH Appendix 2 5.27 – 5.31.

5.27. MOTOR AND INVERTERS.

5.27.1. A maximum of two motors, whose output are combined mechanically driving the wheels through a mechanical gearbox and differential are permitted. A maximum of two inverters are permitted. In Drag Racing there is no limit on the number of motors or inverters.

5.27.2. Only a single driven axle is permitted i.e. FWD or RWD.

5.27.3. Any system that achieves torque vectoring across or between axles is prohibited.

5.27.4. Hub/wheel motors are prohibited.

5.27.5. Only commercially available production motors and inverters are permitted.

5.27.6. Repurposing of OEM motors and inverters is permitted.

5.27.7. The inverter may be integrated with or separate from the motor. The motor may be integrated with or separate from the gearbox.

5.27.8. Brushed DC motors are permitted and motors with exposed commutators must be fitted with a commutator shield.

5.27.9. If the motor or inverter is liquid cooled, >51% water-based coolant must be used. The use of Dielectric fluid is prohibited.

5.27.10. If the motor is air cooled, all ventilation holes must be small enough to prevent the passage of a 12mm diameter spherical test object through all holes.

5.27.11. When an electrical motor casing is rotating around the stator, a scatter shield must be included to surround the rotating parts of the motor. The shield must be constructed from min 2mm steel or 3mm thickness aluminium alloy. Does not apply to motors fully enclosed in the transmission housing.

5.27.12. All motor and inverter connections that use bolted HV terminals must be fitted with moulded insulated terminal covers that are sealed to satisfy a minimum IP65 rating.

5.28. RECHARGEABLE ENERGY STORAGE SYSTEM (RESS).

General

5.28.1. The RESS must be comprised of a maximum of 2 separate traction battery enclosures per vehicle.

5.28.2. Capacitor and flywheel energy storage systems are prohibited.

5.28.3. For Bespoke EVs, the maximum total power going out of the RESS at any time is limited to 250kW, except for Drag Racing where the limit is 1MW.

5.28.4. For National Type Approved EVs, the power out of the RESS may not exceed the homologated power.

5.28.5. For Bespoke EVs, the maximum voltage on the Power Bus must never exceed 450V, except for Drag Racing where the limit is 1000V.

5.28.6. For National Type Approved EVs the maximum voltage must not exceed the homologated maximum voltage.

5.28.7. The RESS must include appropriately specified fuses or circuit breakers to prevent over-current in the event of short circuit. The protection devices must be located inside the RESS as close as possible to the main power bus connectors.

5.28.8. The RESS must be capable of being isolated from the Power Circuit by at least two independent systems (e.g. contactor or a manually operated Service Switch). There must be at least one manually operated system and one automatic system (under control of the BMS or Electronic Control Unit). The Service Switch may be a High Voltage (HV) or Low Voltage (LV) device. Any HV device should be orange and designed such that no HV potential is exposed when the device is operated/removed. If HV Service switches are used, they must be fitted into each battery pack. If a LV switch is used, only one is required (preferably mounted on one of the battery packs). The location of the Service Switch(es) should be clearly marked.

Enclosure

5.28.9. The RESS must be installed within the survival cell, passenger compartment, engine compartment or boot of the vehicle. Underfloor installation of the RESS is permitted if full impact protection is provided to meet the 60kN FIA impact energy requirements. Full details of the impact protection must be provided to Motorsport UK 3 months prior to the vehicle inspection.

5.28.10. The RESS must not be used as a stressed member.

5.28.11. Calculations must be provided to Motorsport UK 3 months prior to the vehicle inspection to confirm that mechanical and electrical safety is ensured in a crash. The RESS may be required to pass a crash test defined by Motorsport UK.

5.28.12. The RESS enclosure must be to a minimum rating of IP65.

5.28.13. Cells/modules must be mechanically secured inside a metallic or composite enclosure. Any covers or access panels must be sealed and secured with fasteners requiring tools to remove.

5.28.14. The RESS must be designed to prevent short circuit of the conductive parts. In the event of compartment or component deformation, the design must ensure that no fluids enter the cockpit/passenger compartment.

5.28.15. The RESS must prevent the build-up of an ignitable gas/air or dust/air concentration inside the compartment by means of a burst valve or vent tube, positioned away from the driver. Any vent tube if fitted, must discharge direct to atmosphere external to the passenger compartment or survival cell.

5.28.16. All HV connections to the RESS must be made using either proprietary HV connectors with High Voltage Interlock Circuitry (HViL) or the cables must pass through HV rated cable glands of suitable size to match the cable and which preserve the IP rating of the external enclosure.

5.28.17. The enclosure containing the cells, must also contain the BMS voltage and temperature sensing elements associated with the cells, service switch, fuses/circuit breakers and contactors.

Cells

5.28.18. Off-the-shelf commercially available cells / modules must be used.

5.28.19. It is prohibited to modify individual cells or off-the-shelf/repurposed OEM battery modules except for the modification of cell tab/connections to enable connection together into modules, fitment of an approved BMS to comply with 5.28.22 and addition of temperature sensors to comply with 5.28.26.

5.28.20. The competitor must supply documents from the Cell/module producer specifying safety relevant data, including manufacturers' datasheet: UN38.3 report and Material Safety Data Sheet (MSDS). Including battery characteristic diagram showing the battery limits of voltage (U), power (W), temperature (T) and State of Charge (SoC). These documents must be provided to Motorsport UK 3 months prior to the vehicle inspection. Equivalent data from a 3rd party test house may be submitted in place of manufacturers data. Evidence of test house capability must be included as part of the submission.

5.28.21. Any type of commercially available cell chemistry is allowed subject to prior agreement from Motorsport UK. Full details of the chemistry and safety handling must be provided to Motorsport UK 3 months prior to the vehicle inspection.

Battery Management System

5.28.22. A Battery Management System (BMS) from an approved supplier is mandatory.

5.28.23. For Modified EVs the architecture of and functionality of the BMS must not be changed from standard.

5.28.24. The BMS must ensure that all cells do not exceed the manufacturers stated limitations for voltage, current and temperature under any circumstances.

5.28.25. The BMS in all cases must monitor every serial cell for voltage and a minimum number of cells (evenly distributed throughout the modules/pack) for temperature in order that the hottest, coldest and average cell temperatures are monitored. Full details of the temperature monitoring must be provided to Motorsport UK 3 months prior to the vehicle inspection.

5.28.26. In the event that any cell exceeds the manufacturers stated limitations for voltage and/or temperature, within 2 seconds the BMS must reduce power to less than 5kW in order to leave the course or automatically isolate the battery from the traction circuit if it is not safe to reduce power.

Cooling

5.28.27. If the RESS is liquid cooled, >51% water-based coolant must be used.

5.28.28. The cooling liquid must not come into direct contact with any active components within the RESS.

5.29. ELECTRICAL EQUIPMENT AND GENERAL ELECTRICAL SAFETY.

5.29.1. Specifications for general electrical safety are laid down in Appendix J – Article 253-18.1.

5.29.2. Specifications for the Power electronics (inverters, DC/DC converters, on-board charger etc.) are laid down in Appendix J – Article 253-18.5.

5.29.3. Any vehicle with an electrical system operating at a voltage exceeding 60V DC or 30V AC must display the label detailed in Section J Drawing 5.14 next to all competition numbers. Label minimum size 75mm x 75mm x 75mm.

5.29.4. In cases where the voltage of the Power Circuit belongs to voltage class B (2.9), symbols warning of "High Voltage" must be displayed on or near the protective covers of all electrical equipment that may operate at high voltage (Drawing 5). The symbol background must be yellow, and the bordering and the arrow must be black, in accordance with ISO 7010. Each side of the triangle should measure at least 120mm but may be reduced to fit onto small components.

5.29.5. No HV potential should be exposed anywhere on the vehicle during normal operation.

5.29.6. The design of the system must be such to ensure that a single point of failure cannot cause an electric shock hazardous to life.

5.29.7. HV Electrical cables and electrical equipment must be protected against any risk of mechanical damage (stones, corrosion, mechanical failure, etc.) as well as any risk of fire and electrical shock.

5.29.8. The voltage class B components and wiring must comply with the applicable sections of IEC 60664 on clearances, creepage distances (3.4.2) and solid insulation; or meet the withstand voltage capability according to the withstand voltage test given in ISO/DIS 6469-3.2:2010.

5.29.9. A plug must physically only be able to mate with the correct socket of any sockets within reach. All HV Power Circuit connectors must not have live contacts on either the plug or the receptacle unless they are correctly mated.

5.29.10. All parts of the electrical equipment must be protected using an appropriate IP class with min IP65 protection on all HV components.

5.29.11. The HV traction circuit must be isolated from the vehicle chassis.

5.29.12. All HV cabling must comply with LV 216-2, ISO 6722 and ISO 14572 Construction of HV wiring systems for hybrid and electric vehicles. All cables must be orange and shielded, either internally or by conduit and must be securely fixed to the vehicle chassis using insulated fixings. Tie wraps are not acceptable. Cable conductor material must be copper. The use of aluminium bus bars and terminals is permitted.

5.29.13. All cable terminals must be crimped, or laser welded with a certificate of conformity if not OEM produced. The use of soldered terminals is prohibited.

5.29.14. All HV cable runs must be a single contiguous piece of cable between connectors / terminals. Any cable joins or splices must be achieved using bolted terminals securely fixed in a min IP65 rated enclosure with glands/strain relief on the cable entry points. Any covers or access panels must be sealed and secured with fasteners requiring tools to remove.

5.29.15. Any HV ancillary equipment (contactors, relays, fuses, current shunts etc.) not located in the battery enclosure(s) must be securely located in a min IP65 rated enclosure with glands/strain relief on the cable entry points. Any covers or access panels must be sealed and secured with fasteners requiring tools to remove.

5.29.16. All Class B Power Circuit connectors must not have live contacts on either the plug or the receptacle unless they are correctly mated. An automatic HViL (High Voltage Interlock) system must be present in every HV connector and detect if a Power Circuit connector is de-mated, for example with shorter alarm contacts within the same connector and inhibit/remove High Voltage from both the plug and the receptacle. If the connector was live when de-mated, the high voltage must be switched off immediately and any residual voltage on the contacts of both the plug and the receptacle discharged to <60V DC within 4 seconds. Re-mating of the connector must not re-energise the circuit.

5.29.17. All class B Power Circuit connectors and cabling must provide mechanism for locking, strain relief and sealing to the cable assembly.

5.29.18. All major conductive parts of the body must be connected e.g. with wires of appropriate dimension to obtain equipotential bonding.

5.29.19. No part of the chassis or bodywork should be used as a current return path.

5.29.20. The distribution of high currents in the HV DC network must be made in a star-point configuration and not in a loop, in order to avoid potential shifts resulting from current flows. The star-point of the electrical reference potential is referred to as "Power Circuit Ground".

5.29.21. Every part of the electrical equipment must have a minimum insulation resistance between all live components and earth of 500 Ohms per volt. The measurement of the insulation resistance must be carried out using a DC voltage of at least 100 volts.

5.29.22. Unless the function is already provided by the BMS, a proprietary isolation surveillance system must be used to continuously monitor the status of the isolation barrier between the voltage class B (2.9) system and the chassis while the HV system is energised.

5.29.23. If not part of the BMS, the proprietary isolation surveillance system must be located within the battery enclosure and wired in series with the main battery contactors. If an isolation fault is detected, the system shall open the circuit breaker automatically and trigger the "Danger" state of the RESS Status Indicator. Full details of the isolation surveillance system must be provided to Motorsport UK 3 months prior to the vehicle inspection.

5.29.24. The competitor must provide a detailed "Emergency Services Guide" documenting all aspects of the HV system including component locations and details of the standard and emergency HV isolation procedures. This document should be structured in the same way and have similar content to the guides provided by OEM's for production EVs and must be provided to Motorsport UK 3 months prior to the vehicle inspection.

5.29.25. See Drawing 1 for an example of the EV System Schematic showing all components and connections. The vehicle specific version must be provided to Motorsport UK 3 months prior to the vehicle inspection.

5.29.26. On vehicles without a 12v alternator, a DC/DC converter of suitable power rating must be provided to charge the auxiliary battery and electrical system.

5.29.27. The auxiliary battery must never be used to recharge the traction battery.

5.30. SAFETY EQUIPMENT.

Driver master switch

5.30.1. All vehicles must be equipped with a general circuit breaker, of sufficient capacity and which can be operated easily by a switch from the driver's seat when the driver is seated in a normal and upright position, with the safety belts fastened and the steering wheel in place, and from the outside, to cut off all electric transmission devices.

5.30.2. This switch MUST act as a General Circuit Breaker that interrupts ALL electrical transmission between the RESS and all other HV circuits by means of a spark-proof circuit breaker providing galvanic switching which MUST NOT be short-circuited by any components such as a pre-charge resistor. Low power batteries provided for low voltage circuits, for example auxiliary circuits, do not have to be isolated by the general circuit breaker provided that they are completely isolated from the main power accumulators.

5.30.3. In the event that the circuit breaker is activated, the HV potential, outside the RESS, must drop below 60V DC with 4 seconds.

5.30.4. Specifications for the General Circuit Breaker are laid down in Appendix J – Article 253 18.17.

Fire Extinguisher

5.30.5. All cars must be equipped with a plumbed in extinguishing system with nozzles discharging into the Cockpit and onto the Motor(s) and Inverter. Only ABC extinguisher types compatible with the battery chemistry and specified for the voltage level at the power bus are allowed.

Extinguisher switches

5.30.6. There must be two exterior actuators. These actuators must be situated at the base of the main rollover structure on both sides of the vehicle for a single seater or at the lower corners of the windscreen for a closed cockpit vehicle.

5.30.7. A means of triggering from the outside must be combined with the general circuit breaker switches.

5.30.8. The actuators must be marked with a letter "E" in red at least 80mm high, with a line thickness of at least 8mm, inside a white circle of at least 100mm diameter with a red edge with a line thickness of at least 4mm. See Drawing 3 for an example.

Marshal Neutral Switch

5.30.9. To enable a marshal to isolate the RESS from the power bus in less than 2 seconds, external switch(es) which operate the general circuit breaker must be provided, which:

5.30.9.1. For a single seater, a single switch must face upwards and be recessed into the top of the survival cell no more than 150mm from the vehicle centre line and less than 150mm from the front of the cockpit opening and less than 70mm from the extinguisher switches defined in 5.29.6.

5.30.9.2. For a saloon, two switches must face upwards and be recessed into the windscreen scuttle on either side, no more than 150mm from the side of the vehicle, 350mm from the door aperture and less than 70mm from the extinguisher switches defined in 5.29.6.

5.30.9.3. Each switch must be designed such that the power circuit cannot be accidentally re-energized.

5.30.9.4. Each switch must be marked with a red spark in white edged blue triangle with a base of at least 120mm. The angle of the triangle where the spark is pointing to, must point to the button. It must be associated with a letter "N" in blue inside a white circle at least 50mm in diameter and with a blue edge. The height of both symbols must be at least 100mm. See Drawing 4 for an example.

5.30.10. It is prohibited to cover the external switches in any way whatsoever.

5.30.11. In a crash, all energy sources of the Power Circuit must be switched off automatically and the full RESS must be isolated. The arrangements must be validated by the Failure Mode and Effects Analysis (FMEA) which must be provided to Motorsport UK 3 months prior to the vehicle inspection. An FIA approved Accident Data Recorder may be used to initiate the shutdown.

5.30.12. All switches (Driver Master, Neutral and Extinguisher) must operate at a nominal 12V.

5.30.13. See Drawing 2 for an example of the functional switching diagram. The vehicle specific version must be provided to Motorsport UK 3 months prior to the vehicle inspection.

5.30.14. Safety Indicator requirements are based on the specifications laid down in Appendix J – Article 253 18.22.

5.30.15. All indicators must have a viewing angle of at least 120° and a luminous flux of at least 8 lumens.

HV RESS status light

5.30.16. All Bespoke vehicles with a HV RESS must be fitted with a HV RESS Status indicator light, which:

5.30.16.1. Is a Red/Green light that indicates the safety status of the RESS.

5.30.16.2. Must be in working order throughout the event even if power on the vehicle has failed.

5.30.16.3. For a single seater, faces upwards and is recessed into the top of the survival cell no more than 200 mm from the vehicle centre line and the front of the cockpit opening.

5.30.16.4. For a saloon vehicle, is fitted centrally at the base of the windscreen with a repeater fitted at the base of the rear screen. Both lights must be clearly visible from a distance of 5 meters.

5.30.16.5. Remains powered for at least 15 minutes after the general circuit breaker is activated.

5.30.16.6. Is marked with a "HIGH VOLTAGE" symbol (see Drawing 5).

5.30.16.7. Has repeater indicator light on the dashboard the replicates the states of the main light. This does not have to comply with 5.28.13.

5.30.16.8. See Table 3 for the HV RESS Status indicator states.

Ready-to-Move-light

5.30.17. All Bespoke EVs that have an EV system that is capable of propelling the vehicle must be fitted with a Ready-to-Move light, which:

5.30.17.1. Is a white light that will illuminate to indicate that the vehicle can move if the throttle pedal is pressed.

5.30.17.2. For a single seater, faces forward and is fitted to the top of the roll hoop.

5.30.17.3. For a saloon vehicle, is fitted to the front roll over structure to be visible through the windscreen.

5.30.17.4. Will flash "on" for 0.05 seconds and "off" for 2 seconds whilst the vehicle is charging.

5.30.17.5. Will flash "on" for 0.5 seconds and "off" for 0.5 seconds if, when the system has been requested to energize and the bus voltage has not exceeded 50V.

5.30.17.6. See Table 4 for the Ready-To-Move indicator states.

Throttle failsafe

5.30.18. All Bespoke vehicles must be equipped with a throttle fail safe system, which in case the throttle and brake pedal are pressed at the same time, overrides the throttle and cuts the power to the propulsion system. The details of the fail-safe system must be provided to Motorsport UK 3 months prior to the vehicle inspection.

5.31. BESPOKE VEHICLE CHARGING.

5.31.1. Bespoke vehicles must use a charging system compliant with a recognised charging standard and be able to use public chargers (SAE J1772, IEC 62196, CHAdeMO or Combined Charging System (CCS)) and must follow standard protocols for connecting/disconnecting the charge connector and initiating/stopping the charging process. Only a single external charge port is permitted.

5.31.2. Bespoke vehicles must use a commercially available on-board charger (if fitted) and if liquid cooled, >51% water-based coolant must be used. Details must be provided to Motorsport UK 3 months prior to the vehicle inspection.

Appendix 3: Tables and Diagrams for Electrified Vehicles

Table 1: Regulation Summary

Regulation	Description	EV Tech Regs Applicability			
		mHEV	HEV	PHEV	BEV
		LV	*HV*	*HV*	*HV*
Section B: Nomenclature and Definitions		*Y*	*Y*	*Y*	*Y*
Section J: Competitors Vehicles		*Y*	*Y*	*Y*	*Y*
Section J: Appendix 2 Electrified Vehicles Technical Regulations					
5.22	Electrified Vehicles	*Y*	*Y*	*Y*	*Y*
5.23	Permitted Vehicles	*Y*	*Y*	*Y*	*Y*
5.24	EV Passport and Inspection	*Y*	*Y*	*Y*	*Y*
5.25	Scrutineering	*Y*	*Y*	*Y*	*Y*
5.26	Charging	*Y*	*Y*	*Y*	*Y*
	Bespoke BEVs				
5.27	Motors	*n/a*	*n/a*	*n/a*	*Y*
5.28	Rechargeable Energy Storage Systems	*n/a*	*n/a*	*n/a*	*Y*
5.29	Electrical Equipment and General Electrical Safety	*n/a*	*n/a*	*n/a*	*Y*
5.30	Safety Equipment	*n/a*	*n/a*	*n/a*	*Y*
5.31	Bespoke Vehicle Charging	*n/a*	*n/a*	*n/a*	*Y*

Table 2: Permitted Electrified Vehicle Types

Vehicle Type	Permitted EV's				EV Inspection				Vehicle Passport Requirement			
	mHEV	HEV	PHEV	BEV	mHEV	HEV	PHEV	BEV	mHEV	HEV	PHEV	BEV
	LV	*HV*	*HV*	*HV*	*LV*	*HV*	*HV*	*HV*	*LV*	*HV*	*HV*	*HV*
Standard Electrified Vehicle 5.23.2	Y	Y	Y	Y	N	N	N	N	VP	VP	VP	VP
Modified Electrified Vehicle 5.23.3	Y	Y	Y	Y	Y 2/.	Y 2/.	Y 2/.	Y 2/.	EVP	EVP	EVP	EVP
Bespoke Electrified Vehicle 5.23.4	N	N	N	Y	n/a	n/a	n/a	Y 3/.	n/a	n/a	n/a	EVP

Key:

mHEV = Mild hybrid
HEV = Hybrid
PHEV = Plug-in hybrid
BEV = Battery electric vehicle
LV = Low voltage (<30V AC or 60V DC)
HV = High voltage (>30V AC or 60V DC)
VP = Vehicle Passport (existing)
EVP = Electric Vehicle Passport (new)

Notes:

1/. Category or discipline specific regulations may impose further restriction on permitted vehicles
2/. Submission of OEM vehicle specific Emergency Services Guide and visual inspection only
3/. Full submission of all data requirements contained in EV Tech Regs plus visual and technical inspection and functional test

Table 3: HV RESS Status indicator states

Light Status	RESS Status
Green	Safe
Red	Danger (Isolation fault)

Table 4: Ready-to-move indicator states

Light Status	Vehicle Status
Off	HV system de-energised
White always on	HV system energised – vehicle ready to move
White flashing	Charging

Table 5: Table of Electrified Vehicle Safety Requirements

Equipment Who/Where	HV Gloves (Inner & Outer)	Insulated Rescue Pole	Arcflash Helmet	Portable Defibrillator	Voltage Proving, Insulation Measuring & Infra-red Temperature Measuring Device	Insulation Tools	Special Tools (service disconnect)	Vehicle Specific Emergency Service Guide	EV Capable Extinguisher (e.g. F500)
Rescue Crew	x				x				
Rescue Unit	x (spare set)	x	x	x	x	as required – minimum is set of insulated cable cutters for cutting safety loop		x (each unit)	x
EV Scrutineer	x				x (only if trained)				
Scrutineering Bay	x	x	x	recommended					x
Designated Charging Area	x	x	x	recommended					x
Team	x	x	x	recommended				**x** (for each vehicle)	recommended
Team HV Representative (bespoke vehicles)	x		x		x	as required	as required	x	

Drawing 2: Functional switching diagram example

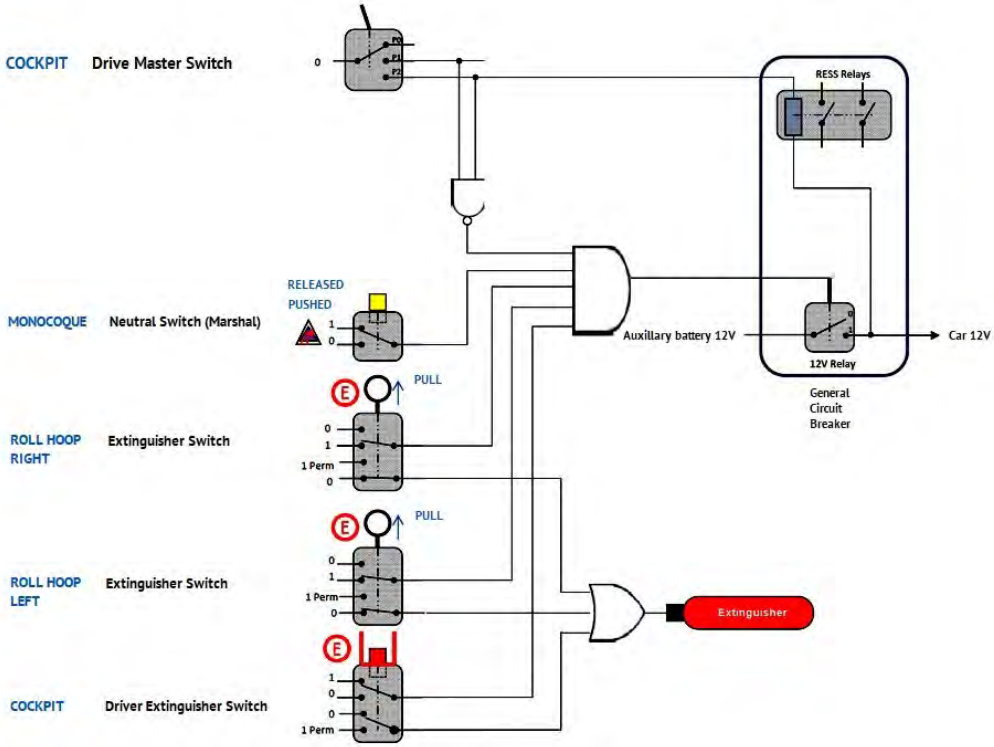

Drawing 3: Fire Extinguisher Warning Symbol

Drawing 4: Marshal Neutral Switch Warning Symbol

Drawing 5: High Voltage Warning Symbol

(K) Competitors: Safety

Reference should be made to the appropriate sections in the specific regulations as to which of the following are mandatory or recommended for any particular branch of motor sport.

Roll-Over Protection Systems

Introduction

1. The following are various specifications and configurations that can be used in manufacturing, preparing and installing Roll-Over Protection Systems (ROPS) into Production Cars, Touring Cars Saloon and Sports Cars (1.6.1), Sports Racing Cars (1.6.2), Single Seaters (1.6.3), and other forms of Competition Vehicles (1.6.4). The details covered in this section give many permutations, the Motorsport UK mandatory requirements are the minimum acceptable. Care should be taken to check FIA International requirements for Groups, Classes and Formulae which may not be covered by this section, which is for Motorsport UK National 'A' and lower status events.

Definitions

1.1.1. Safety Cage. A structural framework designed to prevent serious bodyshell deformation in the case of a collision or a car turning over.

1.1.2. Rollbar. Structural frame or hoop and mounting points.

1.1.3. Rollcage. Structural framework made up of a main rollbar and a front rollbar (or two lateral rollbars), their connecting members, one diagonal member, backstays and mounting points (see drawings K5 and K6).

1.1.4. Main Rollbar. Structure consisting of a near-vertical frame or hoop located across the vehicle just behind the front seats.

1.1.5. Front Rollbar. Similar to main rollbar but its shape follows the windscreen pillars and top screen edge.

1.1.6. Lateral Rollbar. Structure consisting of a near-vertical frame or hoop located along the right or left hand side of the vehicle. The rear legs of a lateral rollbar must be just behind the front seats. The front leg must be against the screen pillar and dashboard such that it does not unduly impede entry or exit of driver or co-driver.

1.1.7. Longitudinal Member. Longitudinal tube which is not a part of the main, front or lateral rollbar, for example, a backstay.

1.1.8. Diagonal Member. Transverse tube between a top corner of the main rollbar or upper end of a backstay and a lower mounting point on the opposite side of the rollbar or backstay.

1.1.9. Framework Reinforcement. Reinforcing member fixed to the rollcage to improve its structural efficiency.

1.1.10. Reinforcement Plate. Metal plate fixed to the bodyshell or chassis structure under a rollbar mounting foot to spread load into the structure.

1.1.11. Mounting Foot. Plate welded to a rollbar tube to permit its bolting or welding to the bodyshell or chassis structure, usually onto a reinforcement plate.

1.1.12. Removable Members. Structural members of a safety cage which are able to be removed.

1.1.13. Harness Bar. A transverse tubular member attached across either the main hoop or backstays to accept harness mountings.

Specifications

1.2.1. ROPS must be designed and made so that, when correctly installed, they substantially reduce the risk of injury to the occupants. The essential features of an efficient ROPS are that it is designed to suit the particular vehicle, is of sound construction, has adequate mountings and is a close fit to the bodyshell.

1.2.2. The ROPS must not unduly impede Driver and Co-Driver access to the vehicle. Members may intrude into the interior space by passing through the dashboard, front side trim, rear side trim, and rear seats which may be folded down. ROPS must not extend beyond the front upper or rear suspension mounting points of the vehicle, with the exception of backstays which may extend beyond the rear suspension mounting points if necessary to achieve the required 30° angle. Any modification to a homologated ROPS (other than fitment of Roof Reinforcement, Windscreen Pillar Reinforcement, Doorbars and Harness Bars) is prohibited. Tubes must not carry any liquids or gases, other than air at atmospheric pressure, or any other item.

1.2.3. Compulsory Diagonal Member. Different ways of fitting the compulsory diagonal member (see drawings K5 and K6). The combination of several members is permitted.

1.2.4. Optional Reinforcing Members. Each type of reinforcement (see drawings K7 to K12) may be used separately or combined with others.

1.2.5. Deleted.

Note: Throughout these sections an asterisk(*) indicates a requirement for additional information to be printed in the Supplementary Regulations (SRs). Text shown in Italics indicate a Regulation which may be amended in the SRs. Text shown in red indicates a new or amended regulation for 2022.

CAGED LASER ENGINEERING

Automotive Engineering and Fabrication Specialists
Bespoke & Standard Roll Cages

ROLL CAGE FABRICATION | CHASSIS FABRICATION | RACE CAR PREP | PIT EQUIPMENT | POWDER COATING | MACHINING | SHEET METAL WORK | CNC FOLDING | LASER CUTTING | DESIGN

Market leaders in roll cage and chassis fabrication

Producing bespoke and standard roll cages, designed, manufactured and finished to the highest standard all under one roof

All roll cages are MSA & FIA approved

motorsport uk

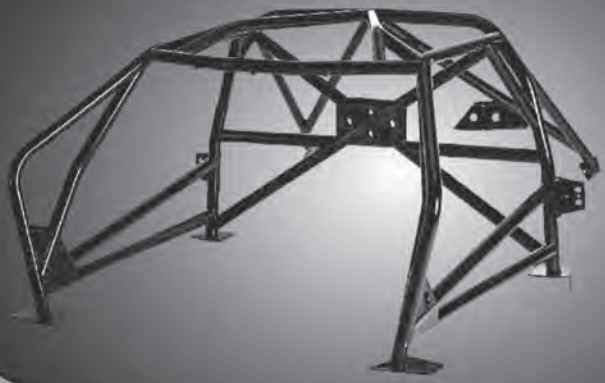

Unit 12
Ash Farm
Business Park
Holcombe
Radstock
BA3 5EX

+44 (0) 1761 239133
info@cagedlaser.co.uk
www.cagedlaser.co.uk

Technical Specifications

1.3.1. Main, Front and Lateral Rollbars. These frames or hoops must be made in one piece without joints. Their construction must be smooth and even, without ripples or cracks. The vertical part of the main rollbar must be as straight as possible and as close as possible to the interior contour of the bodyshell. The front leg of the front rollbar or a lateral rollbar must be straight, or if it is not possible, must follow the windscreen pillars and have only one bend unless a windscreen pillar reinforcement [1.3.5(e)] is fitted.

The mounting foot must not be rearward of the foremost point of the rollbar.

Where the main rollbar forms the rear legs of a lateral rollbar (see drawing K6), the connection to the lateral rollbar must be at roof level. To achieve an efficient mounting to the bodyshell, the original interior trim may be modified around the safety cage and its mountings by cutting it away or by distortion. However, this modification does not permit the removal of the complete parts of upholstery or trim. Where necessary, the fusebox may be relocated to enable a rollcage to be fitted.

1.3.2. Mounting of ROPS to the Bodyshell.

Minimum mountings are:

1 for each leg of the main or lateral rollbar.

1 for each leg of the front rollbar.

1 for each backstay (see 1.3.3).

Each leg of a main, lateral or front rollbar must be attached, via a mounting foot, by at least three bolts, minimum M8 ISO grade 8.8 and utilising a steel reinforcement plate of a material of at least the same thickness as the wall of the tube to which it is being welded (minimum 3mm) and of at least 120cm2 area which is welded to the bodyshell (see drawings K13 to K18). The mounting foot or leg may alternatively be welded directly to the bodyshell/reinforcement plate in accordance with drawing K13.

1.3.3. Backstays. These are compulsory and must be attached near the roofline and near the top outer bends of the main rollbar on both sides of the car. They must make an angle of at least 30° with the vertical, must run rearwards and be straight and as close as possible to the interior side panels of the bodyshell. Their materials specification, diameter and thickness must be as defined in 1.4.1. Forward facing stays are permitted if an angle of 30° cannot be achieved with Backstays, providing they do not unduly impede Driver and Co-Driver access to the vehicle.

Their mountings must be reinforced by plates. Each backstay should be secured by bolts having a cumulative section area at least two thirds of that recommended for each rollbar leg mounting in 1.3.2 above, and with identical reinforcement plates of a least 60cm^2 area (see drawing K13). A single bolt in double shear is permitted, providing it is of adequate section and strength (see drawing K20) and provided that a bush is welded into the backstay.

The mounting foot or backstay may alternatively be welded directly to the bodyshell/reinforcement plate in accordance with drawing K13.

1.3.4. Diagonal Members. At least one diagonal member must be fitted. Their location must be in accordance with drawings K5 or K6 and they must be straight. The combination of several diagonal members is permitted.

Where two diagonals in the form of a cross are used, at least one of the diagonals must be a single piece tube.

The attachment points of the diagonal members must be so located that they cannot cause injuries. They may be made removable but must be in place during events. The lower end of the diagonal must join the main rollbar or back-stay not further than 100mm from the mounting foot. The upper end must join the main rollbar not further than 100mm from the junction of the backstay joint, or the backstay not more than 100mm from its junction with the main rollbar.

They must comply with the minimum specification set out in 1.4.1. A diagonal member fixed to the bodyshell must have reinforcement plates as defined in 1.3.3.

1.3.5. Optional Reinforcement of ROPS. The diameter, thickness and material of reinforcements must be as defined in 1.4.1. They must be either welded in position or installed by means of demountable joints. Reinforcement tubes must not be attached to the bodyshell.

(a) Transverse Reinforcing Members:

The fitting of two transverse members as shown in drawing K9 is permitted. The transverse member fixed to the front rollbar must not encroach upon the space reserved for the driver or co-driver. It must be placed as high as possible but its lower edge must not be higher than the top of the dashboard.

(b) Doorbars (for side protection):

Longitudinal members must be fitted at each side of the vehicle (see drawings K9 and K12). They may be removable.

The side protection must be as high as possible but not higher than one half of the total height of the door aperture measured from its base.

Where two members in the form of a cross are used, at least one of the members must be a single piece tube.

Where configuration 12(j) is used a reinforcing gusset must connect the tubes along the horizontal length.

(c) Roof Reinforcement:
Reinforcing the upper part of the rollcage by adding members as shown in drawing K10 is permitted.

(d) Reinforcement of bends and junctions:
The reinforcement of the junction between the main rollbar or the front rollbar and the longitudinal members is permitted as shown in drawing K12 as is the reinforcement of the top rear bends of the lateral rollbars.

The ends of these reinforcing tubes must not be more than half way down or along the members to which they are attached.

(e) Windscreen Pillar Reinforcement:
A tube the upper end of which must be less than 100mm from the junction between the front (lateral) rollbar and the longitudinal (transversal) member and the lower end less than 100mm from the front mounting foot of the front (lateral) rollbar, as shown in drawing K62.

The tube may be bent on condition that it is straight in side view and that the angle of the bend does not exceed 20°.

1.3.6. Protective Padding. Where the driver's or co-driver's bodies or crash helmets could come into contact with the ROPS, non-flammable padding should be provided for protection (1.6.6).

CUSTOM CAGES

motor sport UK

FIA

QMS ISO 9001 : 2015 REGISTERED

ROLL CAGE INNOVATORS

FOR OVER 30 YEARS • FOR EVERY MOTORSPORT LEVEL • 550+ DESIGNS

NATIONAL

INTERNATIONAL

HISTORIC

TRACK DAY

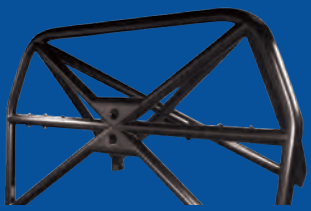

BESPOKE

ADVANCED ENGINEERING

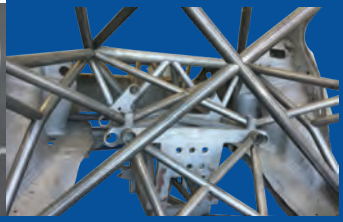

Custom Cages are industry leaders in design, installation and supply of world class roll cage kits

- Roll cage kits
- Roll cage fitting
- Body prep
- Tube bending
- Laser cutting
- CAD expertise

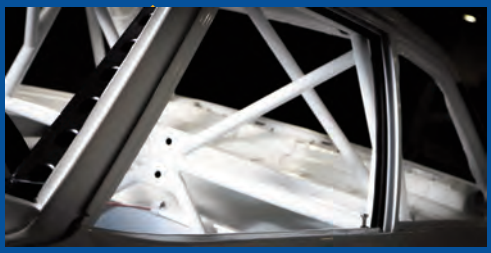

For sales and advice 01327 872855

www.customcages.co.uk • sales@customcages.co.uk

1.3.7. Removable Members. Should removable members be used in the construction of a ROPS, the demountable joints used must comply with an approved type (see drawings K21 to K30). The screws and bolts must be of adequate diameter and of ISO Standard 8.8 or better. FIA homologated demountable joints are also permitted.

Demountable joints must not be used as part of a main, front or lateral rollbar because they act as hinges in the principal structure and allow deformation. Their use is solely for attaching members to the rollbars and for attaching a lateral rollbar to a main rollbar (see drawing K2). In this last case, hinged joints in drawings K21 to K30 must not be used.

1.3.8. Guidance on Welding. All welding should be of the highest possible quality with full penetration and preferably using a gas shielded arc. Although good external appearance of a weld does not necessarily guarantee its quality, poor looking welds are never a sign of good workmanship. When using heat-treated steel the instructions of the manufacturer must be followed (special electrodes, gas protected welding). It is to be emphasised that the use of heat-treated or medium carbon steels may cause problems and that bad fabrication may result in a decrease in strength (caused by brittle heat-affected zones) or inadequate ductility.

1.3.9. Harness Bars. Minimum dimensions 38mm x 2.5mm or 40mm x 2.0mm. Cold Drawn Seamless Carbon Steel with minimum tensile strength of 350N/mm2. Harness straps may be attached by looping around the tube or by threaded fixings using inserts as drawing No. 44 welded into the tubes(s).

Material Specifications

1.4.1. Specifications of the tubes used:

Material

Cold Drawn Seamless Unalloyed Carbon Steel, containing a maximum of 0.3% of carbon.

Note: For an unalloyed carbon steel the maximum content of additives is 1.7% for manganese and 0.6% for other elements.

Minimum Yield Strength

350 N/mm2

Minimum Dimensions (Ø in mm)

(a) Mandatory tubular members

45 x 2.5 (1.75" x 0.095") or 50 x 2.0 (2.0" x 0.083").

38 x 2.5 (1.5" x 0.095") or 40 x 2.0 (1.6" x 0.083"). (For roll cages/bars approved prior to 1.1.95).

(b) Optional tubular members

38 x 2.5 (1.5" x 0.095") or 40 x 2.0 (1.6" x 0.083").

1.4.2. In selecting the steel, attention must be paid to obtaining good elongation properties and adequate weldability.

1.4.3. The tubing must be bent by a cold working process and the centreline bend radius must be at least three times the tube diameter. If the tubing is ovalised during bending, the ratio of minor to major diameter must be 0.9 or greater.

Exceptions

The only exceptions to the foregoing requirements for Saloon, single seater and Sports Cars are as follows:

1.5.1. ROPS manufacturers may make application to Motorsport UK for a Roll Over Protection System (ROPS) Certificate to be issued.

Note: ROPS manufacturers wishing to make application for such a certificate should contact the Motorsport UK Technical Department in order to obtain details of the requirements to be met and the fees payable. Subject to these requirements being met a ROPS Certificate will be raised and issued. Duly authorised copies of this certificate containing a drawing, photographs, a copy of the manufacturers declaration that the ROPS meets the required regulations should be available to event Scrutineers.

1.5.2. Each ROPS manufactured after 1.1.97 for which Motorsport UK or the FIA has issued a ROPS (Rollcage) Certificate must bear an identification plate which details the manufacturer and the manufacturer's part number allocated to the cage. Details of this identity plate are to be included on the ROPS (Rollcage) certificate.

Vehicle Categories Covered

1.6.1. Series Production, Touring and Sports Cars.

(a) Production cars, Touring Cars, Sports cars up to 2,000cc – Basic rollbar/rollcage complying with K1 or K2.

(b) Production Cars and Touring Cars over 2,000cc – Rollbar/rollcage complying with K3 or K4.

(c) Sports cars over 2,000cc – Rollbar/rollcage complying with K3 or K4 or K60(i) & (ii) and K31.

The different possibilities of installing the optional reinforcing members to the rollcage are shown in drawings K7 to K12.

Each type of reinforcement (drawings to K7 to K12) may be used separately or combined with one or several others).

These reinforcements can be installed in each of the basic rollcages (drawings K1 to K4).

Material

As defined in 1.4.

Note: For all the ROPS which are FIA homologated after 1.1.2000 for Touring cars, the presence of the ROPS in the door aperture must comply with the following criteria (see drawing No. 43 in this section).

Dimension A must be a minimum of 300mm.

Dimension B must be a maximum of 250mm.

Dimension C must be a maximum of 300mm.

Dimension D (Measured from the upper corner of the windscreen, without the seal) must be a maximum of 100mm.

Dimension E must not be more than half height of the door aperture.

Motorsport UK Certified and non-homologated ROPS constructed after 1.1.2001 in accordance with drawing 12 must also comply with the above dimensions.

Vehicles of Periods A-Z as defined within the current FIA yearbook for which a valid FIA Historic Technical Passport (HTP) has been issued – be fitted with a rollbar/rollcage as specified within the HTP issued for each individual vehicle and with that vehicle being in compliance with that specification.

1.6.2. Sports Racing Cars

The rollbar must conform to drawings K60(i) and K31. Forward facing stays are permitted for open Sports Racing Cars.

Minimum height 92cm measured along the line of the driver's spine from the bottom of the car seat.

50 YEARS OF ROLL OVER PROTECTION

Roll Cages | FIA/MSUK Homologated designs | 2500+ modern and historic solutions
Tier 1 OEM Supplier | Engineering Design Services | In-House Laser Scanning

AUTOMOTIVE | MOTORSPORT | 4x4 | MILITARY | FLEET | EXPEDITION | EMERGENCY SERVICES

Safety Devices International Ltd
Cambridge House | Holborn Avenue | Mildenhall | Suffolk, IP28 7AN
+44 (0) 1638 713 606 motorsport@safetydevices.com www.safetydevices.com
@SafetyDevicesIntl @SafetyDevices safetydevices SafetyDevicesLtd

Material

Cold drawn seamless Carbon Steel 350N/mm^2

Minimum dimensions (mm)

45 x 2.5 (1.75in x 0.095in) or

50 x 2.0mm (2.00in x 0.083in).

1.6.3. Single Seater Racing Cars

The rollbar must be symmetrical about the lengthwise centre-line of the car and of minimum height 90cm measured vertically from the base of the cockpit or 92cm measured along the line of the driver's spine from the bottom of the car seat. There must be at least one brace rearwards from the top of the rollbar at an angle not exceeding 60° with the horizontal, this brace must be the same diameter as the rollbar, if two braces are fitted to the tube the diameter may be reduced to 26mm x 2.5mm (1in x 0.095in). Where two braces are fitted, they may be rearward or forward facing.

The width inside the roll-over bar main tubes must be 38cm minimum measured 60cm above the base of the seat. It must incorporate a crossbrace to restrain the driver's head and give rearward support. The top hoop radius must not be less than 10cm measured at the centre line of the tube.

Material

Cold drawn seamless Carbon steel 350N/mm^2

Minimum dimensions (mm)

Vehicles up to 470kg:

38 x 2.5 (1.5in x 0.095in) or

40 x 2.0 (1.6in x 0.083in).

Vehicles 470kg and over:

45 x 2.5 (1.75in x 0.095in) or

50 x 2.0 (2.0in x 0.083in).

1.6.4. Other Considerations

(a) An effective rollbar must be fitted with its top edge not less than 5cm above the helmet of the normally seated driver. It must be wider than the driver's shoulders at that height. It must be constructed of good quality seamless steel tubing of minimum 35mm diameter and wall thickness of 2mm. It should have the top bar straight or slightly curved but no tubes meeting in an inverted 'V'. It must be effectively braced to structural members.

(b) Non-standard cars are advised to fit a rollbar to the following minimum requirements. Minimum height 72cm from the rear of the uncompressed seat cushion. It must have minimum flat width of 38cm running into radiused corners and affording driver and passenger equal protection.

It must be effectively mounted and braced to structural members forward and aft of the cockpit and not less than cockpit width. It must be constructed of good quality seamless steel tubing of minimum 32mm diameter and wall thickness of 1.5mm.

1.6.5. ALL aluminium alloy Roll Cages are prohibited.

1.6.6. It is recommended that rollbar/rollcage tubes within 150mm of a vehicle occupant's helmet are covered with a suitable energy absorbing material. A number of suitable materials are homologated by the FIA who publish specific regulations for the fitment of such materials for vehicles participating in International Events.

Aerodynamics

1.7. The use of a rollbar to achieve or supplement aerodynamic effects is prohibited.

Future

1.8. It is to be noted that the FIA publishes Regulations concerning ROPS for use in International competition. Motorsport UK aligns itself with these regulations wherever possible.

Seats, Seat Belts and Headrests

2.1. All seat safety belts must be complete units sourced from a recognised manufacturer and fitted in accordance with the manufacturers' instructions, Motorsport UK recommendations or FIA requirements. (See Drawing Nos. 39, 40, 41, 42 and 44.)

Where the vehicle manufacturer's standard safety belts and associated fitments are not utilised, bolts must be steel and of a minimum 7/16in UNF or M12 (grade 8.8) or, for an FIA homologated harness, as specified by the harness manufacturer.

2.1.1. Three point. Either one diagonal shoulder strap and one lap strap, or two merged shoulder straps and one lap strap bearing an ECE 'E' mark. With three anchorage points on the chassis/body shell or roll over bar of the vehicle on either side and to the rear of the driver's seat.

2.1.2. Four point. Two shoulder straps and one lap strap, with four anchorage points on the chassis/body shell or roll over bar of the vehicle, one either side of the driver and two to the rear of the driver's seat.

2.1.3. Five point. Two shoulder straps, one lap strap and one strap between the legs with five anchorage points on the chassis/body shell or roll over bar of the vehicle, one either side of the driver, two to the rear of the driver's seat and one between the legs.

2.1.4. Six Point. Two shoulder straps, one lap strap and two straps between the legs, with six anchorage points on the chassis/body shell or roll over bar of the vehicle, one either side of the driver, two to the rear of the driver's seat and two between the legs.

2.1.5. Where safety harnesses are mandatory it is recommended that those described in 2.1.2, 2.1.3 and 2.1.4 are homologated by the FIA and carry their label.

2.1.6. It is permitted to make a hole in series production seats to allow secure anchoring of seat belts.

2.1.7. All seat belts used on International Events must be homologated by the FIA, and carry their label.

For national events, where Specific Regulations require an FIA Homologated harness, harnesses homologated by the FIA according to FIA standard 8853-2016 may be used for up to five years after the year stated on the label.

Harnesses homologated by the FIA according to FIA standards 8853/98 and 8854/98 may be used until 31st December of the year stated on the label.

Harnesses homologated by the FIA will display the FIA Homologation Label on the left shoulder strap.

2.1.8. It is not permitted to mix parts of seat belts. Only complete sets as supplied by manufacturers are to be used.

2.1.9. Only one release mechanism is permitted on each seat belt configuration and this must be available for the wearer to operate whilst seated in the competing position.

CORBEAU

MOTORSPORT SAFETY SYSTEMS

FIA
8862-2009
4 Point &
6 Point Seats

Full Range
of FIA
8855-1999
Seats

trust the brand

NEW FIA 8855-2021 SEAT - JANUARY 2022

6 Point Formula Harness
8853-2016

6 Point HANS Harness
8853-2016

4 Point FIA Harness
8854/98

Make sure your equipment is in date for the 2022 season

All competition licence holders call now for your 2022 preferential package.
For all your motorsport safety requirements call our sales team.

HANS® devices | Tow straps | Pro-Seat moulded seats | Window nets

corbeau-seats.com sales@corbeau-seats.com +44(0)1424 854499

ISO 9001 FIA INDUSTRY WORKING GROUP

2.1.10. The anchorage points to the rear should be positioned so that the strap from the shoulder is as near horizontal as possible. It should not be located on the floor directly behind the driver/co-driver.

2.1.11. Seat belts once involved in a serious accident should be discarded as they are likely to have stretched. Belts subjected to oil, acid or heat should be replaced.

2.1.12. Elastic devices attached to the shoulder strap are forbidden.

2.2. Seats. All seats should be correctly located and securely anchored in such a way as to allow no movement in squab or backrest. When installing a Competition Seat, carry out the following checks before selection or purchase:

(a) Study the requirements of the vehicle concerned and ask the manufacturer's advice and recommendations.
(b) Check that the seat is suitable for the type of forces to which it could be subjected. These will include fore and aft and lateral loadings.
(c) Check that the seat carries full instructions for installation in your vehicle.
(d) Check that suitable mounting installations are available from the manufacturer.
(e) Ask the manufacturer to confirm that the seat frame is suitable for your Motor Sport discipline.
(f) If the original seat attachments or supports are changed, the new parts must either be approved for that application by the seat manufacturer or must comply with the following specifications (see drawing No. K32).

2.2.1. Supports must be attached to the shell/chassis via at least 4 mounting points per seat using bolts with a minimum diameter of 8mm and counterplates, according to drawing No. K32. The minimum area of contact between support, shell/chassis and counterplate is 40 sq cm for each mounting point. In Series Production Cars manufacturers' standard seat mounting points may be used. If quick release systems are used, they must be capable of withstanding vertical and horizontal forces of 18000N, applied non-simultaneously. If rails for adjusting the seat are used, they must be those originally supplied with the homologated car or with the seat.

2.2.1.1. For new build vehicles from 1st January 2021, where transverse seat mounting rails are used, they must be compliant with drawing No. K64(a) or homologated by the FIA or an FIA recognised ASN. The end plates may alternatively be welded to the counterplate. Multiple mounting holes, to a maximum of 4 at each mounting point, are permitted as shown in K64 (b)-(c).

2.2.1.2. Drawing K64 (a)-(c) Material specification:

Tube

Cold Drawn Seamless Unalloyed Carbon Steel
Minimum Yield strength 350N/mm2
Minimum dimensions 35mm square x 2.5mm wall thickness

Box Section (Structural)

Unalloyed Carbon Steel
Minimum Yield Strength 350N/mm2
Minimum dimensions 35mm square x 2.5mm wall thickness

2.2.1.3. Any mounting holes drilled in the seat rails must have bushes installed, these must be fully welded. The bushes must be profiled to prevent them being pulled through, alternatively they may be of 'top hat' type inserted from below. Minimum bush diameter 13mm for M8 bolts, 15mm for M10 bolts. Multiple bush position are permitted.

2.2.1.4. The minimum overall length of the "U" shape extruded section is 50mm with a 2.5mm wall thickness.

Each mounting point must be capable of withstanding a force of 15000N applied in any direction.

2.2.2. The seat must be attached to the supports via 4 mounting points, 2 at the front and 2 at the rear of the seat, using bolts with a minimum diameter of 8mm and reinforcements integrated into the seat.

2.2.3. The minimum thickness of the supports and counterplates is 3mm for steel and 5mm for light alloy materials. The minimum longitudinal dimension of each support is 6cm.

2.3. Headrests. On all vehicles where it is not mandatory (13) it is strongly recommended that a head restraint in the form of a headrest be fitted, as near to the driver's/co-driver's helmet as possible, to prevent whiplash of the neck and spine in case of impact. It is recommended that they comply with 13.

Fire Extinguishers

3.1. Plumbed-In Fire Extinguisher Systems

3.1.1. Where a plumbed-in fire extinguisher system is required the vehicle must be equipped with an extinguishing system in compliance with FIA Standard for plumbed-in Fire Extinguisher Systems in Competition Cars (1999) or with FIA Standard 8865-2015.

The system must be used in accordance with the manufacturer's instructions and with FIA Technical Lists n°16 or n°52.

In rallies, the minimum quantity of extinguishant for systems of FIA Technical List n°16 must be 3 kg.

3.1.2. All extinguisher containers must be adequately protected and must be situated within the cockpit.

The container may also be situated in the luggage compartment on condition that it is at least 300 mm from the outer edges of the bodywork in all horizontal directions. It is prohibited to mount bottles outside the main structure.

3.1.3. It must be secured by a minimum of 2 screw-locked metallic straps and the securing system must be able to withstand a deceleration of 25 g.

Anti-torpedo tabs are required.

The material of the securing system must operate within the −15°C to +80°C temperature range.

All extinguishing equipment must withstand fire.

Plastic pipes are prohibited and metal pipes are obligatory (unless specified otherwise). The system must work in all positions.

3.1.4. The system should have two points of triggering, one for the driver (and Co-driver in Rallies) and one outside the car for activation by Marshals etc.

3.1.5. The driver (and co-driver where applicable) must be able to trigger the extinguishing system manually when seated normally with his safety harnesses fastened and the steering wheel in place.

3.1.6. The triggering point from the exterior must be positioned close to the Circuit Breaker (or combined with it) and must be marked by the letter "E" in red inside a white circle of at least 10cm diameter with a red edge.

Lighter. Better. Faster.

The ultimate in fire suppression systems

With even faster and more efficient deployment of extinguishant, all systems have been homologated to conform to either FIA Technical list numbers 16 or 52, making them the most advanced in the world.

zero 2020 | zero 360 | zero 275 | zero EV

- All systems FIA Homologated
- Smaller and lighter than ever
- Constant discharge in any orientation
- Excellent fire knock down and fire out capabilities
- Two year service cycle
- The choice of world championship winning constructors

Lightweighting driver safety technology

RACE HARNESSES

RACE MIRRORS

QUICK RELEASE STEERING BOSSES

RAIN LIGHTS

ASTON MARTIN RACING | lifeline

TECHNICAL SUPPLIER

lifeline

The global leaders in motorsport safety

www.lifeline-fire.co.uk

Email: sales@lifeline-fire.co.uk

UK Phone: +44 (0)24 7671 2999 | USA Phone: +1 (540) 251 2724 | Germany Phone: +49 (0)2234 6972121

3.1.7. Extinguisher nozzles must be suitable for the extinguishant and be installed in such a way that they are not directly pointed at the occupants' heads.

3.2. Hand-held extinguishers

3.2.1. Where a hand-held fire extinguisher is required the vehicle must be equipped with at least one fire extinguisher in compliance with 3.2.2 to 3.2.7 hereunder or with FIA Standard 8865-2015 (Articles 3.2.2 to 3.2.5 hereunder do not apply in the latter case).

3.2.2. Permitted extinguishants:

AFFF, Clean Agent, powder or any other extinguishant homologated by the FIA.

3.2.3. Minimum quantity of extinguishant:

- AFFF foam
  (includes: FireSense, Zero 2000, F-TEC etc) 2.4 litres
- Gas
  (includes: Novec 1230, FX G-TEC/N-TEC, Viro3, Zero 360, Extreme etc) 2.0 kg
- Powder 2.0 kg

3.2.4. All extinguishers must be pressurised according with the manufacturer's instructions. Powder extinguishers must be pressurised to 8 bars minimum, 13.5 bars maximum. Furthermore, each extinguisher must be equipped with a means of checking the pressure of the contents.

3.2.5. The following information must be visible on each extinguisher:

- Capacity
- Type of extinguishant
- Weight or volume of the extinguishant
- Date the extinguisher must be checked, which must be no more than two years after either the date of filling or the date of the last check, or corresponding expiry date.

3.2.6. All extinguishers must be adequately protected.

Their mountings must be able to withstand a deceleration of 25g. Furthermore, only quick-release metal fastenings (two minimum), with metal straps, are accepted. Anti-torpedo tabs are required. It is prohibited to mount bottles outside the main structure.

3.2.7. The extinguishers must be easily accessible for the driver and the co-driver.

3.3. During events:

3.3.1. All plumbed-in extinguisher systems must be in an 'ARMED' condition (i.e. be capable of being operated without the removal of any safety device) at all times whilst competing or practising in races or speed events (including during post-event scrutineering), and at all times that crash helmets are worn on rallies (i.e. on Stages etc.).

3.3.2. Any plumbed-in extinguisher system found to be incapable of being operated will be the subject of a report to the Clerk of the Course/Stewards for possible penalty as an offence against Safety Regulations.

3.3.3. Checking for correctly 'Armed' extinguisher systems, should only be carried out by Motorsport UK Scrutineers, and/or Judges of Fact nominated for that purpose.

PD EXTINGUISHERS

MOTORSPORT
FIRE EXTINGUISHERS

4kg Haylo
Mechanical/Electrical
Plumbed in saloon car system FIA Approved to Technical list 16 EX057.19

FIA APPROVED

4.25L AFFF
Mechanical/Electrical
Plumbed in saloon car system FIA Approved to Technical list 16 EX056.19

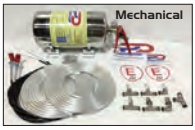

FIA APPROVED

2 & 3 Kg Haylo Hand Held

Haylo is a Halon replacement extinguishing medium

2.4 Litre AFFF Hand Held

Motorsport UK compliant our AFFF uses Aerospace grade aqueous foam

t: 079 7383 0695
e: chris@pdextinguishers.co.uk

Revidge Fold, Revidge Rd
Blackburn, Lancs, BB1 8DJ

Find us on: facebook

www.pdextinguishers.co.uk

FEV

FIRE SUPPRESSION

MOTORSPORT & RACE CAR FIRE EXTINGUISHER EXPERTS

FEV is a UK based family business, established in 1990. We are dedicated to manufacturing high quality fire suppression systems for the motorsport industry.

Our products are the winning choice for major motorsport manufacturers and teams worldwide and in the UK. We continue to supply all level and classes of racing from Formula One to the Clubman Driver.

- Smaller packaged and lightweight systems including 3.5ltr options for MS UK regulations
- New UK service agents
- High quality systems with new cost effective price options
- Products at the forefront of Motorsport fire protection

SAFETY ACCESSORIES

Brand New Safety Accessories now available including Motorsport UK Compliant Tow Straps and FIA/ Motorsport UK compliant Towing Eyes and Seat Rail Kits. Please contact us for information.

01243 555566 | WWW.F-E-V.CO.UK | SALES@F-E-V.CO.UK

FIA / MSUK homologated systems to meet regulations for all levels of racing.

Safety Fuel Cells

4.1. The FIA approved standard for Safety Fuel Cells is FIA/Spec./FT.3 and FT.5. Fuel cells complying with this standard are only manufactured by authorised companies and bear the name of the company, specification, code and date of manufacture stencilled on each cell. No other cells are approved by the FIA.

4.2. Under FIA regulations the homologation expires once the cell is five years old. The validity of this homologation may be extended for a further two years if the cell is inspected and recertified by the original manufacturer.

4.3. It is recommended that any safety cell is periodically inspected on a regular basis.

Red Warning Light

5.1. A rearward facing red warning light of a minimum of 21 watts, with surface area minimum 20cm2, maximum 40cm2, or of 21 watts with a surface area minimum of 50cm2 and with lens and reflector to EU Standards, must be located within 10cm of the centre line of the vehicle and be clearly visible from the rear. Vehicles fitted with full width bodywork may alternatively use two lights equally located about the vehicle centre line. An alternative light unit of equal or enhanced constant luminosity or LED lights that are either homologated by the FIA or comply with relevant EU Regulations may be used.

5.2. The warning light must be switched on when visibility conditions are reduced, or as detailed within championship and/or event regulations, or when so instructed by the Clerk of the Course.

Tank Fillers, Vents and Caps

6. Tank fillers and caps must not protrude beyond the bodywork or be situated within the driver/passenger compartment. The caps must have an efficient locking action to reduce the risk of opening during an accident and to ensure closing after refuelling (14.1.2). Air vents must be at least 25cm to the rear of the cockpit and must be designed to prevent the escape of fuel should the vehicle be inverted. It is recommended that a non return valve is incorporated in the vent system. The entire fuel tank area 'Licked by the open air stream' must incorporate a crushable structure as follows:

Crushable Structure

7.1. The crushable structure should be a sandwich construction based on a fire resistant core of minimum crushing strength 25lb/sq in. It is permitted to pass water pipes through this core.

7.2. The minimum thickness of the sandwich construction must be 10mm. The fore and aft fuel tank area, however, must provide for a crushable structure of at least 100mm thickness at its thickest point, the position of this widest point to be at the constructor's discretion, over a length of at least 35cm after which it may be generally reduced to 10mm.

7.3. The sandwich construction must include two sheets of 1.5mm thick aluminium sheet having a tensile strength of 14 tons/sq in and minimum elongation of 5%.

7.4. All oil tanks mounted outside the main chassis structure must be surrounded by crushable structure of minimum thickness 10mm.

External Circuit Breaker

8.1. The circuit breaker, when operated, must isolate all electrical circuits with the exception of those that operate fire extinguishers.

8.1.1. Push-button circuit breakers must only isolate the electrical circuits, any re-set must be operated by a separate button or switch.

8.2. The triggering system for the circuit breaker on saloons should be situated at the lower part of the windscreen mounting, preferably on the driver's side or below the rear window.

8.3. On Open Cars the triggering system should be situated on the lower main hoop of the Roll-over Bar on the driver's side or at the lower part of the windscreen mounting (as above).

8.4. Alternatively on cars of Periods A to F the mounting point may be mounted approximately vertically below the line of the scuttle on the driver's side.

8.5. The triggering system location must be identified by a Red Spark on a White-edged Blue triangle (12cm base), and the 'On' and 'Off' positions clearly marked.

Overalls

9.1. Clean Flame-Resistant overalls, must be worn to cover from ankle to wrist to neck.

Acceptable standards:

9.1.1. Racing:
FIA 8856-2018
FIA 8856-2000

9.1.2. Special Stage Rallies, Sprints and Hill Climbs:
FIA 8856-2018
FIA 8856-2000
FIA 1986 Standard

9.1.3. Karting:
As defined in U.13.3.

9.1.4. All Other Events (including overalls in accordance with Q.12.25.2):
BS6249 part 1 Index A or B (but not part C).
BSEN533
EN533:1995 Index 3
ISO 14116
FIA 8856-2018
FIA 8856-2000
FIA 1986 Standard.

9.1.5. For FIA Standard Overalls the homologation label will be stitched into the fabric of the garment or on a sewn in label. For International use overalls must comply with: FIA 8856-2000.

Arai HELMET®

YOUR NEW Arai IS CLOSER THAN YOU THINK

ARAI GENUINE PARTS STAMPED ON THE HELMET

Arai IT'S IN MY DNA

Arai FREE YEARLY SERVICE

Arai IT'S TIME TO CHANGE

Araimotorsportuk #WhyArai

HARDER STRONGER SAFER

SK-6 CK-6

FOR OVER 50 YEARS ARAI HAVE BEEN CREATING THE HARDEST, STRONGEST AND SAFEST HELMETS POSSIBLE. BORN FROM A PHILOSOPHY TO CREATE THE VERY BEST, EVERY ARAI IS HANDMADE BY SKILLED JAPANESE CRAFTSMEN.

BRITISH TOURING CAR CHAMPIONSHIP DRIVER TOM INGRAM

SK-6

CK-6

TO FIND OUT MORE OR TO LOCATE YOUR NEAREST ARAI MOTORSPORT STOCKIST VISIT **WWW.WHYARAI.CO.UK**

9.1.6. As with any item of safety equipment, evidence of damage or excessive wear can render it unsuitable for use. In the case of overalls this could include over frequent, or incorrect, washing, broken seams or stitching and worn patches. Two piece overalls should be avoided, but if worn must overlap and provide flame resistant coverage.

9.1.7. Due to the complex nature of national test standards and variations of detailed testing it is not possible to quote 'equivalents' from foreign national standards unless they are FIA approved as detailed above.

National test standards are in the process of being superseded by European norms (CE Marks), which will provide a common standard throughout Europe.

9.1.8. Individual competitors are responsible for ensuring their own safety and that appropriate flame resistant overalls are worn when mandatory.

9.1.9. Competitors are also strongly advised to wear Flame Resistant gloves, socks, balaclavas and underwear.

Plastic shoes (such as trainers) should be avoided.

9.1.10. Specific regulations concerning Flame Resistant gloves, socks, balaclavas and underwear are published by the FIA and applicable to International events.

9.2. Exceptionally, drivers of three wheeled cars, competing in accordance with A2.2.1 may wear ACU or FIM approved leather overalls.

9.3. When a name appears on a driver's helmet or overalls, this must be the name of the person wearing them.

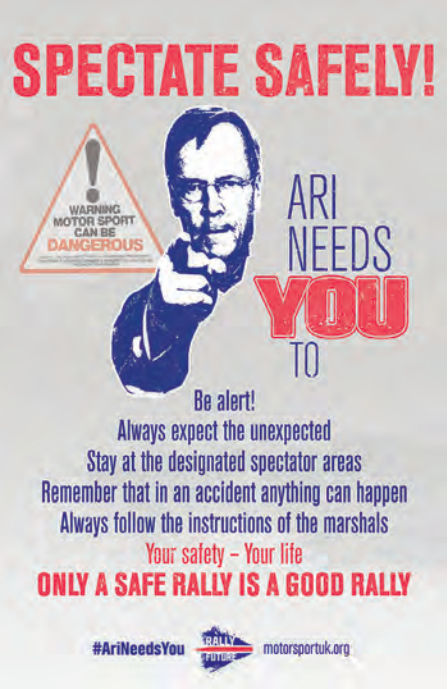

Crash Helmets

10.1. Crash helmets bearing an MSA/Motorsport UK approval sticker must be worn at all times during training, practice and competition. The user must ensure that the helmet is to a standard currently specified (10.3.1), that it fits properly, is secured properly and that it is in a serviceable condition. It is strongly recommended that a flame resistant balaclava, helmet bib or face mask also be worn.

10.2. Total protection can never be given by any headgear, and the best of crash helmets may not entirely prevent head injury or death in a severe accident. Helmet users must understand that helmets are deliberately constructed so that the energy of a severe blow will be absorbed by the helmet and thereby partially destroy it. The damage may not be readily apparent; it is essential therefore that any helmet receiving a blow in an accident is either replaced or returned to the manufacturer for competent inspection – this of necessity must be the responsibility of the helmet user, who will have been aware of the circumstances under which the helmet was struck. It is not possible nor indeed reasonable to expect the scrutineer, in every case, to observe significant damage. Where there is any doubt about the helmet's fitness for its intended purpose then the Chief Scrutineer is empowered to remove the MSA/Motorsport UK Approval Sticker and impound the helmet for the duration of the meeting. This should be a rare occurrence since competitors must appreciate that, once a helmet has served its purpose, it is not only sensible but necessary to replace it. It is the competitor himself who must ensure that the helmet which he uses is fully fit for its purpose; it is clear that this is a small insurance to pay for one's life. The competitor also might consider that, should he survive an accident, but receive head injuries having knowingly used a previously damaged helmet, he could be placing an enormous burden of care upon his family.

10.2.1. Impounding of helmets

Case 1 Pre-Event. If the helmet does not conform with the required Standards or is in a poor or dangerous condition, the Chief Scrutineer will impound the helmet for the duration of the Meeting, removing the MSA/Motorsport UK sticker. At the close of the Meeting the helmet will be returned, as received, with the exception of the MSA/Motorsport UK sticker, to the competitor concerned.

Case 2 Accident during the Event. If the competitor is injured and the helmet is damaged, the Chief Scrutineer will impound the helmet and remove the MSA/Motorsport UK sticker then seek the advice of the Steward as to further action.

Case 3 Accident during Event and competitor evacuated to hospital with head injuries. The Chief Scrutineer will make sure that the helmet has been seen by the Chief Medical Officer, he will then impound the helmet and remove the MSA/Motorsport UK sticker. Unless the Chief Medical Officer wishes to retain the helmet it must be despatched to the Technical Department at Motorsport UK. Unless specifically called for by the competitor it will be disposed of after six weeks.

10.3. The competitor is reminded of the following essential criteria when buying or using his helmet:

(a) Correct Standard.

(b) Correct Fit.

(c) Security.

(d) Condition.

GSM PERFORMANCE

...FINE TUNED TO MEET YOUR NEEDS!

- Over 125 models of sports seats in our dedicated show room
- Europe's largest range of Harnesses, roll cages and safety equipment
- Bespoke seats, trims and re-trimming services available
- Specialist in-store service to ensure you pick the best seat to meet your needs.

NEW - Make GSM your first stop for all your race wear needs

Racesuits

Helmets

Gloves

Boots

Nomex Suits

Kit Bags

Visit: www.gsmperformance.co.uk to learn about all our products and services

GSM Performance Ltd
Unit 5, High Hazles Road, Cotgrave, Nottinghamshire, NG12 3GZ
T +44 (0)115 9893488 E sales@GSMPerformance.co.uk
www.gsmperformance.co.uk

GSM PERFORMANCE

10.3.1. Standards. Helmets bearing one of the under mentioned 'standards' may be approved by Motorsport UK subject to other criteria being met. See also drawing 10.3.1.

(a) ALL MOTORSPORT UK NATIONAL EVENTS

FIA 8860-2010

SNELL SAH2010 (Not valid after 31.12.23)

FIA 8859-2015

FIA 8860-2018

FIA 8860-2018-ABP

SNELL SA2010 (Not valid after 31.12.23)

SNELL SA2015 (Not valid after 31.12.26)

SNELL SA2020

(b) In addition the following are acceptable for:

Motorsport UK National Kart Racing Events (with exception of Kart Drivers under 15 years of age, Cadet and Bambino Drivers) and Motorsport UK National Junior Drag Racing:

SNELL K2010 (Not valid after 31.12.23)

SNELL K2015

SNELL – FIA CMR2007

SNELL – FIA CMS2007

SNELL – FIA CMR2016

SNELL – FIA CMS2016

(c) For all International Events please refer to the FIA Regulations.

Kart Drivers under 15 years of age, Cadet and Bambino Drivers. The weight of the helmet may be checked at any time during an event and must not weigh more than 1,550g:

SNELL – FIA CMR2007

SNELL – FIA CMS2007

SNELL – FIA CMR2016

SNELL – FIA CMS2016

Part of the approval procedure is to affix a Motorsport UK sticker to the outside of the helmet in the approximate location of the driver's right ear. Stickers may only be affixed by selected scrutineers, by Motorsport UK at Motorsport UK House, or by selected manufacturers, after the helmet has been checked for conformity with the standard required and is considered to be in a satisfactory condition.

MSA/Motorsport UK approval stickers, for which a fee of £2.50 is charged, are printed on foil, and once individually affixed, cannot be reapplied. Note: Stickers supplied since 01/01/08 are individually numbered.

Note that helmet standards are regularly reviewed and updated, and superseded. Standards will periodically cease to be acceptable; hence an element of 'lifing' will always remain.

Helmets approved for use in all disciplines require a blue MSA/Motorsport UK sticker to be affixed. Helmets which are accepted for use in kart racing only require a green or yellow where applicable MSA/Motorsport UK sticker to be affixed. These stickers are available from issuing scrutineers.

Officiel d'Honneur Appointments

The following have accepted the position of Officiel d'Honneur for 2022:

M F L Allison

G H Bailey

W Beattie

I D Bennie

K N Blackburn

G S B Blythe

H T Chapell

T J Hassall

A Dean-Lewis MBE

R McCabe

N S Manser

J B H Wood

B Wright

P Liddle

SCHROTH RACING
CHAMPIONS CHOICE

SCHROTH® RACING

© Aston Martin Racing

XLT CARBON

FIA Standard 8853-2016

Wide Range of FHR Devices, Harness Belts & Racing Nets

Visit www.schroth.com/racing
to learn more about our products.

Follow us on Facebook
www.facebook.com/schrothracing

10.3.2. Fit and Security. To ensure satisfactory fit and security of your helmet, proceed as follows:

(a) Obtain correct size by measuring the crown of your head.

(b) Check that there is no side-to-side movement; a helmet should be as closely fitting as possible consistent with comfort.

(c) Tighten straps securely – the chin strap must be under tension at all times; ensure therefore that the strap cannot slip. Chin cups are prohibited.

(d) With head forward attempt to pull up the back of the helmet, to ensure the helmet cannot be removed in this way.

(e) Ensure you can see clearly over each shoulder.

(f) Make sure nothing impedes your breathing in the helmet and never cover your nose or mouth other than with a flame resistant balaclava or face mask. Helmets with life-support attachments must only be worn if they are connected to a life-support system.

(g) Never wear a scarf, tie or other loose clothing which could come loose and possibly cause an accident.

(h) Ensure that the visor can be opened with one gloved hand.

(i) Satisfy yourself that the back of the helmet provides protection for your neck.

(j) Do not buy from mail order unless you can satisfactorily carry out the above checks; return a helmet unused if it does not fit.

10.3.3. Condition and Care of Helmet

(a) The user himself must bear the prime responsibility for ensuring that his helmet is fit for the purpose intended, since significant damage to the helmet may have been sustained without this being apparent to the scrutineer.

(b) Anything other than minor superficial damage is likely to result in the scrutineer removing the Motorsport UK sticker and impounding the helmet for the event.

(c) It is in everyone's interest for the competitor to buy the best helmet he can and to look after it (the best is not necessarily the most expensive). A helmet bag should always be used.

(d) There must be no alteration to the structure of a helmet. Where a radio intercom is fitted this should only be done in accordance with the helmet manufacturer's instructions. Fitment of cameras to helmets by whatever means is not permitted unless an integral camera is provided by the helmet manufacturer and that model of helmet is approved under one of the accepted standards.

(e) Use only a weak solution of soft soap and water to clean the interior and exterior of the helmet; do not get the interior too wet.

(f) Some moulded plastic helmets although they meet approved standards can be seriously damaged by substances such as petrol, paint, adhesives, cleaning agents and stickers (not the Motorsport UK stickers) – such damage may not always be apparent; however, crazing or obvious dulling of the surface finish could indicate serious structural weakening of the helmet and is likely to result in the scrutineer removing the Motorsport UK sticker and impounding the helmet for the event.

(g) The helmet should be stored, preferably in a helmet bag, in a cool dry place away from sunlight when not in use. Do not strap the helmet to the roll cage or allow other unrestrained movement which could cause the helmet to be damaged.

(h) A good helmet, properly cared for, is one very important link in a long chain of safety measures. Do not allow it to become the weak link. Do not rely on others. You are responsible for your own safety. Do not, through your own fault, become a grave burden to others.

10.4. FHR Device

It is permitted to incorporate the use of an FIA approved FHR Device fitted in accordance with FIA regulations and the below.

For Motorsport UK National Events in addition to helmets listed by the FIA as recognised for use with FHR, helmets to Snell SA2015, Snell SA2020 and Snell SAH2010 are accepted subject to the anchorage points being marked as homologated to FIA 8858-2010.

10.4.1. Part of the approval procedure is to affix an Motorsport UK sticker to the yoke of the FHR device.

Stickers may only be affixed by selected scrutineers, by Motorsport UK at Motorsport UK House, or by selected manufacturers, after the FHR device has been checked for conformity with the standard required and is considered to be in a satisfactory condition.

Motorsport UK approval stickers, for which a fee of £2.50 is charged, are printed on foil, and once individually affixed, cannot be reapplied. Note: Stickers are individually numbered.

Where there is any doubt about the device's fitness for its intended purpose then the Chief Scrutineer is empowered to remove the Motorsport UK Approval Sticker and impound the FHR Device for the duration of the meeting.

The FHR Device may also be impounded by the Chief Scrutineer in the same cases as the helmet per 10.2.1.

Goggles and Visors

11.1. Either goggles or a visor must be worn at all times during training, practice and competing, unless in a closed vehicle.

11.2. Recommended visor and goggles standard (minimum) BS4110, BS4110:1999, BS EN 1938, European Standard 89/686/EEC.

11.3. Goggles or visors must be clear or neutral density filters.

Front Engined Cars

12. With front engine cars a propeller shaft restraint should be fitted. Either safety hooks or a rigidly fixed steel panel of not less than 18swg.

Head Restraints

13. Head restraints when required to be fitted, must be capable of restraining a 17kg mass decelerating at 5g.

Dimensions to be 10cms x 10cms and located such that the driver's/passenger's head/helmet is restrained and cannot move past it under rearward forces, or be trapped between the rollbar and the head restraint. It is recommended that it be within 5cm of the driver's/ passenger's helmet when they are normally seated.

General Safety Recommendations

14.1. Owing to the widely varying nature of competitions and the vehicles taking part in them, Motorsport UK takes the view that it would not be in the best interests of the competitors to cover all aspects of safety precautions with mandatory regulations. Inevitably such regulations could not necessarily provide for the most appropriate safety precautions in all foreseeable circumstances.

The Motorsport UK therefore draws attention to the following points so that the competitors can consider them and take precautions as seem appropriate to their own particular requirements.

14.1.1. Electrical

(a) **Auxiliary Batteries** – precautions should be taken to reduce the possibility of acid burns from batteries in case of accidents. Auxiliary Batteries should be secured within a nonconductive leak-proof compartment.

(b) **Electrical System** – all wiring should be secured and well protected to reduce the risk of fire from electrical short circuits.

14.1.2. Fuel

(a) **Fuel Tanks and Pipes** – every effort should be made to isolate fuel tanks and pipes from the driver/passenger compartment. The risk of fuel spillage from accident damage can be reduced by use of bag type tanks or by coating metal tanks with GRP. Tanks should be located so that they are given maximum protection by the structure of the vehicle. Vents should be designed to avoid spillage if the vehicle becomes inverted.

(b) **Fuel Fillers** – these should be designed and located to reduce risk of damage. Filler caps should not be liable to open in the case of an accident. Simple screw caps are effective. The positive locking of the fuel filler caps is recommended. The filler pipe to the tank should be of minimum possible length and not protrude beyond the bodywork (6).

14.1.3. Steering Wheels. The types least likely to inflict injuries due to breakage should be selected. Uncovered wooden rims should be avoided.

14.1.4. Fire Extinguishers. Even small extinguishers carried in a vehicle can extinguish or contain fires before they develop seriously. Minimum recommendation is for a 1.75 litre AFFF extinguisher or equivalent with BS4123/EN3 approval (EN3 minimum size is 2 litre AFFF) and a rating of at least 34B. More sophisticated equipment is required in many events and full vehicle systems are highly recommended (see 3).

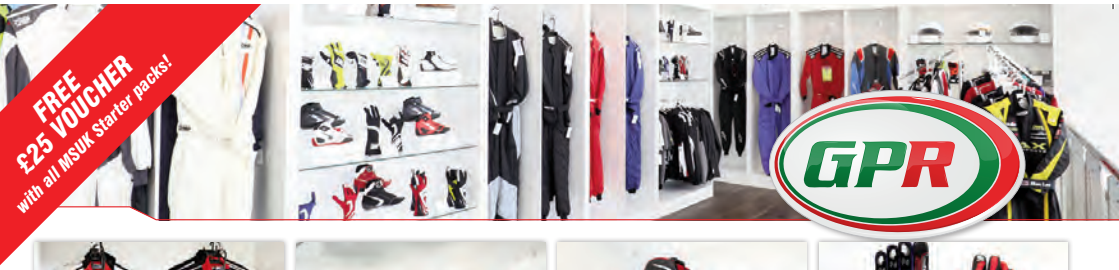

RACE SUITS

HELMETS

BOOTS

GLOVES

UNDERWEAR

HANS DEVICE

KART WEAR

LUGGAGE

SILVERSTONE CIRCUIT SHOWROOM

www.gprdirect.com OPEN 7 DAYS 01327 855 585

SILVERSTONE CIRCUIT, TOWCESTER, NN12 8TN

Racetech IMPROVING YOUR SAFETY & PERFORMANCE

4119 SERIES RACE SEAT

"Study the requirements of the vehicle concerned and ask the manufacturer's advice and recommendations"
Motorsport UK Yearbook 2021 (Compeditors: Safety, sec 2.2 Seats)

www.racetecheurope.co.uk

Racetech IMPROVING YOUR SAFETY & PERFORMANCE

FIA APPROVED HARNESSES

- Lightweight alloy adjusters available
- 2-inch or 3-inch straps
- Wide range of colours

STEERING WHEELS

- 300, 330, 350mm diameter
- Suede leather
- Flat or dished

ROLLCAGE PADDING

- BSCI closed-cell foam
- FIA and SFI Approved
- 38mm to 45mm sizes

- All sizes are 900mm long

4100 SERIES SEATS

- Shell weight from just 5.8kg
- Series includes non-HR models
- 3 sizes to suit

FIA APPROVED

www.racetecheurope.co.uk

14.1.5. Seats. See 2.2.

14.1.6. Headrests. See 2.3.

14.1.7. Radiator Caps. These caps should be positioned or shielded in such a way that hot water or steam cannot scald the driver of the vehicle if they become opened or broken in an accident.

14.1.8. Clutch and Bell Housing Protection. It is recommended that a shield be placed to guard the clutch/bellhousing and to protect in case of clutch/flywheel derangement. This can be a 1/8in steel plate, or sandbag type absorber as used in drag racing.

14.1.9. As a general principal competitors are advised to replace any safety item, helmet, safety harness, seats etc., should they have been involved in a severe accident.

14.2. Paddock Safety. In areas to which the public has access, no engine shall be run with the gears engaged whilst the vehicle has any driving wheels not in direct contact with the ground, unless all moving parts are adequately guarded and, with the exception of Karts, a competent person is seated in the driving seat.

14.3. Heat and Flame Resistant Clothing. Where appropriate and required by specific regulations the FIA standard is shown below, as detailed in FIA Yearbook, Appendix L, Chapter III, Article 2. These standards are advised for all competition use where protective clothing is either mandatory or recommended.

(a) **Underclothing**. Materials tested to ISO 6940. An indication of this should appear on the front of the upper garment, which must cover the neck.

(b) **Balaclavas**. Materials tested to ISO 6940. All the part seen in frontal projection when worn to consist of at least 2 layers of minimum 180 gr/m^2 each. The bottom of the balaclava to meet the requirements in (f).

(c) **Socks**. Materials tested to ISO 6940. Socks to be half hose (to mid-calf) and made from at least one layer minimum 180 gr/m^2.

(d) **Shoes**. To cover the whole foot and ankle. Materials tested to ISO 6940 and fastenings and laces to be of non-fusible material. Soles to be manufacturer certified as resistant to hydrocarbons and to flames. Thread used to be flame resistant. Manufacturers to register all shoe models with Motorsport UK and FIA.

(e) **Gloves**. Materials tests to ISO 6940. Each glove to be labelled to that effect. Backs of gloves to be made from at least two layers of 180 gr/m^2. Thread must be flame resistant and non-melting. Gloves must be fitted at the wearer's wrist and cover the cuff of the wearer's overalls. Manufacturers should register all glove models with Motorsport UK and FIA.

(f) Where Motorsport UK/FIA regulations specify the wearing of protective clothing the labels on overalls and upper underclothing may be verified by the organisers for compliance with regulations.

Officials shall also have the right to examine other articles of clothing subject of regulations upon request. Wearers are warned of the particular vulnerability of neck, wrists and ankles. Balaclavas must extend to enter inside the overalls or undergarment around the neck and not come free whichever way the head is moved. Upper undergarments should have a polo style neck.

Ankles and wrists should always be covered by at least two items of protective clothing.

PUBLICATIONS, TECHNICAL PAPERS & CLUB EQUIPMENT

Subject to their availability the products and their prices listed below are correct at the time of going to press, but may be changed without further notice.

PUBLICATIONS (VAT zero rated)

Motorsport UK Yearbook £35.00
Motorsport UK Karting Yearbook £19.00

CLUB EQUIPMENT (VAT standard rated incl.)

Club Membership cards ..... 200 for £28.00
Signing-On Sheets – Competitors/Officials ..... FOC available on website
Signing-On Sheets – Media ..... FOC available on website
"Prohibited Area" rigid PVC warning signs ..... per pack of 5 £60.00
"Motor Sports Can Be Dangerous" rigid PVC warning sign ..... per pack of 5 £60.00

COMPETITORS EQUIPMENT (VAT standard rated incl.)

Motorsport UK Helmet Approval Sticker £2.50
Motorsport UK FHR Approval Sticker £2.50

TECHNICAL PAPERS (VAT zero rated, except † = standard rate)

Motorsport UK Rollcage Certificate – Official Copy ..... ‡each £30.00
Motorsport UK Historic Rally Vehicle Identity Form Registration ..... ‡£100.00
Motorsport UK Vehicle Passport (payable to Inspecting Scrutineer) £45.00
FIA Historic Technical Passport Application (excluding Registrars Fee) ... *‡each £408.00
FIA Current Homologation Papers for any UK car ..... ‡each £56.00
FIA Current Homologation Papers for any non UK car ..... ‡Price on application
FIA Lapsed Homologation Papers ..... ‡each £47.00
FIA Lapsed Homologation Papers for pre-1995 cars ..... ‡each £32.00

‡ Overseas orders are subject to an additional delivery charge.
* Excluding FIA fee.

For the above items, please address order(s) to:

Sales Team, Motorsport UK, Bicester OX27 8FY

Purchase online from www.motorsportuk.org

Appendix 1: Tables and Drawings

Drawing 10.3.1

Approval Sticker **Approval Sticker** **Approval Sticker**

Drawing 10.4.1

Motorsport UK

OPEN
Monday – Friday
9.00–17.00

Tel: 01753 765000

Membership Team:
Tel: 01753 765050

Website:
www.motorsportuk.org

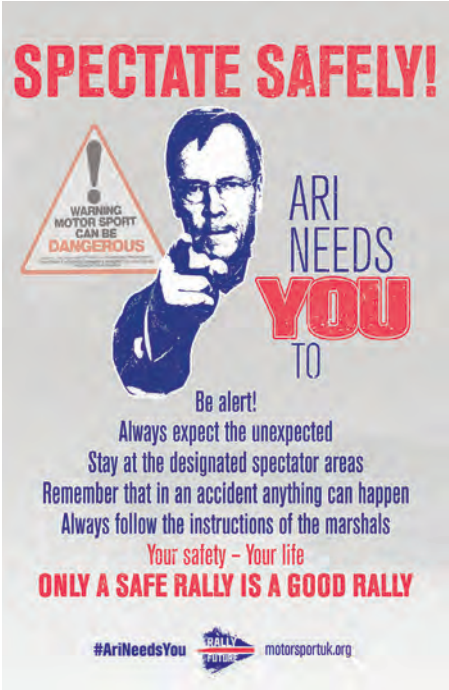

Drawing 10.3.1

HELMET STANDARDS

CMR2007

CMS2007

CMR2016

CMS2016

K2020

K2010

SA2010

SAH2010

SA2015

K2015

SA2020

FIA

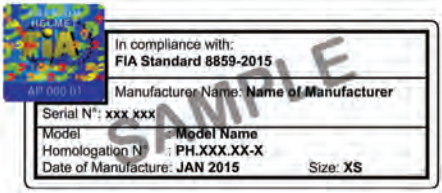

Appendix 2: Safety Cage Drawings

Drawing No. 1

Drawing No. 2

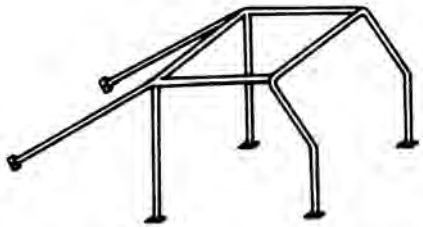

Drawing No. 3

Drawing No. 4

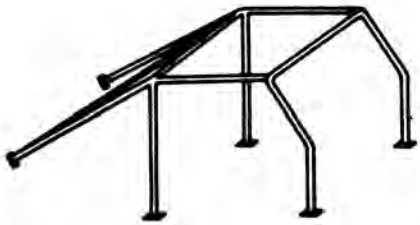

Drawing No. 5

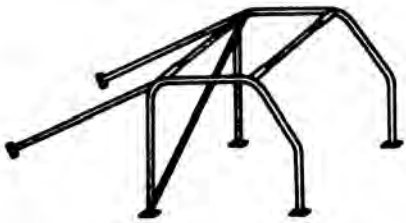

Note: Diagonal may be handed to left or right

Drawing No. 6

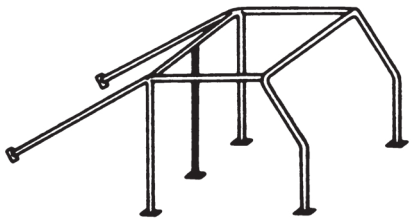

Drawing No. 7

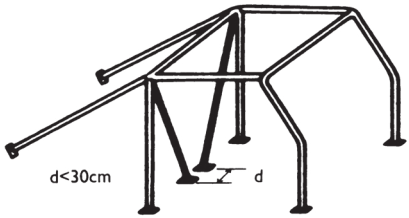

Drawing No. 8

SW MOTOR SPORTS

01772 378224
INFO@SWMOTORSPORTS.CO.UK

EXPERTS IN ROLL OVER PROTECTION & DESIGN

3D SCANNING | CAD DESIGN | LASER CUTTING | CNC TUBE BENDING | POWDER COATING

DISCUSS > SCAN > DESIGN > RACE > WIN

For every Bespoke cage design the most imperative point is to build it to YOUR needs and to regulations for the specific Championship or Series you intend to compete in, from there we will use our experience and technology to maximise your safety and competitiveness.

All the cages we design meet MSUK K-Section Regulatory standards as a minimum, however within this we do have freedom as to additional members, Door bar style, Bar configurations and Tube diameters. Whether you want a bare-minimum light weight bolt in cage to satisfy the regulations or an all-out weld in chassis bracing multipoint FIA cage with Air-jacks and a fuel cell. We can do it... and have done for 25 years winning many races and championships along the way in multiple category's.

Using the latest 3D scanning technology we produce a millimetre accurate, high resolution scan of your car. We are then able to produce your bespoke cage within CAD software with precision fitment. Our highly trained mechanical design team produce work to a high standard, while meeting design requirements for Geometric Dimensioning, Tolerances and MSUK K-section Motorsport regulations, we also put all our designs through simulation to ensure we are giving you improved chassis stiffness, safety and weight savings with in the regulations. FIA homologated options are also available on request.

Under completion, the cage is quality checked and signed off to be collected and that is where our part of your race car build ends and where yours carries on.

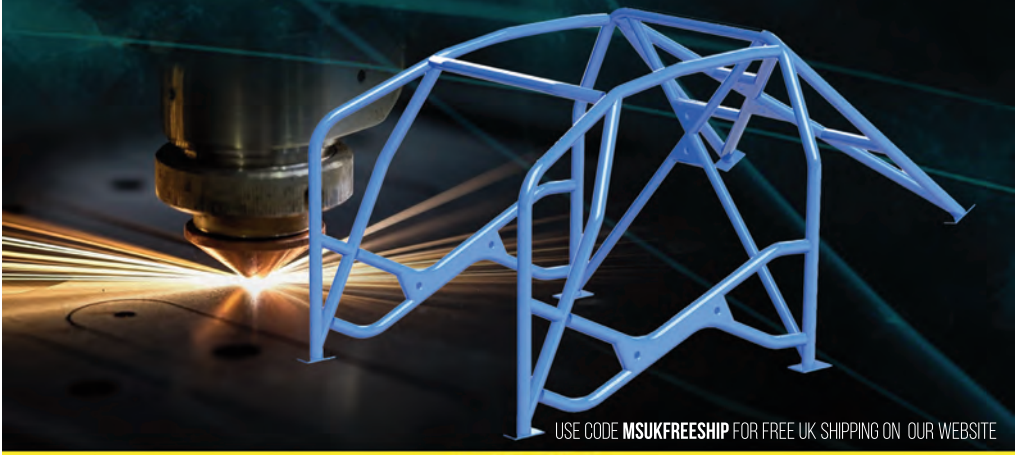

USE CODE **MSUKFREESHIP** FOR FREE UK SHIPPING ON OUR WEBSITE

INFO@SWMOTORSPORTS.CO.UK

WWW.SWMOTORSPORTS.UK

SWMOTORSPORTS LTD, UNIT 3B TALBOT ROAD, LEYLAND, LANCASHIRE PR25 2ZF

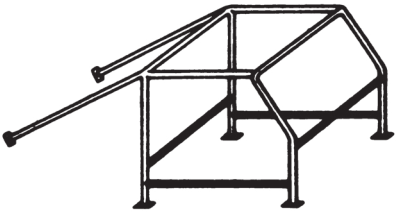

Drawing No. 9

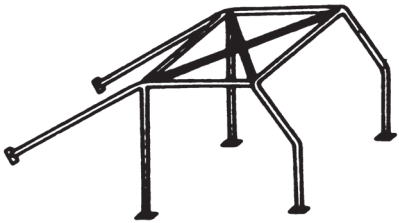

Drawing No. 10

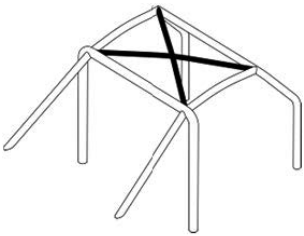

Drawing No. 10 (a)

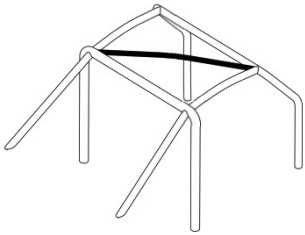

Drawing No. 10 (b) Bar may be fitted in either orientation

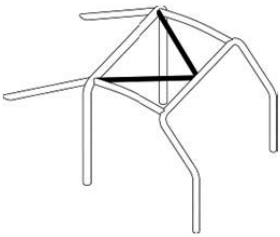

Drawing No. 10 (c)

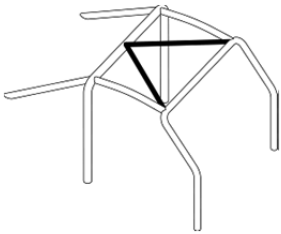

Drawing No. 10 (d)

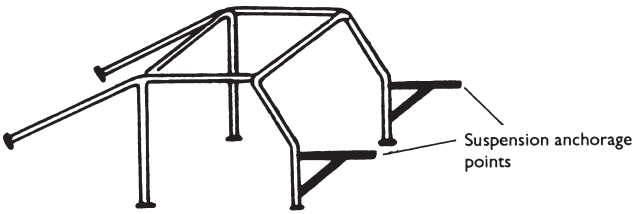

Drawing No. 11

Myfuture

If you're finishing school or college this year and aren't sure of the next step – take a look at the excellent range of Motorsport courses available at Myerscough College.

We have full-time Level 2 and A-Level equivalent Level 3 Diploma options for school leavers. At Higher Education level we offer a choice of two-year Foundation Degrees in Motorsports with the opportunity to progress to a third year BA (Hons) Motorsports top-up.

Residential accommodation for 750 students.

ADVICE SESSIONS

Every month • See website for details

Choose myerscough

- Top land-based FE college for academic success rates
- No. 2 land-based college in UK for student satisfaction*
- Bursary Funds up to £1200 to support your learning
- National Centre of Sporting Excellence
- £16 million campus building programme

*2013 NSS Survey results

uclan University of Central Lancashire — Myerscough College's Degree programmes are validated by the University of Central Lancashire

To receive a prospectus call **01995 642211**
or visit www.myerscough.ac.uk

Myerscough College

Myerscough College, Bilsborrow, Preston, Lancashire. PR3 0RY

myerscoughcoll @myerscoughcoll

TUBE Direct

SUPPLIERS OF MATERIALS & SERVICES TO MOTORSPORT

- Roll cage & chassis tube
- Metric & imperial sizes
- Steel plate & box section
- Cutting & profiling

For help, advice, or sales, call

01327 201002

motor sport UK — FIA

www.tubedirect.uk
sales@tubedirect.uk

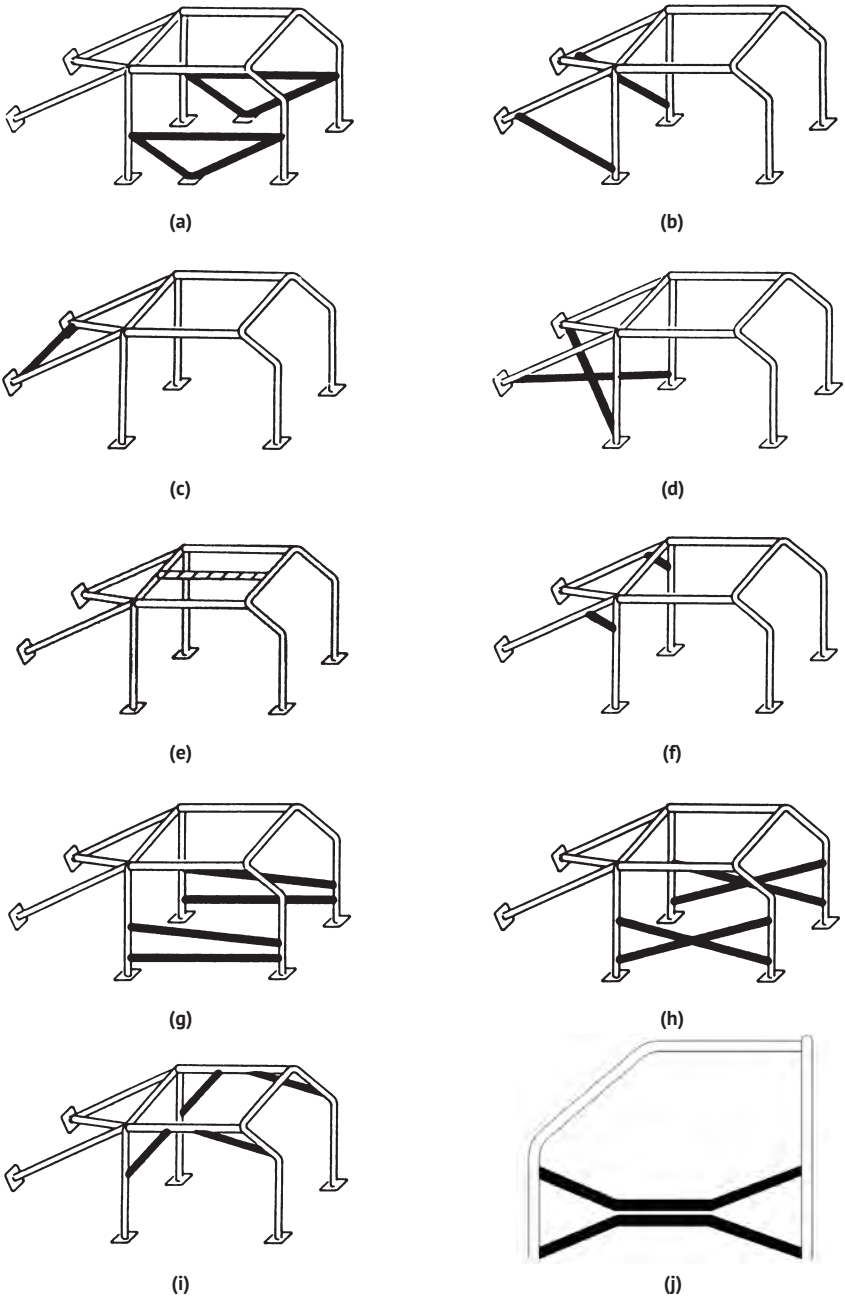

Drawing No. 12 Optional Reinforcing Members [6]

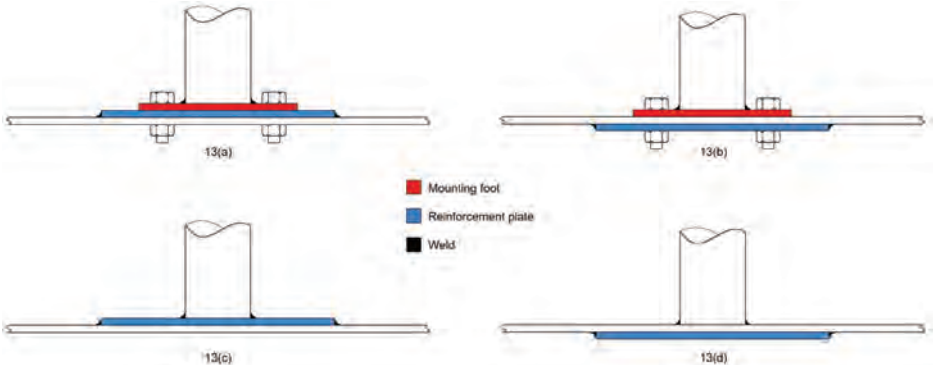

Drawing No. 13

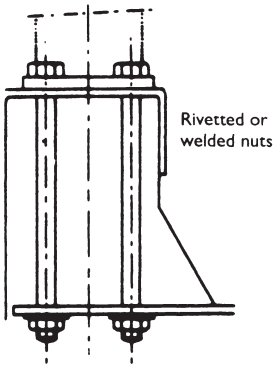

Drawing No. 14

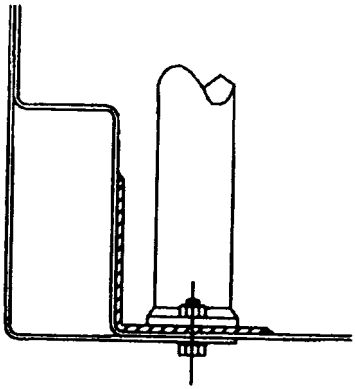

Drawing No. 15

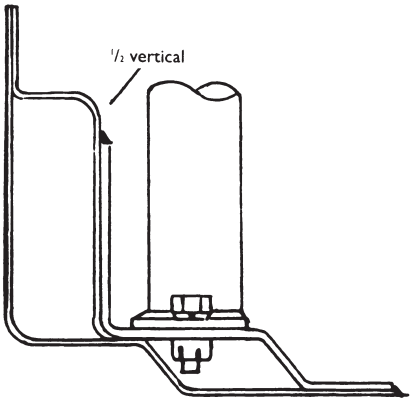

Drawing No. 16

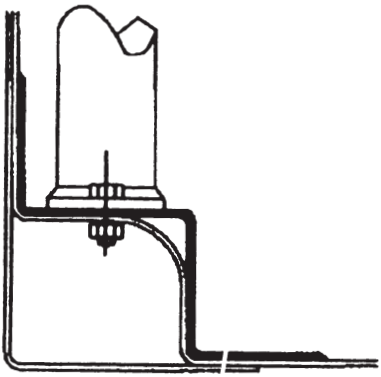

Drawing No. 17

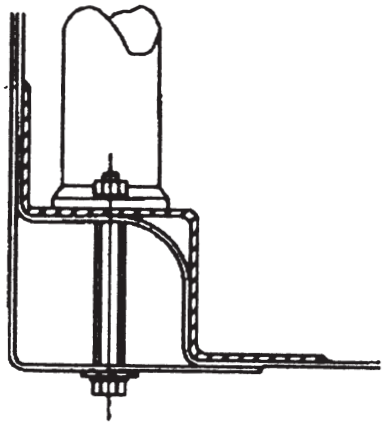

Drawing No. 18

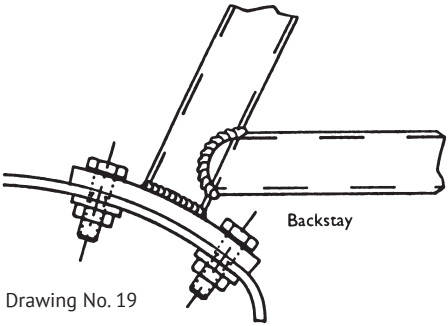

Drawing No. 19

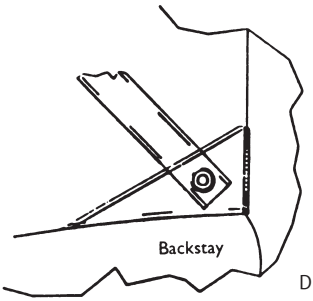

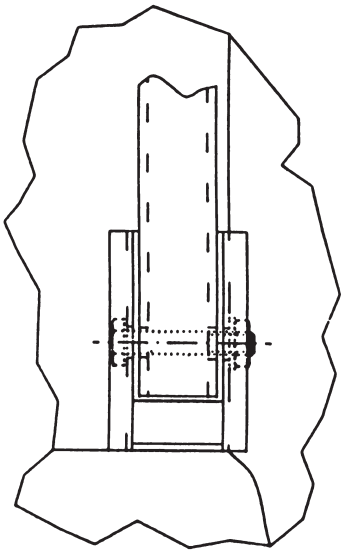

Drawing No. 20

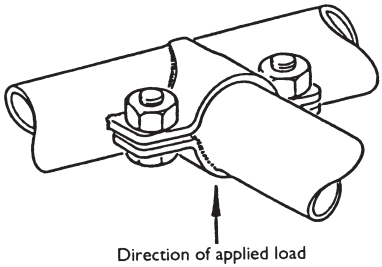

Drawing No. 21

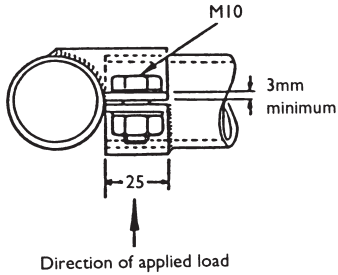

Drawing No. 22

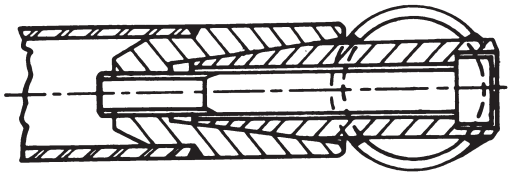

Drawing No. 23

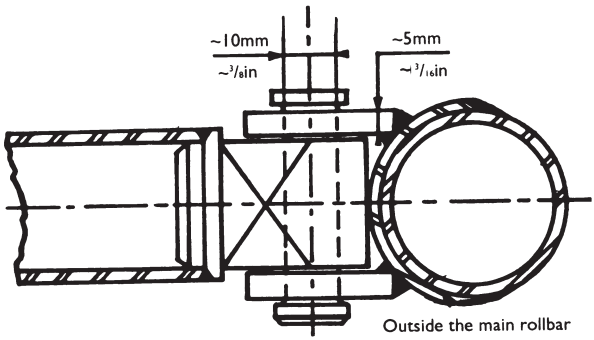

Drawing No. 24

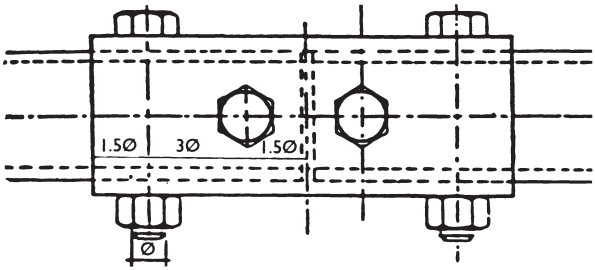

Ø = 14mm (tube≥40mm<50mm diam. ext.)
16mm (tube≥50mm diam. ext.)

Drawing No. 25

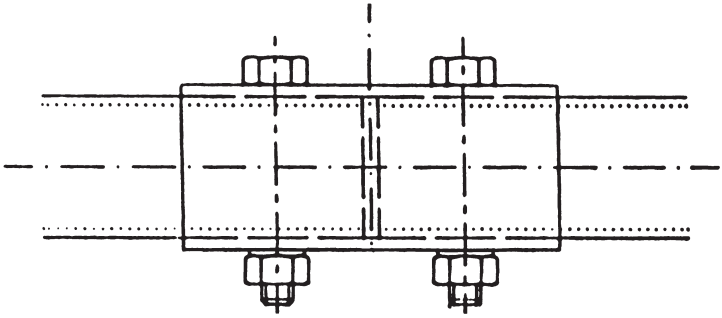

Drawing No. 26

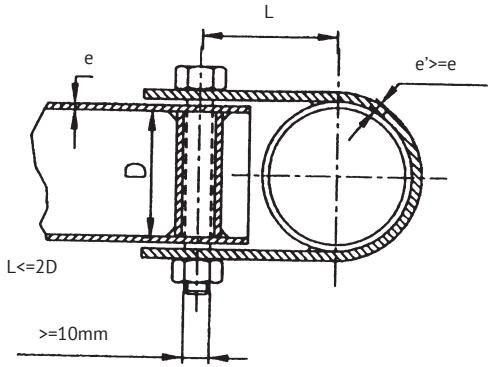

L must be minimum
The clamp width must
be at least 25mm

Drawing No. 27

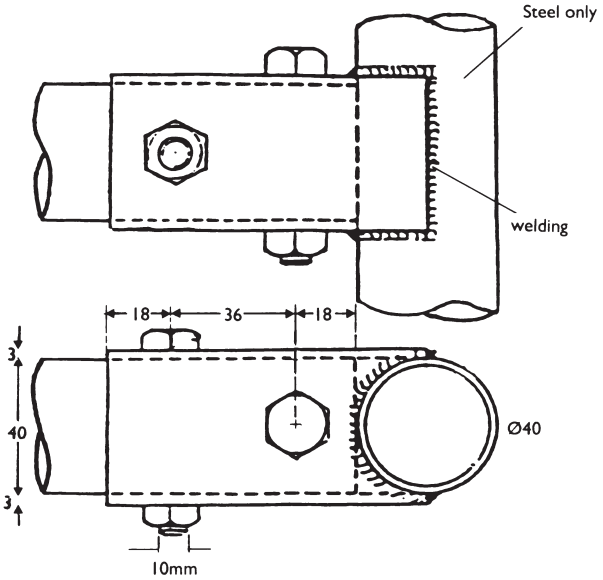

Drawing No. 28

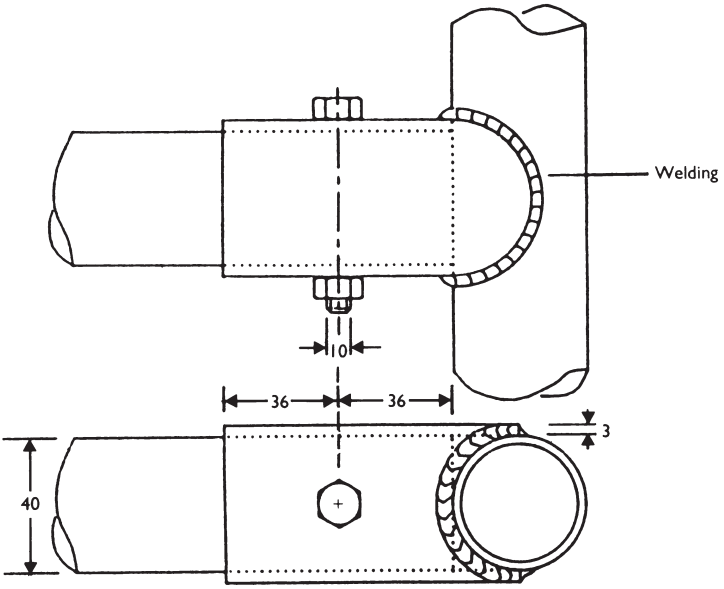

Drawing No. 29

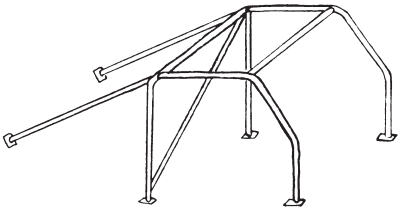

Drawing No. 6(a)

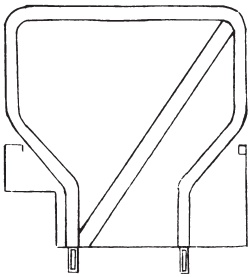

Drawing No. 38

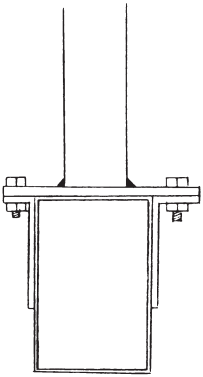

Drawing No. 33

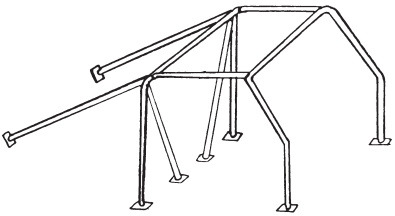

Drawing No. 34

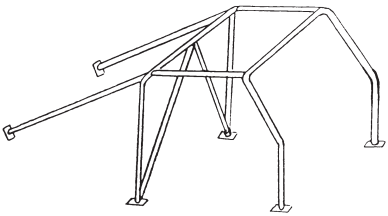

Drawing No. 35

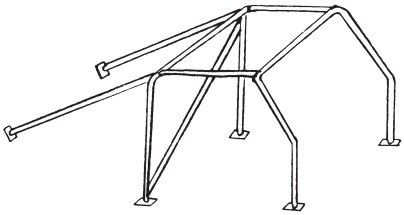

Drawing No. 36

a) Diagonal(s) across Main Hoop

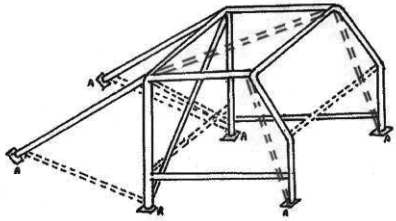

b) Diagonal(s) across Back Stays

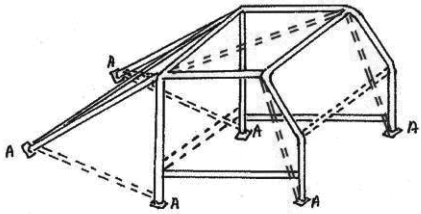

Mandatory minimum requirement
Maximum options permitted
A Mandatory mounting points
Additionally a further 8 points may be attached to the bodyshell.
Competitors should note that an installation to this drawing may contravene FIA Appendix K regulations.
Doorbars may alternatively be as shown in figure 12(g) or (h).
Roof Reinforcement may alternatively be as shown in figure 10(a) to 10(d).

Drawing No. 37

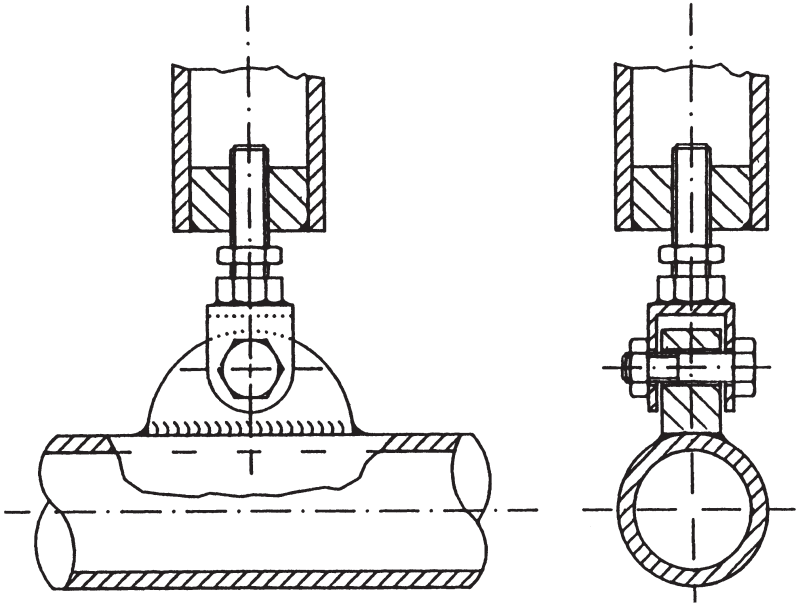

Drawing No. 30

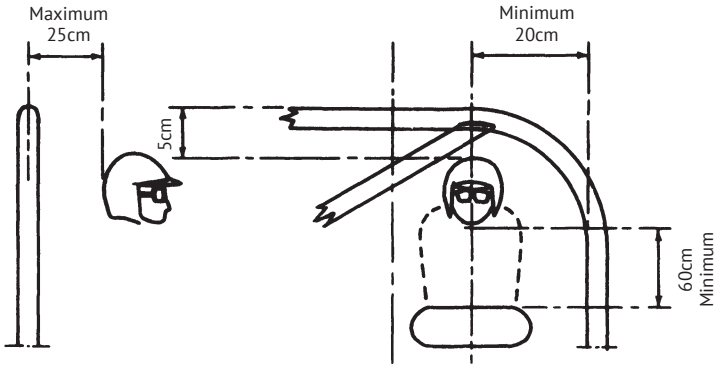

Drawing No. 31

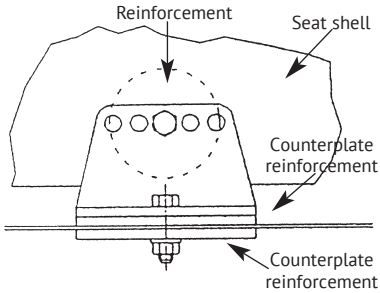

Drawing No. 32

Typical Safety Belt Installation

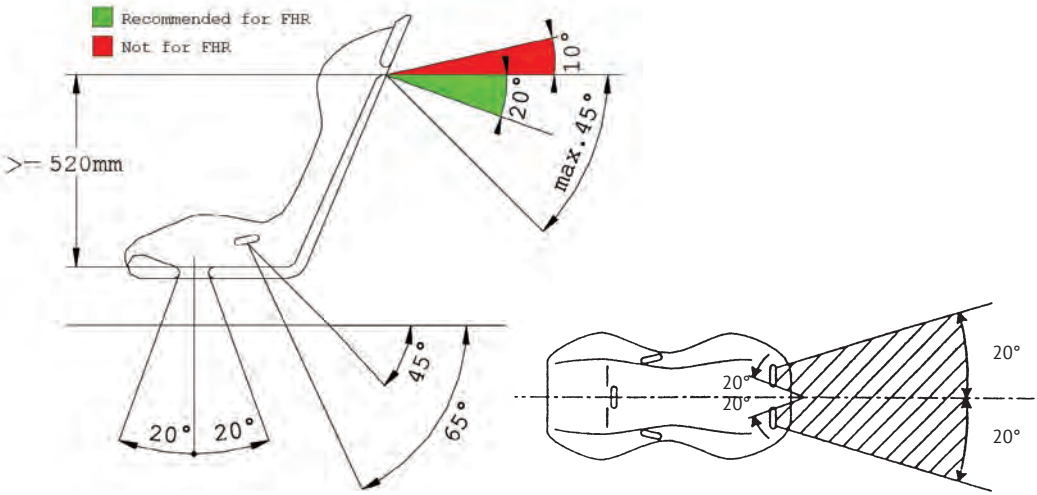

Drawing No. 39

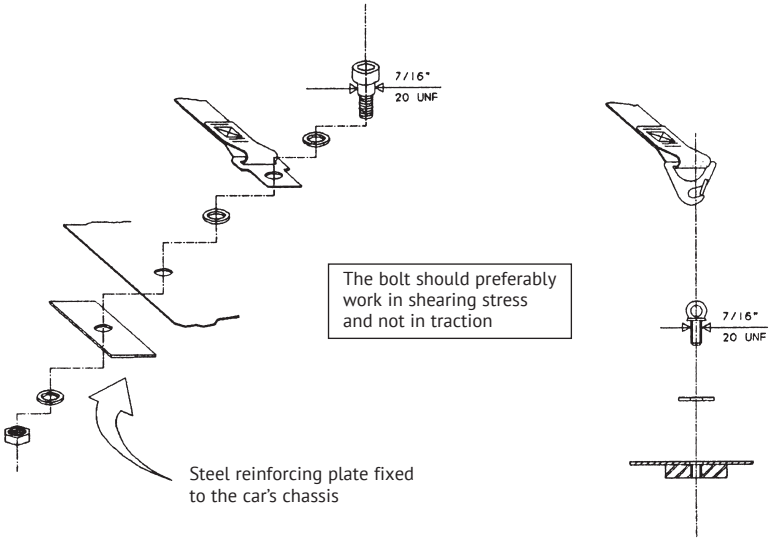

Drawing No. 40

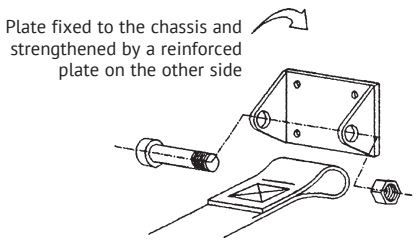

Drawing No. 41

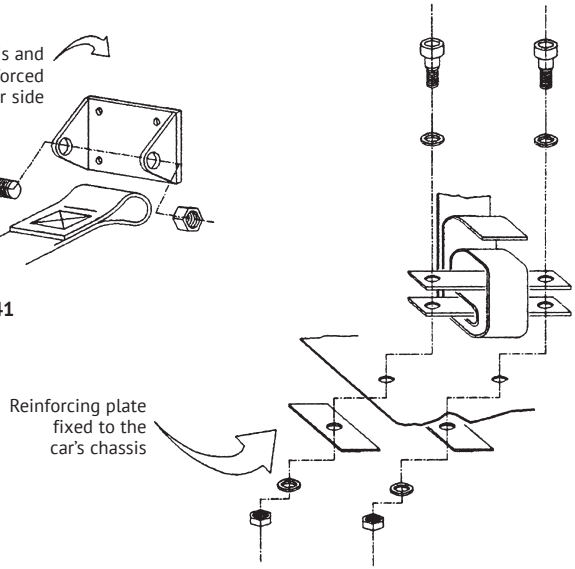

Drawing No. 42

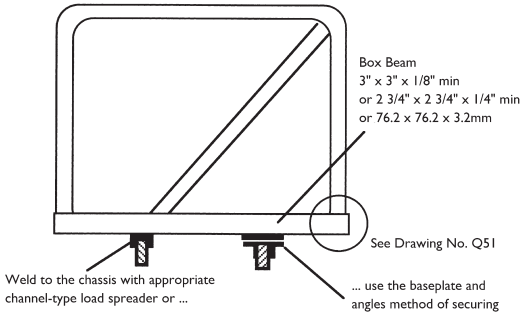

Drawing No. 50

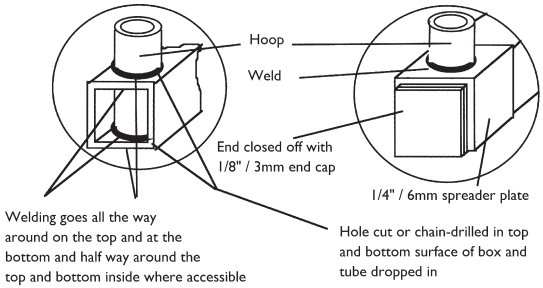

Drawing No. 51

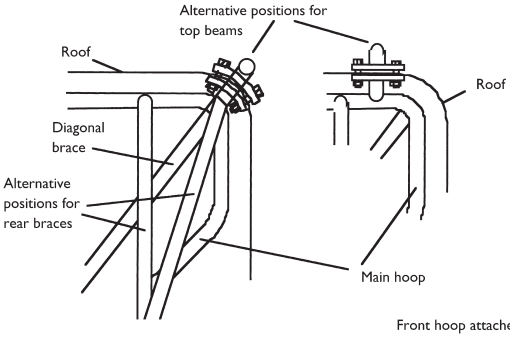

Drawing No. 52

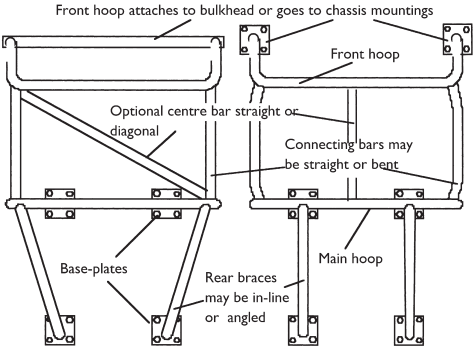

Drawing No. 53

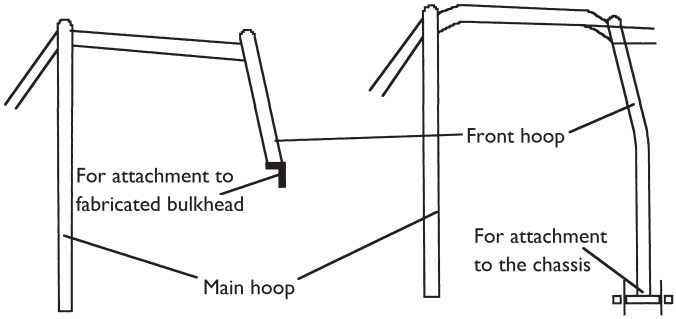

Drawing No. 54

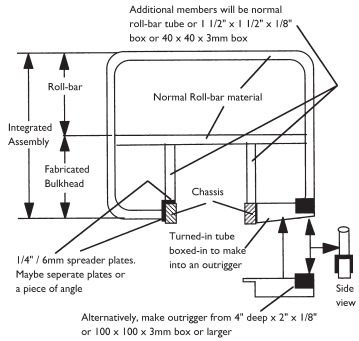

Drawing No. 55

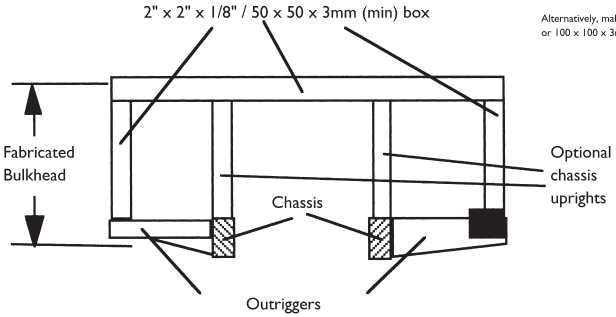

Drawing No. 56

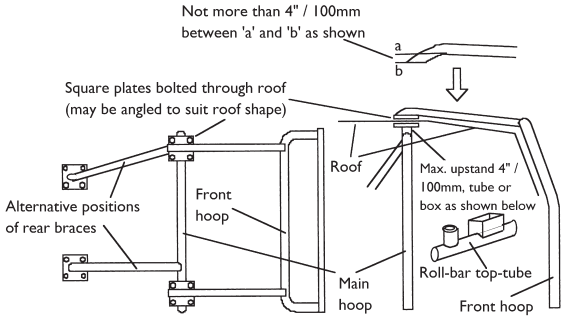

Drawing No. 57

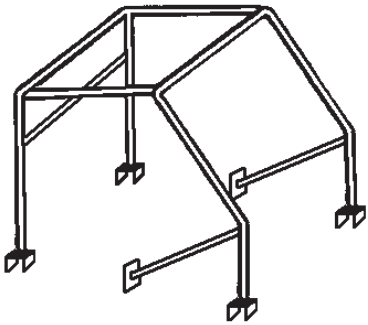

Drawing No. 58

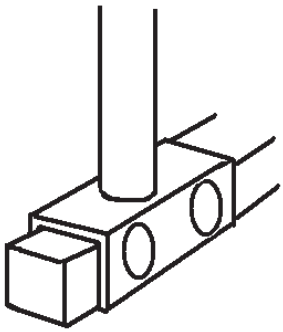

Drawing No. 59

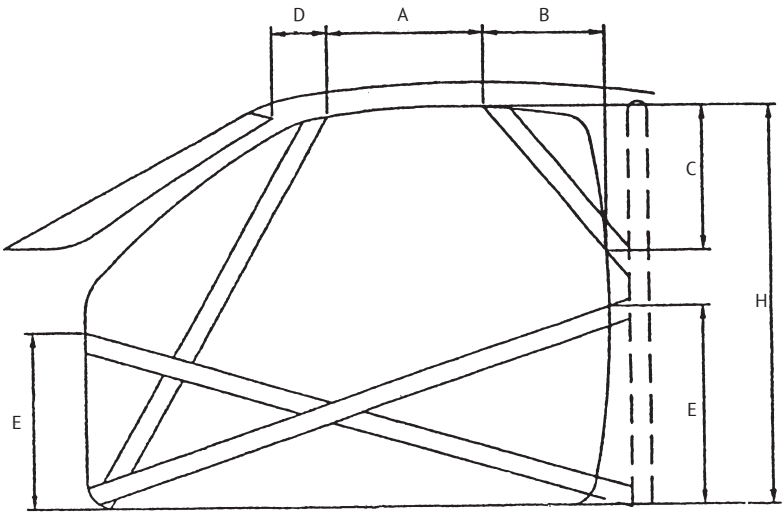

Drawing No. 43

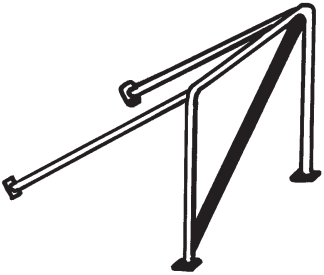

Drawing No. 60(i)

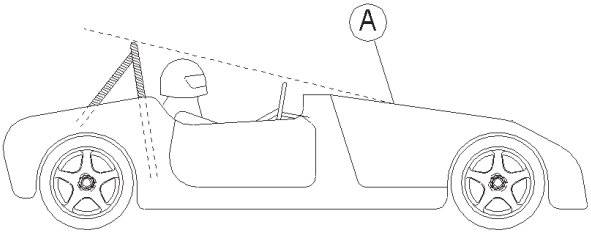

'A' is the substantial structure forward of the driver such as to act as the front rollbar. No part of the driver's helmet is to pass through a line struck from the top of the rollbar to this structure.

Drawing No. 60(ii)

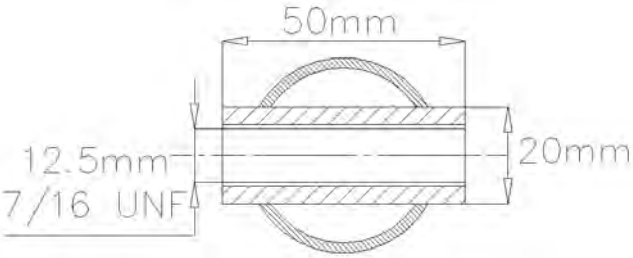

Drawing No. 44

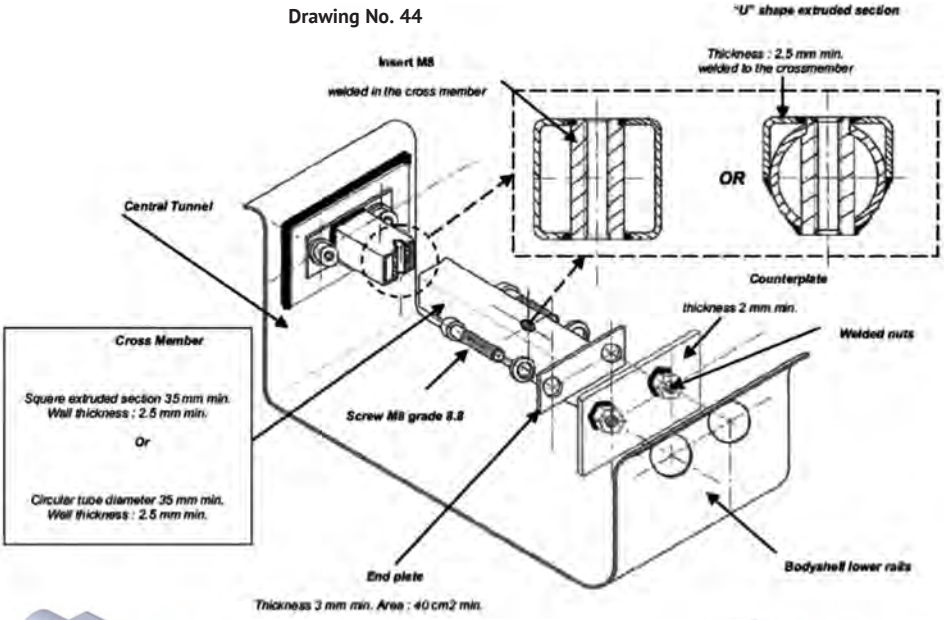

Drawing No. 64(a)

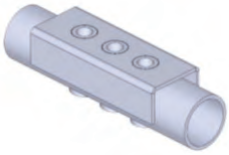

Drawing No. 64(b)

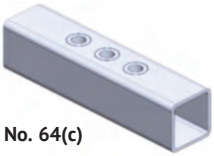

Drawing No. 64(c)

Drawing number 61

Dimension B Height over front seats (measured between 0° and 15° towards the rear in relation to the vehicle using the test seat weight)

Dimension C Width for the front seats

Dimension D Height over the rear seats (measured as Dimension B)

Dimension E Width of rear seats.

Dimension F Distance from the centre of the hub of the steering wheel to the brake pedal (if the steering wheel is adjustable it must be placed in the median position).

Dimension G Length from the centre of the hub of the steering wheel to the bulkhead of the rear seat, or if possible to the rear face of the rear seat (maximum tilt 15°) If the steering wheel is adjustable it must be placed in the median position.

B and D are measured between the bottom of the seat compressed by the test seat weight, the axis of which is vertical, and the ceiling (padding compressed). If the seats are separate, the measurement is taken in the middle of each of the seats. In the case of longitudinally adjustable seats, the seats will be placed in the median position. If there is a bench seat in the front, the measurement is taken at 25cm from the centreline of the car.

C and E are the maximum widths measured along the vertical plane passing through the axis of the standard test seat weights placed on the seats, being able to be freely maintained over a height of at least 25cm and a length of at least 40cm. The minimum dimensions (in cm) according to the cylinder capacity (in cm^3) are the following, with H = F+G

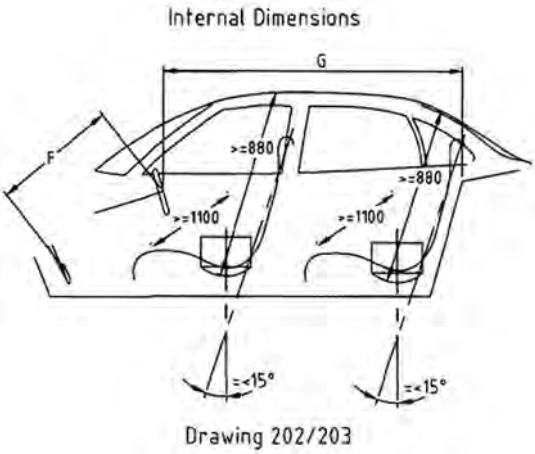

Engine Capacity	*Dim. B*	*Dim. C*	*Dim. D*	*Dim. E*	*Dim. H*
From 0 to 1,300	Free	90	Free	90	180
From 1,300 to 2,000	88	110	88	110	200
Over 2,000	93	120	93	120	210

Drawing number 62

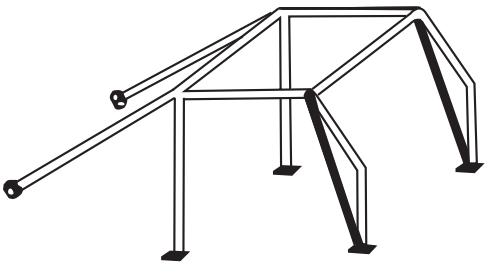

Drawing number 63

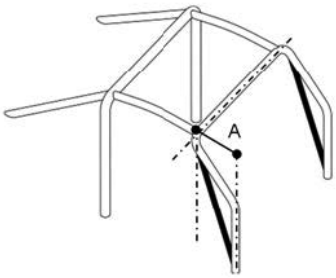

Drawing number 65

British Motor Sports Training Trust

This charitable trust was constituted by a Trust Deed first executed on the 19th May 1977, and it has been instrumental ever since in providing grant aid to assist with the safety training of volunteer motor sport officials and marshals as well as – through its Safety Development Fund – in providing further grant aid to assist safety related initiatives undertaken by Motorsport UK Registered Clubs and Recognised Groups in specific areas including those related to Event Safety and Venue Safety improvements, as well as the specialist work of Medical and Rescue Units and Recovery crews.

For further information regarding the work of the Trust, and details of the available grant categories – including guidelines on eligibility and how to apply – please see the Trust's website at www.bmstt.org

The British Motor Sports Training Trust is UK motor sport's own registered charity, and donations from organisations, clubs and individuals to help continue the work of the Trust are always most welcome.

Rod K Parkin, Chairman of the Trustees

British Motor Sports Training Trust

Motorsport UK, Bicester, OX27 8FY

The British Motor Sports Training Trust is a UK Registered Charity (No. 273828)

(L) Permitted Tyres

General

1. Certain Championships define the types of tyre permitted to be used and Competitors are recommended to check the requirements in all event and championship regulations.

Production Tyres

2. The tyres in List 1A are regarded by the manufacturers as Standard Road Tyres. They may have wear bars moulded into the tread to show 1.6mm remaining pattern depth. These are set at six positions around the circumference of the tyre and extend across its width. If any of the wear bars are level with the tread surface at pre-event scrutineering the vehicle will not be allowed to compete.

2.1. Tyres with sidewall markings removed will be prohibited in all events unless they are correctly marked 'Retread' or 'Remould'.

2.2. For Production Saloon and Sports Car racing, only standard road tyres in List IA are permitted, and only to rim and tyre sizes as laid down for specific car models on Production Car Specification Sheets.

2.3. All tyres must carry an EEC 30 or EEC 108 'E' mark. It is illegal to supply for public highway use new or part-worn tyres that are not 'E' or 'e' marked tyres (ie marked in accordance with requirements of EEC Regulation 30, 30.1, 30.2 or EC Directive 92/23). This includes VR and ZR tyres (previously exempt).

All new tyres sold from 01.11.2012 must be labelled in accordance with EU Reg 1222/2009

All new tyres produced after 01.11.2014 must be marked in accordance with UNECE Regulation 117
(ie carry S, W and R markings)

2.4. Some tyres in Lists 1A and 1B may have additional sidewall markings denoting specific fitment at OE These markings may be in the vicinity of the range name or after the size designation (eg NO, MO,*). Such tyres with additional markings are accepted as equivalent to tyres designated in Lists 1A and 1B.

2.5. Tyres marked with an asterisk in Lists may be removed from the lists with effect from 31 December 2022. See Official bulletins for details. Additional tyres may be added to the lists at any time (see Official bulletins for details).

2.6. Run-flat variants of tyres listed in 1A are permitted. Tyre pressure monitoring devices should be used on run-flat tyres.

2.7. Tyre List 1C is solely for Competition Tyres complying with EEC Regulation 30 but not regulation 117.

Tyres for All Rallies

3. For Rallies, all tyres used on the Public Highway must comply with the relevant Motor Vehicle Construction and Use Regulations, in addition to requirements specified in R18.4. (Road Rallies), R19.7. (Historic Road Rallies), R20.1.14 (Endurance Road Rallies), R.48.5 (Stage Rallies) and R49.10 (Historic Stage Rallies), and the following regulations.

3.1. At all times during an event the tread depth must not be less than 1.6mm over at least three quarters of the tread pattern.

3.1.1. Tyres marked 'For Racing Purposes Only' are prohibited on all Rallies

Tyres for Road Rallies

3.2. For all Road, Navigation, Targa Road and Historic Road Rallies tyres are free subject to the following;

(a) Tyres on the current FIA List of Asphalt Eligible Tyres are permitted; including sizes not homologated;

(b) Tyres on List 1B (from 2020) and List 1C are not permitted other than the Avon CR28, the Avon CR6ZZ and the Pirelli P7 Corsa Classic, for pre 1/10/90 registered cars, the Yokohama A021R (manufactured before 01/11/14), and the Yokohama Advan A052;

(c) Tyres marked for "competition use" are not permitted with the exception of tyres on List 6 and 3.2a.

3.2.1. For Endurance Road Rallies only tyres on List 4 are permitted.

Tyres for Stage Rallies

3.3. FIA homologated tyres are recommended for asphalt stage rallies. All tyres contained in Lists 1A, 1B and 6 are authorised for use on all sealed surface stage rallies. Only tyres from List 6 are authorised for use on unsealed surface stages taking place on the national forest estate (FCS/FCE/NRW).

Additionally, for Single Venue Stage Rallies, where no part of the itinerary traverses the Public Highway, tyres from List 1C are authorised.

Please bear in mind that road legal List 1A tyres and some specialist motor sport tyres may not have strengthened sidewalls more normally used in the construction of tyres in List 1B and Rally tyres homologated by the FIA.

3.3.1. With the exception of tyres specified in List 1A, 1B (1C SVSRs where permitted) and 6, hand cutting is permitted, but only for the purpose of introducing additional grooves no deeper than those moulded into a new tyre. Hand cutting in order to increase the depth of existing moulded grooves is prohibited for all tyres.

Note: Throughout these sections an asterisk(*) indicates a requirement for additional information to be printed in the Supplementary Regulations (SRs). Text shown in Italics indicate a Regulation which may be amended in the SRs.
Text shown in red indicates a new or amended regulation for 2022.

58 WORLD TITLES

IN THE FIA WORLD RALLY CHAMPIONSHIP SINCE 1973

MICHELIN PILOT SPORT
The winning asphalt rally tire range,
including the new MICHELIN Pilot Sport A.

MICHELIN

LIST 1A

Production Tyres Suitable for Competition

4. It is prohibited to re-groove tyres in this list.

ALTENZO
- *Sports Equator
- *Sports Comforter +

AVON
- *ZZ 5
- *ZT 5
- ZV 7
- ZT 7

BLOCKLEY
- BR1 (pre 1/10/90)

BRIDGESTONE
- *RE 070
- *Potenza RE040
- Potenza RE050, RE050A
- *Potenza RE070
- *Adrenalin RE002
- Potenza RE070R
- Potenza S007
- *Potenza S02-A
- Potenza S001
- Potenza S005
- Potenza Sport

CONTINENTAL
- *ContiEcoContact EP
- ContiSportContact 2
- *ContiPremiumContact
- ContiEcoContact 3
- ContiSportContact 5
- ContiPremiumContact 5
- ContiEcoContact 5
- ContiPremiumContact 2
- ContiSportContact 3
- ContiSportContact 5P
- SportContact 6
- PremiumContact 6
- EcoContact 6
- SportContact 7

COOPER
- *CS2
- *Zeon CS Sport
- CS7 (incl. CS7 Avon Academy)

DUNLOP
- SP Sport 01
- SP Sport 600
- SP Sport Aquajet/CB73
- SP Sport Maxx GT
- SP Sport Maxx RT
- SP Sport Blue Response
- SP Sport Maxx RT2
- *SP Sport Maxx Race
- SP Sport Maxx Race 2
- SP Street Response 2
- SP Sport Maxx
- SP Sport FastResponse

FIRESTONE
- *Firehawk SZ 90u
- *TZ 300u

GITI
- Sport S1
- Sport S2
- GitiSynergy E1

GOODYEAR
- Eagle F1 Asymmetric 2
- Eagle F1 Asymmetric 3
- Efficient Grip Performance
- Eagle F1 SuperSport
- Eagle F1 SuperSport R
- Eagle F1 SuperSport RS
- Efficient Grip Compact
- Efficient Grip Performance 2
- Eagle F1 Asymmetric 5

GT RADIAL
- Sport Active
- Sport Active 2
- FE2

HANKOOK
- Kinergy Eco
- Kinergy Eco2
- Ventus S1 Evo2
- Ventus Prime 3
- Ventus V12 Evo2
- Ventus Prime 2
- Ventus S1 Evo3
- [1]Ventus S1 EvoZ

KUMHO
- Ecsta PS91

MICHELIN
- Pilot Sport (Excludes Pilot Sport Cup and all competition tyres)
- Pilot Sport 3
- [1]Pilot Sport Cup 2
- Pilot Sport 4 (including PS4S)
- Pilot Sport PS2
- Pilot Exalto PE2

NANKANG
- NS–20
- AS–1
- XR–611
- AS–2

PIRELLI
- P Zero Nero
- *P Zero Rosso & Direzionale
- P Zero
- *Cinturato P7
- CA67
- CN12
- P7
- P Zero Nero GT

SEMPERIT
- *Comfort Life 2
- *Speed Life 2

TOYO
- Proxes T1-R
- Proxes T1 Sport
- 330
- 310
- NanoEnergy 3
- Proxes CF2
- Proxes Sport
- Proxes TR1
- Proxes Comfort

UNIROYAL
- RainSport 3
- RainExpert 3
- RainSport 5
- RainExpert 5

VREDESTEIN
- *Sportrac 5
- *Ultra Vorti
- *Vorti R

YOKOHAMA
- A 008 (Advan HF Type D)
- A 539
- Advan Sport V103
- *Advan Neova AD07
- AS 01 (S Drive)
- AC 02 (C Drive 2)
- Advan Sport V105
- Blue Earth AE50

[1] Only applicable where an OE fitting. Contact Motorsport UK Technical Department for verification.

Ignite your BLUE.

Scan here to
discover more

TOYO TIRES

COOPER TIRES RALLY RANGE

COOPER M+S

COOPER M+S EVO

COOPER DISCOVERER GRAVEL DG1

COOPER RALLY CLASSIC TARMAC CT01

COOPER DISCOVERER TARMAC DT1

COOPER DISCOVERER TARMAC DT02

DRIVEN BY SUCCESS

COOPER DISCOVERER TARMAC DTW02

MADE IN THE UK

Ready to boost your performance with Cooper Tires?
Get in touch with our motorsport department
coopermotorsport@coopertire.com

www.coopertire.co.uk/motorsport-tires

COOPER TIRES

COOPER TIRES ESTABLISHED 1914.

COOPER TIRES RALLY RANGE

SIZE		COMPOUND	RIM RANGE	RIM USED	MEASURED @ PSI	MEASURED @ Bar	DIAMETER In	DIAMETER mm	SECTION WIDTH In	SECTION WIDTH mm	TREAD WIDTH In	TREAD WIDTH mm	REVOLUTIONS Mile	REVOLUTIONS Km
COOPER M+S														
165/80R13		XS / S / M / H	4.5 - 5.5	4.50	30	2.1	23.5	596	6.50	165	5.59	142	585	533
185/70R13		XS / S / M / H	4.5 - 6.0	6.00	30	2.1	23.5	596	7.48	190	6.61	168	858	533
160/605R15	(185/60R15)	S / M	5.5 - 6.5	6.50	30	2.1	23.6	599	7.83	199	6.30	160	855	531
160/640R15	(195/65R15)	S / M / H	5.5 - 6.5	6.50	30	2.1	25.0	635	8.11	206	6.38	162	807	501
170/650R15	(205/65R15)	S / M / H	6.5 - 7.5	6.50	30	2.1	25.4	645	8.43	214	6.93	176	794	493
COOPER M+S EVO														
215/60R15		S / M / H	6.5-7.5	7.00	30	2.1	25.4	645	8.46	215	7.32	186	794	493
COOPER DISCOVERER GRAVEL DG1														
175/70R15		XS / S / M / H	6.0-7.0	6.00	30	2.1	24.5	622	7.99	203	6.50	165	824	512
205/65R15 RF*		XS / S / M / H	6.5-7.0	7.00	30	2.1	25.3	643	8.66	220	7.05	179	797	495
COOPER DISCOVERER TARMAC DT1														
195/50R15		W / XS / S / M / H	6.0-7.5	6.50	30	2.1	22.7	576	7.68	195	7.56	192	888	552
195/50R16		W / XS / S / M / H	6.0-7.5	6.50	30	2.1	23.6	601	7.68	195	7.56	192	855	531
205/45R17		W / XS / S / M / H	6.5-7.5	7.00	30	2.1	24.4	620	7.91	201	7.80	198	827	514
COOPER DISCOVERER TARMAC DT02														
225/40R18		XS / S / M / H	7.5-9.0	8.00	30	2.1	25.4	644	8.90	226	8.50	216	796	494
COOPER DISCOVERER TARMAC DTW02														
225/40R18		W	7.5-9.0	8.00	30	2.1	25.6	650	8.66	220	8.27	210	788	490
COOPER RALLY CLASSIC TARMAC CT01														
195/50R13		W / XS / S / M / H	6.0-7.0	6.00	30	2.1	20.8	528	7.60	194	7.30	185	970	602
225/45R13		W / XS / S / M / H	8.0-10.0	9.00	30	2.1	20.9	530	8.90	226	8.27	210	966	600
215/45R15		W / XS / S / M / H	7.5-9.0	8.00	30	2.1	22.6	575	8.74	222	8.07	205	891	554
235/45R15		W / XS / S / M / H	8.0-9.0	8.00	30	2.1	23.6	599	9.17	233	8.85	225	855	531
285/40R15		W / XS / S / M / H	10.0-11.0	10.00	30	2.1	23.9	607	11.10	282	10.80	274	844	524
235/40R17		W / XS / S / M / H	8.0-9.0	8.50	30	2.1	24.1	612	9.53	242	8.70	221	837	520

W = Wet / XS = Xtra Soft / S = Soft / M = Medium / H = Hard | RF = Reinforced | All tyres are E-marked (unless marked *)

FOR CHAMPIONSHIP-WINNING PERFORMANCE

COUNT ON COOPER®

Ready to boost your performance with Cooper Tires?
Get in touch with our motorsport department
coopermotorsport@coopertire.com

www.coopertire.co.uk/motorsport-tires

COOPER TIRES®

COOPER TIRES ESTABLISHED 1914.

- Advan Fleva V701
- A 008 P
- GT Special Classic Y350 (pre 1/10/90)
- Advan Sport V107

LIST 1B

Sports/Uprated Tyres Suitable for Competition

5. Clubs wishing to use these tyres in events or championships must apply in writing to Motorsport UK, and SRs must provide for their use. These tyres are prohibited for Production Car Racing.

Some tyres below are available in compounds which are not E-marked. Only those tyres below that are E-marked are valid.

EU Regulation 1222/2009 for tyre labelling exempts tyres designed for use on cars first registered before the 1st October 1990, therefore a number of tyres remaining on list 1b will only be valid for cars registered before this date , those tyres are appropriately annotated below.

It is prohibited to re-groove tyres in this list.

ACCELERA
- 651 Sport (including XTRA)

AVON
- ACB 10 Sport (pre 1/10/90)
- CR6ZZ (Including Sport) (pre 1/10/90)
- Turbospeed CR28 Sport (pre 1/10/90)
- *CR500
- ZZS
- ZZR (8018 & 8019)
- CR27 (pre 1/10/90)

COOPER
- RS3–RS
- Rally Classic CT01 (pre 1/10/90)

CONTINENTAL
- *ContiForce Contact

EXTREME
- VR1 (Marked either V2, S3, S4) (retread)
- VR2 (including NK) (Marked either R7a, R9a, S3, HL) (retread)

GITI
- Sport GTR3

HANKOOK
- Ventus TD

INTERSTATE
- Race DNRT

MAXSPORT
- *RB4 Intermediate (Marked either Hard, Medium) (retread)
- RB5 (Marked either Hard, Medium) (retread)
- RB6 (Marked either Hard, Medium) (retread)

MICHELIN
- Pilot Sport Cup 2
- Pilot Sport Cup 2R

NANKANG
- NS–2R
- AR–1
- CR–1

OTANI
- BM2000

PIRELLI
- CA67
- P Zero Corsa
- P7 Corsa Classic (Pre 1/10/1990 only)
- P Zero Trofeo R
- CN36

TOYO
- *Proxes R888
- *Proxes R1R
- Proxes R888R

YOKOHAMA
- A032 – R (165/70x10 only)
- *A048 – LTS (OE fitments marked LTS in sizes 195/50x16 & 225/45x17 only)
- *Advan Neova AD08R
- Advan A052
- Advan Neova AD08RS

ZESTINO
- Gredge 07R
- Gredge 07RS

LIST 1C

Sports/Uprated Tyres Suitable for Competition

6. Clubs wishing to use these tyres in events or championships must apply in writing to Motorsport UK, and SRs must provide for their use. These tyres are prohibited for Production Car Racing.

Tyres listed on 1b as valid for cars first registered before 01/10/1990 are valid in 1c where fitted to cars first registered after 01/10/1990.

It is prohibited to re-groove tyres in this list.

AVON
- ZZR
- ZZS RT7

COOPER
- RS 3-R

DUNLOP
- Direzza DII
- Direzza DZ03G
- Sport Maxx Race
- Direzza DIII

EXTREME
- VR1 (Marked either W3, W5) (retread)
- VR2 (including NK) (Marked either R5a, W3) (retread)

GITI
- Compete GTR 2

KUMHO
- Ecsta V700 (including V70A) (Any Compound)

MAXSPORT
- *RB4 Intermediate (Marked Soft) (retread)
- RB5 (Marked Soft) (retread)
- RB6 (Marked Soft) (retread)

MICHELIN
- TB15 (including +)
- TB5 (f & r) (including +)

MRF
- ZTR (Marked Trackday)

YOKOHAMA
- A021-R
- A048
- A050

[1] Only applicable where an OE fitting. Contact Motorsport UK Technical Department for verification.

NANKANG TYRES

NS-2R

- **MSA List 1B** approved
- **50% Road / 50% Track** - designed for fast road and track day use
- **Available** in 13" to 20" sizes
- **Endurance compound** for grip lap after lap come rain or shine

AR-1

- **MSA List 1B** approved
- **90% track / 10% road** - designed for the racing driver chasing lap times
- **Available** in 13" to 20" sizes
- **Unique compound** optimised for fast track use

NANKANG TYRES

www.nankangtyre.co.uk

Nankang Tyre UK @NankangTyreUK

LIST 2

See Section T for details of Permitted tyres

7. It is prohibited to re-groove tyres in this list.

LIST 3

Tyres for Sporting Car Trials

8. It is prohibited to re-groove tyres in this list.

MAXXIS
- MA-510N
- ME-3

NANKANG
- CX668
- NA-1

TOYO
- 330

VREDESTEIN
- T-Trac 2

LIST 4

Tyres for Endurance Road Rallies

9. It is prohibited to re-groove tyres in this list.

AVON
- Avanza
- CR6ZZ (not Sport or 6751)
- Ice Touring

COLWAY
- *Road Plus

FALCON
- PC523

FALKEN
- KK07E (10in)
- ZIEX-ZE912

FIRESTONE
- F580C
- *Multihawk Van
- *F580 (Incl. Fuel Saver)
- Vanhawk

PIRELLI
- 190 Snow Control

SPORTWAY
- R1
- R1+

VREDESTEIN
- Quatrac 2

LIST 5

Tyres for Cross Country Events

10. It is prohibited to re-groove tyres in this list.

(Competitive Safaris and Hill Rallies and Point to Point)

See P56.7.4.

LIST 6

Tyres for unsealed surface Stage Rallies:

11. Other than as specified below only the tyres listed here are permitted for stage rallies subject to R.1.1.9.

Cars using wheels of 12in diameter or less are exempt but the tyres may not be hand cut in any form.

Cross Country vehicles with a valid CCLB and for which a suitable fitting is not available may use tyres from Lists 5(a) or 5(b).

Where conditions dictate the Clerk of the Course, with the agreement of the Stewards of the Meeting, may declare the event to be of "Winter Conditions" and suspend the requirement to comply with Tyre List 6.

It is prohibited to re-groove tyres in this list.

ACCELERA
- RA162

AVON
- SFR
- M&S (incl. Cooper)
- M&S Evo (incl. Cooper)

COOPER
- Discoverer Gravel DG1

DMACK
- DMG+
- DMG+2
- DMG1
- DMG2
- DMG3
- Surface Saver
- DMG+22

DUNLOP
- DZ86 R/RW
- DZ87R
- SP61/82
- SP85

FEDERAL
- G10

HANKOOK
- R201
- R202
- R203 NEW
- R203
- R204
- R211
- R213

HOOSIER
- GTS
- GTM
- GTH

KUMHO
- R800
- R900

MAXXIS
- Victra R19

MICHELIN
- FB
- LATCROSS HR/HL
- TL40
- TL
- TZ
- TZS
- LTX Force T
- LTX Force T XL

PIRELLI
- GM
- K
- KM
- XR
- Scorpion XR
- WRC Scorpion K**
- T

MRF
- ZDM3
- ZG1
- ZG2
- ZGM
- ZVH1
- ZG3

YOKOHAMA
- A035
- A035E
- A036
- A053

MAXSPORT
- RB3 Narrow
- RB3 Ultra
- RB3

Specific Regulations for Autotests (M)

(M) Autotests

Organisers' Regulations applying to all events

1. Permits for the organisation of Autotests, Production Car Autotests and AutoSOLOs are issued at the sole discretion of Motorsport UK.

1.1. A Club can only organise an Autotest or AutoSOLO event up to and including Clubman status unless all necessary upgrading criteria for a higher status have been complied with. Permits for Production Car Autotests will only be issued at Clubman status.

1.2. For an Autotest or AutoSOLO to be considered for upgrading to Interclub status it must first be observed in the same format as a Clubman event and have a minimum entry of 15 starters.

Clerk of the Course Duties

2. The duties and responsibilities of the Clerk of the Course at Autotest and AutoSOLO events includes ensuring the following:

(a) The maximum size for any timed test site is 200m by 200m. The 200m applies to the overall length and width of the area on which the test is conducted and not the actual distance covered by a car performing the test;

(b) At all timed tests, all spectators and non-essential Marshals not protected by a solid barrier capable of stopping a car must be separated by rope or fencing at least 10m from the edge of the course, and at least 20m from the Finish Line. Any space at the edge of the course allowed for braking and changes of direction must not impinge on the above distances.

2.1. Every test must have at least one person responsible for:

(a) The general running of the test;

(b) Observing and recording penalties;

(c) Recording the times taken;

(d) Completing the score card with the addition of penalties;

(e) Returning displaced markers to their original position.

2.2. Judges of Fact must be appointed to each test site to adjudicate on excessive sound.

2.3. Warning notices as required by D.31.1 must be displayed.

2.4. Fire extinguishers (minimum 5kg total capacity in units of not less than 2kg) must be available at each test site.

2.5. The Organisers must provide a First Aid Kit.

2.6. A medium sized Spill Kit must be available at each test site.

Supplementary Regulations

3. The Supplementary Regulations must specify:

(a) Details of the tests or when these details will be notified to Competitors;

(b) The number of runs per Driver and how these count towards the results;

(c) The method of identifying cars;

(d) The method of timing and whether or not the timing apparatus is started by the car or by the starting signal;

(e) The starting signal;

(f) Whether carrying a passenger will be allowed or not, or will be compulsory.

Technical Regulations applying to all events

4. Competing Vehicles must comply with the following:

4.1. Body (including Aerodynamics)

(a) Body shape must conform to the original silhouette of the production vehicle and retain the original layout of engine and transmission;

(b) Bumpers can be removed and wheel arch extensions added;

(c) An effective windscreen or Aero-type screen must be fitted;

(d) Any areas of window, opening or transparent material originally specified as part of the vehicle to provide Driver visibility must remain consistent with the original specified dimensions and position. No additional areas may be added. If a vehicle is equipped with any such additional areas they must be rendered opaque before the vehicle is allowed to compete;

(e) Vehicles not complying with the above will be classified as Specials.

4.2. Engine must comply with J.5.4.

4.3. Silencing must comply with silencing levels in J.5.17.

4.4. Safety: all open cars and Specials are recommended to fit safety roll-over bars to at least K.1.6.1.

4.5. The following parts of Section J remain unmodified by this section: Chassis; Seating; Suspension; Brakes; Steering; Tyres; Cooling; Oil Systems; Fuel Systems; Electrical Systems; Weight/Ballast; Exhausts; Silencing.

4.6. All vehicles should carry a small spill kit complying with J5.20.13.

4.7. Tyres from Lists 1b or 1c are not permitted.

Miscellaneous

5. *Classes are free, but the class structure must be stated in the Supplementary Regulations (SRs).*

5.1. *Any entered vehicle must be a Car for vehicle tax purposes, and currently registered and taxed, unless otherwise specified in the SRs.*

5.2. Whilst on the Public Highway, vehicles must comply with all Statutory Regulations as to Construction and Use.

Note: Throughout these sections an asterisk(*) indicates a requirement for additional information to be printed in the Supplementary Regulations (SRs). Text shown in Italics indicate a Regulation which may be amended in the SRs. Text shown in red indicates a new or amended regulation for 2022.

5.3. Hybrid, Electric, Battery-powered, and Light Goods Vehicles may compete in appropriate Classes, subject to SRs.

5.4. Production cars whose original wheelbase is less than that specified in J.5.20.7 are permitted.

Test Layouts

6. The route must be made available to all Drivers before any test.

6.1. There must be no optional direction of travel, except as specified in 7.7.

6.2. Clarification of where and how a change of direction or spin turn may be made without incurring a penalty must be available on request to all Competitors before the start of any test.

6.3. Practising for tests is not permitted.

6.4. The start and finish of all tests must be in a forward direction.

6.5. All drivers should have the opportunity to walk the course before competing. If not, the tests must be arranged such that the whole of the course is visible to the Driver from the start line

6.6. *Markers should be not less than 1m in height, unless otherwise specified in the SRs.*

Test Procedures

7. Drivers will be considered under Starter's orders when instructed by an Official to proceed to the Start line.

7.1. Drivers then failing to proceed may forfeit their run or may be penalised in accordance with Table M.7.

7.2. A start will only be valid if made under the vehicle's own power.

7.2.1. Timing will start when the leading wheel of the front axle crosses the start line.

7.3. When a car is required to stop astride a line, the line must be between its front and back axles and all the area of the tyres in contact with the ground must be seen to have crossed the full width of the line.

7.4. Similarly, if a car is required to cross a line with all four wheels, all tyre contact area must be seen to be clear of the line.

7.5. Timing at completion of a test must be based on the leading wheel (on the front axle) crossing the Finish line.

7.6. Penalties will be applied for failure to cross the line with both front wheels, or alternatively, if timed to a flying finish, for crossing the baulk line. In the event of Competitors performing a test incorrectly, their times must still be recorded, together with the appropriate penalties.

7.7. In any diagram illustrating a test, the dimensions should be approximate and for guidance only. Indications of the direction of travel of the competing cars when crossing a line, or passing between markers, must be shown unless specified otherwise (ignoring 'shunts' to avoid markers).

7.8. *A maximum penalty (see Table M.7 shall be applied if a competitor fails to follow the prescribed test route by passing the wrong side of one or more markers, crosses with both leading wheels a marked test line in the wrong direction, out of the prescribed sequence, or too many/few times, without correcting the mistakes by returning to the point where they deviated from the test diagram, before crossing the test finish line, unless otherwise specified in the SRs.*

7.9. In changes of direction and spin turns, either lock can be used (unless the test diagram specifically states otherwise). It is recommended for safety reasons that Drivers are on the 'inside' during spin turns.

7.10. Clerks of the Course wishing to define direction of travel between markers should include any necessary marked line(s).

7.11. In the event of re-run caused by a timing failure, the greater number of penalties incurred in either run will be added to the time taken in assessing the performance on that test.

7.12. Each test layout must be attempted at least twice, or more if specified in the SRs, with the exception of events organised for cars of Periods A – D.

Marking

8. Judges must be appointed to each test to adjudicate

On:

(a) False starts;

(b) Crossing/failing to cross marker lines;

(c) Touching markers and not following the correct route.

8.1. Competitors will be provided with a score card for the Organisers to record times and penalties at the completion of each test run.

8.2. Marks will be lost for time taken (if applicable) and for any infringements of the test instructions, such as striking a marker or crossing a boundary line.

8.3. Each competitor's worst score on any test layout may be discarded in arriving at the total penalties for the event, if specified in the SRs.

Results

9. To be classified as a finisher, Competitors must complete not less than half of the tests and must hand in their score card to Officials within 15 minutes of all other Competitors completing the final test.

9.1. Competitors will start with zero marks.

9.2. All Class awards must be calculated on the basis of penalty marks lost, with the Competitor incurring the least penalty points being judged the winner.

9.3. *In the event of a tie, the Competitor who was first to have the lesser penalty from the start will be adjudged the winner, unless otherwise specified in the SRs.*

9.4. *Performance will be assessed as in Appendix 1 Table M.7, unless otherwise specified in the SRs.*

Competitor's Regulations applying to all events

Licences

10. Drivers, and where applicable passengers, must produce a valid Club membership card and Competition Licence (Section H, Appendix 1).

10.1. Competitors must declare on their entry form if they hold a valid, full RTA Licence.

10.2. Competitors holding a valid, full RTA licence may use any vehicle allowed by the Technical Regulations.

10.3. Passengers under 18 years old will not be considered as Competitors for the purpose of Club membership.

Instructions to Competitors

11. Before the start, cars and Competitors (including any Passengers) must be checked for eligibility.

11.1. Any Competitor not reporting as instructed may be fined, penalised, disqualified or forfeit their starting position.

11.2. Except where competing in Period Defined Vehicles (Non-Rally) Categories A-F, it is recommended that drivers wear, as a minimum, a lap belt on any timed test.

11.3. *A car may not be entered to compete for the same award more than twice, unless otherwise specified in the SRs, and in all circumstances it must be driven by different Drivers.*

Autotests – Specific Regulations

Must be organised in accordance with 1 to 11 and the following:

12. Passengers are not allowed on Autotests on any Timed Tests.

Unlicensed Drivers and Minimum Ages

13. Entries may be accepted from Drivers who are aged 16 years and over who do not have a valid, full RTA Licence, subject to the following:

(a) The vehicle must by definition be a 'Touring Car';

(b) Engine capacity must not exceed 1400cc;

(c) Forced induction is not permitted.

Test Layouts

14. Cars must not be allowed to travel more than 100m (between manoeuvres) without having to stop astride a penalty line and reverse or drive clear of the line, or manoeuvre in a garage or box.

14.1. Competitors must either stop astride a penalty line or make a change of direction of at least 90° at a distance of not more than 25m before the finish line.

14.2. Any 'garage' used in an Autotest must have a minimum length of 6m and a minimum width of 3.5m.

14.3. When Competitors are required to perform a 180° turn in a box, the size of the box should be sufficient to contain a circle of 16m diameter.

14.4. All lines, or pairs of adjacent markers, forming part of any test must be a minimum of 3.5m long or apart.

Additionally, where the tests are "all forwards"

Test Layouts

15. In tests where the direction of travel is all forward and where there are no stop astride penalty lines (other than the Start and Stop lines), Competitors must not be allowed or required to travel more than 50m without changing direction by:

(a) Executing a turn of over 180° around a single marker; or

(b) Changing direction through a three marker line either in slalom fashion or by completing a turn of between 90° and 180°; or

(c) Changing direction through a three marker triangle whose base is at right angles to the original line of travel requiring Competitors to turn through 90° from the line of entry.

15.1. Whichever of the above methods is used to change direction, this will not preclude the inclusion of less severe slalom manoeuvres which produce turns of less than 90° being incorporated between the mandatory directional changes every 50m.

15.2. All lines, or pairs of adjacent markers, forming part of any all-forward test must be a minimum of 3.5m and a maximum of 5m long or apart.

15.3. See Appendix 1, Drawing number 15. Example of a test showing all of 15, 15.1, and 15.2 elements in use.

Production Car Autotests – Specific Regulations

Must be organised in accordance with 1 to 11 and the following:

16. The SRs for an event will state whether cabriolet/Sports Cars will compete with the hood erected or a hardtop fitted, or not.

16.1. A passenger must be carried in all Timed Tests.

16.2. The Passenger must occupy the seat alongside the Driver and, except where competing in a Period Defined Vehicle (Non-Rally) Categories A-F, wear a properly fastened and approved seat belt at all times during the test.

16.3. No other Passenger is allowed.

16.4. The passenger in a Touring Car, or a cabriolet/Sports Car with the hood erected or a hardtop fitted, must be aged 12 years or over and be at least 135cm in height.

16.5. The passenger in a cabriolet/Sports Car without the hood erected or hardtop fitted must be aged 16 years or over and be at least 135cm in height.

Unlicensed Drivers and Minimum Ages

17. Entries may be accepted from Drivers who are aged 14 years and over who do not have a valid, full RTA Licence, subject to:

(a) The vehicle must by definition be a "Touring Car";

(b) The vehicle engine capacity must not exceed 2000cc including forced induction;

(c) A passenger must be carried who holds a valid, full RTA licence and be experienced in Autotests or AutoSOLOs.

Test Layouts

18. All lines, and pairs of adjacent markers, forming part of any test must be a minimum of 3.5m long or apart.

18.1. Any 'garage' must have a minimum length of 6m and a minimum width of 3.5m.

18.2. When Competitors are required to perform a 180° turn in a box, the size of the box must be sufficient to contain a circle of 16m diameter.

18.3. Each test must be designed so that a Competitor is not expected to engage reverse gear more than four times (ignoring manoeuvres to correct mistakes).

Technical Regulations

19. Every PCA car must have been in series production and on general catalogued sale, available from stock through normal retail dealer outlets in the UK.

Additionally, where the tests are "all forwards"

20. Where there are no stop astride penalty lines (other than the Start and Stop lines), Competitors must not be allowed or required to travel more than 50m without changing direction by:

(a) Executing a turn of over 180° around a single marker; or

(b) Changing direction through a three marker line either in slalom fashion or by completing a turn of between 90° and 180°; or

(c) Changing direction through a three marker triangle whose base is at right angles to the original line of travel requiring Competitors to turn through 90° from the line of entry.

20.1. Whichever of the above methods is used to change direction, this will not preclude the inclusion of less severe slalom manoeuvres which produce turns of less than 90° being incorporated between the mandatory directional changes every 50m.

20.2. All lines, or pairs of adjacent markers, forming part of any all-forward test must be a minimum of 3.5m and a maximum of 5m long or apart.

20.3. See Appendix 1, Drawing number 15. Example of a test showing all of 20, 20.1, and 20.2 elements in use.

AutoSOLOs – Specific Regulations

Must be organised in accordance with 1 to 11 and the following:

21. The Supplementary Regulations for an event will state whether cabriolet/Sports Cars will compete with the hood erected or hardtop fitted, or not.

21.1. A passenger may be carried on any Timed Tests.

21.2. The Supplementary Regulations for an event will specify whether the driver can elect to carry a passenger or not. If carried, the Passenger must occupy the seat alongside the Driver.

21.3. One Passenger may be carried in each competing car to assist in giving directions to the Driver. Once the event has started, the number of occupants of the car must not be varied.

21.4. The Driver, and where carried, the Passenger, must wear a properly fastened and approved seat belt at all times during the test, except where competing in a Period Defined Vehicle (Non -Rally) Categories A-F.

21.5. No other passenger is allowed.

21.6. The passenger in a Touring Car, or a cabriolet/Sports Car with the hood erected or a hardtop fitted, must be aged 12 years or over and be at least 135cm in height.

21.7. The passenger in a cabriolet/Sports Car without the hood erected or hardtop fitted must be aged 16 years or over and be at least 135cm in height.

Unlicensed Drivers and Minimum Ages

22. Entries may be accepted from Drivers who are aged 14 years and over who do not have a valid, full RTA Licence, subject to:

(a) The vehicle must by definition be a 'Touring Car';

(b) The vehicle engine capacity must not exceed 2000cc including forced induction;

(c) A passenger must be carried who holds a valid, full RTA licence, and be experienced in AutoSOLOs.

Test Layouts

23. Only sealed surfaces can be used for AutoSOLO tests which must be run in an all-forwards direction.

23.1. The course must consist of a series of gates, slaloms, and turns of at least 90° every 60m.

23.2. The maximum spacing of cones in a slalom along the line of the test is 20m.

23.3. Turns of over 90° must be on a minimum radius of 5m.

23.4. All lines, or pairs of adjacent markers, forming part of any test must be a minimum of 3.5m and a maximum of 5m long or apart.

23.5. A typical test is illustrated in Appendix 1, Drawing number 23.

Technical Regulations

24. Every AutoSOLO car must have been driven to the event, must be currently registered (no trade plates), taxed, insured and, where appropriate, in possession of a valid MOT

Appendix 1: Drawing and Table

Drawing number 15

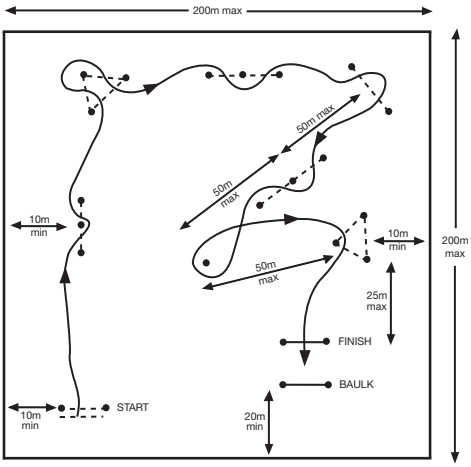

Drawing number 23

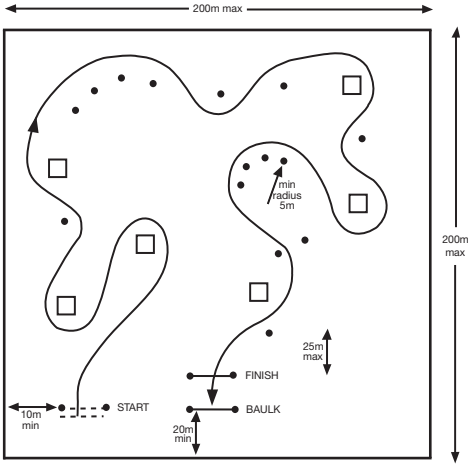

☐ = Note 23.3

TABLE M.7	Marks lost		
	AutoSOLO	*Autotest*	*PCA*
(a) Each minute late in reporting at the start or a restart	5	5*	5*
(b) Not attempting or being ready to attempt a test when instructed to do so	20*	20*	20*
(c) Not performing a test correctly, other than in (d) or (e) or not completing the test or making a false start	20*	20*	20*
(d) Striking any barrier, wall or marker or crossing the boundary of a test (per mistake)	5	5	5
(e) Failing to cross or stop at any line or specified position as required in a test (per mistake)	5	5	5
(f) Every second (and fraction) taken to complete test	1 and fraction	1 and fraction	1 and fraction

*Plus the lowest by any competitor in the class making an attempt correctly on that run.
The maximum penalty (including time) for any test cannot exceed penalty (b) or (c) above.
All unless otherwise specified in the SRs.

A Summary of Key Requirements

Maximum Test Area	Autotest with Reversing 200m x 200m	Autotest all Forwards 200m x 200m	Production Car Autotests 200m x 200m	"Common Rules" Test Area for Autotest 200m x 200m	AutoSolo 200m x 200m
Surface	Free	Free	Free	Free	Sealed
Cone height "should" be	1m	1m	1m	1m	1m
Gate width	3.5m min	3.5m min – 5m max	3.5m min	3.5m – 5m	3.5m min – 5m max
Maximum distance before manoeuvres	100m	50m	50m	50m max	60m
Reverse gear engagements	Free	Should be none!	4 max	"None"	Should be none!
Turns over 90°	Free	Free	Free	Free	min 5m radius
180° turn in box	16m dia min	16m dia min	16m dia min	16m dia min	min 5m radius (10m Ø)
"Garage" size (minimum)	6m x 3.5m	N/A	6m x 3.5m	N/A	N/A
Slalom spacing					20m max
Technical					
MOT	No – if SR state not needed	No – if SR state not needed	No – if SR state not needed		Yes
Tax	No – if SR state not needed	No – if SR state not needed	No – if SR state not needed		Yes
Minimum age driver	16	16	14		14
Maximum cc	1400*	1400*	Touring car – 2000cc* inc forced induction		Touring car – 2000cc* inc forced induction
Passenger allowed	No	No	Mandatory – Must have Full RTA Licence and Autotest experience if driver does not		Subject to SRs
Minimum age passenger	None allowed	None allowed	Closed Car = 12 Open Car = 16 If driver has Full RTA licence and Autotest experience		Closed Car = 12 Open Car = 16 If driver has Full RTA licence and Autotest experience
Type of car – young driver	Touring car	Touring car	Touring car		Touring car
Battery powered and light commercial vehicles	Subject to SRs	Subject to SRs	Subject to SRs		Subject to SRs
Must be driven to event	No	No	No		Yes

Note: Section J5 applies in addition to Section M.

*** Unlimited when driver holds a Full RTA Licence.**

SPECTATE SAFELY!

ARI NEEDS **YOU** TO

Be alert!
Always expect the unexpected
Stay at the designated spectator areas
Remember that in an accident anything can happen
Always follow the instructions of the marshals
Your safety – Your life

ONLY A SAFE RALLY IS A GOOD RALLY

#AriNeedsYou RALLY FUTURE motorsportuk.org

Specific Regulations for Autocross and Rallycross (N)

(N) Autocross and Rallycross

Autocross and Clubcross Events

Organisers' Regulations

1. Permits for Autocross and Clubcross events are issued at the sole discretion of Motorsport UK and are subject to prior approval of the track details.

1.1. A Club will only be allowed to organise an Autocross event of up to Interclub status unless Motorsport UK has specifically approved an application for higher status.

1.1.1. A Club will only be allowed to organise a Clubcross event if in possession of a Clubman grade Permit.

Track Criteria

2. The requirement for a Track Licence will be waived, subject to approval of the Track Plan for the proposed course.

2.1. The Track Plan must be submitted to Motorsport UK for approval with the Permit application and must be on a sheet A4 scale or larger. It must include:

2.1.1. Name of the organising Club, date of event and name of venue.

2.1.2. Length of course (per lap).

2.1.3. Length of longest straight.

2.1.4. Position of the Start/Finish line and direction of travel.

2.1.5. Minimum width of course.

2.1.6. Position of paddock and spectator enclosures and their distances from the course.

2.1.7. Type of fencing surrounding enclosures (a post and rope fence is the minimum Permitted).

2.1.8. Position and type of protective barriers.

2.1.9. Distance from the course to all boundary lines.

2.1.10. Types of boundaries (ie hedge, fence, wire; if wire: mesh, plain or barbed).

2.1.11. Type of course markers.

2.1.12. Number of Judges required to ensure that all course markers can be overseen by a Judge.

2.1.13. Siting of Timekeeper, Flag Marshals, fire, emergency and first aid equipment and ambulance.

2.1.14. Number of cars proposed to start consecutively (see 2.13).

Course Layout

2.2. The course should not include any straight exceeding 200m long, and all straights must be followed by a corner of at least 90°, off-setting the course from its original line by at least twice the width of the track.

2.2.1. The Start line should be not less than 100m from the first corner.

2.2.2. The Finish line should be situated so as not to allow competing cars to be driven in a straight line from the course to the paddock. Bales must protect the spectator and paddock areas where the entrance to the paddock is less than 30m from spectator enclosures.

2.2.3. The paddock and any spectator enclosures should not be less than 30m from the course where there is no barrier designed to halt a competing car travelling between these enclosures and the course. Where there is a barrier, the distance should not be less than 25m all the way round corners, and 20m alongside straights. The minimum acceptable barrier will be two rows of straw bales or equivalent, placed approximately half way between the course and the enclosures. The rows of bales must be approximately 3m apart and if each row is not continuous, any gaps must not exceed the length of a bale.

2.2.4. Any cars parked in an enclosure must be at least 10m from the front of the enclosure.

2.2.5. Any natural hazards, such as trees, ditches and fences, must not be less than 20m from the course, or, in the case of any strand or barbed wire fence, not less than 30m from the course (though where hazards on the inside of the course are protected by straw bales or the equivalent, a 10m clearance from the track is sufficient). Straw bales must not be used as course markers.

2.3. Clubcross courses must comply with 2.2.1, 2.2.2, 2.2.3, 2.2.4 and 2.2.5 and the following:

2.3.1. The maximum length must not exceed 800 metres.

2.3.2. The maximum length of any straight must not exceed 100m and all straights must be followed by a corner of at least 90°, off setting the course from its original line by at least twice the width of the course.

Organisation

2.4. The course must be defined by penalty markers placed on both sides of the track.

2.4.1. The number of penalty markers must be kept to the minimum necessary to ensure that cars keep to the course.

2.4.2. All penalty markers must be supervised by a Judge, who must be in a safe location.

2.4.3. Other markers can also be used to show the outline of the course, but the penalty markers must be at least twice the height and of a different colour to any other markers.

2.4.4. There must be an adequate supply of spare markers and sufficient Officials to ensure that any marker that is displaced is immediately reinstated.

2.5. The course must not be changed once practice has commenced, except as instructed by Stewards to improve safety.

Note: Throughout these sections an asterisk(*) indicates a requirement for additional information to be printed in the Supplementary Regulations (SRs). Text shown in Italics indicate a Regulation which may be amended in the SRs. Text shown in red indicates a new or amended regulation for 2022.

2.5.1. Any such change should be made at an appropriate time when all Competitors will have an equal number of runs on the modified course. 2.5.2. Competitors must be informed of any such change and given the opportunity to inspect and comment upon the modifications.

2.6. Only a visual communication system is mandatory.

2.6.1. At each corner of the course, there should be at least one Flag Marshal as well as one Fire Marshal with an extinguisher to cope with a petrol or electrical fire.

2.6.2. In the paddock, at least one 9kg dry powder or equivalent extinguisher, one fire resistant blanket and a pair of fire resistant gloves should be available.

2.6.3. A Small Spill Kit must be available in the paddock area.

2.7. Only red flags will be issued to Marshals for signalling purposes.

2.7.1. If a heat is stopped by a red flag, it must be re-run.

2.7.2. Any car which had not started, or which had retired from that heat, may not take part in the rerun.

2.8. The appropriate local hospital authorities must be notified of the date and time of an event, including practice.

2.9. Motorsport UK Timekeepers and Scrutineers, appropriate to the grade of the event, must be appointed.

2.10. It is strongly recommended that a breakdown vehicle capable of lifting at least two wheels of a competing car off the ground is in attendance.

2.11. Clubcross events must not be timed to less than one second.

2.11.1. Timing should be by handheld watches and the appointment of a Motorsport UK-licensed Timekeeper is recommended.

2.11.2. Clubcross cars must be scrutineered for basic safety, preferably by a Motorsport UK licensed Scrutineer.

Practice and Starts

2.12. All Competitors must be allowed three practice laps, except where they are required to walk the course before competitive runs begin (or are allowed to drive over it at non-competitive speeds) when only two practice laps will be allowed.

2.12.1. The Specific Regulations (SRs) must specify the starting signal, the method of timing and when timing commences.

2.12.2. Cars will be started in groups from a standing start with engines running.

2.12.3. The Finish line must be clearly indicated.

2.12.4. All Clubcross Competitors will be given the opportunity to walk the course prior to competing, but no practice runs will be allowed, with all runs counting towards the Competition.

Number of Starters

2.13. If the course is less than 10m wide, a maximum of two cars can be started consecutively. The second car is started when the first has a lead of not less than 200m (or one-third of a lap, whichever is the lesser). If the course is less than 10m wide but over 600m long, three cars can run consecutively so long as they are started not less than 200m apart.

2.13.1. If the course is less than 10m wide at any point but over 600m long, two cars can be started simultaneously and a second pair started when the slower car of the first pair is at least 300m from the Start line.

2.13.2. If the course is not less than 14m wide at any point and over 1200m long, two cars can be started simultaneously and a second pair started when the slower car of the first pair is at least 300m from the Start line. A third pair can be started when the slower car of the second pair is at least 200m from the Start line.

2.13.4. If the course is not less than 15m wide at any point and over 600m long, four cars may be started simultaneously.

2.13.5. The starting of cars consecutively at 200m intervals is subject to their being reasonable visibility. Where visibility may be impaired, cars should be started at greater intervals or singly, so that there is no possibility of overtaking.

2.13.6. In the interests of accurate time-keeping, and because of the difficulty of correctly lining up vehicles on a soft surface, vehicle-actuated starts are not permitted on non-metalled surfaces.

2.13.7. Only one car may run at a time in Clubcross events.

Team Relays

2.14. In Autocross relay events where cars of more than one team are on the course, all cars other than the first to start must be located in a safe position on the inside of the course with their Drivers aboard.

2.14.1. Any car finishing, except the last car of a team, must do so by crossing a special line adjacent to but outside the course proper. The car must then stop at a specified location and the Driver remain aboard until instructed by an Official to remove the car to the paddock.

2.14.2. As soon as the front wheels of a finishing car cross this special line, an Official will indicate with a green flag that the next team car can proceed. All Drivers joining the course must do so with due regard to other Competitors already on the course.

Medical and Rescue Requirements

2.15. The minimum course requirements are for one Doctor or Motorsport UK-registered paramedic (F.7.3) and one ambulance to be in attendance.

2.15.1. Ambulances should be equipped with basic resuscitation equipment and, if possible, a Casualty Immobiliser for handling patients over difficult terrain. This essential equipment should not have to be taken from any rescue vehicles which must remain at all times fully operational on the course. The ambulances must only be used in connection with casualties arising from the Competition.

2.15.2. The Organisers, in conjunction with the Chief Medical Officer, must ensure that during both practice sessions and Competition, adequate first-aid staff are in attendance (eg St John's or St Andrew Ambulance, Red Cross etc).

2.15.3. Clerks of the Course must have under their control either a licensed rescue vehicle or at least one emergency vehicle equipped with the following:

- Bolt cutters
- Pipe cutters capable of severing chassis tubes
- Tin snips
- Hacksaws complete with a quantity of blades
- Pad saw complete with a quantity of blades
- Spanners
- Fire resistant blanket
- Industrial gloves.

Awards

2.16. The maximum value of awards or benefits accrued to any Competitor in an event must not exceed the following:

2.16.1. Clubman and Interclub: £250

2.16.2. National and International: No limit.

Off-Road Racing

2.17. Off-Road Racing, which includes Minicross, Cross Car (2.17.7.) and similar events, can only take place on a circuit complying with Motorsport UK regulations.

2.17.1. The maximum number of vehicles that can start a race is limited to 12.

2.17.2. Events must comply with the provision for Rallycross, particularly in relation to medical requirements.

2.17.3. Vehicle regulations must be laid down by the organising Clubs and approved by Motorsport UK.

2.17.4. Competitors must comply with Sections H and S, and with the Regulations issued for the event.

2.17.5. Vehicles must remain in the paddock when not competing. They must not be driven in the paddock, or at any other time off the track, at a speed in excess of 5mph. They must not be driven into the spectators' enclosure at any time, without the express permission of the Clerk of the Course.

2.17.6. For venues authorised by the issued Track licence (Rallycross) to include Joker Laps, the Joker Lap may be used. Two Judges of Fact to be appointed to oversee its use, 5.1.4.1., 5.1.4.2. and 5.1.5. apply.

2.17.7. Cross Car (XC) and Cross Car Junior (XC Jnr.) are rear engine 4 wheeled (2 wheel rear drive) single seater vehicles with a multitubular space frame chassis which must have a safety cage as an integral part of the chassis. Motorsport UK have adopted the FIA technical regulation guidelines and these are available upon request.

(i) XC – Cross Car. A Competitor may participate from their 16th birthday. The minimum vehicle weight will be 400kg with a recommended vehicle power of 130hp.

(ii) XC Jnr. – Cross Car. A category reserved for drivers having reached the year of their 14th birthday and who may continue until 31st December of the year of their 16th birthday. The vehicle power will be no greater than 75hp with a minimum vehicle weight of 385kg.

Competitor's Regulations

Autocross and Clubcross Events

3.1. *Cars must be presented for scrutineering and practice at the times specified in the SRs, with any previous Scrutineering tickets removed.

3.1.1. Classes must be specified in the SRs.

3.1.2. Any Competitor not reporting as instructed may be fined, disqualified or may forfeit any claim to a favourable starting position.

3.1.3. Car being used must comply as follows:

- In Autocross with Technical Regulations 4.1 to 4.19
- In Clubcross with the whole of 4.20
- In Junior Autocross with 4.1 to 4.8 and 4.21.

Signing On

3.2. When signing on, a Competition Licence valid for the event must be produced (see Table in Section H).

3.2.1. Competitors must declare on their entry forms whether or not they have ever held a valid RTA licence.

3.2.2. Competitors aged 16 and above who have never held a valid RTA Licence must produce proof of having competed as a Driver in three Minicross or Clubcross events, or three other Motorsport UK-Permitted events (such as Kart Racing, Autotests, Production Car Trials, etc), or show proof of having completed an approved driving course at a Race or Rally School recognised by Motorsport UK.

3.2.3. Competitors having reached the year of their 14th birthday and above can compete in Minicross (grid size to be a maximum of four cars) and Clubcross. In the case of Minicross, new Competitors will have to drive observed laps prior to practice. In the case of Clubcross they must drive observed laps prior to the Competition in order to satisfy the Clerk of the Course that they are competent to take part. Observed laps are not required if the Competitor can provide the Clerk of the Course with proof of having competed as a Driver in three other Motorsport UK-Permitted events.

3.2.4. Competitors having reached the year of their 14th birthday and above may compete in Junior Autocross, and may continue until the end of the year of their 17th birthday.

3.2.4.1. Grid size to be a maximum of four cars. and may not include any Class other than Juniors.

3.2.4.2. New Competitors will have to drive observed laps prior to the Competition in order to satisfy the Clerk of the Course that they are competent to take part, subject to the following:

(i) Cars will start singly and run over three laps.

(ii) No passengers are permitted in the vehicle.

(iii) Observed laps are not required if the Competitor can provide the Clerk of the Course with proof of having competed as a Driver in three other Motorsport UK Permitted events.

Licence Upgrading Criteria

3.3. Autocross: See Table in H.

Scrutineering

3.4. No car may be driven in the event until it has been approved by a Motorsport UK Scrutineer at the meeting.

3.4.1. If after approval any car is dismantled or modified, or is involved in an accident, in a way which may affect its safety or eligibility, or any aerodynamic device is added or removed, it must be represented for approval. The Entrant is responsible for seeking fresh approval.

3.4.2. Any car involved in an incident from which it is unable to proceed must not be touched by anybody other than Officials without the specific approval of the Clerk of the Course. The Driver concerned may not drive again without the approval of the Medical Officer in Charge.

Drivers

3.5. The following items must be produced by Drivers for inspection and approval at Scrutineering and be worn throughout the Competition, properly fastened and positioned:

3.5.1. A crash helmet meeting all current regulations, which fits properly, is in a serviceable condition and bears a MSA/Motorsport UK approval sticker (see K.10.1 to 10.3.1).

3.5.2. Goggles or visor of splinter proof material (unless in a closed car with a full-size windscreen).

3.5.3. Flame-resistant overalls covering arms, legs and torso up to the neck. The use of a flame resistant balaclava, socks, shoes and underwear is strongly recommended (K.9.1 to 9.3).

3.5.4. Complete gloves (not mitts or gloves with open backs). The use of flame-resistant gloves is strongly recommended.

3.5.5. An FIA approved FHR device, fitted in accordance with FIA regulations, is recommended.

3.6. Any Driver who has not previously competed over the course within the preceding four weeks must complete at least one observed practice lap in the car to be raced. Only the Driver may be in a car during the Competition or practice.

3.6.1. In Autocross and Clubcross events, the same car may compete for the same award, however it must be driven by different Drivers.

3.6.2. Cars will be identified by Competition Numbers allocated by the Organisers, and displayed as specified in the Technical Regulations (J.4). The colour may be varied for different categories.

Results – Autocross

3.7. To be classified as a finisher in a Competition, a Competitor must complete at least one timed run.

3.7.1. Each Driver will be given two runs in the same car in each Class entered, the faster run to count unless the SRs specify otherwise.

3.7.2. The Competitor who completes the course fastest will be judged the winner.

3.7.3. Only an equal number of runs for all Competitors in the same Class will be counted. In the event of a tie between two or more Competitors, the results of the next fastest run recorded by the Competitors concerned will be compared, and so on.

3.7.4. If through their own error Drivers fail to record a time, they are not entitled to a re-run.

3.7.5. In other circumstances (eg baulking) a re-run may be granted by the Clerk of the Course who may order that any penalties incurred in the initial run are applied to the re-run.

3.7.6. A Competitor's time will be valid only if:

(a) All four wheels of the car are on the course when it crosses the Finish line

(b) The run is made in the correct period for the appropriate Class and no more than the appropriate number of timed runs has been made

(c) The Competitor has correctly complied with any starting signal

(d) The vehicle completes the correct course without outside assistance.

3.7.7. Where the boundaries of a course are defined by penalty markers (see 2.4), the following penalties will apply:

(a) If a car strikes a penalty marker, five seconds is added to the car's time for each marker touched

(b) If all four wheels of a car cross a straight line between any two markers, no time is recorded, and in addition the car must stop and not proceed until instructed to do so by an Official. Failure to stop may be deemed as driving in a manner incompatible with general safety (a breach of C.1.1.5).

Results – Clubcross

3.8. Competitors will be given the opportunity of a minimum of two runs, the aggregate time of which will count for the results.

3.8.1. If more than two runs are permitted, the worst time will be ignored and the aggregate of the remaining runs will count for the results.

3.8.2. The maximum number of runs must not exceed six.

3.8.3. All Competitors must have the opportunity to complete the same number of runs to count towards the results.

Technical Regulations

Autocross and Clubcross Vehicles

4.1. Racing Cars are prohibited.

Body

4.2. If one bumper is removed, then both must be, along with all supports.

4.2.1. Reinforcing the front apron is not permitted.

4.2.2. Any undertray must be provided with drainage holes to prevent accumulation of liquids.

Wheels

4.3. At the start of each heat or race, cars must be fitted with mudflaps behind all four wheels extending to a minimum of 3.8cm either side of the tyre tread and to a maximum of 7.6cm above the ground.

4.3.1. All nuts securing roadwheels (except centre-lock types) must be made of steel and in thread contact over a minimum length of 1½in bolt/stud diameters.

4.3.2. Extended or composite wheel bolts/studs are prohibited.

4.3.3. The use of safety wheel nuts, to prevent wheels pulling over standard nuts, is strongly recommended.

Oil Systems

4.4. Any oil tank located outside the chassis or main structure of a vehicle must be covered with a protective coating (eg GRP).

Fuel Systems

4.5. These should be equipped with an effective method of stopping fuel supply which can be operated by the Driver when seated normally with seat belt secured.

Electrical Systems

4.6. Vehicles should be equipped with an ignition cut-off switch, having a clearly marked and positive ON–OFF position, which can be operated by the Driver when normally seated with seat belt secured. It must also isolate electric fuel pumps.

4.6.1. Any forward-facing lamps of more than 32 sq cm surface area must be adequately protected against glass breakage.

Safety

4.7. Closed cars must have a means of access on either side of the Passenger compartment which can be operated from inside or outside. Access must be sufficient to remove an occupant without interference from any door locking devices.

4.7.1. They must have an operating windscreen wiper and washer system.

4.7.2. The following parts of Section J remain unmodified: Chassis, Seating, Suspension, Steering, Cooling, Weight/Ballast, Exhausts, Protecting Bulkheads.

Miscellaneous

4.8. Cars must be fitted with at least one mirror of minimum surface area 50 sq cm securely mounted to give a clear view to the rear. The edges of the mirror must be protected by a suitable cover to help prevent injury in event of an accident.

4.8.1. Where advertising is allowed on windscreens, this must not obscure the Driver's vision nor reduce the minimum unobstructed vertical height to less than 25cm.

4.8.2. Vehicles must be presented at Scrutineering with all steering mechanisms, suspension linkages and flexible brake lines in a clean condition.

4.8.3. Four-wheel steering is permitted unless SRs state to the contrary.

Autocross Vehicles

4.9. Categories and Classes are free but must be stated in the SRs. The following Classes are recommended and where used must comply with 4.9.1 to 4.9.4 and 4.10 to 4.19. Capacity splits must be specified in the SRs.

A Economy – "standard" production saloon cars

B Rally cars

C All other cars based on production vehicles

D Specials and all four-wheel drive vehicles.

4.9.1. Cars which have never been homologated, but which comply with R.46.2 and R.46.3, are eligible for Class B.

4.9.2. Except for Classes A and B, modifications are free within Vehicle Regulations.

4.9.3. Class A cars must comply with the following requirements:

(a) The complete body shell, doors, boot or tailgate must be in production material, with no modification or lightening. Windscreens must comply with 4.10.

(b) No torque biasing, locked differentials or traction control devices are Permitted.

(c) Interior trim and lights may be removed but standard dashboards must be retained. Additional instruments may be fitted.

(d) All seats, apart from the Driver's, may be removed, but the specification of the Driver's seat may be changed.

(e) Wheel sizes are free.

(f) Wheel spacers are not permitted.

(g) Suspension operation must be as manufacturer's specification.

(h) No four-wheel drive system is permitted.

(i) The engine block (which may be bored out) must be standard for the model of car, with standard inlet and exhaust manifold. There can be a maximum of two chokes, unless the car is fitted as standard with more than two chokes. Fuel injection is Permitted if standard on the model.

(j) A roll-over bar or roll cage may be fitted.

(k) The manufacturer's original gearbox and axle, with all internals as originally supplied for that model of car, must be retained and in their original positions.

(l) Cars need not be taxed or insured.

4.9.4. Class B. Road Rally Cars must be taxed and comply with R.18 to 18.6.4. Stage Rally Cars must comply with R.46.2, R.46.3 and R.47.1.1 Stage cars need not be taxed but for either a Road or Stage Rally Car, a current MoT, where appropriate, must be produced if applicable. Any forward-facing lights must comply with 4.6.1. Tyres must comply with 4.1.4.

Body (including Aerodynamics)

4.10. Cars must be fitted with a laminated glass or polycarbonate windscreen, or have a 2.5cm matrix wire mesh fitted over the whole of the windscreen aperture. If fitted with a glass or polycarbonate windscreen, the vehicle must have an operative wiper/washer system. Where windscreens are removed, rear windows must also be removed. For open vehicles, approved goggles/visors must be worn at all times.

4.10.1. If fitted with non-standard or lightened doors, cars must have an internal horizontal safety bar across each door aperture below the line of the window and at a suitable height to protect the Driver. This must not be integral with the door.

4.10.2. Any cover over the Passenger's compartment alongside the Driver must be made of foldable material, except where the Driver/Passenger compartment is separated by a stress-bearing solid chassis member as part of the original design.

4.10.3. With the exception of cars in Class D, any vehicle's silhouette viewed in side elevation must remain unaltered above the wheel hub centres of the original car, except for the engine bonnet/cover the shape of which can be altered.

4.10.4. In Class C the following are permitted to reduce weight:

(a) One-piece lightweight bonnet wing assemblies, providing adequate bracing is provided to replace lost strength

(b) Lightweight engine bonnet covers, boot lids and doors

(c) All non-stress-bearing internal components may be removed.

4.10.5. Cars more extensively lightened than indicated above must be fitted with full roll-over bars to requirements K.1.6.1 to 1.6.2.

Engine

4.11. See J.5.4.

Brakes

4.12. Brakes must comply with Statutory Requirements as to the Construction of Motor Vehicles.

4.12.1. If there is no mechanical system available for braking on at least two wheels, two hydraulic systems are required so that in event of failure of one, braking can be maintained on at least two wheels.

4.12.2. Vehicles constructed after 1930 must have brakes on all wheels.

4.12.3. When tested immediately prior to an event, the braking system on all vehicles must work without impairing the Driver's control.

4.12.4. It must be possible under all conditions, running or stationary, for 25% minimum braking effort to be applied by the Driver through the braking system to each axle.

4.12.5. Brake balance adjusters must not be available for adjustment during running if they contravene (iii).

Wheels

4.13. Any spare wheel must be securely fastened in position (a spare need not be carried unless specified in SRs).

Tyres

4.14. Only tyres for use on the public highway by cars or light commercial vehicles are permitted. Slicks or any tyres that have been wholly or partly hand-cut are not allowed unless the SRs state otherwise.

Transmission

4.15. If fitted with front wheel drive, vehicles must have an effective differential action between the driving wheels. Reverse gear is optional in Autocross Specials (Class D).

Oil Systems

4.16. In rear-engined vehicle, no part of the oil tank may be located to the rear of the gearbox casing.

Electrical Systems

4.17. It is permitted to remove all lamps. Cars in classes C & D, and all other cars where the standard rear lights are removed or not functional, must be equipped with two rear red warning lights with a minimum of 21W (or LED equivalent) each and an illuminated area of 60 sq cm. These must work with or replace the car brake light system at all times, must be between 60cm and 150cm above the ground and must be clearly visible from behind. The fitting of generators is optional

Silencing

4.18. Vehicles must comply with silencing levels in J.5.17.

Safety

4.19. Safety Criteria, K.2.1.1 point and K.3.1.2 (not necessarily plumbed in) are mandatory. K.1.6.1 to 1.6.2, K.2.1.2 and K.8 are strongly recommended.

Clubcross Vehicles

4.20. Only the following categories of vehicle are allowed to compete in Clubcross events. They must comply with the following:

4.20.1. Category 'A' Economy "Standard" Production Saloons. Cars must comply with 4.9.3 and the following: Maximum engine capacity: 2000cc, forced Induction is prohibited, four Wheel Drive is prohibited, tyres must comply with 4.20.5.

4.20.2. Category 'B' Road Saloon Cars. Maximum engine capacity: 2000cc, forced Induction is prohibited, four Wheel Drive is prohibited, tyres must comply with 4.20.5.

4.20.3. Category 'C' Minicross Cars. Cars must comply with Minicross Regulations, tyres must comply with 4.20.5.

4.20.4. Category 'D' Stock Hatch Cars. Cars must comply with Stock Rallycross Hatch Rallycross Regulations Maximum engine capacity 1600cc, Tyres must comply with 4.20.5.

4.20.5. Only highway pattern tyres are permitted (ie not off-road, on/off-road or winter pattern).

Junior Autocross Vehicle

4.21. The only category of vehicle permitted in Junior Autocross events are those complying with the following:

4.21.1. The engine must be naturally aspirated and must not have a capacity exceeding 1400cc.

4.21.2. Be production vehicles, front or rear wheel drive with standard unmodified engine in original position.

4.21.3. Must run induction systems, inlet manifolds and exhaust systems which are standard to the vehicle.

4.21.4. Performance air filters and exhaust back boxes are permitted, but turbochargers or superchargers are not.

4.21.5. The dashboard is to remain as standard and in the original position, additional instruments may be fitted. All other interior trim may be removed. The drivers seat must be a Competition Seat compatible with the requirements of 4.21.11.

4.21.6. Wheels are free.

4.21.7. Suspension is free but must use standard pick up points and locations.

4.21.8. Standard gearbox and differential applicable to the vehicle must be used.

4.21.9. Modification or relocation of the petrol tank is free.

4.21.10. The silhouette of the vehicle must not be altered.

4.21.11. Seat belts fitted in accordance with K.2.1.2. Four point (currently FIA homologated and with four separate fixing points) as a minimum are mandatory.

4.21.12. Must have no body kits, space framing or alterations, fibreglass or alloy panels to make the car lighter.

4.21.13. The windscreen may be of either laminated glass or plastic of the required thickness. No apertures will be permitted in windscreens. If fitted with a glass or plastic windscreen (J5.20.8.), the vehicle must have an operative wiper/washer system. It is permitted to replace all other windows with plastic of the required thickness.

4.21.14. K.1.6.1, K Appendix 2, drawing number 5 or 6 mandatory.

Rallycross Events

Organisers' Regulations

Permits for Rallycross

5.1. Permits for Rallycross events are issued at the sole discretion of Motorsport UK. Venues must have a valid Track Licence for Rallycross.

5.1.1. A Club will only be allowed to organise events of up to Interclub status, unless Motorsport UK has specifically approved an application for higher status.

5.1.2. Deleted.

5.1.3. The Clerk of the Course for a Rallycross event must hold a valid Motorsport UK Licence.

5.1.4. For Interclub and above status Permitted Events only, for venues authorised by the issued Track licence to include Joker Laps, the Joker Lap may be used. Two Judges of Fact to be appointed to oversee its use.

5.1.4.1. In each qualifying heat and final, one of the laps must be the Joker Lap (5.1.5.2).

5.1.4.2. Deleted.

5.1.5. Joker lap

Characteristics:

Length: must be such that the time needed to cover a lap is at least 2 seconds longer than the best lap time achieved by a Super Car.

Width: minimum 10 m, maximum 12 m.

The entry and the exit cannot be on the racing line.

Safety protection, to separate the two roads, must be in place. At the exit it must be possible for the cars to be driving at the same speed as on the traditional circuit.

A marshal post will be put in place if judged necessary for safety reasons.

5.1.5.1. The driver must enter or leave the Joker Lap section in such a way that does not constitute a danger or hinder other drivers. At the exit of the Joker Lap section, the cars on the main track have priority.

5.1.5.2. Those drivers who do not take the Joker Lap:

(i) In a Heat will receive a time penalty of 30 seconds. The penalty for drivers who take it more than once will be decided by the Clerk of the Course.

(ii) In a Final, or who take it more than once, will be classified last in that Final before the non-starters. If this concerns more than one driver, they will be classified in the order of their respective positions on the starting grid before the non-starters.

5.1.6. Track regulations as detailed in Q.12.17 to Q12.23, as appropriate, apply to Rallycross and Off Road Racing in addition to the following specific elements in respect of Rallycross tracks:

(i) The white lines, tyre stacks, marker poles or other devices identified by the Clerk of the Course during the briefing defining the track edges are considered to be part of the track.

(ii) The Clerk of the Course will identify, during the Drivers Briefing and in written form, the specific areas to be judged.

(iii) A driver will be judged to have left the track if two wheels of the car go beyond the outer edge of any kerb, the white line or track markers or should the car pass behind or substantially move any physical marker where there is no kerb.

(iv) Pushing or other contact resulting in a lasting advantage is strictly prohibited.

Practice and Starts

5.2. All Competitors must be allowed three practice laps.

5.2.1. The SRs must specify: the starting signal; the timing method; when timing commences; and the method of allocating starting positions.

5.2.2. Cars will be started from a standing start, with the engines running, and the Finish line must be clearly indicated.

5.2.3. Spinning the wheels before the start of a race is only permitted in the designated area and as defined in the SRs.

Flag Signals

5.3. Flag signals in accordance with Q.12.24.3(a), (e), (f), (g), (h), (j), (l), (m) and (n) may be used as appropriate, with the same meanings and restrictions as in Racing.

5.3.1. A Yellow flag gives warning of an incident and prohibits overtaking until the incident is passed.

5.3.2. Any race can be stopped at the sole discretion of the Clerk of the Course by waving the Red flag at the Start/Finish line. Competitors will be warned that the race has been stopped by the simultaneous waving of the Red flag at all Flag Marshalling Posts.

5.3.2.1. Re-runs will only be permitted at the discretion of the Clerk of the Course and:

(a) When a red flag has been shown during a Heat or Final and/or

(b) when the end-of-race signal is displayed inadvertently or otherwise before the leading car completes the scheduled number of laps.

5.3.2.2. Only the participants in the first start are entitled to participate in the re-run and must occupy the same place as for the previous start. In this case, any possible warnings or penalties will however, apply for the re-run.

5.3.2.3. Where a driver in a Heat or Final causes a re-run, the driver concerned may be disqualified from the results.

5.3.2.4. All other incidents will be treated as "force majeure".

5.3.2.5. If a Heat or Final is stopped by a Red flag and subsequently restarted, any driver who started in the original Heat or Final, but who is not able to start in the re-run, will be classified in front of any drivers who did not start at all.

5.3.2.6. If not restarted the result will be based on the order of crossing the finish line at one lap less than at the time of the first showing of the Red Flag.

5.3.2.7. No work may be carried out on the grid unless on grounds of safety and only with the approval of the scrutineer.

5.3.2.7.1. The Clerk of the Course may order that the duration of the second part or re-run of any race shall be of a shorter distance than originally scheduled, or may be abandoned altogether.

5.3.2.8. If no cars are running under their own power, the Clerk of the Course may order the end of race signal to be displayed. The results will be declared on the relative positions of cars at the time they last crossed the finish line under their own power.

5.3.2.8.1. Any race stopped before the leader has completed one lap will be declared a "No Contest" and available cars will restart from their original grid positions.

Medical and Rescue Requirements

5.4. The minimum course requirements (including at practice) are as follows:

5.4.1. Rallycross: one Doctor or Motorsport UK-registered Paramedic (F.7.3.1), one ambulance and one licensed Rescue Unit crewed in accordance with F.2.5.

5.4.2. Minicross: one Doctor or Motorsport UK-licensed paramedic, one ambulance and either one licensed Rescue Unit with licensed crew, or one emergency vehicle equipped as in 30.

5.4.3. Where Minicross is organised within a Rallycross meeting, the medical and rescue requirements stipulated for Rallycross also apply to the Minicross event within that meeting.

5.4.4. Ambulances should be equipped with basic resuscitation equipment and, if possible, a Casualty Immobiliser for handling patients over difficult terrain. This essential equipment should not have to be taken from any rescue vehicles which must remain at all times fully operational on the course. The ambulances must only be used in connection with casualties arising from the Competition.

5.4.5. The Organisers, in conjunction with the Chief Medical Officer, must ensure that during both practice sessions and Competition adequate first aid staff are in attendance (eg St John or St Andrew Ambulance, Red Cross etc).

Competitor's Regulations

Signing On

5.5. When signing on, a Competition Licence valid for the event must be produced (see Table in Section H).

5.5.1. Competitors must declare on their entry forms whether or not they have ever held a valid RTA licence.

5.5.2. Competitors aged 16 and above who have never held a valid RTA Licence must produce proof of having competed as a Driver in three Minicross or Clubcross events, or three other Motorsport UK-Permitted events (such as Kart Racing, Autotests, Production Car Trials, etc), or show proof of having completed an approved driving course at a Race or Rally School recognised by Motorsport UK.

5.5.3. Competitors having reached the year of their 14th birthday may compete in Junior Rallycross, and may continue until 31st December of the year of their 17th birthday:

5.5.3.1. For Junior Rallycross maximum grid size to be as per Track Licence.

5.5.3.2. New competitors will have to drive observed laps prior to the competition in order to satisfy the Clerk of the Course that they are competent to take part. Cars will start singly and run over three laps. Observed laps are not required if the Competitor can provide the Clerk of the Course with proof of having competed as a Driver in three other Motorsport UK-Permitted events or having successfully completed an approved driving course at a Race or Rally School recognised by Motorsport UK.

5.5.4. Any driver competing in a vehicle of 0.34bhp/kg or higher (excluding driver weight) and measured at the driven wheels, must be the holder of an RS National licence, as a minimum.

Licence Upgrading Criteria

5.6. Rallycross: See H.17.1.

Scrutineering

5.7. No car may be driven in the event until it has been approved by a Motorsport UK Scrutineer at the meeting.

5.7.1. *Cars must be presented for scrutineering and practice at the times specified in the SRs, with any previous Scrutineering tickets removed. Classes must be specified in the SRs. Any Competitor not reporting as instructed may be fined, disqualified or may forfeit any claim to a favourable starting position.

5.7.2. Cars being used must comply with Technical Regulations 6.1 and 6.14.3.

5.7.3. If after approval any car is dismantled or modified, or is involved in an accident, in a way which may affect its safety or eligibility, or any aerodynamic device is added or removed, it must be represented for approval. The Entrant is responsible for seeking fresh approval.

5.7.4. Any car involved in an incident from which it is unable to proceed must not be touched by anybody other than Officials without the specific approval of the Clerk of the Course. The Driver concerned may not drive again without the approval of the Medical Officer in Charge.

Drivers

5.8. Any Driver who has not previously competed over the course within the preceding four weeks must complete at least one observed practice lap in the car to be raced. Only the Driver may be in a car during the Competition or practice.

5.8.1. Rallycross Drivers must conform to the Medical Requirements specified in H.10.

5.8.2. Cars will be identified by Competition Numbers allocated by the Organisers, and displayed as specified in the Technical Regulations J.4 or Q.11.4 or Q11.5. The colour may be varied for different categories.

5.9. The following items must be produced by Drivers for inspection and approval at Scrutineering and be worn throughout the Competition, properly fastened and positioned:

5.9.1. A crash helmet meeting all current regulations, which fits properly, is in a serviceable condition and bears an MSA/Motorsport UK approval sticker (see K.10.1 to 10.3.1).

5.9.2. Goggles or visor of splinter proof material (unless in a closed car with a full-size windscreen).

5.9.3. Flame-resistant overalls covering arms, legs and torso up to the neck. The use of a flame resistant balaclava, socks, shoes and underwear is strongly recommended (K.9.1 to 9.3).

5.9.4. Complete gloves (not mitts or gloves with open backs). The use of flame-resistant gloves is strongly recommended.

5.9.5. An FIA approved FHR device, fitted in accordance with FIA regulations, is mandatory.

5.9.6. Cars will be permitted to carry radio transmitters, or receivers where the Supplementary or Championship regulations allow, and only for the following.

(a) for National 'A' and above status Permitted Events

(b) for any Junior category only a non-transmitting radio receiver tuned to the frequency of a single transmitting device, which is under the direct and sole control of the Clerk of the Course is permitted. The system is to be used solely for providing competitors with instructions or warnings issued by the Clerk of the Course.

Where required Ofcom licences must be in place:

Results

5.10. *The SRs will specify the method by which a winner is decided.

5.11. Judges may be appointed to adjudicate on:

5.11.1. False starts.

5.11.2. Not following correct course, or touching a marker.

5.11.3. Baulking or contact.

5.11.4. Noise.

Technical Regulations

Rallycross Vehicles

6.1. Racing Cars are prohibited.

6.1.1. Vehicles will be classified as detailed in the SRs. They must be of rigid construction and comply with the regulations below. They must have been homologated in Group N, A or B of FIA Appendix J or in groups 1, 2, 3 or 4 of 1981 FIA Appendix J (although homologation may have lapsed) or commercial vehicles specifically approved by Motorsport UK.

6.1.2. Cars complying with current FIA Appendix J Article 279 regulations, in their entirety, are also permitted, even where homologation may have lapsed.

6.1.3. *Mass-produced non-homologated vehicles may be accepted for events up to National level.

6.1.4. Rallycross vehicles in compliance with 8 and issued the Rallycross Space Frame Vehicle Identity Form (RXVIF). The vehicle may not be used in competition until the Vehicle Identity Form has been validated by Motorsport UK and returned to the vehicle owner.

6.1.5. Rallycross vehicles of mixed construction, being part Spaceframe, part Unitary Construction or other, issued with a Competition Car Log Book/Vehicle Passport prior to 31st December 2016, and complying with specific regulations approved by Motorsport UK.

6.1.6. Rallycross spaceframe vehicles, issued with a Competition Car Log Book/Vehicle Passport prior to 31st December 2016, complying with Championship Technical Regulations approved by Motorsport UK (6.13.2 applies).

6.1.7. Rallycross electric vehicles specifically approved by Motorsport UK. Additional safety training and requirements will be an integral element of the application and approval.

Body (including Aerodynamics)

6.2. The vehicle must have a bulkhead separating the cockpit from the engine compartment. It must retain its original material and location compared to the standard car. Installing components up against or passing through this bulkhead is permitted, providing nothing protrudes into the cockpit more than 20cm (as measured perpendicularly to the bulkhead). This will be measured at the point of intrusion, and parallel to the ground. If the protrusion includes the engine, the cam/valve cover may not extend further back than the forward most point of the windscreen aperture when viewed directly from above. For Scrutineering purposes, a 13mm diameter hole must be drilled at the forward most point of the screen aperture.

6.2.1. Bumpers and supports, if fitted, must both be as originally fitted to the mass-produced vehicle. No reinforcing of bumpers or supports is permitted. If one bumper is removed, then both must be, along with all supports.

6.2.2. Reinforcing the front apron is not permitted.

6.2.3. Any undertray must be provided with drainage holes to prevent accumulation of liquids.

6.2.4. The windscreen must be of either laminated glass or polycarbonate of the required thickness. No apertures will be permitted in windscreens. If fitted with a glass or polycarbonate windscreen, the vehicle must have an operative wiper/washer system. All Drivers must wear approved goggles or visors, unless the car is fitted with a polycarbonate windscreen. A wire mesh stone guard adequately fitted to the bodywork and with a minimum matrix of 1in is permitted with any type of windscreen.

6.2.5. When viewed from above, wheels must be covered by rigid material at all times. The outside shape of the original coachwork must be retained, except around the wings.

6.2.6. Openings may be made in the bonnet or boot lid for ventilation, providing they do not make mechanical components visible.

6.2.7. The Bodywork must be of the vehicle manufacturers specifications and minimum thickness with the exception of airboxes, radiators, front wings, rear wings/rear quarter panels and removable parts and panels, which may be of alternative materials. Seam welding, and localised gussets/reinforcement is permitted.

Engine

6.3. The engine may be modified, but the block must be from a mass-produced engine and must have the same number of cylinders as the original mass produced engine for that car.

6.3.1. Specialist Competition Engines, as defined in Nomenclature and Definitions, are also permitted.

6.3.2. The engine must be located within the original engine compartment.

6.3.3. Twin engine configurations are not permitted unless mass produced in that form.

Oil Systems

6.4. Oil systems must have catch tanks fitted.

6.4.1. Any oil tank located outside the chassis or main structure of a vehicle must be covered with a protective coating (eg GRP).

Fuel Systems

6.5. These should be equipped with an effective method of stopping fuel supply which can be operated by the Driver when seated normally with seat belt secured.

Transmission

6.6. Transmissions can be modified.

6.6.1. The clutch and its control are free, but automatic operation of the clutch is prohibited, unless fitted by the manufacturer to that body style. The clutch must be operated by the Driver's feet, unless an alternative method of operation is fitted by the manufacturer to that body style. Modification for disabled drivers permitted in accordance with J.5.1.1.

6.6.2. Deleted.

6.6.3. The final drive assembly, differentials, propshafts and driveshafts are free. Electronically-controlled systems are prohibited.

6.6.4. *The SRs may require four-wheel drive vehicles to be subject to some form of handicap (not necessarily a delayed start).

Electrical Systems

6.7. Vehicles should be equipped with an ignition cut-off switch, having a clearly marked and positive ON–OFF position, which can be operated by the Driver when normally seated with seat belt secured. It must also isolate electric fuel pumps.

6.7.1. Any forward-facing lamps of more than 32 sq cm surface area must be adequately protected against glass breakage.

6.7.2. All lights may be removed, but all cars must be equipped with two rear red warning lights to be used in fog, with a minimum of 15W each and an illuminated area of 60 sq cm. These must work with or replace the car brake light system at all times, must be between 115cm and 150cm above the ground and must be clearly visible from behind.

6.7.3. Generators are optional but a self-starter system must be operable at all times.

Brakes

6.8. Brakes may be modified, but an effective handbrake is obligatory. The handbrake may be modified for fly-off operation.

6.8.1. There must be at least two hydraulic systems so that if one fails, braking is maintained on at least two wheels (not on the same side).

6.8.2. The braking system on all vehicles must work without impairing the Driver's control when tested immediately prior to an event. It must be possible under all conditions, running or stationary, for 25% minimum braking effort to be applied by the Driver through the braking system to each axle.

6.8.3. Brake balance adjusters must not be capable of adjustment during running if they contravene 6.8.2.

6.8.4. Anti-lock devices are prohibited but brake discs are free, subject to being made of ferrous material.

Wheels

6.9. At the start of each heat or race, cars must be fitted with mudflaps behind all four wheels extending to a minimum of 3.8cm either side of the tyre tread and to a maximum of 7.6cm above the ground.

6.9.1. All nuts securing roadwheels (except centre-lock types) must be made of steel and in thread contact over a minimum length of 1½in bolt/stud diameters.

6.9.2. Extended or composite wheel bolts/studs are prohibited. The use of safety wheel nuts, to prevent wheels pulling over standard nuts, is strongly recommended.

6.9.3. Maximum wheel width on all cars is 25cm (wheel width = flange + rim + tyre).

Silencing

6.10. Vehicles must comply with silencing levels in J.5.17.

Safety

6.11. Closed cars must have a means of access on either side of the Passenger compartment which can be operated from inside or outside. Access must be sufficient to remove an occupant without interference from any door locking devices. They must have an operating windscreen wiper and washer system.

6.12. Vehicles must comply with safety criteria in:

6.12.1. K.1.6.1, K Appendix 2, drawings number 5, 6 or 8, with door bars as shown in drawing 9 mandatory.

6.12.1.1. With the exception of Lotus Elise/Exige derivatives and Vauxhall VX220 the door bars on the driver's side must be in accordance with Section K Appendix 2 drawing number 12(g), 12(h) or 12(j).

6.12.2. Harness: K2.1.3 as a minimum.

6.12.3. Fire extinguisher: K3.1 or K3.2 minimum.

6.12.4. K.5.1 to 5.2.

6.12.5. K.8.

6.12.6. K.13.

Miscellaneous

6.13. The following parts of Section J remain unmodified: Chassis, Suspension, Steering, Cooling, Weight/Ballast, Exhausts.

6.13.1. Active suspension, and any system which allows control of the spring flexibility, shock absorption or trim height when the car is moving, is prohibited unless fitted by the manufacturer to that body style.

6.13.2. MSA/Motorsport UK or FIA Competition Car Log Books/Vehicle Passports are required at all Rallycross events. Any MSA/Motorsport UK Competition Car Log Book issued prior to 31st December 2016 will become invalid on 1st January 2022. All vehicles will need to obtain a new Vehicle Passport valid for the 2022 season.

6.13.3. Cars must be fitted with at least one mirror of minimum surface area 50sq cm securely mounted to give a clear view to the rear. The edges of the mirror must be protected by a suitable cover to help prevent injury in event of an accident.

6.13.4. Where advertising is allowed on windscreens, this must not obscure the Driver's vision nor reduce the minimum unobstructed vertical height to less than 25cm.

6.13.5. Vehicles must be presented at Scrutineering with all steering mechanisms, suspension linkages and flexible brake lines in a clean condition.

6.13.5.1. Four-wheel steering is permitted unless SRs state to the contrary.

6.13.6. Seats. Be fitted with a driver's seat FIA Homologated, and mounted in accordance with K.2.2.

6.13.6.1. For national events, FIA homologated seats manufactured to FIA Standard 8855-1999 may be used for up to two years beyond the expiration of the original homologation label validity. FIA homologated seats manufactured to FIA Standard 8862-2009 or 8855-2021 may be used until 31st December of the year stated on the label.

6.14. Vehicles must have:

6.14.1. Internal bonnet locks removed and external positive locking fasteners fitted.

6.14.2. Steering column locks rendered inoperative.

6.14.3. Towing eyes of adequate strength and size fitted front and rear. These should be painted a contrasting bright colour.

Junior Rallycross Vehicle

7.1. The only category of vehicle permitted in Junior Rallycross events, other than vehicles complying with the MDA Junior Minicross Regulations (as approved by Motorsport UK), are those complying with the following:

7.1.1. Be a Series Production Car, front or rear wheel drive complying with the provisions of Sections J, K and 6.1 to 6.14.

7.1.2. Be specifically authorised by Motorsport UK by issue of a Junior Rallycross Competition Car Log Book. The vehicle may not be used in competition until the Junior Rallycross Competition Car Log Book has been validated by Motorsport UK and returned to the vehicle owner.

7.1.3. The engine must be naturally aspirated and must not have a capacity exceeding 1400cc.

7.1.4. The cylinder head and block must remain as originally supplied by the Manufacturer as a Standard Part for that model.

7.1.5. Where the car is fitted as standard with an ECU then that ECU must remain fitted and as specified by the Championship Regulations.

7.1.6. The engine cooling system must remain standard to the vehicle.

7.1.7. Induction systems, inlet manifolds and exhaust systems must remain standard to the vehicle. Performance air filters and exhaust back boxes are permitted.

7.1.8. At any time Motorsport UK may impose further restrictions to limit engine performance.

7.1.9. The silhouette of the vehicle must not be altered.

7.1.10. The bodyshell must be of the vehicle manufacturers specifications and minimum thickness with the exception of rear wings/rear quarter panels and removable parts and panels, which may be of alternative materials. Seam welding, and localised gussets/reinforcement is permitted.

7.1.11. The dashboard is to remain as standard, in the original position and the standard instruments retained and operable.

7.1.12. All other interior trim must be removed including carpets, roof lining and passenger seats. Interior door panels may be replaced with an alternate non-flammable material.

7.1.13. All window glass to be replaced with polycarbonate, J.5.20.8. applies.

7.1.14. Glass sunroofs are not permitted. Sunroofs may be of a non-shattering solid rigid material other than glass. Any sunroof must be firmly secured in the closed position. The sunroof aperture may be closed by solid metallic material permanently fitted in place.

7.1.15. An interior rear view mirror must be fitted to the vehicle.

7.1.16. All vehicles must have substantial underbody protection covering any area of both the fuel tank and engine sump exposed to running damage.

7.1.17. The handbrake system is to remain as standard.

7.1.18. Mud flaps are to be fitted behind all 4 wheels, in accordance with R.48.1.12.

7.1.19. Wheels must be of the standard production size and material applicable to the vehicle.

7.1.20. The steering column is to remain as standard (6.14.2. applies). The steering wheel and mounting hub are free.

7.1.21. Standard production gearbox and differential applicable to the vehicle must be used.

7.1.22. The original method of suspension operation must be retained and utilise the mounting points as provided by the manufacturer. Shock absorbers and coil springs may be uprated and adjustable.

Safety

7.1.23. In addition to the requirements of Section K and 6.11 to 6.12:

7.1.23.1. Double longitudinal door bars must be fitted to the drivers side of the roll cage in accordance with Section K Appendix 2 Drawing No 12(g), 12(h) or 12(j).

7.1.23.2. Fire Extinguisher: K3.1 minimum.

7.1.23.3. Deleted.

Rallycross Spaceframe Technical Regulations

These regulations are mandatory for all space frame vehicles from 1st January 2021.

All vehicles must comply with Section J, Rallycross Vehicles 6.1-6.14.3 unless where specified below:

8.1. General Technical Requirements and Exceptions

8.1.1. The use of magnesium or titanium alloy is not permitted, with the exception of titanium sheets which may only be used for heat shields.

8.1.2. All Spaceframe cars must have an identification number stamped into a plate measuring 80mm x 20mm which must be welded to the centre of the underside of the main 'B' hoop.

8.2. Safety Requirements

As a minimum:

8.2.1. ROPS door bars to K Appendix 2 Drawing 12a, g or h are mandatory, on driver and passenger side.

8.2.2. Where the door bar elements of the ROPS cross, a reinforcement for the bend or junction must be fitted in all four angles. This reinforcement must be made from bent sheet metal with a U shape the thickness of which must not be less than 1.0 mm. The ends of this gusset (point E) must be situated at a distance from the top of the angle (point S) of between 2 to 4 times the outer diameter of the biggest of the tubes joined. Appendix 1, Drawing 8.6. A cut-out is permitted at the top of the angle but its radius (R) must be no greater than 1.5 times the outer diameter of the biggest of the tubes joined. The flat sides of the gusset may have a hole, the diameter of which must not be greater than the outer diameter of the biggest of the tubes joined.

8.2.3. A currently FIA homologated competition seat with appropriate mountings is mandatory in accordance with K.2.2.

8.2.4. All vehicles must be fitted with an extinguisher system plumbed-in for discharge into both the engine compartment and the cockpit (K.3.1).

8.3. Chassis and Bodywork

The vehicle must have the Silhouette of a Series Production Car of a closed type.

8.3.1. The wheelbase will be as per the Series Production Car specification with a tolerance of ±0.5%. The vehicle width of the Series Production Car must be retained with a maximum permitted increase of 100mm.

8.3.2. The minimum elements of the spaceframe are shown in Appendix 1 Drawings.

8.3.3. Drivers door must be of steel construction.

8.3.4. No element of the ROPS may pass through the space normally used for the front passenger; to allow driver extraction from either side of the car.

8.3.5. The floor frame is an integral part of the structure and the 'A' and 'B' main hoops must attach to it. The floor frame must be constructed from either minimum 50mm x 2mm square box section or minimum 50mm x 2mm diameter tube material in accordance with K1.4.1. The floor must be made of either minimum 10mm composite, 1mm steel or 2mm aluminium alloy to be fixed to the top of the floor frame as defined in Drawing No. 8.2.

8.3.5.1. The forward most part of the spaceframe must be at least 100mm behind the forward most part of the front bumper (Drawing No. 8.5).

8.3.5.2. The rear most part of the spaceframe must be at least 100mm forward the rear most part of the rear bumper (Drawing No. 8.5).

8.3.6. The roof must be of either minimum 10mm composite, 1mm steel or 2mm alloy to be fixed to the top of the upper surface to protect the driver as defined in Appendix 1, Drawing **8.3.** Main cage.

8.3.7. The bulkheads (J5.2.1) must extend across the full width of the spaceframe.

8.3.7.1. Bulkheads must be made of minimum 1mm steel and be welded to the spaceframe.

8.3.7.2. For front bulkheads 6.2 applies.

8.3.7.3. No part of the rear bulkhead must be further forward than the rearmost part of the driver's seat.

8.3.7.4. Cars with a front engine location must be constructed so that the rearmost part of the engine is at least 25mm in front of the front bulkhead.

8.3.7.5. In rear-engine cars the bulkhead must extend vertically to at least the same height as the highest part of the engine. From this point a polycarbonate window, minimum thickness 5mm may complete it, extending to the full height of the interior space as well as a horizontal cover extending to the rearmost part of the interior space (J5.2.2).

8.3.7.6. In either case the full bulkhead must completely isolate the driver from the engine compartment.

8.3.7.7. A similar bulkhead must isolate the engine and exhaust system from the fuel tank (J5.2.1).

8.3.7.8. No part of the engine may protrude through either the front or rear bulkheads (J5.2.2).

8.3.8. Power Transmission System/Flywheel Protection

8.3.8.1. The transmission tunnel frame will be fabricated from steel tubing with minimum dimensions of 25mm x 2mm (Drawing No. 8.4).

8.3.8.2. This frame to be reinforced (on the drivers' side and top of tunnel), at the rear of the gearbox and at the clutch/flywheel area, for a minimum distance of 200mm (centre lines based on the front propshaft flange and 25mm rearward from the gearbox to engine mounting face) using minimum 2.6mm steel extensively welded to the inside of the frame. Using the same centre line for 300mm minimum 1.2mm steel will be extensively welded to the outside of the tunnel. The remainder of the tunnel may be covered by minimum 1mm steel or minimum 1.5mm aluminium.

8.3.8.3. Front wheel drive, the front bulkhead must be reinforced where the flywheel and drive shafts are directly in line with the driver.

8.4. Aerodynamic Devices

8.4.1. Must not exceed the overall limits of the original bodywork dimensions (J5.2.7).

8.4.2. Must not be wider than the widest part of the car's bodywork or higher than the highest part of the roof.

8.4.3. Within these restrictions their design is free.

8.5. Body panels

8.5.1. Door hinges must be of adequate strength.

8.5.2. Body material is free subject to 8.1.1 and 8.3.3.

8.6. Engine

8.6.1. With the exception of 6.3.2, 6.3 applies.

8.6.2. Forced Induction engines must be fitted with a restrictor in compliance with FIA Appendix J, Article 279, Article 3.7.

8.7. Suspension and Steering

8.7.1. The operating method and the design of the suspension system are free.

8.7.2. Suspension parts may not be attached to the spaceframe at those elements making up the major components of the ROPS i.e. main/front hoop and main braces.

8.7.3. The springing medium must not consist solely of bolts located through flexible bushes or mountings but may be of fluid type.

8.7.4. There must be movement of the wheels to give suspension in excess of any flexibility in the attachments.

8.7.5. Chromium plating of steel suspension members is prohibited.

8.7.6. All suspension members must be made of homogeneous metallic material.

8.7.7. All vehicles must be fitted with a steering column of a collapsible type.

8.8. Fuel Tank/Fuel
In accordance with J5.13.

8.8.1. No part of the fuel tank to be located less than 300mm from the bodyshell in both lateral and longitudinal directions, and must be outside the driver's compartment, and be separated from the driver's compartment by a metal firewall or container, both of which must be flameproof and liquid-proof. The remainder of the system will be as per J5.13. K4 is recommended.

8.8.2. Fuel fillers passing through the cockpit must be isolated and fitted with non-return valves at the fuel tank.

8.9. Exhaust and Silencing

8.9.1. The orifices of the exhaust pipes must be between 100mm and 450mm above the ground.

8.9.2. Exhaust gas may only exit at the end of the exhaust system.

8.9.3. All exhaust gasses including wastegate outlet must pass through the main exhaust system.

8.9.4. No part of the chassis may be used to evacuate exhaust gases.

8.10. Weights

The weight of the car is measured with the driver on board wearing his/her full racing apparel, and with the fluids remaining at the moment at which the measurement is taken.

The minimum weight must be:

4 Wheel Drive 1300kg

2 Wheel Drive 900kg.

9. Historic Rallycross

The Motorsport UK has created the Regulations in 9 so that Historic Cars may be used for competitions under a set of rules that seek to preserve the specification of their period and prevent modifications of performance and behaviour which could arise through the application of modern technology. Historic competition is not simply another formula in which to acquire trophies, it is a discipline apart, in which one of the essential ingredients is a devotion to the cars and to their history. Historic Motor Sport enables the active celebration of the History of the Motor Car.

Historic Rallycross vehicles must comply with the regulations below and Rallycross Vehicle Technical regulations (6), with the exception of 6.3.

9.1. Cars Eligible

Must have been Homologated or be a model commercially available before 31st December 1991.

9.1.2. A validated Historic Rallycross Vehicle Identity Form (HRXVIF) must be obtained from the Motorsport UK and presented at scrutineering. This will be the definitive document for the technical specification of the vehicle for which it has been issued.

The HRXVIF will remain valid for a period of 10 years from the date of issue or such time as the registered owner of the vehicle changes if earlier.

9.1.3. Cars manufactured after the appropriate date may be Permitted, providing that documentary evidence is submitted to the Motorsport UK with the identity form to show that the specific car (not model) is of the same specification as one manufactured within the specified period. This evidence will include any technical documentation supplied by the manufacturer, documents relative to the vehicle, and any other details from reliable and authenticated sources as may be available. On receipt of satisfactory evidence the Motorsport UK will issue an Historic Rallycross Vehicle Identity Form which must be presented at scrutineering.

Permitted Modifications

9.2. Only period modifications used in Rallycross on the particular make and model of car are permitted.

9.2.1. They should be detailed on the Historic Rallycross Vehicle Identity Form and duly ratified by the Motorsport UK.

9.2.2. In all cases the onus of proving a modification as being period rests with the Competitor who must submit the required documentary evidence.

9.2.3. Exceptionally, the Motorsport UK may grant a dispensation to use non-original parts, parts from a different model, or parts from a later period, provided that the use of these parts does nor confer an advantage in either performance or reliability. The Motorsport UK will give consideration to written requests from Competitors who are unable to source vital components.

Engine

9.3. The engine is free but the block must be from a Series Production or FIA homologated engine and must have the same number of cylinders as the original engine for that model. The engine must be located within the original engine compartment. Twin engine configurations are not permitted unless homologated in that form.

9.3.1. Standard Wankel units are considered as three cylinders, twin Wankel units as six cylinders.

9.3.2. Be equipped with a positive method of throttle closing in event of linkage failure, by means of an external spring to each throttle spindle.

Appendix 1: Rallycross Spaceframe Drawings

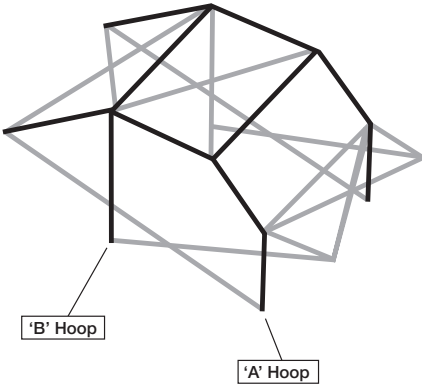

Drawing 8.1:
ROPS

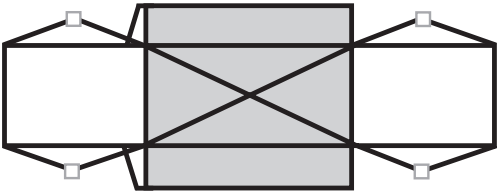

Drawing 8.2:
Floor frame

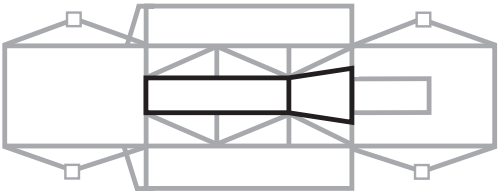

Drawing 8.4 (Pt 1):
Transmission tunnel

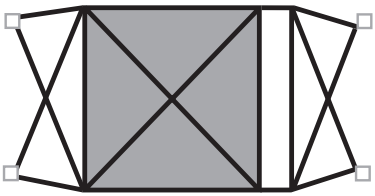

Drawing 8.3:
Plan View

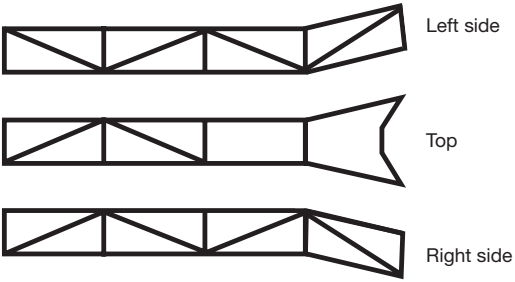

Drawing 8.4 (Pt 2):
Detail of transmission tunnel

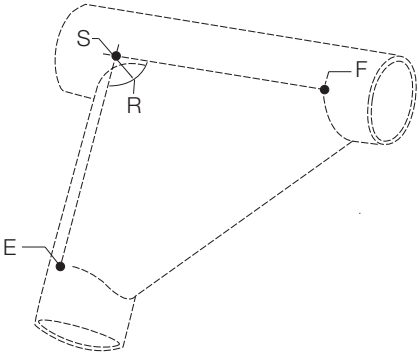

Drawing 8.6:
Gusset

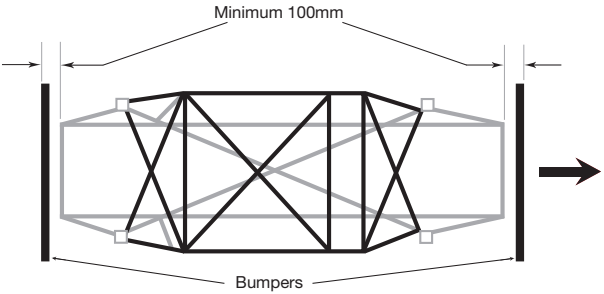

Drawing 8.5

Suspension top mount

Floor/Roof Skin

More marketing tools to consider

Throughout the Motorsport UK Yearbook we have introduced you to the basics of event marketing, shown you how to write press releases and explained how to run an advertising campaign on Facebook. But what other marketing tools could you use as part of your plan?

Influencer relations

Historically, mainstream media have been the default channel through which to reach mass audiences. However, in the age of social media, 'influencers' are becoming just as important, so you should consider influencer relations as well as media relations.

Influencers are, quite simply, people who are influential on social media. Broadly, this means they publish posts and content focusing on a particular activity or industry, and have built up a large and loyal following.

The biggest influencers are now charging eye-watering sums of money from anyone wanting to piggyback onto their success, but have a look around at some of the influencers in the motorsport and motoring worlds, and think what you can offer that might entice them – a free drive in your event, perhaps? If there are any celebrities based near your event, consider a similar approach.

Referral marketing

When looking for new people to take part in your event, in whatever capacity, why not start with those already involved? Your existing customers can be some of your best advocates. Assuming they have family and friends, at least some of whom must be like-minded, consider how you can encourage or even incentivise them to share details of your event.

Blogging

Particularly useful for pre-event marketing, blogs offer a great way to express not only your key messages but also your mission statement, i.e. why you're organising your event. Are you running your event to bring a motorsport discipline to a new part of the UK, to revive a venue, or take motorsport to audiences? Whatever the mission, express it eloquently and passionately through a blog post, and use social media to share it.

Google Analytics

Since much of your marketing activity will be geared towards driving audiences to your event webpage for more information and to sign up or buy tickets, you'll want to track how well you're doing. This is where GA comes in. Head to Google Analytics (Google it!) and set up your account. Once up and running, you will have access to a wealth of data about traffic to your website. It can look daunting at first, but the basics are actually quite easy to get your head around. Search for the Google Analytics Academy, where you will find a free beginner's guide.

Specific Regulations for Cross Country Events (P)

(P) Cross Country Events

Organisers' Regulations: Applying to All Events

1.1. A Motorsport UK Organising Permit is required for any form of Cross Country event and is issued at the sole discretion of Motorsport UK.

1.1.2. The Motorsport UK Organising Permit number, and the Competition Authorisation Office (CAO) authorisation numbers where applicable, must be included in the Final Instructions.

1.1.3. A Club will only be allowed to run events up to Interclub status, unless Motorsport UK has specifically approved an application for National or International status.

1.1.4. Every practicable precaution must be taken to avoid depositing mud or soil on the public highway when leaving private property.

1.1.5. Warning notices as required by D.31.1 to D.32.5 must be displayed.

1.1.6. Organisers should be aware of the nearest hospital and the best route there in case of incident.

1.1.7. The organisers of events on a single site must have on site at a pre-identified locations a First Aid Kit in compliance with requirements for 11-20 employees as specified in BS 8859-1:2011 (and including an eye bath).

1.1.8. No person under 14 may act as a Marshal or Assistant Marshal unless under the direct supervision of a Marshal over 18 years old.

1.1.9. Competition Licences should be signed by the Clerk of the Course, if the holders complete the event without any adverse report. Signatures may be obtained by both Driver and Navigator.

1.1.10. The use of the public forest estates managed by Natural Resources Wales, Forestry and Land Scotland, and Forestry England, must have been approved by Motorsport UK. Permission must be applied for by an annually specified date, prior to the Forestry year (which runs 1 January - 31 December). All Cross Country Events are restricted to the tyres defined as All Terrain in 56.7.4.

1.1.11. The Clerk of the Course for either a Competitive Safari or a Hill Rally of National status or above must hold a valid Motorsport UK CofC Licence. For details of retention and upgrading see Section G.22.

Official Recovery

1.2.1. With the exception of Challenge Events, Team and Winch Recovery events, all recovery operations will be under the control of the Clerk of the Course.

1.2.2. All equipment to be used by the Official Recovery Teams must be inspected prior to the start of an event, and the Clerk of the Course must be satisfied that it is in good condition and adequate for the purpose intended.

1.2.3. *All Official Recovery Teams should be sited by the Clerk of the Course, and the method used in recovering stranded Competitors must be specified in the Supplementary Regulations (SRs).

1.2.4. It is recommended that all vehicles used for Official recovery should have any front or rear windows, whether glazed or not, covered with a metal mesh, expanded metal or gauze. This is particularly important where 'snatch' recovery is to be employed.

Fire Extinguishers

1.3.1. At each section organisers should provide fire extinguishant of a minimum 9kg total capacity, in units of not less than 6kg each, suitable for extinguishing vehicle fires.

1.3.2. This extinguisher can be carried by a Section Marshal escorting Competitors around the various sections.

1.3.3. Where sections are closely grouped, one extinguisher located at a clearly visible central point is permitted.

Footpaths, Bridleways and Restricted Byways

1.4. The Organisers of any Cross Country event (competitive or recreational) crossing or using a Footpath, Bridleway or Restricted Byway, whether competitively or not, must appoint a Liaison Officer to verify the status of any track or path along the route, ensure compliance with Section 33 of The Road Traffic Act 1988 and:

1.4.1. Obtain permission from the Landowner and any occupiers and authorisation from the Highway Authority in accordance with Section 33 of The Road Traffic Act 1988 (unless the route is already a way of higher status). Any conditions laid down must be adhered to.

1.4.2. Notify the Police (clarifying the nature of the event).

1.4.3. Notify the National Parks (if appropriate) 1.4.4. Notify the Parish Council.

1.5. In particular, all locations must be adequately marshalled by Officials who are well briefed and properly identified.

1.5.1. One Official must be appointed for each section to ensure that the event does not unduly inconvenience other users, eg horse-riders, walkers, cyclists etc.

1.5.2. The Official must have a good working knowledge of the Rights of Way affecting the Competition.

1.5.3. Alternative routes for other users of the Rights of Way must be signposted. Warning Notices (D.31.1.2, D.31.1.3, D.31.1.5) as appropriate and the Safety Code should also be on display in all areas.

1.5.4. Instructions to Competitors in SRs and Final Instructions for events affecting Footpaths or Bridleways should include the following warning: This event is routed along and/or across Rights of Way. Competitors must exercise caution and reduce their speed accordingly near other users. Be especially careful near horses. Slow down, stop and switch off your engine if necessary.

Note: Throughout these sections an asterisk(*) indicates a requirement for additional information to be printed in the Supplementary Regulations (SRs). Text shown in Italics indicate a Regulation which may be amended in the SRs. Text shown in red indicates a new or amended regulation for 2022.

Judges

1.6. Judges may be appointed to adjudicate on any infringements of the Regulations including:

1.6.1. Touching markers.

1.6.2. Conforming with the course.

1.6.3. Remaining seated in accordance with the Regulations.

1.6.4. Stopping forward motion.

1.6.5. Noise.

1.6.6. Baulking.

1.6.7. Entitlement to a re-run.

Spill Kits

1.7.1. At each section, Organisers must provide at least one medium spill kit.

1.7.2. This spill kit can be carried by a Section Marshal escorting Competitors around the various sections.

1.7.3. Where sections are closely grouped, one spill kit located at a clearly visible central point is permitted.

1.7.4. For all Hill Rallies, Competitive Safaris, Point to Point, Challenge Events and Orienteering a medium spill kit must be located at the start of the course, each Special Stage or section.

Organisers' Regulations: All Events Using the Highway

2.1. The SRs must specify the time at which Competitors must report at the Start, and whether or not public roads are used to link sections of the Competition.

2.2. Any Competition traversing a highway in England, Wales or Scotland is subject to the provisions of the Motor Vehicles (Competitions and Trials) Regulations. In particular:

2.2.1. Application for authorisation of an event must be made to the Competition Authorisation Office (CAO) at Motorsport UK, or for Scotland to the Royal Scottish Automobile Club. Details of the Authorisation Procedures are available from Motorsport UK and RSAC as appropriate.

2.2.2. Deleted.

2.2.3. Application for a Motorsport UK Permit must be made in accordance with D.41 prior to the CAO Authorisation being granted. The Permit itself is only validated after authorisation has been granted.

2.2.4. In the case of road courses, route selection is subject to Motorsport UK approval. Applications must include a detailed itinerary giving the exact distances to be covered.

2.2.5. Vehicles should be checked for sound by qualified Driving Standards Observers before the start and along the route, and noisy cars stopped if necessary.

2.2.6. Any Holding Controls should be located to avoid public nuisance. Sensitive areas along the route should be drawn to Competitors' attention. Marshals should be well briefed and readily identified.

2.3. Instructions on sensible use of the roads should be issued, including the following:

2.3.1. Closing of gates, etc.

2.3.2. Clearing of roads at section ends.

2.3.3. Following the 'Country Code', failure of which can lead to disciplinary action.

Duties and Responsibilities of the Clerk of the Course

2.4. In addition to the duties detailed in G.5, the Clerk of the Course should ensure:

2.4.1. The Organisation and Regulations for the event meet the requirements of the relevant Statutory Instruments.

2.4.2. Reasonable precautions are taken in the selection of route, time of day, control of spectators, etc, to avoid inconvenience to the general public.

2.4.3. Where the farming community may be affected, details of the event are sent to the County Secretary of the local National Farmers' Union and any other relevant National bodies.

2.4.4. The appointed CAO Route Liaison Officer for each of the Counties and National Parks through
which the route passes is consulted about the draft route at least three months before the event and before submission to the CAO, particularly where special public relations work is required in sensitive areas.

The Route Liaison Officer may:

(a) Ask to see all paperwork relating to the event, including PR sheets

(b) Request the CAO to suspend authorisation, or Motorsport UK to suspend the Permit, until satisfied with the route and the effectiveness of the PR work

(c) Require the Clerk of the Course to order re-routes to avoid areas of particular concern.

2.4.5. Exercise discretionary judgement on where competitive sections may be run and their length, and withhold agreement to the route if not satisfied with any aspect of the organisational standards or route planning.

2.4.6. Private property, whether on the event route or a link section, is not to be used without written permission from the landowner or authorised agent.

2.4.7. Wherever possible the route should be checked for possible damage immediately before and after an event.

2.4.8. When the Motorsport UK medical and safety radio frequency (81.575Mhz FM and 81.5375Mhz FM) is to be used, it must be operated in accordance with Ofcom and Motorsport UK licensing requirements (available on request) (14.2).

Time Schedule

2.5.1. Wherever Competitors are on a public highway, they must be controlled by a predetermined speed schedule, unless they are allowed to complete the event in their own time.

2.5.2. The event time schedule must not lead Drivers to exceed any statutory speed limits, or involve speeds which might be considered dangerous or unreasonable in the light of prevailing traffic conditions and the nature of the route.

2.5.3. No time or speed schedule should be imposed which requires or encourages Competitors using a road open to the public to achieve an average speed between any two points which exceeds the following limits:

(a) 30 mph for all roads other than motorways

(b) 60 mph for motorways

(c) 25 mph for vehicles subject to a speed limit (such as vans)

(d) 20 mph for neutral sections (3.4, 3.5) (except on M, A or B class roads).

2.5.4. In addition there must be no bonus for exceeding the specified average. Competitors must be given in advance all the information necessary to enable them to calculate the speed which they are being asked to average 26.1.11.

2.5.5. For those portions of the route being navigated by map references, the direction of approach to controls should be specified and penalties imposed for approaching from any other direction whenever the country being traversed makes this possible without destroying the need for competitive skill.

2.5.6. The use of gated roads should be avoided if possible.

2.5.7. If Competitors are to traverse a gated road, adequate arrangements must be made to ensure that all gateways are manned by Marshals to ensure that no Competitor is required to open a gate, and that all gates are closed after the Competition.

2.5.8. Occupiers of land adjacent to the road must be advised in advance of the Competition.

2.5.9. The use of single track roads should be avoided if possible during daylight, but if used, the speed set must be lowered as appropriate.

2.5.10. Those sections of an event involving difficult navigation by map references or a detailed route card must be scheduled so that no Competitor is traversing minor roads during the morning or evening hours when normal farm traffic may be expected, unless the required average speed is not more than 20mph.

2.5.11. No Competitor is allowed to drive more than 200 miles continuously without a break, and there must be a rest period of at least one hour for each Driver at intervals of not more than 200 miles (25.2.3).

2.5.12. Any event which runs for more than 14 hours must include a rest halt of at least two hours, unless previously agreed with Motorsport UK.

Controls

2.6.1. Controls must be sited at locations with adequate space for Officials' and Competitors' cars to stop without affecting non-rally traffic.

2.6.2. Controls must be sited at least 500m from occupied houses, except where written approval has been obtained from the occupants.

2.6.3. All controls must be clearly identified at the roadside (26.1, 35).

2.6.4. Controls at which Competitors are required to stop to record a time, and which are on the public highway, must not be less than two miles from any adjacent control.

2.6.5. Competitors must be provided with allnecessary regulatory information at or before their starting time.

2.6.6. Competitors must be started on the road sections of an event at intervals of one minute and leave the start in numerical order, unless the SRs specify a longer time interval or a different order.

Official Documents

2.7. In addition to D.10, the SRs must clearly state:

2.7.1. The type of event (Hill Rally, Trial etc) that is being organised, and whether or not there will be standard sections, special stages, regularity sections, trials sections or other types of test.

2.7.2. When details of the route or any section or stage will be issued.

2.7.3. Any maps (and their scale) required and any modification of 51.4. In any dispute concerning mileages, these shall be calculated in accordance with 1:50,000 OS maps (or equivalent local maps).

2.7.4. The type of timing to be used.

2.7.5. A reminder of which sub-sections of the Technical Regulations apply.

2.7.6. Whether or not vehicles are required to be taxed and insured for use on the highway (60.1).

2.7.7. Whether Competitors are required to carry Competition numbers (25.1.5, 36.4, 41.2, 50.5.1).

2.7.8. Whether servicing is Permitted and if so the manner in which service vehicles will be identified.

2.7.9. If competing cars or Service Vehicles are required to carry any identification markings, the name of the organising Club must be incorporated on the identification.

2.7.10. Any information which is required in order to comply with 26.1, 27.4.2.

2.8.1. All Official bulletins, Permits and authorisations, times and results (unless issued in accordance with D.26.1.2) must be published on an Official Notice Board whose location must be notified to Competitors (G.3.2, G.11.2.2, 24.1.1).

2.8.2. Stewards (or Observers for the upgrading of an event) should be supplied with a complete marked map of the route prior to the date of the event, and a set of all instructions and route cards, etc that are issued to Competitors and Officials as soon as they are available.

2.9. The Road Book, Route Card or Time Card shall clearly:

2.9.1. Indicate the description of each section (Standard, Neutral, Transport, Regularity, Trial etc) (3.1).

2.9.2. Specify the time allowed to traverse the route between each Time Control and all the information necessary to enable Competitors to comply with 2.4.

2.9.3. Indicate what information the Organisers require to be recorded and the places at which these records will be made (26.1.8, 35), except as provided for in 27.2.

2.9.4. Indicate which checks will be manned by Officials, except checks established in accordance with 27.2.

2.9.5. Specify which portions of the route shall be timed to less than one minute.

2.9.6. Indicate any 'out of bounds' areas to be respected.

2.9.7. Indicate the position of all Stop signs along the route, any other junctions at which Competitors are required to stop, and any areas where they are required to observe special restrictions (ie Quiet Zones, etc).

2.9.8. Specify the order in which controls and checks must be visited.

Sound Testing

2.10. Prior to the start all cars, including those of Officials who are expected to follow a substantial part of the route, must pass a sound test conducted by an Environmental Scrutineer using a sound meter, as prescribed by the Technical Regulations (J.5.17, G.10.1 to 11.2).

2.10.1. This test will prohibit any vehicle with a reading over 100dB(A) from starting, unless the SRs specify lower levels.

2.10.2. All measurements refer to the 0.5m test (J.5.17).

2.10.3. Organisers must make arrangements for a suitable site to be available for testing and ensure that adequate personnel are appointed.

2.10.4. A further sound test for Competitors and Course Cars must be made on the road sections. These must be manned by a Driving Standards Observer (G.11.1 to 11.2, 27.2), experienced Judges (G.10.1, 27.1) or by Judges using a sound meter. They have the authority to penalise Competitors on the spot and their findings must be recorded in the results of the event whether or not any Competitor has been disqualified.

2.10.5. The sound test Official may also act as a Driving Standards Observer.

Eligibility Checks

2.11. At events involving different Classes of vehicle, arrangements to undertake eligibility checks should be available prior to the Competition, or on conclusion.

2.11.1. All vehicles, including Course Cars, must comply with the relevant Technical and Safety Regulations.

2.11.2. Checks may be carried out both before and during an event.

2.12. The Chief Scrutineer must be available throughout the event to ensure that the Technical Regulations are complied with.

Timekeeping

2.13. A Motorsport UK-approved Rally Timekeeper should be appointed as a Chief Timekeeper for any event where timing is to less than one minute.

2.13.1. The Chief Timekeeper appointed for the event is responsible for the issuing of timing equipment and ensuring that the Timekeepers who will be using the equipment are competent in its use.

2.13.2. The Chief Timekeeper must be able to deal with operational problems affecting timing equipment and be capable of dealing with queries arising from the time cards.

2.13.3. Any section of an event which has timing to less than one minute must be timed by certified equipment, digital clocks to Motorsport UK specification R or E/B, recording clocks printing to seconds, or automatic apparatus.

2.13.4. All Official clocks or watches must be set to GMT/BST time.

2.13.5. Any Official timepiece timing to the minute which is not within 15 seconds of GMT/BST, or any Official timepiece timing to the second which is
not within five seconds of GMT/BST, will be disregarded.

2.13.6. Times will be recorded to whole minutes, unless the SRs state otherwise.

2.13.7. Any portions of an event to be timed to seconds will be clearly indicated in the Road Book, Route or Time Card.

Definitions of Event Sections

3.1. The following definitions and restrictions apply to the various sections of an event.

Standard Sections

3.2. If timed to the second, Standard Sections should not:

3.2.1. Pass through any area with over 20 occupied dwellings within a 300m radius of the route, unless with written agreement from all the householders and Motorsport UK permission.

3.2.2. Start before 23.59 or finish more than one hour after sunrise.

3.2.3. Include any point where Competitors are required to observe special restrictions on their driving behaviour, except for observing signs warning of natural hazards (which may be erected by Organisers). 'Quiet' zones or other restrictions are specifically forbidden.

3.2.4. Join or cross any A-class road, except where there is a manned control at which Competitors must stop.

3.2.5. Start on or use an A-class road continuously for more than 200m.

3.3.1. When timed to less than one minute, Competitors must not use any private property, other than footpaths and bridleways for which approval has been granted.

3.3.2. Additionally Organisers must not:

(a) Offer any award for Competitors who equal or improve upon the time schedules for individual sections, nor have any awards for the fastest times or least penalties on any sections

(b) Operate a Flying Finish time control

(c) Include any road with a 30 or 40mph limit without the express permission of the RLO

(d) Require Competitors to average in excess of 30mph.

Neutral Sections

3.4. Neutral Sections are used to take Competitors through PR-sensitive or densely populated areas and must comply with 3.3.2.

3.4.1. They should be completed by Competitors without the use of auxiliary lighting, except legally required in fog or falling snow.

3.4.2. Organisers must remind Competitors of this requirement in their SRs.

3.5. Neutral Sections should not:

3.5.1. Be timed to less than one minute.

3.5.2. Allow Competitors to make up time on the public road.

3.5.3. Have any lateness penalty applied, except maximum lateness.

3.5.4. Have an average speed of more than 20mph, except on M, A or B class roads.

Regularity Sections

3.6. Competitors must be informed in advance of the locations of the Start and Finish of any Regularity Sections.

3.6.1. Each Section must contain at least one Intermediate Time Control, the location of which must not be given to Competitors in advance.

3.6.2. Competitors must, however, be advised in writing before entering such a section whether they are required to stop at Intermediate Time Controls which must be identified by a Control Board.

3.6.3. Adherence to the time schedule in a Regularity Section is assessed by comparing the time of arrival at any Intermediate Time Control (or the Finish Time Control) with the time of arrival at the preceding Time Control. Timing, whether or not the car is required to stop, is based on the moment a car enters the Time Control area.

3.6.4. Penalties, which must be specified in the SRs, are imposed for stopping within sight of but outside the area of any Intermediate Time Control (or the Finish Time Control).

Transport Sections

3.7. Transport Sections are used to move Competitors between other types of section where the route is not PR sensitive or densely populated.

3.7.1. Transport Sections must also comply with 3.3.2 and 3.3.4.

3.7.2. If using roads with 30mph or 40mph limits in force, Organisers must impose a lower average speed commensurate with the proportion of restricted roads in the section.

3.8. Transport Sections must not:

3.8.1. Be timed to less than one minute.

3.8.2. Be less than four miles in length.

3.8.3. Have any lateness penalty applied, other than for maximum lateness.

Road Sections

3.9. Road Sections comprise any sections of a route on a Hill Rally (excluding control and service areas), whether on the public highway or not, which link Special Stages.

3.9.1. When on the public highway, these sections must comply with 3.1 to 3.8.3 (except 3.2, 3.3.1 and 3.3.2(a)).

Trials Sections (47-58)

3.10. A Trials Section is a test laid out over undulating ground designed to bring Competitors to an involuntary stop.

3.10.1. The course comprises a series of 'gates' defined by marker canes where Competitors' performance is measured according to the number of gates 'cleared' without stopping, leaving the course or touching a course marker.

Special Stages

3.11. Special Stages are timed sections run on roads or land for which the event has exclusive vehicle access, or on public roads Officially closed for motor sporting purposes.

3.11.1. If run partly or wholly on unsealed surfaces, they should be organised so that no Competitor achieves an average speed in excess of that specified in 11.3.2.

3.11.2. Special Stages should be over a distance of not less than a half mile.

3.11.3. No stage exceeding 20 miles may be run without written permission from Motorsport UK.

3.12. Special Stages should not:

3.12.1. Include any checks or controls or other requirements which might require or encourage Competitors to stop.

3.12.2. Use any sections of a venue in opposite directions at the same time, unless there is at least a 15m separation between the two routes with a continuous barrier. Cross-roads used twice must preserve this separation. The barrier must consist of one or more of the following: tyres banded in threes, straw bales, earthbanks or similar immovable objects. Motorway cones or blocking tape are not suitable.

3.12.3. Use any currently, or previously, licensed Race, Speed or Kart circuit, or any airfield (disused or otherwise) unless Motorsport UK has specifically approved the stage layouts and safety precautions.

3.12.4. Be routed closer than 75 metres to any parked aircraft, unless there is a solid physical barrier at the edge of the course protecting the aircraft and a gap of 45 metres from the barrier to the aircraft.

Public Relations

4.1. Effective public relations work must be undertaken by Organisers of all events using the Highway. The following advice will be useful:

4.1.1. Prior consultation with Route Liaison Officers who might require additional PR work in sensitive areas is essential. The work should be completed to allow enough time to undertake a re-route should this prove necessary.

4.1.2. Be diplomatic, positive and clear about the legal aspects of route authorisation. If the event is run in England or Wales, do not intimate that it is authorised by the Police.

4.1.3. Avoid asking for 'authorisation' or 'permission' from householders as this can invite unnecessary difficulties. Special consideration should be given to householders with pets or livestock.

4.1.4. All PR must be carried out by responsible members of the organising Club or of a Local Club. All PR letters should be vetted and checked by the RLO and must indicate who the Organiser is (with a contact address and phone number), the date of the event, in which direction it is travelling, and the approximate time of passing.

4.1.5. Where Organisers publish a guide to the route, or specific locations for spectators, they should ensure that:

(a) Householders within 500m of any specifically advised location have been effectively contacted without difficulty and that these areas are properly Marshalled

(b) The information contains warnings of locations that spectators should avoid (blackspots, sensitive areas etc).

4.1.6. Ensure that each PR crew prepares a report on each visit and that these are available to the RLO on request, and to the Clerk of the Course and Stewards at the event. Special note should be made of problem areas and reports must passed to RLOs for the benefit of future events.

4.1.7. Contact should be made with local Police stations before and immediately after all events.

4.2. See charts 10(a) and 10(b) Section R, Appendix 1 for detailed requirements.

Events Using the Highway (except Hill Rallies)

4.3. All Events Using the Highway (except Hill Rallies) must comply with the following:

4.3.1. The location of all 'Give Way' junctions on the route must be issued to Competitors along with clear instructions as how to deal with them (36.2).

4.3.2. Organisers must familiarise themselves with the medical and ambulance facilities along the route.

4.4. Treasure Hunts must comply with the following:

4.4.1. No merit must attach to being the first to arrive at the Finish or any other point.

4.4.2. Competitors must not be required to arrive at any point other than the Finish at or by a specific time.

4.4.3. Where an overall time limit is set for an event, it must be possible to win without exceeding an average speed of 10mph from Start to Finish.

4.4.4. Competitors must not be required to travel more than 100 miles on a highway or to perform any task or solve any problem that is likely to inconvenience or offend other road users or the general public.

Organiser's Regulations: Trials and Un-timed Events

Cross Country Vehicle Trials (41.1 to 43.4)

5.1. These trials must be organised in accordance with 1 to 4 as appropriate, and the use of road sections should be avoided.

5.1.1. The SRs must clearly state if the highway is to be used (2.1 to 2.3).

5.2.1. Where applicable, Competitors should be split into equal groups, which should start at different observed sections simultaneously.

5.2.2. The Start and Finish of observed sections must be marked by signs and the Starts should be reasonably flat and wide so that all Competitors can at least enter the section.

5.2.3. The layout of sections should take account of the location of possible failure points and, particularly for Tyro Trials, safe exit routes.

5.2.4. The layout should facilitate Marshalling by the minimum possible number of Officials.

5.2.5. Sections should be as wide as possible to allow a choice of route and as winding as possible to place a premium on driving skill (although the radius of all corners must be adequate for all vehicles entered).

5.2.6. Course markers should not be placed against trees.

5.2.7. The use of trees or natural hazards as course boundaries should be avoided.

5.2.8. If possible, alternative routes should be planned in case of changes of weather condition.

5.3. It is recommended that sections be laid out using a minimum of 10 pairs of marker stakes (see Appendix 1, drawing number 5.3) of a minimum height of 1m, and with colour coding to clearly identify each side of the route.

5.3.1. Metal rod markers should not be used.

5.3.2. Markers should be placed to avoid the likelihood of Competitors putting all wheels out between markers, or where they are likely to be moved by bushes or branches.

5.4. Clearly visible sub-section numbers should have a minimum figure height of 50mm.

5.4.1. If sub-section numbers are not placed on both sides of the route, they should be on the right-hand side with corresponding guide markers on the left.

5.4.2. Sub-section numbers should be closely grouped in areas of expected failure.

5.5. A minor proportion of the sections can be timed, but any time penalties must be related using a published formula to points lost on a section.

5.5.1. Timed sections must be a maximum of 200m long, and the maximum time allowed for the section shall be stated.

5.5.2. Approaches to and exits from sections must not present any unreasonable hazard or difficulty.

5.6. There should be sufficient Marshals at each observed section to ensure safety procedures are followed, and adequate Judges in attendance (1.6).

5.7. Organisers may at any convenient time after the start of a Competition require any Competitor to increase or decrease their minimum Permitted tyre pressure by a maximum of 5lbs/sq.in. This decision must be advised to Competitors in writing and sufficient time allowed for them to comply.

Junior Trials (45)

6.1. Junior Trials must be organised in accordance with 5. and at all times during these event vehicles may only be driven under the instruction of an Official.

6.1.1. Where a Junior Trial is held concurrently with another event at the same venue, the area for the Junior Trial must be adequately separated and clearly defined.

6.1.2. Special consideration must be given to the terrain chosen, particularly with regard to side slopes and drops, and water should generally be avoided.

6.1.3. Where present, the maximum depth of any water must be 0.2m.

6.2. There are three Classes of Junior Trial: Novice, Intermediate and Expert.

6.2.1. The maximum Permitted gradients for each is as follows:

	Novice	Intermediate	Expert
The maximum longitudinal gradient	50%	60%	N/A
The maximum transverse gradient.	25%	35%	N/A

6.2.2. A Motorsport UK Observer may be appointed at Junior Trial events.

Tyro Trials (44)

7.1. These must be organised in accordance with 5. and the following:

7.1.1. The terrain chosen should ensure that vehicles do not catch any bodywork on approach, ramp breakover, or departure angles, and consideration should be given to the vehicles entered when laying out sections.

7.1.2. Any longitudinal gradient must be 50% maximum.

7.1.3. Any transverse gradient must be 25% maximum.

7.1.4. The depth of any water must be 0.3m maximum.

7.1.5. Vehicles must be capable of traversing sections without making contact with any trees, bushes or other natural features.

7.1.6. No features may be included within sections which are likely to cause damage to the underside of competing vehicles.

Winch Recovery (46)

8.1. The aim of these events is to safely and precisely winch an object between two points via gates and different routes as defined in the written instructions. They must be organised in accordance with 1 to 1.6 and the following:

8.1.1. The Course can be laid out over any type of terrain but must be on private ground in an area prohibited to spectators. It must be taped or roped off to indicate the boundary to Competitors and spectators and comply with 8.1.4.

8.1.2. Natural anchorages may be used at the discretion of the Clerk of the Course but must be protected from damage.

8.1.3. All objects to be recovered must have a good quality chain attached, to the satisfaction of the Clerk of the Course. If the object is a vehicle then all glass must be removed where appropriate. The steered wheels may be locked in any position and one or more wheels may be removed.

8.1.4. The Clerk of the Course may stop a team if their mode of recovery is considered likely to be dangerous to officials, competitors, spectators or the natural terrain. Penalty points will be awarded if any gate or previously specified object is touched by either the object or team.

8.1.5. The Organisers will allocate Competition numbers at random and teams will start in numerical order.

Promotional Events (47)

9.1. These are non-competitive events designed to enable participants to experience driving their vehicles off-road and to introduce them to organised off-roading. They must be run in accordance with D.5.1 and the following:

9.1.1. They must consist primarily of a liaison route or routes wholly off the public highway, which may also include optional, simple, and non-damaging, trials type sections.

9.1.2. The liaison routes and any special sections should be clearly marked and adequately Marshalled.

9.1.3. Clubs may not organise more than three Promotional Events per year.

Organiser's Regulations: Timed Events

Cross Country Vehicle Timed Trials (48)

10.1. These trials must be organised in accordance with 5. and the following:

10.1.1. The instructions must state the maximum time and the target time allowed to complete each section.

10.1.2. The target time must be set at no more than 22mph (10m/s) average.

10.1.3. The maximum length of any Timed Trial section must not exceed 320m.

10.1.4. Events must be timed using equipment as specified in 11.4.

10.1.5. Each section must be clearly identified and must be a prohibited area for all persons except Officials and those Competitors attempting the section (D.31.1.2).

10.1.6. The Chief Scrutineer at a Timed Trial must be appointed from the list of Motorsport UK Technical Officials.

Competitive Safaris (49)

11.1. Competitive Safaris must be organised in accordance with 1 and the following:

11.1.1. All courses must be on private ground and should be laid out at one venue only.

11.1.2. Timed sections must run over roads or tracks from which all vehicle and animal traffic has been excluded. These need not be marked on definitive maps.

11.1.3. The route should be made as safe as possible and unmistakable for Competitors and spectators.

11.1.4. Means of access, both to the section and to the site, should be closed by barriers and signs to prevent any non-competing vehicle gaining access.

11.1.5. Warning notices as detailed in D.31.1 to 32.5. should be displayed, and areas of particular danger (eg escape routes) should be marked with signs as specified in D.31.1 to 32.5.

11.2. It should be impossible for anyone on foot to get on to any stage through normal access roads or tracks without:

11.2.1. Being aware of it.

11.2.2. Having been seen by an Official.

11.2.3. Having seen a warning notice.

11.2.4. Having seen the Safety Code.

11.3. The course can involve trials type sections, the surmounting of natural obstacles or hazards, or points at which the crew may be required to dismount to perform a set task.

11.3.1. Wherever possible the course should be not less than one mile long, and where the terrain makes this impossible, at least a quarter mile long.

Timing

11.3.2. The average speed must not exceed 30mph unless run in accordance with minimum safety requirements of a Hill Rally Special Stage, when the average speed must not exceed 50mph. Competitive Safaris timed in excess of 30mph shall be referred to as Safari Plus.

11.3.3. No Competitor exceeding the specified average speed should gain any advantage nor be penalised.

11.3.4. Competitors must not be offered any award for equalling or improving upon the target time, or achieving the fastest times or least penalties for such sections.

11.3.5. The Final Results must include a statement of the course length.

11.4. For Clubmans events the following is strongly recommended. Interclub and higher events must be timed by:

11.4.1. Certified equipment.

11.4.2. Digital clocks to Motorsport UK Specification R or E/B.

11.4.3. Recording clocks printing to seconds, or

11.4.4. Automatic apparatus.

11.5. All times recorded must be to the previous whole second only.

11.5.1. Where timing is actuated by a light beam, vehicles must be positioned at the Start with the part which will break the beam 1 to 2 metres behind the beam.

11.6. Where an event is timed manually, and the Start Marshal has instructed a Competitor that they are next to start, the starting procedure shall be either of the following:

11.6.1. The Marshal will give a loud verbal indication of 30 seconds to go, 15 seconds, 10 seconds and 5 seconds, and then count down verbally each second 5-4-3-2-1-GO. Upon the signal GO, a visual starting signal must be given, which will normally be the raising of a flag from the bonnet (not the windscreen). Any other visual signal to be used must be described in the event SRs. False starts will be penalised in accordance with charts 30.1.1(h) or 30.1.2(h).

OR

11.6.2. Before the illumination of the green light indicating that a Competitor may start, a red light is illuminated warning that their countdown is imminent. The SRs must specify the countdown method. Timing will start from the green light, whether or not the Competitor starts immediately on its illumination.

11.7. Courses and Stages where Competitors are required to start at intervals of less than one minute may dispense with the '30 seconds to go' advance warning. This procedure must be advised in the SRs.

Course Organisation

11.8. There must be adequate communication between Start, Finish and intermediate points.

11.8.1. Adequate Marshals must be posted along the course, particularly at any potentially dangerous points, at any observed section and where recovery operations may be required.

11.8.2. Rescue vehicles must be positioned at Predetermined locations, to transport any injured crew or Officials to the medical or first aid facilities.

11.8.3. Motorised reconnaissance of the course is forbidden, unless specifically allowed by the SRs, and then only if run to the requirements of a Promotional Event, and in a controlled convoy with lead and tail Official course vehicles.

Course Marking

11.9. The course should have a clearly marked route so that no navigation is required, and all course markings should comply with 51.1.

11.9.1. The correct route should be indicated to Competitors by arrows and signs, and by physical blockage of all but the correct road.

11.10. These indications must, wherever possible, be consistent with the illustrations overleaf and with the following:

11.10.1. Arrowing should be reduced to a minimum and placed only at junctions.

11.10.2. Really acute bends or hazards where a drastic reduction in speed is required should be marked by a Caution Board. Caution Boards, comprising red exclamation Marks on a white background 51cm x 38cm, will be displayed on each side of the stage between 40 to 50 metres before the hazard. At the hazard a pair of diamond shaped orange markers at least 150mm x 150mm will be placed each side of the stage. These will be repeated, in pairs, on each hazard if there is more than one hazard to which the warning refers (see Appendix 1, chart 11.10).

11.10.3. All signs should be placed approximately 1.2m from the ground. Wherever possible arrows and signs should be Dayglo red or orange and should be easily visible. To avoid confusion, multiple signs on one post should be avoided.

11.10.4. Advance warning signs for junctions should be between 50m and 100m before the junction. Two arrows should be visible on the junction, fixed so as to form a 'gate' through which the Competitor will pass. Arrows may be angled to show the severity of the junction, indicated by one of four basic positions, either vertical, horizontal, raised or lowered by 45°.

An example of the method used must be shown to Competitors before the event.

11.10.5. A vertical arrow should confirm the correct route immediately after a junction.

11.10.6. A wrong direction should be indicated by a standard No Entry sign (a red disc with a white bar) and all but the correct road should be visibly blocked by means of tree trunks.

11.11.1. The location of all Motorsport UK-listed danger spots on the route must be clearly marked in the Road Book or Stage Tulip Diagrams.

11.11.2. Special warning signs, a minimum of 51cm x 38cm and fixed on a stake, must be erected in a clearly visible position.

11.11.3. The sign must show two exclamation marks, and be preceded at 50m and 100m by similar exclamation marks.

11.11.4. Both signs must be Marshalled throughout the event.

11.11.5. Other hazards should be indicated by single exclamation signs 50m and 100m before the hazard (a Motorsport UK list available to Organisers on request).

11.12.1. If a section of road is used twice on stages where the route divides, or where two roads merge, the junction itself should be clearly marked by a white board at least 76cm x 61cm, illustrating the nature of the junction.

11.12.2. Figures on this board should be at least 16cm high.

11.12.3. The junction should be preceded by similar signs at 100m and 200m showing Motorway-type count down diagonal bands.

11.12.4. Judges of Fact should be placed at the split junction to record penalties on Competitors overshooting and reversing back against the route of competitive traffic.

11.12.5. Where Competition routes merge on a lapping course, the angle between the two roads (prior to the common route) should be no more than 45° to each other, and on joining should run separately, but in parallel, for at least 100m before merging.

11.12.6. Signs of a minimum size of 76cm x 51cm must be shown to Competitors as detailed in Appendix 1, chart 26(b).

11.13.1. Arrows must have a bright, preferably Dayglo finish facing the Competitor.

11.13.2. Where the course changes direction repeatedly without any natural features, arrows must have a contrasting colour on the reverse side (preferably matt black or white) with tape staked at reasonable intervals to further define the course.

11.14. The Flying Finish line must be located a sufficient distance from the Stop Line to allow Competitors to decelerate in a controlled manner, especially where they proceed directly into a Service Area.

11.14.1. Bad weather, slippery conditions and the speed potential of cars crossing the Flying Finish Line will require a greater distance.

11.14.2. The area between the Flying Finish and the Stop Line should be free from bends, sharp or deceptive corners or hazards such as gates or ditches. This area is prohibited to spectators.

Senior Officials

12.1. The Clerk of the Course at a National or International Competitive Safari must be licensed as in 1.1.11.

12.2. The Chief Scrutineer at a Competitive Safari must be appointed from the list of Motorsport UK Technical Officials.

12.3. An Event Safety Officer should be appointed, experienced in the operation of current competitive safaris, who appreciates the potential problems of vehicles competing in differing conditions. The same Officer may also assume the duties of Chief Marshal and can be responsible for ensuring effective arrangements are in place to supplement the general Marshalling strength organised by the Clerk of the Course as follows:

12.3.1. There should be pre-determined arrangements available for summoning appropriate emergency services, via rendezvous points if necessary, to the scene of an incident.

12.3.2. Unless the complete route is visible from the Start or Finish areas, there should be an effective radio communications network (excluding CB radios) operated through a nominated Controller under the direction of the Clerk of the Course, linking Officials at the Start, Finish and intermediate points with rescue and medical services.

12.4. The Chief Medical Officer or Chief Paramedic, being a Doctor or Motorsport UK Registered Paramedic, is responsible – in consultation with the Clerk of the Course and the Event Safety Officer – for ensuring that the required level of medical and rescue cover is provided.

Live Recovery

13.1. At Competitive Safaris and Hill Rallies, Live Recovery (the recovery of stranded Competitors whilst the course or stage is still live) may only be undertaken in accordance with the following:

13.1.1. The SRs must state whether Live Recovery will be operating at an event and the Clerk of the Course must brief Drivers on the procedures.

13.1.2. It can only be undertaken by dedicated Specialist Recovery Vehicles (SRVs) deployed by the Clerk of the Course at potentially difficult locations.

13.1.3. It must not be used for accidents which must be dealt with by the appropriate medical and rescue services deployed by the Clerk of the Course.

13.1.4. The SRV must comply with 58.1 and be equipped with appropriate tyres, substantial towing points, a suitable tow rope, a Yellow Flag, a roof mounted amber warning beacon and a radio (either on the Motorsport UK medical and safety frequency (2.4.8) or on a PMR frequency licensed for the event: CB Radio is not acceptable).

13.1.5. The crew will comprise a minimum of two people who must wear high visibility jackets at all times. The first will operate the SRV and radio communications, the second will warn other Competitors that Live Recovery is in progress by displaying a Yellow Flag at a suitable distance ahead of the recovery location.

13.1.6. It is the Competitor's responsibility to attach and detach the tow rope from the SRV vehicle during Live Recovery. Exceptionally, where available, a third crew member can attach and detach the tow rope and supervise the operation. Three-person crews are strongly recommended for National events.

13.1.7. Procedures must be identical for each SRV deployed at an event.

13.2. The procedure for a Live Recovery operation must be as follows:

13.2.1. The SRV must report the number of the stranded vehicle by radio and should not commence operations without permission.

- The second crew member then proceeds on foot to a safe distance ahead of the stranded vehicle and displays a Yellow Flag to warn other Competitors that a Live Recovery is taking place.

13.2.2. The SRV must display a flashing amber beacon and flashing hazard lights at all times during Live Recovery.

13.2.3. In reaching a stranded vehicle, it must avoid travelling across or along the course, except in positioning itself to approach the recovery from a down-course direction, and place the stranded vehicle between it and approaching Competitors.

13.2.4. Course Marshals may assist the SRV crew and must ensure all spectators are kept clear.

13.2.5. Wherever practicable, the stranded Competitor must be pulled through or over any obstruction in the direction of travel along the course.

13.2.6. When the SRV is in position, the first crew member should instruct either the Passenger or Navigator of the stranded vehicle (or the third crew member) to attach the tow rope between the vehicles. Once attached, they must stand clear and indicate to the first crew member that it is safe to commence recovery.

13.2.7. On completion of the recovery, the first crew member will indicate to the Passenger or Navigator (or third crew member) that it is safe to detach the tow rope between the vehicles, ensure that the tow rope is properly stowed and then indicate to the first crew member that it is safe to move the SRV clear.

13.2.8. Once the first crew member reports that the SRV is clear, the second crew member can allow Competitors to proceed past the recovery location.

Hill Rallies (50-51)

14.1. These must be organised in accordance with 1 to 4, 10 to 13 and the following:

14.1.1. Competitors must be seeded in order of anticipated performance, with the first Competitor having the best performance potential, unless Motorsport UK has given prior approval to the contrary.

14.1.2. All special stages must not be less than a quarter mile long in demanding terrain, or 1 mile in other instances.

14.1.3. Trials-type sections or tests may be incorporated within special stages.

Duties and Responsibilities of the Clerk of the Course

14.2. In addition to the responsibilities detailed in 18, the Clerk of the Course should ensure the following:

14.2.1. The use of the public forest estates managed by Natural Resources Wales, Forestry and Land Scotland, and Forestry England has been approved by Motorsport UK. Permission must be applied for by an annually specified date, (1.1.10). No contact should be made with the Forestry Commission prior to receiving approval from Motorsport UK, or an appointed Forestry Liaison Officer.

14.2.2. Other motor sport users of venues to be included in special stages must be notified of arrangements.

14.2.3. The Chief Scrutineer must be appointed from the list of Motorsport UK Technical Officials.

14.2.4. A Stage Commander should be appointed for every stage, with the responsibility for ensuring that the stage complies with the Regulations.

14.3. An Event Safety Officer should be appointed. The Officer should be experienced in the operation of current Hill Rally stages and have an appreciation of the performance of Hill Rally vehicles in differing weather conditions.

14.3.1. The Officer should be assisted by a Spectator Safety Officer who is responsible for specific arrangements to accommodate spectators in suitable areas, to prevent their accessing unsuitable areas and to make suitable access facilities for spectators' use.

14.3.2. The Event Safety Officer is responsible for ensuring effective arrangements to supplement the general Marshalling strength organised by the Stage Commander as follows:

(a) Ensure arrangements are available to every Stage Commander for summoning appropriate emergency services, via rendezvous points if necessary, to the scene of any incident

(b) Unless the complete route is visible from the Start or Finish areas, provide an effective radio network, operated through a nominated Controller under the direction of the Stage Commander, linking Officials at Start Finish and intermediate points with rescue and medical services. The frequency must be secure and either the Motorsport UK Safety Frequency or a privately-licensed frequency to Ofcom Regulations.

(c) The Controller must be experienced in the use of radios and in controlling a network, and must ensure the disciplined use of the radios. Where the Motorsport UK Safety Frequency is used, the Radio Controller must hold a valid Motorsport UK Controller's Licence (Notes on radio procedure are available from Motorsport UK).

14.4. Written instructions on the operation of the stages must be made available to all Officials and Marshals. These must clearly establish:

14.4.1. That the number of cars to be sent through any stage prior to the Competition is to be kept to a minimum; that the crew of each Course car has specific duties allocated by the Clerk of the Course on which they must report to the Stage Commander (or Deputy) immediately on completing each special stage; and that no stage can start until the Zero car crew have confirmed that the stage is ready for Competitors and Marshals have any spectators on the stage under their control (16.6).

14.4.2. That there must be no movement of any vehicle or of the rescue services once the stage has opened without the specific approval of the Stage Commander, and then only after suspending the stage and being satisfied that it is cleared of competing cars.

14.5. On special stages where it may be necessary to authorise the movement of non-competing vehicles prior to the stage being cleared, a system of red flags must be in place.

14.5.1. These flags can only be located at radio points and only displayed on the specific instruction of the Clerk of the Course or the Stage Commander.

14.5.2. Red flags must only be used when there is a Possibility of non-competing vehicles and rescue Services moving on a stage ahead of competing cars.

14.5.3. There must always be a red flag displayed at the Point where rescue or emergency vehicles join the route of a stage.

14.5.4. Competitors must be advised, in writing, which stages are operating this system and the procedure which they must adopt (51.1).

(a) That under no circumstances will any car be allowed to drive in the reverse direction of the stage

(b) That detailed emergency procedures and equipment have been made available by the Event Safety Officer

(c) That the priorities in dealing with an incident are first to deal first with the injured by removing them in a suitable vehicle if it is safe to do so, and then to deal with the vehicles if they constitute a hazard to the continued running of the stage or to property

(d) That no Competitor will be Permitted a re-run of a special stage (51.2.3)

(e) That the system of ensuring Competitors are positively monitored and checked through a stage is explained. Organisers may either use numbered stage time cards or note the previous Competitor's Competition number with the next Competitor to leave the start

(f) That all non-competing vehicles are parked in a safe place, or at least 30m from a road or track used as a Special Stage, between a point in advance of the Start control and a point 100m beyond the Finish stop control. Non-competing cars required solely for purposes of safety may be parked at any place designated by the Stage Commander as suitable

(g) That any road or track which can form an escape road between the start and stop controls should be kept clear and unobstructed for a distance of at least 100m, bearing in mind the potential approaching speed of a Competitor

(h) That the location of any competing car that fails to complete the stage is reported to the Stage Commander

(i) That the information required by the Clerk of the Course to consider 14.6.4 is available if the stage is interrupted or stopped for any period of time

(j) That reasonable precautions are taken to protect private property located adjacent to any stage against damage.

14.6. If the normal running of a Special Stage is stopped for any reasons after the passage of one or more Competitors, and it proves impossible to allow other Competitors to cover the stage competitively, the Clerk of the Course can give each crew that hasn't covered the stage a notional time corresponding to the slowest time set up before the interruption.

14.6.1. If the slowest time represents a complete anomaly, the next slowest time should be retained (and so on until the 5th slowest time).

14.6.2. However no crew which is totally or partially responsible for stopping a stage can benefit from this measure.

14.6.3. If they finish the stage, they will be given the time which they actually set, even if this is greater than the time awarded to other crews (27.4.3).

14.6.4. In any event seeding Competitors in reverse order of anticipated performance, the Clerk of the Course can give to Competitors a notional time corresponding to the fastest time set at the moment of any interruption, or apply the next fastest time (up to the 5th fastest time) if the fastest time represents a complete anomaly.

14.7. The Clerk of the Course has the right to:

14.7.1. Impose a penalty in accordance with 30.1.2(w) or 30.1.1(v) on any Competitor who causes or is part of a serious blockage on a Special Stage, whether intentionally or otherwise, if their actions prevent any other Competitor from completing the stage competitively.

14.7.2. Impose further penalties under C.2 as appropriate.

14.7.3. Appoint Officials to search Competitors and their vehicle for unauthorised Pace Notes (51.4). There should be two such Officials, one male to check male Competitors and one female to check female Competitors.

Special Stages

15.1. The route of a special stage may not be defined by grid references or any other method requiring Competitors to choose their own route.

15.1.1. Every effort should be made to site the Flying Finish at a point where cars can be expected to be travelling slowly as a result of a preceding bend or hazard.

15.1.2. No practising or testing is Permitted on any special stage before any event, unless specifically authorised by Motorsport UK.

15.1.3. The Flying Finish line must be at least 200m before the stop line, which should be at least 100m before any public highway.

15.1.4. Bad weather, slippery conditions and the speed potential of cars crossing the Flying Finish line will require these distances to be extended.

15.1.5. The area between the Flying Finish and the stop line should be free from bends, sharp or deceptive corners, or hazards such as gates, etc.

15.1.6. This area must be prohibited to spectators.

15.2. All Officials should be clearly identifiable and wherever possible:

15.2.1. Be in visual contact throughout the length of the stage.

15.2.2. Be in sight of all signs and arrows, and at prohibited areas.

15.2.3. Be placed where the public are expected to arrive to watch the stage.

15.2.4. Have some pre-arranged system for warning spectators of the approach of cars.

15.2.5. Be under the control of a Sector Marshal if appropriate.

15.3. Where a special stage forms a continuous circuit, Competitors must not be required to complete more than two laps.

15.3.1. Organisers should allow at least 100m separation from the start of the stage before Competitors join other cars already on the stage.

15.3.2. No individual stage on a multi-venue hill rally may use any particular section of road or track more than four times.

15.4. Throughout the event Stage Timing will be to the preceding second, using equipment as specified in 69.

15.4.1. The timing of any section should be recorded so that Competitors can ascertain its correctness. This prohibits the 'setting back' of the section finish watch.

15.4.2. Timing must be from a Standing Start to the Flying Finish line.

15.5. No Competitor should be allowed to gain an advantage by exceeding the specified average speed.

15.5.1. The time based on this average is referred to as the stage Bogey Time.

15.5.2. No award can be made to Drivers who improve upon or equal the Bogey Time, or for the fastest time or least penalties on such a stage.

15.6. Competitors must not be started from any stage start at intervals of less than one minute, unless in accordance with the following procedures:

15.6.1. Starts of between 30 second and one minute interval are Permitted, provided no undue difficulties are foreseen and:

15.6.2. The stage has no split route and does not exceed a total length of four miles if on an unsealed or mixed surface, or eight miles if completely on a sealed surface.

15.6.3. The stage is neither a currently nor previously licensed Race, Speed or Kart venue, or an airfield (disused or otherwise) 15.6.4. No part of any stage traverses the same section of route during the running of that stage, or as part of another stage running concurrently. If the stage constitutes a continuous circuit, it must be less than one lap.

15.6.5. Competitors have been seeded by the Organisers by performance in accordance with 14.1.1 without dispensation.

15.6.6. That suitable timing arrangements have been made at the Finish line.

15.7. Authorisation for stages not covered in 15.6 above must be obtained in writing from Motorsport UK and will only be considered when the following information has been submitted:

15.7.1. The individual stage name, number and location.

15.7.2. The length of the stage and the type of surface (forest, tarmac, etc).

15.7.3. The average width of the road or track.

15.7.4. Diagram(s) of venues showing stage routes and safety provisions.

15.7.5. The number of times Competitors are attempting the stage.

15.7.6. If Competitors are attempting the stage more than once, the time interval between a Competitor's first and second run, and the possibility of catching previous Competitors.

15.7.7. Whether Competitors attempting their second run will be interposed with Competitors still attempting their first run.

15.7.8. Whether the stage has a split route, and if so how far this is into the stage. On unsealed surfaces the stage must not consist of more than 21/2 miles of common route.

15.7.9. Whether extreme weather conditions will adversely affect a fair Competition.

15.7.10. Confirmation that suitable timing arrangements have been made at the Finish Line.

16.1. Any access to any part of a stage, whether from a car park or through entrances, should be protected by warning notices as specified in D.31.1.1, D.31.1.5, and is subject to the requirements of D.32.1.

16.1.1. A copy of the Safety Code should be displayed at all entrances where the public are likely to enter, and in areas considered to be hazardous (including escape routes and prohibited areas).

16.2. On stages or events where it is intended to charge for admission, whether directly or by programme sales, specific Motorsport UK approval must be obtained prior to any publicity material being circulated (16.3).

16.2.1. Motorsport UK will not authorise any admission charge for spectators unless adequate safety precautions for them, appropriate to speed events, are in place.

16.2.2. Where the nature of a venue means it is impractical to apply such precautions, or access by the public cannot reasonably be controlled, then only a car park charge may be made for which no Motorsport UK approval is required.

16.3. For events with a published programme, or where information is published which gives details of the location of special stages, a copy of the Safety Code should be included for the guidance of spectators.

16.3.1. The organisation of special stages should seek to ensure the route is made as safe as possible, and unmistakable to Competitors and spectators alike.

16.3.2. Means of access onto the stage should be closed by sufficient barriers and signs to prevent any non-competing vehicle gaining access.

16.4. It should also be impossible for anyone on foot to get on to any stage through normal access roads or tracks without:

16.4.1. Being aware of it.

16.4.2. Having been seen by an Official.

16.4.3. Having seen a warning notice.

16.4.4. Having seen the Safety Code.

16.5. Fire extinguishers of a minimum 9kg total capacity, in units of not less than 6kg each, (20lb/9kg dry powder type) must be available in any area defined as 'Service Area' or 'Paddock' and any area in which competing cars are assembled awaiting their attempt at the stage(s), and at stage finishes.

Course Cars

16.6. The only category of Course Car that may be driven through a stage at near competitive speeds will be a Zero car, identified by carrying markings of 0, 00, or 000 as appropriate.

16.6.1. No other Official car can carry such markings.

16.6.2. Zero cars must be the last vehicles to traverse a stage before the first Competitor, unless the Clerk of the Course authorises otherwise.

16.6.3. Zero Cars must only stop on the course in the case of emergency and must be fitted with an effective method of communicating with the start control Officials.

16.6.4. With the exception of Class eligibility, Zero Cars must pass the same pre-event scrutiny as Competitors.

16.6.5. There must be only be two crew member in each car, and they must wear helmets and seat belts, and have fire extinguishers fitted, as is mandatory for Competitors.

16.6.6. Both crew members must be signed-on Officials. It is recommended that the Driver is a Competition Licence holder and that one of them has been involved in pre-event planning.

16.6.7. No Driver who is barred from holding a Competition Licence may drive an Official, Course or Zero car over a competitive safari course.

Special Stages: Arrows and Signs (11.9) (51.1)

17.1. The course for those parts of Hill Rally Special Stages which are run on defined tracks must be defined in accordance with 11.9. Where the route does not follow defined tracks, the special stage shall be marked as follows:

17.1.1. Pairs of arrows must be erected to form a gate; sufficient stakes should be used to ensure each arrow remains standing and indicating the correct direction.

17.1.2. The arrows must point in the direction that the stage continues after the gate.

17.1.3. Consecutive gates must be approximately 100 metres apart, or in sight of each other, allowing for the lower seating position of crews in non-production vehicles. They should be approximately 6 metres wide, but in soft ground where a choice of route may be given, they can be approximately 20 metres wide.

17.1.4. A single warning arrow must be positioned approximately 25 metres ahead of numbered locations (rather than intermediate gates) and changes of direction of over 45° indicating the direction to be followed at the location.

17.1.5. If there is any doubt about route direction, tape should be used to form a funnel in the correct direction, or to define the outside of a corner.

17.1.6. Where the course repeatedly changes direction without any natural features, tape staked at reasonable intervals should be used to define the course.

17.2. All roads and tracks used must appear on the Competitors' maps, or any tulip diagram supplied.

17.2.1. These should show junction or hazard numbers or letters, indicate the intermediate mileages between junctions, any danger spots and hazards, and the direction to be taken.

17.2.2. This diagram must be approved by Motorsport UK prior to the event.

17.3. Location numbers must be placed on the single warning arrow as required by 17.1.

17.3.1. Each digit must be black and measure 76.3mm high and 12.7mm thick.

17.3.2. They must be in a sans serif font on a white background a minimum of 147mm tall x 104mm wide (ie if there are two digits the background will be 208mm wide).

Multi-Use Hill Rallies

18.1. *The SRs for Multi-Use Hill Rallies must state whether the Public Highway is being used or not.

18.1.1. No stage route may be used more than twice.

18.1.2. For a stage route to be recognised as different, it must vary by at least 20% if run in the same direction, or for it to be reversed.

18.1.3. No part of a stage may be used in any one direction more than 12 times during any event.

18.2. Venues where spectators are encouraged to attend should have a resident Spectator Control Car equipped with a PA system and a radio on the frequency to be used at the event.

18.2.1. A co-driver who has signed-on must be carried in each competing car and no practising is allowed.

18.2.2. Fire extinguishers must be available in any area defined as a service area or paddock, and any area in which competing cars are assembled waiting their attempt at a stage.

18.2.3. Motorsport UK may appoint a Steward for any event, and will do so where an event is confined to one venue.

18.2.4. Written Motorsport UK permission must be obtained in advance in respect of any other activity being held at the time of the event at the venue, in order to ensure whether suitable insurance can be arranged.

18.2.5. PR work, in accordance with 4.1, must be undertaken irrespective of whether or not the public highway is used on the event.

18.2.6. The Clerk of the Course at a National or International Hill Rally must be licensed as in 1.1.11.

Service Areas

18.3. All Service Areas should be under the supervision of a Safety Officer with suitable means of contacting the Emergency Services.

18.3.1. Special care must be taken to ensure that the areas are kept secure from spectators and that all aspects of Health and Safety Regulations are observed.

18.3.2. Adequate fire extinguishers must be available at the site.

Emergency Vehicles

18.4. The equipment and licensing criteria for Rally emergency vehicles are listed in Section F.

18.4.1. These vehicles comprise Rally Recovery Units, Rally Rescue Units and Stage Safety Units (SSUs).

18.4.2. To maintain safety cover, unless licensed vehicles are available, SSUs should be able to provide rescue, first aid and fire fighting to incidents within 15 minutes (ie starting from the beginning of a stage and proceeding in the direction of the stage).

18.4.3. It is recommended that an SSU is stationed at each stage start.

Medical and Safety Cover

Multi-Use Hill Rallies

19.1. At each venue there must be:

19.1.1. A Doctor or Motorsport UK-registered paramedic.

19.1.2. An Motorsport UK-licensed Rally (or Dual) Rescue Unit.

19.1.3. A Recovery Unit.

19.2. The Chief Medical Officer or Chief Paramedic, being a Doctor or Motorsport UK Registered Paramedic, is responsible – in consultation with the Clerk of the Course and the Event Safety Officer – for ensuring that the required level of medical and rescue cover is provided.

19.2.1. Their responsibilities should include the detailed organisation of doctors, their planning and deployment within stages, the organisation of ambulance meeting points and the notification of hospitals in relation to the stages.

19.2.2. The Chief Medical Officer or Chief Paramedic, and Safety Officer, in liaison with Stage Commanders, should be aware of the evacuation routes from all stages and rendezvous points.

19.2.3. Following consultation with the Clerk of the Course, the Chief Medical Officer or Chief Paramedic, may appoint a suitable deputy to take over the Chief Medical Officer's or Chief Paramedic's, duties in an emergency.

Hill Rallies Other Than Multi-Use

19.3. For Clubman, Interclub and National Multi-Venue Hill Rallies, there must be at every stage (or group of stages of which a maximum three are Permitted in close proximity):

19.3.1. A doctor or Motorsport UK-registered paramedic.

19.3.2. An Motorsport UK-licensed Rally (or Dual) Rescue Unit.

19.3.3. In addition, those stages without the a Motorsport UK Rescue Unit may position an Motorsport UK-licensed SSU at the start.

19.4. For every stage in excess of nine miles in length, in addition to the above, there must be at a suitable mid-point:

19.4.1. A doctor or Motorsport UK-registered paramedic.

19.4.2. A Motorsport UK-licensed Rally (or Dual) Rescue Unit or a Motorsport UK-licensed SSU.

19.5. It is recommended that an Motorsport UK-licensed Recovery Unit, or a commercially operated Recovery Unit, is placed at or near those stage start locations where a Rescue Unit is positioned.

19.6. For International Hill Rallies (other than FIA Championships) there must be at every stage start:

19.6.1. A doctor or Motorsport UK-registered paramedic.

19.6.2. A Motorsport UK-licensed Rally (or Dual) Rescue Unit.

19.6.3. A Recovery Unit.

19.6.4. For stages in excess of nine miles in length, these requirements must be repeated at a suitable mid-point.

International and National Hill Rallies

19.7. It is recommended that the Chief Medical Officer is appointed from the Motorsport UK Register and approved for the grade of rally being run.

19.7.1. A senior Medical Officer should also be appointed for each stage and be positioned at the stage start to work under the instructions of the Stage Commander.

19.8. Doctors should carry sufficient equipment as they feel necessary for the performance of their duties. The following is suggested:

- Airways x2
- Cervical collar
- Two large field dressings
- Powerful hand torch
- Space blanket
- First aid kit.

19.9. It is recommended that Organisers have available a full resuscitation kit.

19.10. All accidents and incidents involving injury must be reported in writing by both the Medical Officer and Stage Commander to the Clerk of the Course. A completed Motorsport UK report form, signed by the Doctor should be sent to the Medical Consultant at Motorsport UK.

Cross Country Orienteering (54)

20.1. These events must be organised in accordance with 1-1.6 and the following:

20.1.1. There should be no merit attached to being the first to arrive at any point, nor should it be necessary to arrive at any point other than the Finish by a specified time.

20.1.2. If an overall speed limit is set for an event, it must be possible to win without exceeding an average speed of 10mph from Start to Finish. Participants must not be required to travel more than 50 miles, nor to perform any task or solve any problem that is likely to offend anybody not taking part in the event.

20.1.3. When running an Orienteering event at night careful consideration should be given to restricting auxiliary lights. R18.5 is strongly recommended.

Team Recovery (52)

21.1. Any Team Recovery event must be organised in accordance with 1-1.6 and the following:

21.1.1. The event must be on private ground. The use of the Public Highway, including Rights of Way, is forbidden.

21.1.2. Only vehicles within the same team may be on any observed section at the same time.

21.1.3. At each observed section, Official Recovery Teams must be on duty in the location specified by the Clerk of the Course.

21.1.4. Rescue vehicles must be positioned at predetermined locations to evacuate any injured party.

Point to Point (53)

22.1. Point to Point events must be organised in accordance with 1-1.6 and the following:

22.1.1. They must be on private property at one venue only. They can incorporate open ground, tracks or roads, and can include arduous or demanding areas, water courses and other natural obstacles or hazards,

22.1.2. The ground should be an open area and positive steps (including the closure of tracks) should be taken to prevent vehicles meeting at blind points,

22.1.3. Only vehicles from the same team may be in any point at the same time,

22.1.4. The event must be timed in accordance with the requirements of 11.4.

22.1.5. Rescue vehicles must be positioned at predetermined locations to evacuate any injured party.

22.1.6. Adequate Marshals must be positioned at each point to be visited, and at locations overlooking the areas that Competitors will cross.

Challenge Events (55)

23.1. Challenge Events must be organised in accordance with 1-4 and the following;

23.1.1. The aim of the event is to drive, tow and or winch a vehicle(s) to the various identified points within the competition site, the location of which will be indicated in the SRs.

23.1.2. At each location will be a means to prove that the vehicle has reached the location, this will be identified by a number to verify it is the desired objective and will be attached to a fixed point by a cable. A score card (or other device) (attached by the scrutineer in a consistent point on all vehicles) must be marked as proof that the location has been visited. The vehicle must negotiate close enough to mark the scorecard without detaching either component.

23.1.3. The SRs will specify whether the event is for single vehicles or teams of vehicles.

23.1.4. The SRs will specify whether there is a class structure and specify the eligibility requirements for classes.

23.1.5. The SRs will specify the start time, finish time and any penalty which will be applied for late finishing.

23.1.6. The SRs will specify any start order and the method arrived at for employing it.

23.1.7. The SRs will specify the values of each point visited or any formula which is used to calculate the value of each point visited.

23.1.8. In addition there may also be Special Tasks at certain locations which are worth extra points. These may take the form of driving, mental or physical tasks, these may involve the use of the competing vehicle or alternatively a vehicle may be provided for the task. Each task will be overseen by a marshal who will issue instructions and record the score.

23.1.9. The SRs will specify the number of Special Tasks available on the day and their maximum scoring potential.

23.1.10. Special Tasks may be timed to an accuracy of one second.

23.1.11. Where a winch cable or rope may be deployed the area of that section shall be no less than the length of the outstretched winch cable of rope and only competitors attempting the section and the observing official may be present in the Section. Where SRs require all competitors to use synthetic winch rope the width of this area may be reduced.

23.1.12. Winch cable and rope must be presented in a serviceable condition.

Cross Country Driving Tests (55.2)

23.2.1. These events must be organised in accordance with 7 and the following:

Driving Test Layouts

23.2.2. Cars must not be allowed to travel more than 25m (between manoeuvres) without having to stop astride a penalty line, reverse or drive clear of the line or manoeuvre in a garage or box.

23.2.3. Competitors must either stop astride a penalty line or make a change of direction of at least 90° at a distance of not more than 20m before the Finish line.

23.2.4. The route must be made available to all Drivers before any test.

23.2.5. The start and finish of all tests must be in a forward direction.

23.2.6. All tests must be arranged so that the whole of the course is visible to the Driver from the Start Line unless competitors are given the opportunity to walk the course beforehand.

23.2.7. There must be no optional direction of travel, except as specified in 55.3.8.

23.2.8. Clarification of where and how a change of direction may be made without incurring a penalty must be available on request to all Competitors before the start of any test.

23.2.9. Spin turns are not permitted.

23.2.10. Practising for tests is not permitted.

23.2.11. Markers should be not less than 1m in height, unless the Supplementary Regulations (SRs) or test instructions specify otherwise.

23.2.12. Lines and gates must have a minimum width of 3.5m.

23.2.13. Any 'garage' must have a minimum length of 6m and a minimum width of 3.5m.

23.2.14. When Competitors are required to perform a 180° turn in a box, the size of the box must be sufficient to contain a circle of 16m diameter.

23.2.15. Each test should be designed so that a Competitor is not expected to engage reverse gear more than four times (ignoring manoeuvres to correct mistakes).

23.2.16. Each test must be run at least twice.

23.2.17. Each Competitor's worst performance at each test will be discarded in arriving at total penalties for the event.

Competitors' Regulations: All Events

24.1. Any Competition Licence holder who Permits the unauthorised presence at any time of any vehicle on a known or former Cross Country Course, a Special Stage or on private property including land owned or managed by the Defence Infrastructure Organisation, Natural Resources Wales, Forestry and Land Scotland, the Forestry England or DAERA Forest Service NI will be disqualified from any related event and referred to the Motorsport UK National Court.

24.1.1. No verbal instruction to Competitors regarding routes, time schedules, layouts or performance in a stage or test or section issued during an event will be valid.

24.1.2. Any instruction relating to these matters must be displayed as an Official notice at least 30 minutes before the first car is due to start a Competition, or issued in writing to each Competitor who must acknowledge receipt by signing an appropriate form (D.11.1.1, G.11.2.2, 26).

24.1.3. At the start, each Competitor, Passenger and vehicle will be checked for eligibility.

24.1.4. Any Competitor not reporting as instructed may be fined, disqualified or may forfeit their starting position.

24.2. Drivers and passengers must produce a valid Club Membership Card and Competition Licence as detailed in Section H.

24.2.1. For any Cross Country event where Crash Helmets are required and irrespective of licence grade, drivers, navigators and passengers who have any notifiable condition included within H10.1.9. may not apply for their competition licence on the day and should allow a calendar month for their application to be assessed and processed.

24.3. Drivers at Hill Rallies, Competitive Safaris, Team Recovery, Point to Point, Challenge Events and all events crossing a public highway must hold a current valid RTA licence appropriate to the vehicle.

24.3.1. Drivers at Trials, Winch Recovery, Gymkhanas, Treasure Hunts and Orienteering must also hold a current valid RTA licence appropriate to the vehicle, but the SRs can Permit entries from Drivers who are 16 or over but who do not have a current valid RTA licence for the vehicle, provided their Passenger holds such a licence and is experienced in Cross Country Trials. Furthermore the SRs may permit drivers aged 15 or over where the competitor has finished four TYRO Trials and the vehicle is road legal. The SRs may permit drivers aged 15 or over in a special vehicle (44.1.3) where the driver has finished a further four Cross Country Trials in a road legal vehicle. Proof of finishing may be recorded on the Upgrade Card included elsewhere in this book or other suitable means.

24.3.2. Drivers at Timed Trials must hold a current valid RTA Licence appropriate to the vehicle, exceptionally the SRs may permit drivers aged 16 or over who do not hold a current valid RTA licence appropriate to the vehicle where the competitor has finished four Cross Country Trials.

24.4. The vehicle may only be driven between observed sections by a crew member holding a valid full RTA licence. For Tyro and Junior Trials see 44.1, 25.3 and 45.

24.5. At Hill Rallies both the Driver and Co-Driver or Navigator must produce a valid Competition Licence for those rallies specified in the current chart of Minimum Acceptable Licences as requiring a Competition Licence.

24.6. Upgrading Competition Licences. See H.17.

24.7. Vehicles competing in Cross Country events must comply with Technical Regulations 56 to 63 and J as appropriate.

24.7.1. *Vehicles may be divided into Classes as specified by the SRs.

The Crew

25.1. For Hill Rallies, and Competitive Safaris, all Competitors must wear approved Crash Helmets (K.10), FIA approved FHRs, clothing which covers the arms, legs and torso up to the neck, and unless a windscreen to 57.3.1.is fitted goggles or visors to protect the eyes.

For Timed Trials, Team Recoveries and Point to Point, all Competitors must wear approved Crash Helmets (K.10) clothing which covers the arms, legs and torso up to the neck, and unless a windscreen to 57.3.1.is fitted goggles or visors to protect the eyes.

Additionally competitors in Sports Utility Task Vehicles must wear an FIA approved FHR device, fitted in accordance with FIA regulations.

25.1.1. The wearing of flame resistant clothing and gloves is strongly recommended for all events including untimed events.

25.1.2. The SRs may require crash helmets to be worn in untimed events.

25.1.3. *Seat belts must be worn on all timed events, except Team and Winch Recovery, and are strongly recommended at all events.

25.1.4. Any means of identification fixed for the Competition must be removed when a Competitor retires, is disqualified, or completes the event.

25.1.5. Numbers (2.7.7, 36.4, 50.5.1).

25.2. The same Driver must drive throughout a Competition and except with Official approval, the people carried at the start of an event must not change during the event.

25.2.1. Only the nominated Driver and/or Co-Driver listed on the entry form can drive during a Competition, unless the SRs specify otherwise.

25.2.2. No person under 16 years of age can be carried in an open vehicle during an event and no one is permitted to ride other than in a proper seat.

25.2.3. No Driver may drive for more than 200 miles without rest or relief, either by halting the vehicles for at least one hour or by a change of Drivers (2.5.11).

25.2.4. No competing vehicle may carry more than one physically disabled person, whose participation must be authorised by H.12.

25.3. The minimum age for taking part in a Junior Trial is 8 years.

25.3.1. Competitors are not eligible for Junior Trials on or after their 18th birthday.

25.4. All Competitors must comply with H.7.

Competitors' Regulations: All Events Using the Highway and Hill Rallies

Route Details (33.4, 2.5.11)

26.1. The onus of following the correct route rests with the Competitor who must visit controls in the order set out in the Road Book or Route Card, unless otherwise specified.

26.1.1. A control is considered to extend for 50m around the actual point at which Officials are located, unless clearly visible signs are displayed to define a different area.

26.1.2. The direction of approach to or departure from a control can be specified.

26.1.3. Non-compliance with 25.1.2 requirement by passing a control travelling in the wrong direction, or visiting a control or check more than once, may involve a penalty.

26.1.4. No private road track can be used by Competitors unless specific permission is given in the Road Book or Route Card.

26.1.5. Officials must be on duty at all controls (2.9.4).

26.1.6. If Officials are not present at a control during the whole period when Competitors are due to report, all performances at that control point will be ignored in compiling the results (except as provided for in 2.7.4).

26.1.7. All performances will also be ignored if a control is not sited at the location specified in Official documents.

26.1.8. The onus of ensuring all the required information is clearly and legibly recorded at the appropriate time and place rests with the Competitor (2.9.3).

26.1.9. Should any entry on a Time Card not be legible or not appear authentic, it may be ignored.

26.1.10. Organisers can refer to Marshals' check sheets in case of doubt.

26.1.11. If there is a discrepancy between the time allowance shown by Organisers on the Time Cards and that shown on any other document, the Time Card will be taken to be correct, unless previously amended in an Official bulletin.

26.1.12. It is an offence for any Competitor to proceed or continue in an event until the information required by 2.5.11 is provided.

Rights and Duties of the Organisers

(D.25.1, H.31.1.1, 51.4)

27.1. Judges may be appointed to adjudicate on:

27.1.1. Failure to stop at Stop or Give Way signs.

27.1.2. Failure to comply with 51.

27.1.3. False starts on stage, test or standard sections.

27.1.4. Unauthorised use of auxiliary lights.

27.1.5. Unauthorised possession of recorded notes, radio equipment or intercoms (36.1, 50.3, 51.4).

27.1.6. Unauthorised servicing.

27.1.7. Unauthorised smoking.

27.1.8. Excessive sound (measured by meter) (J.5.17).

27.1.9. Violation of out of bounds areas.

27.1.10. Violation of crash helmet or seat belt regulations.

27.2. Driving Standards Observers (G.11.1 to 11.2) may be appointed to adjudicate on:

27.2.1. Excessive vehicle sound (observed during the event).

27.2.2. Excessive speed.

27.2.3. Driving in a manner likely to bring motor sport into disrepute.

27.3. Any Competitor driving at an excessive speed, in a reckless manner or in a manner likely to bring motor sport into disrepute, or convicted of any driving offence committed during an event, may be disqualified.

27.4. Checks manned by Judges or DSOs need not be manned for the whole period during which Competitors may report, and may operate on a random basis.

27.4.1. The Official in charge of any control or check may mark or withhold a Competitor's road book, route card or time card if the car concerned has suffered damage to its exhaust system.

27.4.2. *The Organisers may establish a control at any point for the purpose of observing maintenance of a set speed, time schedule or route, provided that the intention to do so is stated in the SRs and Competitors are given all the necessary information for them to comply with the requirements which are to be observed (2.7).

27.4.3. After a Competition has started, Organisers will not accept any claim from Competitors in respect of Force Majeure or baulking (14.6). Despite this, the Clerk of the Course has the right to disqualify any Competitor proven to have unreasonably baulked another.

27.4.4. All Timekeepers will be Judges in respect of time recorded.

Finish – Events Using the Public Highway

28.1. To be classified as a finisher, a Competitor must report to at least two-thirds of the controls listed in the Road Book or Route Card and report to the final control within the maximum lateness specified, with the car in which he started, unless otherwise stated in the SRs.

28.1.1. (28.1) Competitors at the conclusion of their Competition shall sign a declaration form to the effect that they have not been involved in any incident that may have caused damage to persons or property, or alternatively give details of such incident. Failure to comply will be penalised in accordance with 30.1.2(v) or 30.1.1(t) and may be reported to Motorsport UK for further disciplinary action.

28.1.2. Competitors who retire will be required to submit this form to the Secretary of the Meeting within 72 hours of the event.

28.1.3. Failure to return this form may be penalised by a fine of up to £100.

Results – Events Using the Public Highway

29.1. Competitors start with zero marks and classification is based on Competitors who have incurred the least number of marks. Competitors who have incurred an equal number of marks will be classified by reference to total marks lost (30.1.1, 30.1.2).

29.1.1. In the event of a tie, the Competitor who has completed the greater portion of the Competition from the Start (including any tests) without penalty will win.

29.1.2. If both incurred a penalty at the same point, the Competitor with the lesser penalty will be the winner, unless another method of resolving ties is specified in the SRs.

29.2. Damage in relation to 30.1.1(r) or 30.1.2(t) will be considered as being any tear or any indentation exceeding two inches in depth occurring to the external surfaces of the coachwork or accessories (excluding wind-screen, windows, lamps and bumpers) above the horizontal plane of the road wheel centre.

Timing – Events Using the Public Highway

30.1. A Competition must be timed by one of the following methods, which must be stated in the SRs.

30.1.1. Target Timing.

30.1.2. Schedule Timing.

***Target Timing Definitions**

31.1. *Target Time* is the time specified to cover the distance between two consecutive controls.

31.1.1. A Competitor can calculate his Due Time of Arrival at any Time Control by adding the Target Time for the section to his actual time of departure from the preceding Time Control.

31.1.2. When Target Time is used, each period of time must be treated individually and no penalties incurred will apply to any subsequent section.

31.1.3. Lateness taken over Target Time on Road Sections and Special Stages is cumulative and cannot be reduced.

31.2. *Bogey Time* is the time specified for a Competitor to complete a Special Stage without incurring penalty and must comply with 3.11 to 3.12, 11.3.2.

31.3. *Stage Maximum Time* is the maximum time penalty that can be applied on a Special Stage and will be the Target Time for the Special Stage. It must be stated on the Time Card.

31.4. *Cumulative Lateness* is the sum of times in excess of Target Time taken over each section, and once lost cannot be regained.

31.5. *Maximum Permitted Lateness* is the amount of cumulative lateness which if exceeded from the previous Main Control will result in the Competitor being deemed to have retired.

31.5.1. This amount will be 30 minutes (unless the SRs specify a different period).

31.6. *Penalty-Free Cumulative Lateness:* the SRs must specify the amount of cumulative lateness allowed free of penalty before a Competitor is penalised.

31.7. *Dead Time* is that authorised between booking in at the end of one Target-timed section and the commencement of the next section, where that time is spent entirely within a control zone.

31.7.1. Dead time has no effect on penalties or cumulative lateness incurred elsewhere.

31.8. *Delay Allowance* is a penalty-free allowance granted by an authorised Official to specific Competitors following a delay, and extends the Target Time for those Competitors on that section only.

31.8.1. Any delay allowance must be recorded in writing on a Competitor's time card by the Official.

31.9. *A Main Control* is situated at the Start and Finish of a Rally, immediately before and after any Rest Halt, and at any other specified point.

31.9.1. At a Main Control after a Rest Halt, Competitors will (unless the SRs specify otherwise) restart at one minute intervals.

31.9.2. They do so by one of the following methods, which must be specified in an Official Instruction:

(a) In number order

(b) In the order of their arrival at the Main Control preceding the Rest Halt

(c) In the order of their arrival at some other preceding control, or

(d) In the order of General Classification at a specified point if interim results are available.

31.9.3. Each Competitor must be given a due starting time from any Main Control (Out), and any difference between this time and the Competitor's actual starting time will be counted towards cumulative lateness and a Time Penalty applied (unless the SRs specify otherwise).

31.10. *Re-grouping Controls:* the Road Book or Route Card can specify any controls that relate to Competitors who are considered to have retired through having accumulated more than the maximum Permitted lateness at a control.

31.10.1. These Competitors commence the next section with zero lateness towards disqualification.

31.11. In a *Special Stage Arrival Control*, a Competitor proceeds to the Special Stage Start immediately after checking in to the Special Stage Arrival control. The area between the Special Stage Arrival Control and the Stage Start must be Parc Fermé.

31.12. Similarly in a Special Stage Finish Control, a Competitor receives a Special Stage Finish Time in hours, minutes and seconds at the Special Stage Finish Control. This time (in hours and minutes) is used as the start time for the next section (unless the SRs specify otherwise).

31.13. Competitors will receive penalties on Special Stages as follows (unless the SRs specify otherwise):

Under Bogey Bogey Time

Over Bogey under Target Actual Time taken

Over Target Target Time.

Scheduled Timing Definitions

32.1. *Standard Time* is the time of day a notional Competitor number zero would be due at any control or check.

32.2. *Scheduled Time* is the actual time each Competitor is required to be at any specific point and can be calculated for any point by adding that Competitor's Competition number, multiplied by the time interval between Competitors at the Start, to the standard time at that point.

32.3. *Delay Allowance* is a penalty-free allowance granted by an authorised Official to specific Competitors following a delay.

32.3.1. It must be recorded in writing on the Competitor's time card by the Official.

32.4. *Due Time* is the time a Competitor is due at any control or check, inclusive of any previous lateness.

32.5. *Penalised Time* is the difference between Due Time and an earlier or later arrival time.

32.6. *Penalty Free Lateness* allows a Competitor late at one control to be an equivalent amount late at the next control without incurring further penalty.

32.7. *Maximum Time* is the latest time a Competitor can arrive at a control or check without incurring further penalty.

32.8. *Outside Total Lateness (OTL)* is the point where a Competitor is considered not to have visited the control or check by virtue of the fact that they are more than 30 minutes past their Scheduled Time (including any delay allowance).

32.8.1. The SRs can specify a different period.

33.1. Organisers may require any Competitor who is late to reduce their lateness by either foregoing or reducing any period provided for remaining at a control or Official halt. Competitors may themselves reduce lateness without penalty in the following ways (providing the Section is not defined as Neutral (3.4 and 3.5) and unless forbidden to do so by the SRs or by breaching 33.4):

33.1.1. When Target Times are used, by traversing the distance between any two or more points in a time less than the Target Time, so long as they do not report at a control or check before the original Scheduled Time.

33.1.2. By reporting at any control or check following one at which a penalty was applied for lateness at any time not earlier than Scheduled Time.

33.1.3. A Competitor on any Rally without Special Stages who wishes may miss a Control or Controls. They will be penalised in accordance with 30.1.2(a) or 30.1.1(a) for every control missed. If they rejoin the route at a control at the end of Standard section, they will be Permitted to restart without further penalty at any time between their original Scheduled Time and their Maximum Permitted Lateness in relation to their original Scheduled Time. If rejoining control at the end of a Neutral section, they will only be Permitted to restart without further penalty at their Official Corrected Time based on the time of arrival at the last control at which they reported.

33.2. If the need arises for an Organiser to extend Maximum Permitted Lateness, this can only be done at a point on the route at which Competitors are required to report to avoid disqualification.

33.2.1. Maximum Permitted Lateness can then only be extended for the following part of the route and cannot be applied retrospectively for earlier sections.

33.2.2. These provisions are subject to Standard Condition 4 of the Motor Vehicles (Competitions and Trials) Regulations where they apply.

33.3. No penalty free lateness or Official delay allowance which has been either reduced or foregone as Permitted by 33.1 can be reclaimed.

33.3.1. This does not exclude fresh claims based on new circumstances.

33.4. A Competitor found to have traversed a distance greater than four miles between two consecutive time controls in less than three-quarters of the time specified by the Official time schedule will be penalised in accordance with 33.1, unless competing on a special stage. In calculating such a penalty, any fraction of a minute will be ignored. Thus:

33.4.1. In a nine minute section a penalty is imposed if a Competitor completes the section in less than six minutes.

33.4.2. In a 10 minute section – seven minutes.

33.4.3. In an 11 minute section – eight minutes.

33.4.4. In a 12 minute section – nine minutes.

34.1. Any timing to less than one minute will be recorded on equipment as detailed in 2.13.

34.1.1. Competitors will be timed by the Official timepieces in the charge of Officials, unless the SRs state that watches carried by the Competitors can be used.

34.1.2. *If Competitor's own watches are used, they must be of a size and type to enable the dial to be read and must be sealed.

34.1.3. The requirements for sealing watches must be stated in the SRs.

34.1.4. The promoters may reject any watch which cannot be satisfactorily sealed or read.

34.1.5. If any sealed watch varies from Official time by more than one minute, the Competitor concerned will be timed by Official clocks from then, unless the SRs make provision for the replacement or re-setting of the watch concerned.

Controls – All Events using the Public Highway and Hill Rallies (2.4 to 2.6, 26)

35.1. Controls, checks and test sites must open 30 minutes before the due time of arrival of the first car, and close 30 minutes after the due time of arrival of the last car, unless the SRs specify otherwise.

35.1.1. The time of arrival at or departure from a control, other than intermediate and final controls of Regularity Sections (where 33.1 applies), will be the time at which the Road Book or Time Card is presented by the Competitor concerned, providing all crew members and the car are within the control area.

35.2. Exceptions to this are:

35.2.1. In the event of a competing car obstructing other Competitors through being halted or unduly slow near a control, Officials may instruct the Driver to proceed and may then record the time as the time when this instruction is given.

35.2.2. In the event of a Competitor presenting a Time Card to Officials at a time when the car is outside the control area, the Officials may or may not make a record on the Time Card at their discretion.

35.2.3. At Special Stage Arrival Controls, no penalty will be incurred if the car enters the control area as follows:

(a) On a Target Timed event, the car may enter during the sixty seconds immediately preceding the target check-in minute, or during the check-in minute. (For example: a car has left the previous Stage Finish at 11.04.40 on a section for which the target time is nine minutes. It is therefore due at the next Time Control at 11.13. The car arrives at the yellow advance Control Board at 11.08, stopping before the yellow board. The car is Permitted to enter the control zone at any time after 11.12.00. The Time Card may be handed in at any time between 11.13.00 and 11.13.59, and a time of 11.13 will be recorded. This procedure will incur no penalty.)

(b) On a scheduled time event, the car may enter the control zone during the sixty seconds immediately preceding the due time minute, or during the due time minute. The procedure to be followed is identical to that for a target timed event from the point of arrival at the yellow control board to the actual check in time.

35.3. The responsibility of establishing the correct Due Time rests solely with the Competitor, as does the onus of presenting the Time Card.

35.3.1. The time of reporting at controls will be recorded to the preceding whole minute when penalties are imposed per minute (eg 09 minutes 59 seconds will be recorded as 09 minutes).

35.3.2. When a penalty is imposed for a timekeeping error of less than one minute, the time will be recorded to the preceding second.

35.3.3. Where a control at the end of a section timed to the second also forms the start of a section timed to the minute, the time of departure will be considered as being the same as arrival, but ignoring any seconds.

All Events except Hill Rallies Using the Public Highway (2.9)

36.1. Competitors must not carry any form of Intercom (ie any method of voice amplification) or any radio transmitting device. Penalties are specified in 30.1.2(u) or 30.1.1(s).

36.1.1. Exceptionally, mobile telephones are Permitted if the SRs specifically allow them.

36.1.2. No regular assistance organised in advance may be used by Competitors.

36.2. Competitors must stop before entering any road protected by a Stop or Give Way sign. Failure to do so will be penalised as in 30.1.2(v) or 30.1.1(t) (4.3.1).

36.2.1. Exceptionally, with the specific permission of the RLO, Give Way signs in Quiet Zones may be negotiated in accordance with the Highway Code.

36.2.2. Any such junctions must be advised to Competitors in advance.

36.3. Only 1:50,000 scale OS maps may be used. The only information which can be added to these maps as sold is:

36.3.1. Highlighting numbers, words and legends printed on the map within the outer printed grid numbers.

36.3.2. Highlighting and repeating grid lines and numbers, and marking adjacent map numbers outside the area defined above.

36.3.3. Including information provided by the event Organisers.

36.4. If required by the Organisers, Rally plates must be displayed at the rear of the car and on, or just below, the rear side window (3.4.1, 2.7).

36.4.1. Competitors are strongly recommended to carry a First Aid Kit.

Regularity Sections (3.6)

37.1. Timing will be at the moment of entering the control area. The SRs will specify:

37.1.1. Whether Competitors need to stop and present Time Cards at intermediate controls.

37.1.2. *The penalties for stopping within sight of any control.

37.1.3. *The penalties for early or late arrival at any control on a Regularity Section.

Route Checks

38.1. These unmanned checks prove a Competitor's stays on the correct route.

38.1.1. Proof of passage will involves recording the symbols from a Code Board which must be placed facing oncoming Rally cars.

38.1.2. The Code Board will at least 315 sq cm and show a maximum five black numbers or letters (or a combination of both up to a maximum of seven) on a contrasting background.

38.1.3. The letters/numbers must be at least three inches high (7.63 cm) with a minimum of 1/2 inch (1.27 cm) stroke width.

Passage Controls

39.1. Manned Passage Controls also prove a Competitor's adherence to the correct route.

39.1.1. Passage Controls cannot be located less than 500m from any other manned control.

39.1.2. The only requirement for a Competitor is to have the Marshal's signature recorded.

Time Controls

40.1. Time Controls are manned points established to record the time of a Competitor who must come to a stop for the purpose.

40.1.1. It can additionally record the direction of the Competitor's approach and departure.

40.1.2. The only other information Permitted to be recorded by the Marshal is the authentication of the records held by the Competitor.

40.1.3. These records, to be valid, must be signed by the Marshal with the Competitor not being required to make any entry on the time card.

40.1.4. An example of all Official boards must be on display at documentation for the event.

Competitors' Regulations: Trials and Un-Timed Events

Cross Country Vehicle Trials (5)

41.1. These must be organised in accordance with paragraphs 24 to 40 as appropriate.

41.1.1. *The SRs may allow the vehicle crew to be varied during the event and may specify the minimum tyre pressure permitted for the Competition.

41.1.2. Only one Passenger aged 16 or over may be carried on a vehicle during Observed Sections.

41.1.3. Exceptionally, the SRs may reduce this minimum age to 14, providing the vehicle is fitted with seat belts and either a manufacturer's hard top, a truck cab, or a rollbar, or where the vehicle is a road legal, mass produced, production vehicle retaining the original hardtop or truck cab and where the seat belts comply with K2.1.1, the SRs may further reduce the minimum age of the passenger to 12.

41.1.4. The Passenger must remain properly seated alongside the Driver throughout all Observed Sections.

41.1.5. 'Bouncing' will be Permitted only within the confines of the seating compartment, and then only so long as no portion of either the Driver's or Passenger's body (other than arms and hands) is placed outside the sides of the vehicle or behind the seat they are occupying.

Numbers

41.2. Numbers will be allotted by ballot.

41.2.1. Numbered Results Cards will be issued at the Start and must be presented by the crew to Officials.

41.2.3. Competition numbers must be displayed on both sides of all competing vehicles, except for Trials when the SRs may relax this requirement.

41.2.4. Competitors will start in numerical order, and the Organisers shall determine the order of running at each observed section.

41.2.5. Competition Numbers or Number Cards must be removed at the Finish or if a Competitor retires.

Observed Sections and Route

42.1. The onus of following the correct route rests with the Competitor.

42.1.1. Any signs displayed, other than in an Observed Section, are designed to assist Competitors and have no mandatory authority, unless the SRs specify otherwise.

42.1.2. Competitors will drive from point to point with as little delay as possible, and any Competitor suspected of loitering can be ordered to proceed by an Official.

42.1.3. Competitors arriving at an Observed Section more than 20 minutes after the preceding Competitor may be refused permission to attempt that section.

42.2.1. *Competitors should attempt to negotiate Observed Sections without stopping.

42.2.2. Organisers may, however, allow certain vehicles, by virtue of their size, to take a specified number of changes of direction on any particular section.

42.2.3. The permission to change direction and the eligibility of vehicles to do so must be specified in the SRs or Final Instructions (see Appendix 1, drawing number 204).

42.3. Failure of a vehicle to maintain unassisted forward motion in the direction of the course will be regarded as failure to comply with the requirements to proceed non-stop, unless the Judges are satisfied that a Permitted change of direction is intended, or the Organisers have ruled that more than one attempt may be made.

42.3.1. The point of failure will be at a vertical line from the centre of the hub of the front wheel which is the farther from the start of the section.

42.3.2. The beginning of any Observed Section will be marked by signs and its boundaries by markers or natural obstacles.

42.3.3. Natural obstacles must not be used as penalty markers.

42.4.1. Before attempting an Observed Section, a vehicle must be brought to rest with a leading wheel hub centre vertically over the Start line, as indicated by Officials.

42.4.2. The Driver must not proceed until instructed to do so.

42.4.3. If an Observed Section is divided into Sub- Sections, signs must indicate the beginning and end of each Sub-Section.

42.4.4. A vehicle will be considered to have entered an Observed Section or Sub-Section when the leading wheel hub centre has passed the marker(s) indicating the beginning of the section.

42.4.5. A vehicle will be considered to have left an Observed Section or Sub-Section when the leading wheel hub centre is past the marker(s) indicating the end of the section, provided that no prior penalties have been incurred.

42.4.6. *Failure in a lower or earlier Sub-Section will constitute failure in all succeeding Sub-Sections.

42.5. The Start line will indicate the greatest penalty and the Finish line the zero penalty. The SRs will specify the methods of scoring and application of penalties.

42.5.1. A Competitor will be deemed to have failed to negotiate an Observed Section non-stop if:

42.5.2. Any part of the vehicle touches a penalty marker, and/or

42.5.3. All wheels cross the boundary of the course as defined by the Clerk of the Course.

42.6.1. The point of failure will be deemed to be that at which the first penalty marker is touched, or the point at which the course boundary is first crossed by all wheels of the competing vehicle.

42.6.2. Should this point of failure coincide with the division between two Sub- Sections, the marks lost will be those on the Sub-Section recording the greater penalty.

42.7.1. Performances on any Observed Section may be ignored at the Organisers' discretion, even though there have been successful attempts to negotiate the section.

42.7.2. If this discretion is exercised, no performance on the section in question must be taken into account when compiling the results.

42.8. No unauthorised assistance is allowed and vehicles must complete the course under their own power. No case of force majeure will be taken into consideration.

42.9. At the Organisers' discretion, a minority of the Observed Sections may be timed, if provided for in the SRs. The following conditions will apply:

42.9.1. Only those sections which the Organisers anticipate will be completed without penalty by the majority of Competitors may be timed.

42.9.2. Any such timed section must be less that 200m long.

42.9.3. No Sub-Sections of an arduous or demanding nature can be used.

42.9.4. The maximum time allowed for each timed section must be stated in the Official Instructions prior to the commencement of the test.

42.9.5. The maximum time allowed for each timed section must not require any Competitor to exceed 15mph or 30 seconds per 200m.

Results – Trials

43.1. Any penalties incurred on a timed section must be calculated by reference to the following formulae, unless the SRs specify otherwise.

43.1.1. For failing to proceed non-stop. Where the 12* failure will decrease in proportion to the number of Sub-Sections negotiated non-stop.

43.1.2. For successfully negotiating the section 0 within the time allowed.

43.1.3. *Plus the highest penalty incurred by any Competitor making an attempt correctly.

43.2. For negotiating the section non-stop in excess of the time allowed the following formula is used:

Time taken x 100 – 100 = Time allowed Penalties

Penalty points		*Penalty points*	
0.0 – 8.3	1	50.1 – 58.3	7
8.4 – 16.6	2	58.4 – 66.6	8
16.7 – 25.0	3	66.7 – 75.0	9
25.1 – 33.2	4	75.1 – 83.3	10
33.3 – 41.6	5	83.4 – 91.6	11
41.7 – 50.0	6	91.7 – 100.0	12
		100.0 & above	12

43.3. Competitors will start with zero marks. To be classified as a finisher, a Competitor must have attempted at least three quarters of the total number of Observed Sections and arrive at the Finish within 20 minutes of the preceding vehicle.

43.3.1. The Competitor incurring the lowest marks will be the winner, and so on.

43.3.2. Ties will be resolved at the Organisers' discretion, unless the SRs state otherwise.

43.3.3. Each Competitor will be provided with a Results Card which must be produced on demand for Officials to mark at each section, unless the SRs specify an alternative method.

43.4. Penalty marks will be incurred as follows, unless the Marks Lost indicated below are modified by the SRs:

Penalty	*Marks Lost*
Each minute late reporting at the Start or a re-Start	5
Failure in an Observed Section (where an Observed Section is divided into	12
Sub-Sections the penalty for failure will decrease in proportion to the number of Sub-Sections negotiated non-stop)	
Not attempting or being ready to attempt an Observed Section or Sub-Sections when instructed to do so	12*
Not complying with a reasonable instruction by an Official for which a penalty is not otherwise stipulated, and provided warning of penalty is given	12*
Driver and/or Passenger not seated in accordance with 41.1.4	12
Running with tyre pressures lower than that required by SRs	50

*Plus the lowest total penalty incurred by any Competitor making an attempt correctly.

Tyro Trial (7)

44.1. Tyro Trial Drivers must hold a valid RTA licence (not provisional) for vehicles with more than three wheels and produce a valid Club membership card.

44.1.1. The SRs may Permit entries from Drivers who are 13 or over without a full RTA Licence, provided that their Passenger has experience of Cross Country
Trials and holds a full RTA Licence for the vehicle entered.

44.1.2. The vehicle may only be driven between observed sections by a crew member who holds a valid full RTA Licence.

44.1.3. Vehicles not complying with 62 must be fitted with a standard manufacturer's hardtop, truck cab or a roll bar to Section K, Appendix 2, drawing 1, and the SRs may permit entries to be accepted in respect of drivers who are 15 or over without a full RTA licence provided that the passenger holds a full RTA licence valid for the vehicle concerned and is a person who has experience of Cross Country Trials.

44.2.1. More than one Passenger may be carried where the Driver holds a valid full RTA Licence.

44.2.2. Passengers under the age of 18 will not be considered as Competitors for the purpose of Club membership. Passengers aged between 2 and 12 years old will be signed on by their parent or guardian.

44.2.3. All passengers must be properly seated with their seat back in an upright position and the seat adequately fixed.

44.2.4. All occupants must wear an approved seat belt at all times and all passengers must be seated in forward facing seats. Their seat back must be upright and they must face forwards.

44.2.5. The passenger sitting alongside the Driver during sections must be at least 12 years.

44.2.6. Passengers who occupy the rear seats of the vehicle must not be less than 2 years of age, any child under 12 years of age or 135cm in height must be seated using an approved 'child restraint'.

Junior Trial

45.1. Junior Trials must be organised in accordance with 24 to 35, 27.1, 28.1, 42 to 43.

45.1.1. At all times during a Junior Trials event vehicles may only be driven under the instruction of an Official.

45.1.2. There are three Classes of Trial: Novice, Intermediate and Expert.

45.1.3. Competitors must finish four Novice Junior Trials before being eligible for Intermediate Junior Trials, and four Intermediate Junior Trials before entering Expert Junior Trials.

45.1.4. Proof of finishing a Junior Trial will be by the signing of a Competitor's Competition Licence by the Clerk of the Course.

45.2.1. Sections for the different Classes may either be set out separately or so that a section increases in severity with separate finishing points for the respective Classes.

45.2.2. Fiddle brakes may only be used by Competitors in the Expert Class. If fitted to vehicles entered in Novice or Intermediate Classes they must be rendered inoperative.

Winch Recovery (8)

46.1. The following regulations are additional to and take precedence over 24 to 35.

46.1.1. Details of the course, the manner of recovery, the maximum time for completion and the method of starting will be given at the Start.

46.1.2. Competitors will be allowed to examine the course prior to the start.

46.2.1. *The SRs will specify the number of vehicles and members in a team.

46.2.2. No more than three members will be allowed in each team which must nominate a Captain to be responsible for keeping any score-card issued and represent the team to the Clerk of the Course.

46.3.1. *At the Start and Finish, all team members must be correctly seated in their vehicle and all equipment must be in or on the vehicle.

46.3.2. Each team will be allowed a minimum of two attempts at the course.

46.3.3. The team completing the course with the least penalties as stated in the SRs will be the winner.

46.4.1. The Clerk of the Course may penalise or stop a team if it is considered their mode of recovery is likely to be dangerous to Officials, Competitors, spectators or natural terrain.

46.4.2. The Clerk can also award penalties for touching gates.

46.4.3. Once a winch vehicle and anchor vehicle have been manoeuvred into position, they must remain stationary whilst winching.

46.4.4. Natural anchorage points may be used, but must be protected from damage.

46.4.5. It is strongly recommended that all members of the team wear protective clothing during winching operations, ie overalls, gloves, eye protectors.

46.4.6. It is strongly recommended that competitors, other than the winch operator, should also wear a crash helmet to Motorsport UK specification.

46.4.7. All equipment, including cables, ropes, straps or webbing, shackles, blocks, hooks, ground anchors, winches, etc and vehicles must be presented to, and approved by, the Scrutineer prior to an event.

46.4.8. The Organisers may supply certain equipment.

Promotional Events (9)

47.1. Drivers must hold a valid RTA Licence (not provisional) in respect of vehicles having more than three wheels.

47.1.1. The SRs may Permit entries from Drivers who are at least 16 without a full RTA Licence, provided the Passenger holds a valid full RTA Licence and has experience in Cross Country Trials.

47.1.2. The vehicle may only be driven between Observed Sections by a crew member who holds a valid full RTA Licence.

47.2.1. All Drivers must produce a valid Club membership card.

47.2.2. More than one Passenger may be carried where the Driver holds a valid full RTA Licence.

47.2.3. Passengers under the age of 18 will not be considered Competitors for the purpose of Club membership.

47.2.4. Passengers aged between 2 and 12 years old will be signed on by their parent or guardian.

47.3.1. All Passengers must be properly seated with the seat back in the upright position and with the seat adequately fixed.

47.3.2. All occupants must wear an approved seat belt at all times.

47.3.3. The passenger sitting along side the driver in sections must be at least 14 years of age.

47.3.4. Passengers who occupy the rear seats of the Vehicle must not be less than 2 years of age, any child under 12 years of age or 135cm in height must be seated using an approved 'child restraint'.

47.3.5. Passengers may not be carried for hire or reward.

Competitors' Regulations: All Timed Events

Cross Country Vehicle Timed Trials (10)

48.1. The following regulations are additional to and taking precedence over paragraphs 24 to 35, 27.1, 28.1 and 41 to 43:

48.2. Penalties will be in accordance with the following:

48.2.1. For each second over the Target Time: 1 mark per second.

48.2.2. For failing to satisfactorily negotiate an Observed Section within the maximum time allowed: 1 mark per second of maximum time allowed.

48.2.3. The SRs may specify additional penalties based on a specified number of marks per second.

48.3.1. Failure of a vehicle to maintain unassisted forward motion in the direction of the course will not be regarded as failure to comply with the requirements to proceed non-stop.

48.3.2. Further attempts to regain forward motion will be Permitted until the maximum time allowed for the section has elapsed.

Competitive Safaris (11)

49.1. These regulations are additional to and take precedence over paragraphs 24 to 35, 27.1, 28.1 and 41 to 43.

49.1.1. *The SRs may Permit two separate Drivers to drive one vehicle under one entry. In such cases their total combined penalties will be added together as if they were one Competitor.

49.1.2. Vehicles may carry one passenger, minimum age 16, in addition to the Driver, who must be seated in accordance with the provisions of 41.1.5.

49.2. It is recommended that crew are identified by suitable means, eg a rubber stamp or a plastic wrist identity tag, which must be issued at signing-on.

49.2.1. This must not be re-usable and must not cause discomfort.

49.2.2. For safety reasons it must be worn under clothing.

49.2.3. Each Competitor must be allowed to choose to which limb the identity mark is applied.

49.2.4. Competitors will be required to show the identity marking to Officials in the assembly area prior to the Start line.

49.3. (J.4) Competition numbers must be displayed on both sides of each vehicle, either on the front doors or behind them above the vehicle waistline and parallel to the vehicle sides.

49.3.1. Where the SRs require numbers to be displayed at the front or rear of a vehicle, they must be a minimum 100mm in height.

49.4.1. Competitors will be advised of the minimum and maximum time allowed for the course, before the Start.

49.4.2. The course should have a clearly marked route so that no navigation is required, and all course markings should comply with the provisions of 11.9 to 11.14.

49.4.3. Practising will not be allowed over the course, unless the SRs state otherwise. If Permitted, the SRs must specify the number of practice runs and the times of any practice periods (11.8.3).

49.5. The SRs must also specify:

49.5.1. *The number of competitive runs.

49.5.2. *The time interval between vehicles leaving the Start line, and whether the Organisers may hold Competitors en route in the event of the course becoming blocked. In such instances allowance will be made for the time Competitors are delayed.

49.5.3. *The method by which Competitors are signalled to stop and whether re-runs will be Permitted.

49.5.4. *The starting signal and method of timing to be used.

49.6. *Competitors will be required to proceed over the course in the shortest possible time.

49.6.1. The SRs will specify whether Live Recovery will be operated by Specialist Recovery Vehicles (SRVs) at the event.

49.6.2. These should be positioned at points where Competitors are likely to make involuntary stops.

49.6.3. The SRs will specify the maximum time allowed to Competitors for self recovery, after which they must take Official recovery.

49.6.4. No recovery operations organised by the Competitor in advance may be used.

49.6.5. At events where Live Recovery is operated, the Clerk of the Course must advise Competitors of the procedures at the Drivers Briefing.

49.6.6. The Clerk of the Course must specify whether the SRVs will be manned by a third crew member responsible for attaching the tow rope, or whether this will be carried out by the passenger or navigator. In the former case, Competitors must remain in the vehicle and follow the instructions from the SRV crew. In the latter case, the passenger or navigator must alight from the stranded vehicle and follow the following procedure:

(a) They must stand clear and await instruction from the first crew SRV member before attaching the tow rope between the vehicles

(b) When properly attached to the towing points, they must stand clear and indicate to the first SRV crew member that Live Recovery may start

(c) Once the stranded vehicle has been recovered, and only after the first SRV crew member has indicated that it is safe to do, they can detach the tow rope and stow it safely. They should then inform the first SRV crew member that the course or stage can be cleared

(d) The Driver of the recovered vehicle must not proceed until the Passenger or Navigator involved is properly seated and belted in. Failure to comply will be penalised by disqualification.

49.6.7. When arriving at a point on the course or stage where a Yellow Flag is being displayed, the Competitor must not pass the Yellow Flag unless instructed to do so by a Marshal and will proceed with caution until clear of the incident, obstruction or stranded vehicle.

49.6.8. Failure to comply will be penalised by disqualification.

49.6.9. Time lost whilst Live Recovery of another Competitor is in progress will be regarded as force majeure (27.4.2).

49.7. Unless the SRs specify otherwise penalties will be awarded as follows:

49.7.1. For each second to complete the course over minimum time allowed: 1 mark per second.

49.7.2. For exceeding the maximum time allowed: disqualification.

49.7.3. For taking Official recovery: 100 marks.

49.8. Competitors must carry an A4-size white board with a red SOS on one side and black OK on the other (letters to be a minimum of 12cm high with a minimum stroke width of 1.5cm), with means to secure them on display for oncoming Competitors.

49.8.1. In the case of an accident where urgent medical attention is required, the red SOS sign should be displayed as quickly as possible to alert following cars and aid any helicopter attempting to assist.

49.8.2. Any crew that sees a red SOS sign displayed on a car, or sees a major accident where both crew members are inside the car but not displaying the SOS sign, must immediately and without exception stop to give assistance.

49.8.3. All following cars must also stop and the second car arriving at the scene must inform the next radio point.

49.8.4. Subsequent cars must leave a clear route for emergency vehicles.

49.8.5. The Clerk of the Course may award a discretionary time to any Competitor delayed in such circumstances.

49.8.6. Any crew which is able to but fails to comply with the rule will be reported to the Clerk of the Course who may impose penalties.

49.8.7. In the case of an accident where medical intervention is not required, the OK sign must be clearly shown to following vehicles, and to any helicopter attempting to assist.

49.8.8. If the crew leave the vehicle, the OK sign must be left clearly visible to other Competitors.

49.8.9. Any crew failing to comply will be subject to a penalty at the Clerk of the Course's discretion.

49.8.10. Competitors who misuse the SOS or OK signs will be penalised and may be reported to Motorsport UK for further action.

49.9. Any crew retiring from an event must report to the Organisers as soon as possible, except in cases of force majeure.

Hill Rallies [82-124]

50.1. The following regulations are additional to and take precedence over paragraphs 14 to 19 and 24 to 49:

50.1.1. Trials-type sections or tests may be incorporated in special stages and should be marked in accordance with the standard procedures for CCV Trials or Autotests.

50.1.2. Competitors must be advised of the average speed which will be applied on special stages. At no time will Competitors be required to average in excess of 50mph.

50.1.3. Each car must carry at least one Passenger (Navigator/Co-Driver) as well as the Driver.

50.1.4. Servicing issues are covered in 50.6 to 50.9.

50.1.5. No assistance may be expected from the Organisers even though they may give advice as to the source of supplies. Competitors are responsible for their own fuel, oil, water etc.

50.1.6. No vehicle may be moved other than by its own power except:

(a) By a ferry

(b) By outside means for a minimum distance necessary to extricate it from difficulty

(c) By gravity

(d) By its crew.

50.2. During the course of an event Competitors are not permitted to use, or be directly or indirectly concerned in the use of, helicopters or fixed wing aircraft in the vicinity of the event (whether in connection with servicing, aerial surveillance or for any other reason) without previous Motorsport UK authorisation in writing, and in compliance with CAA regulations (E.2.2.6).

50.2.1. Before considering any such authorisation, Motorsport UK must be satisfied that the liabilities of all those involved in the event have been covered.

50.2.2. Any such application must be made at least 14 days prior to an event.

50.2.3. In accordance with CAA regulations, no aircraft is allowed within 500ft of the route, or within 3,000ft of any large crowd.

Competitors

50.3.1. Competitors and their service personnel may only use radio transceiver equipment (and frequencies) that are licensed in accordance with Ofcom Regulations.

50.3.2. Competitors must not use or carry any radio Transmitting device which operates on, or interferes with, the Motorsport UK's Licensed Frequencies.

50.3.3. Contravention of these regulations will be penalised in accordance with 30.1.2(v) or 30.1.1(t).

50.4.1. All Drivers' and Co-Drivers' crash helmets and overalls must be produced for approval during scrutiny of a vehicle.

50.4.2. All crew members must wear a crash helmet bearing an MSA/Motorsport UK approval sticker (see K.10) and a safety belt throughout any Special Stage.

50.4.3. Crew members must not smoke during any stage or test.

50.4.4. Drivers must conform to the Medical Requirements specified in H.10.

50.4.5. No person under 16 years of age may be carried during a rally with Special Stages.

50.4.6. Competitors must comply with any instructions in the Road Book concerning stopping at road junctions. Failure to do so will incur penalties as in 30.1.2(o) or 30.1.1(m).

50.5.1. Competition numbers must be displayed on both sides of the vehicle, behind the front doors and above the vehicle waistline, and parallel to vehicle sides.

50.5.2. Rally plates at the front and rear will display Competition numbers with a minimum 100mm height.

50.5.3. On Multi-Use Hill Rallies these will be at the Organiser's option.

50.6. *Organised assistance (service) may be allowed on Hill Rallies if provided for in the SRs, and providing the Organisers have made available suitable service areas and a specific time allowance for servicing.

50.6.1. *Organised assistance anywhere other than in permitted areas is forbidden.

50.6.2. Service vehicles may be required by the SRs or the Official Instructions to follow a prescribed route to and from service areas. In such cases all other areas are Out of Bounds for service vehicles and their crews.

50.6.3. In any area where service is not allowed, the presence of a service vehicle (or any vehicle from which equipment or parts are obtained) or the collection of equipment previously deposited, will be considered as servicing.

50.6.4. These regulations do not prohibit Organisers advising Competitors of any garages en route where facilities are available.

50.7. The above regulations do not prevent Competitors from personally making their own vehicles safe to drive. Crews may work unassisted on their own cars, using equipment carried in their car, in 'No Service Areas' except:

50.7.1. Within 100m of any Control.

50.7.2. Between a Special Stage Arrival Control and the Special Stage Start Control.

50.7.3. In any Parc Fermé.

50.8. The only work Permitted in these areas (and it must be unassisted) is:

50.8.1. Replacing a flat tyre with a wheel and tyre carried in the competing car.

50.8.2. Cleaning lamp glasses, windscreens, windows, identification markings and vehicle registration numbers.

50.9.1. Except in the areas listed above, Competitors may work on their cars with the assistance from other Competitors, from any nationally recognised breakdown service, and from any commercial garage not associated with the Entrant and not organised in advance.

Motorsport UK House

OPEN
Monday – Friday
9.00–17.00

Tel: 01753 765000

Membership Team:
Tel: 01753 765050

Website:
www.motorsportuk.org

50.9.2. Breakdown service and commercial garage vehicles will not be allowed to enter Official service areas.

50.9.3. Competitors are responsible for ensuring that their service crews understand and comply with these regulations, and if Official Service Plates are issued, that the service vehicles at all times bear the Official Service Plate.

50.9.4. A Competitor may be fined or otherwise penalised by the Clerk of the Course if the crew of any service vehicle associated with their entry contravenes any regulation or Official instruction, or acts in a manner contrary to the interests of the event.

50.9.5. Competitors may be fined, but not otherwise penalised, for any breach of Road Traffic Laws by their service crews.

50.9.6. Competitors are strongly recommended to carry a First Aid Kit.

Special Stages

51.1. During any special stage or test the prescribed route must be followed, and any direction signs displayed are mandatory.

51.1.1. Competitors overshooting the stop line at the end of any stage or test are not allowed to reverse back to the Control.

51.1.2. Competitors are also not allowed to cross any part of a Special Stage in the opposite direction to rally traffic.

51.1.3. Competitors must not voluntarily leave the prescribed route without the express permission of the Stage Commander.

51.2.1. Any Competitor who is shown a Red Flag on a stage where they have been notified in advance of a Red Flag system must cease competition immediately and come to a standstill at the side of the course as soon as possible.

51.2.2. They must not proceed until advised to do so by an Official (14).

51.2.3. Competitors may only attempt a Special Stage once. Re-runs are not permitted (14).

***51.3.** Following instruction from a Stage Start Marshal that they are next to start on a Special Stage, Competitors abide by the following procedure:

51.3.1. The Marshal should give a loud verbal indication 30 seconds, 15 seconds, 10 seconds and 5 seconds before the actual start, and then countdown verbally each second 5-4-3-2-1-GO.

51.3.2. Upon the signal GO, a visual starting signal must be given which will normally be the raising of a flag from the bonnet (not the windscreen).

51.3.3. Any other visual signal to be used must be described in the SRs.

51.3.4. Making a false start will be penalised in accordance with 30.1.2(h) or 30.1.1(h).

51.3.5. Stages where Competitors are required to start at intervals of less than one minute may dispense with the 30 seconds advance warning. This revised procedure must be advised in the SRs.

51.4. Unless the SRs state otherwise, the use or possession of pace notes or any other means of giving a Competitor advice relating to the traversing of a Special Stage which has not been provided by the Organisers is forbidden (27).

51.4.1. This does not preclude the use of Ordnance Survey maps of 1:25,000 or 1:50,000 scale in addition to others that are specified in the SRs.

51.4.2. The only supplementary information which may be shown on the maps is information given by the Organisers of the event (including route details).

51.4.3. Contravention will be penalised as in 51.5.

51.5. Deleted.

Team Recovery (21)

52.1. The following regulations are additional to and take precedence over 24 to 35, 27.1, 28.1 and 41 to 43.

52.1.1. *The SRs will specify the number of vehicles comprising a team.

52.1.2. Teams will start in numerical order, and the Organisers will determine the order of running at each Observed Section.

52.1.3. Details of Observed Sections must be given at the Start and unless the SRs specify otherwise, teams will have the opportunity of inspecting the course before attempting each Observed Section.

52.2.1. Team Members may start in any order.

52.2.2. Each team will nominate a captain, who will be responsible for carrying the Official score card for the team, and who will produce it on demand to Officials.

52.2.3. Team vehicles must not be harnessed together before the start.

52.2.4. The onus of following the correct route will rest with the Team Captain.

52.3.1. No Passengers can be carried in any team vehicle when it leaves the Start.

52.3.2. This does not preclude other members of the team from being carried through Observed Sections, provided that they are properly seated and are only carried for as far as is necessary, and that the vehicle is stationary when they mount or dismount.

52.3.3. Seat belts need not be worn.

52.3.4. Any team vehicle that cannot maintain unassisted forward motion in the direction of the course must be recovered by other members of the team by pushing, towing or winching.

52.4.1. *All equipment to be used by team vehicles as means of self-recovery, including harness ropes and shackles, must be presented to, and cleared by, the Scrutineer prior to the Start.

52.4.2. This equipment must be carried on team vehicles throughout the Competition.

52.5.1. Before attempting any Observed Section, team vehicles will be brought to rest behind the Start line by Officials and will not proceed until instructed to do so.

52.5.2. *The starting signal will be stated in the SRs.

52.5.3. A team will be considered to have left an Observed Section when all team vehicles have crossed the finishing line.

52.5.4. Where a Competition involves self recovery, failure of all team vehicles to proceed, whether involuntary or otherwise, from the Start line into an Observed Section when instructed to do so will be regarded as a failure in that section.

52.6.1. Any team which fails to complete a section in the stated time will have three minutes added for each vehicle that has not successfully completed the section.

52.6.2. Unless the SRs state otherwise, a penalty of one minute will be added to the team time for each penalty marker touched.

52.6.3. The Official Instructions will state the maximum time allowed for each team to complete each Observed Section.

52.6.4. Results will be determined with reference to the time taken, including penalties, for the team to complete each Observed Section.

52.6.5. Further penalties may be applied if the SRs allow.

Point to Point (22)

53.1. The following regulations are additional to and take precedence over 24 to 35, and 41.

53.1.1. *The SRs will specify whether the event will comprise a set number of points to be visited in the shortest time, or a set amount of time during which the maximum number of points are to be visited. In either case all the team must cross a Finish line.

53.2. *Competitors will be expected to seek and visit points which may be hidden by the natural topography.

The SRs will specify:

53.2.1. If the points are to be visited at random or in a set order.

53.2.2. *If a point comprises a single marker pole with minimum height of 1m, or a gate of poles through which the direction of entry will be marked. Each point visited shall be recorded either by collecting a token or by an Official marking a score card. Tokens and score cards used will be provided by the Organisers.

53.2.3. *The starting signal to be used.

53.2.4. *The method of timing to be used (in accordance with 69).

53.2.5. *The maximum time allowed.

53.2.6. *The number of vehicles in a team.

53.3. Each team must nominate a Captain who will be responsible for carrying the Official score card or tokens for the team and who will produce them to Officials on demand.

53.3.1. In addition to the Driver, vehicles may carry one Passenger or Navigator who must be seated in accordance with the provisions of 41.1.5.

53.3.2. Competitors may be required to dismount at each point visited to record their visit and must fasten safety belts prior to the vehicle moving off again.

53.3.3. No recovery assistance outside that given by a team member is allowed.

53.3.4. Practising is not Permitted.

Cross Country Orienteering (20)

54.1. The following regulations are additional to and take precedence over paragraphs 24 to 35, 27.1, 28.1 and 41 to 43:

54.1.1. Competitors are expected to drive and navigate to specific objectives.

54.1.2. SRs will specify equipment required to meet navigational and route restrictions.

54.1.3. Competitors will be issued with instructions before their due start time.

54.2. No time schedule will be maintained during the event, but the maximum time allowed will be stated in the SRs.

54.3. The method of scoring must be specified in the SRs.

54.4. Objectives must be attempted without the use of winches or other means of assistance.

Challenge Events (23)

55.1. Each vehicle must carry a driver and either a co-driver or navigator.

55.1.1. Drivers and co-drivers must hold a valid RTA licence appropriate to the vehicle and either may drive the vehicle during the event. Navigators, minimum age 16, do not need to hold a valid RTA licence and may not drive during the competition.

55.1.2. Crew members must be accommodated in securely fixed seats and wearing approved seatbelts or harnesses while the vehicle is moving.

55.1.3. There is no compulsion to attempt to reach any point which has been set out.

55.1.4. There is no compulsion to attempt any Special Task. The SRs will specify any penalties which may be applied during the competition, including a maximum speed limit for competing vehicles.

55.1.5. The winner will be the vehicle or team which has attained the highest points score at the end of the competition.

55.1.6. Vehicles must comply with the Challenge Events Technical Regulations.

55.1.7. Winches may be required primarily for the purpose of self recovery.

55.1.8. All equipment to be used by team vehicles as means of self recovery, including ropes, strops and shackles, must be presented to, and passed by, the Scrutineer prior to the start.

55.1.9. The use of winch sails (minimum 1kg dry weight) and gloves is compulsory when winching.

55.1.10. When using winch cable or rope suitable gloves should be worn. Rubber and woollen gloves are not suitable.

Cross Country Driving Tests (23.2)

55.2.1. Drivers must hold a valid full RTA licence (not provisional) for vehicles with more than three wheels and produce a valid Club membership card.

55.2.2. The SRs may Permit entries from Drivers who are 16 or over without a full RTA Licence, provided that their Passenger has experience of Cross Country Trials and holds a full RTA Licence for the vehicle type entered.

55.2.3. The vehicle may only be driven between Driving Tests by a crew member who holds a valid full RTA Licence.

55.2.4. A Passenger may be carried to assist by giving directions when the driver holds a valid full RTA Licence.

55.2.5. The Passenger must occupy the seat alongside the Driver and wear a properly fastened and approved seat belt at all times during the test.

55.2.6. No other Passenger is allowed.

55.2.7. If the Driver holds a valid, full RTA Licence, a Passenger, if carried, must be 12 years or over.

55.2.8. Vehicles must comply with 62.1-62.1.6 and where either crew member is under 16 years of age the vehicle retains the original hardtop or truck cab and the seat belts comply with K2.1.1.

55.2.9. Classes are free, but the class structure must be stated in the SRs.

Driving Test Procedures

55.3.1. Drivers will be considered under Starter's orders when instructed by an Official to proceed to the Start line.

55.3.2. Drivers then failing to proceed may forfeit their run or may be penalised in accordance with Table P.55.5.(a).

55.3.3. A start will only be valid if made under the vehicle's own power.

55.3.4. When a car is required to stop astride a line, the line must be between its front and back axles and all the area of the tyres in contact with the ground must be seen to have crossed the full width of the line.

55.3.5. Similarly, if a car is required to cross a line with all four wheels, all tyre contact area must be seen to be clear of the line.

55.3.6. Timing at completion of a test must be based on the leading wheel (on the same axle) crossing the Finish line.

55.3.7. Penalties will be applied for failure to cross the Finish Line.

55.3.8. In any diagram illustrating a test, the dimensions should be approximate and for guidance only. Indications of the direction of travel of the competing cars when crossing a line, or passing between markers, must be shown unless specified otherwise (ignoring 'shunts' to avoid markers).

55.3.9. A maximum penalty (see Table P.55.5 (c)) shall be applied if a competitor crosses with both leading wheels a marked test line in the wrong direction, out of the prescribed sequence or too many/few times, otherwise competitors may correct their mistakes by returning to the point where they deviated from the test diagram, unless otherwise stated in the SRs.

55.3.10. In changes of direction either lock can be used (unless the test diagram specifically states otherwise).

55.3.11. Clerks of the Course wishing to define direction of travel between markers should include any necessary marked line(s).

55.3.12. In the event of re-run caused by a timing failure, the greater number of penalties incurred in either run will be added to the time taken in assessing the performance on that test.

Marking

55.4.1. Judges must be appointed to each test to adjudicate on:

(a) False starts

(b) Crossing/failing to cross marker lines

(c) Touching markers and not following correct route.

55.4.2. Competitors will be provided with a score card for the Organisers to record times and penalties at the completion of each test run.

55.4.3. Marks will be lost for time taken (if applicable) and for any infringements of the test instructions, such as striking a marker or crossing a boundary line.

Results

55.5.1. To be classified as a finisher, Competitors must complete not less than half of the tests and must hand in their score card to Officials within 15 minutes of all other Competitors completing the final test.

55.5.2. Competitors will start with zero marks.

55.5.3. All Class awards must be calculated on the basis of penalty marks lost, with the Competitor incurring the least penalty points being judged the winner.

55.5.4. In the event of a tie, the Competitor who was first to have the lesser penalty from the start will be adjudged the winner, unless another method of resolving ties is stated in the SRs.

55.5.5. Performance will be assessed as in Table P.55.5. unless the 'Marks Lost' stated are modified by the SRs. See Appendix 1, Table P.55.5.

Technical Regulations

Chassis

56.1. The vehicle must have a minimum wheelbase of 127cm (50in).

Body (including Aerodynamics)

56.2. Unless rear-engined, vehicles must have a bonnet or metal casing of solid flame retardant material covering or surrounding the engine, which is secured by fasteners of adequate strength and with a positive locking action.

56.2.1. Windscreens must be erected unless the event takes place wholly on private property or the SRs state otherwise.

56.2.2. Tailgates may be removed.

56.2.3. Be equipped with mudguards for all wheels which present no sharp edges and cover the complete wheel (flange+rim+tyre) around an arc of 120 degrees. This minimum coverage must:

(a) be achieved with a continuous surface of rigid material within which ventilation louvres may be fitted. The tyre must not be visible when viewed from above

(b) extend forward ahead of the axle line

(c) extend downward behind the wheel.

Seating

56.3. Vehicles must be equipped with two fixed seats for the Driver and Passenger, unless the SRs state otherwise.

56.3.1. The rearmost part of these seats must not be behind the rear wheel axis.

56.3.2. In the case of non production cars, the rearmost part of any additional seat must not be more than 38cm behind the rear wheel axis.

Engine

56.4. Engines must comply with J.5.4.

Suspension

56.5. Vehicles must be fitted with sprung suspension between wheels and chassis, unless originally manufactured otherwise.

56.5.1. Where the top mounting of the shock absorber, whether or not it is fitted with a coilspring, is mounted directly to a main member of the roll-cage, a brace must be fitted between the mounting point and the chassis or those members of the vehicle frame acting as the chassis.

56.5.2. It is prohibited to mount the shock absorber by drilling and/or welding a stud or bolt directly to the roll cage.

56.5.3. All mountings must be made with reinforcements in material at least the same thickness as the roll cage wall thickness.

56.5.4. The recommended mounting is shown in Appendix 1, drawing number 56.5.

Wheels

56.6. Vehicles may not be fitted with duplicated driving wheels unless Permitted by the SRs. The SRs may permit the use of TUV Approved hub adapters/wheel spacers up to a maximum of 30mm in depth.

Tyres

56.7. Tyres must be compatible with the wheels and be acceptable to the Organiser, unless a particular type and size of tyre is specified in the SRs.

56.7.1. Vehicles should carry a securely fastened spare wheel and tyre capable of replacing any one of the wheels in use on the vehicle, unless stated otherwise in the SRs.

56.7.2. Vehicles can have more than four wheels and tyres, but they must be compatible.

56.7.3. All tyres must have at least the minimum legal tread depth on all tyres.

56.7.4. Competitive Safaris, and Hill Rallies must specify tyre eligibility in the SRs. Tyres will be classified as All Terrain, Mud Terrain or Extreme and will be judged against the AT and MT patterns leading manufacturers, including BFG and General Tire.

Transmission

56.8. Vehicles must be equipped with an operable reverse gear and a non-torque biasing differential in full and free operation between the driving wheels, unless:

56.8.1. A differential was not fitted by the manufacturer.

56.8.2. The SRs specify otherwise.

56.9. Vehicles may use all wheel drive (unless the SRs specify otherwise) and may have traction afforded by wheels, track, marine propellers or any combination of these.

Electrical Systems

56.10. Vehicles must not be equipped with more than two auxiliary lights, which must be located in accordance with legal requirements, except where the event takes place wholly on private property.

Silencing

56.11. Vehicles must comply with the silencing levels in J.5.17 but the following parts of J remain unmodified by this section: Brakes, Steering, Cooling, Oil Systems, Fuel Systems, Weight/Ballast, Exhausts.

Safety

Competitive Safari, Point to Point and Hill Rally

56.12. There are three classifications of vehicle design which, whilst requiring the same principles of roll-cage design, may employ different mounting methods.

56.13. Monocoque vehicles: These are of unitary construction employing an integral chassis structure.

56.13.1. They must mount their roll-cages in accordance with K.1.3.2, may fit a diagonal as K Appendix 2, drawings 50 and 51 and must fit longitudinal door bars complying with K.1.3.5(b) (side sections K Appendix 2 Drawing number 9).

56.13.2. A centre roof bar must be installed either diagonally or, evenly spaced in line with the exterior longitudinal bars, as shown in K Appendix 2, drawing 53. If more than one centre bar is fitted, the bars must be evenly spaced. Double crossed roof bars, to the minimum specification for optional members, are strongly recommended, as shown in K Appendix 2, drawing 10.

56.13.3. It is recommended that a horizontal bar be incorporated in the front hoop, located approximately in line with the base of the windscreen, which may be bolted or welded to the front hoop members and shall comply with the specifications for an optional member (57.1.).

56.14. Vehicles with chassis: These employ a separate chassis structure from the body or superstructure.

56.14.1. They must mount their roll-cage directly to the chassis in accordance with K Appendix 2, drawing 33, following the principles of K.1.3.2.

56.14.2. Exceptionally where the body contains a superstructure of internal steel pressings including the floor and the roll-cage is MSA/Motorsport UK/FIA certified it is permitted to install the roll-cage in accordance with 56.13.

56.14.3. Where it is necessary to weld additional chassis outriggers on which to mount the roll-cage, these must be of at least 75x50mm box section steel, and not less than 3mm thick.

56.14.4. Alternatively the main hoop may be constructed as in K Appendix 2, drawing 38, allowing mounting to the main chassis rails, or as in K Appendix 2, drawings 50 and 51 where a beam is welded across the chassis rails. This beam must comply with 55.14.3.

56.14.5. Where the roll-cage passes through the superstructure's floor panels, two alternative methods may be employed:

(a) Either oversize holes allowing uninterrupted passage of the tubes to the chassis placed so as to allow for the movement of the superstructure where this is rubber mounted to the chassis, or

(b) Or spreader plates complying with K.1.2.2 may be used to sandwich the floor where the cage structure is continued through the floor pan to the chassis and mounted as in K Appendix 2, drawing 33.

56.14.6. The backstays in short wheelbase vehicles may have to be mounted aft of the rear suspension mountings to the chassis in order to comply with K.1.3.2.

56.14.7. K Appendix 2, drawings 52, 53, and 57 show the installation for an external front cage to an internally mounted rear roll bar and backstays showing the method for attachment through the vehicle's roof skin. This installation may only be used where the body is rigidly mounted to the chassis.

56.14.8. The backstays where mounted directly to the chassis must be angled to the main roll hoop as shown in K Appendix 2, drawings 53 and 57. Vehicles configured with the backstays mounted in line with the main chassis members built before 2014 are permitted.

56.14.9. The longitudinal bars connecting the front to rear roll bars should be straight, or where a manufacturer's truck cab or hard top is fitted the bars may follow the contours of the roof.

56.14.10. A centre bar must be installed either diagonally or, if evenly spaced in line with the exterior longitudinal bars, as shown in K Appendix 2, drawing 53. If more than one centre bar is fitted, the bars must be evenly spaced. Double crossed roof bars, to the minimum specification for optional members, are strongly recommended, as shown in K Appendix 2, drawing 10.

56.14.11. Where the roll-cage is mounted directly to the chassis, the front hoop may be mounted as shown in K Appendix 2, drawing 54.

56.14.12. Alternatively the front hoop may be mounted directly to a fabricated chassis extension, as shown in K Appendix 2, drawing 55. The chassis extension must be constructed as shown in K Appendix 2, drawing 56.

56.14.13. External front hoops must be fitted with a horizontal bar, approximately in line with the base of the windscreen, of the same material and dimensions as specified for the main members of the ROPS, and which may be bolted or welded to the front hoop. Recommended for vehicles with an internal front hoop where installation is practical.

56.14.14. Must be fitted with sill bars of the same material and specification as the main ROPS or primary chassis members, or box section steel, being a minimum of 40mm x 40mm x 3mm or 50mm x 25mm x 3mm. These may be welded or bolted to the main longitudinal chassis members.

56.15. Spaceframe vehicles: These are constructed entirely from a framework including an integral roll-cage made of tubes and/or box sections. For Safari Plus and all Hill Rallies, those elements comprising the primary chassis components must be of at least the same material and dimensions as the primary ROPS members, or equivalent box section steel.

56.15.1. All these vehicles must comply with Safety Criteria K.1.6.1 and K Appendix 2, drawings 6(a) or 36 and have roll-cages incorporated into the frame of the vehicle.

56.15.2. The roll-cage must be welded and integral to the design.

56.15.3. Where there may be difficulty with rear-engined vehicles in respect of fitting a diagonal brace, braces to K Appendix 2, drawings 34 or 35 may be used.

56.15.4. A centre roof bar being of the same material and dimensions as the main ROPS members must be installed either diagonally or, evenly spaced in line with the exterior longitudinal bars, as shown in K Appendix 2, drawing 53. If more than one centre bar is fitted, the bars must be evenly spaced. Double crossed roof bars are strongly recommended, to the minimum specification for optional members, as shown in K Appendix 2, drawing 10.

56.15.5. It is recommended that a horizontal bar be incorporated in the front hoop, located approximately in line with the base of the windscreen, being of the same material and dimensions as the main ROPS members and which may be bolted or welded to the front hoop members. For Safari Plus and all Hill Rallies this horizontal bar is mandatory.

56.15.6. A sill bar or single longitudinal door bar as shown in K Appendix 2, drawing 9, of the same material and dimensions must be fitted.

All Vehicle Types

57.1. Materials and dimensions must comply with K.1.4.1 or be to EN10255 (BS1387) medium weight, blue band: i.e. 42.30x3.2mm for vehicles up to 1000kg and 48.00x3.2mm for vehicles exceeding 1000kg.

Optional tubular members may be added to K1.4.1. or EN10255 (BS1387) medium weight. 30.00mm x 3.2mm. Materials may not be mixed.

57.1.1. All diameters are outside diameters.

57.1.2. All weights are deemed to be un-laden.

57.1.3. New vehicles which do not comply with the above must be approved in accordance with K.1.5.

57.1.4. A Vehicle Passport is required for any existing vehicle fitted with diagonal members forming a high cross as shown in Drawing K65. Vehicle Passports for these vehicles must be obtained by 1st January 2022, after which no further vehicles with such a design will be approved.

57.1.5. Deleted

57.2.1. All vehicles must comply with K.2.1.2, K.3.2, K.5, K.6, K.8.

57.3.1. If a windscreen is fitted it must be of either laminated glass or plastic of a minimum thickness of 4mm.

57.3.2. If a plastic windscreen is perforated for viewing purposes, approved goggles or visors must be worn.

57.4.1. Two red warning lights must be fitted, to the specification but not location of K.5.

57.4.2. They must be rearward facing and mounted as high as is practicable within the bodywork confines.

57.4.3. These must be switched on in poor visibility or as instructed by the Clerk of the Course.

57.5.1. A passenger grab rail/handle or strap must be fitted in front of the passenger and must be constructed and installed so as not to compromise the safety of the crew.

57.5.2. The fitting of mud flaps, of a flexible material not less than 5mm thick, behind each road wheel extending to a minimum of 4cm each side of the tyre tread, and a maximum of 10cm above the ground when the vehicle is stationary, is mandatory.

57.5.3. All vehicles must carry a small spill kit complying with J5.20.13.

57.6. Point to Point

Additional to 56-57

57.6.1. The requirement to comply with 57.5.2 may be relaxed by SRs.

57.6.2. SRs may permit vehicles complying with 56.6 and 58.4.

Team Recovery

58.1. All open or soft top vehicles must comply with Safety Criteria K Appendix 2, drawing 1, or with rear stays to K.1.6.1, K Appendix 2, drawings 53, 50 or 38.

58.1.1. All vehicles with manufacturer's hard top or truck cab are recommended to adopt Safety Criteria K.1.6.1, K Appendix 2, drawing 1.

58.1.2. All vehicles must comply with K.3.2 and K.6.

58.1.3. Criteria K.2.1.1 and K.8 are recommended.

58.1.4. If a windscreen is fitted it must be of either laminated glass or plastic of a minimum thickness of 4mm.

58.1.5. If a plastic windscreen is perforated for viewing purposes, goggles or visors must be worn.

58.1.6. Wire mesh is recommended to the front and rear of the cab, windscreen and rear window.

Timed Trial

58.1.7. Vehicles must be equipped with ROPS as follows;

(a) **Monocoque vehicles**. Must comply with 56.13.1. and 57.1. to 57.1.3.

(b) **Vehicles with chassis**. Must comply with 56.14.1. to 56.14.7., 56.14.9. and 56.14.11. to 56.14.13. The backstays where mounted directly to the chassis must be angled to the main roll hoop as shown in K Appendix 2, drawing 57. Existing vehicles configured with the backstays mounted in line with the main chassis members are permitted.

(c) **Spaceframe vehicles**. Must comply with 56.15. to 56.15.3.

All ROPS must comply with 57 to 57.1.3.

58.1.8. All vehicles must comply with K.3.2 and K.6.

58.1.9. All vehicles must comply with K2.1.2.

58.1.10. Compliance with K8 is recommended.

58.1.11. If a windscreen is fitted it must be of either laminated glass or plastic of a minimum thickness of 4mm.

58.1.12. If a plastic windscreen is perforated for viewing purposes, goggles or visors must be worn.

58.1.13. A passenger grab rail/handle or strap should be fitted in front of the passenger and where fitted must be constructed and installed so as not to compromise the safety of the crew.

Challenge Events

58.2. All open or soft top vehicles must comply with Safety Criteria K Appendix 2, drawing 1, or with rear stays to K.1.6.1, K Appendix 2, drawings 53, 50 or 38.

58.2.1. All vehicles with manufacturer's hard top or truck cab are recommended to adopt Safety Criteria K.1.6.1, K Appendix 2, drawing 1.

58.2.2. All vehicles must comply with K.3.2 and K.6.

58.2.3. All vehicles must comply with K.2.1.1.

58.2.4. If a windscreen is fitted it must be of either laminated glass or plastic of a minimum thickness of 4mm.

58.2.5. If a plastic windscreen is perforated for viewing purposes, goggles or visors must be worn.

58.2.6. Where a windscreen and/or rear window is not fitted to 58.2.4.a full width wire mesh is mandatory of a 2in maximum square aperture and a minimum 10g weld-mesh and must be securely fitted.

58.2.7. All vehicles must carry a small spill kit complying with J5.20.13.

58.3. Road Legal Challenge Vehicle

Road Legal Challenge Vehicles must fully comply with C&U Regulations in all respects. SRs may not relax this requirement.

58.3.1. Vehicles must comply with 56.2.3.

58.3.2. Vehicles must not be fitted with "Tree Wires" nor carry equipment on the front bumper nor front bodywork.

58.3.3. Any vehicle not complying with the above shall be deemed a Challenge Special.

58.4. Challenge Special

58.4.1. All vehicles must be fitted with a circuit breaker(s) which isolates the battery from all electrical circuits, which simultaneously stops the engine and which is operable by the driver whilst correctly seated. K.8 recommended. Vehicles fitted with electric winches may use a second isolator, operated by the primary circuit breaker either by means of a mechanical linkage or via a control circuit, to ensure that all winches and their control solenoids are isolated on operation of the primary circuit breaker.

58.4.2. Rear and four wheel steering is permitted, unless prohibited by SRs.

58.4.3. Steering provided by hydraulic or other method of operation (i.e. not by a direct mechanical link) is permitted. Hydraulic systems may not exceed an operating pressure of 150bar.

58.4.4. Independently operated front and/or rear brakes are permitted.

58.5. Challenge Winching and Recovery Equipment: All Vehicles

The following equipment safety ratings are minima based upon a single line load. Multiple line rigging and the actual mass of the vehicle may require equipment with a higher safety rating. The following minimum equipment must be carried:

58.5.1. A polyester towing rope, or a tow strap rated to 2 tonnes minimum SWL.

58.5.2. Two shackles, stamped with a minimum WLL of 3.25 tonnes and be CE marked.

58.5.3. Two tree protecting strops, labelled with a minimum WLL of 2 tonnes and be CE marked.

58.5.4. Winch cable/rope must be rated in excess of the maximum rating of the winch.

58.5.5. Any loop at the end of a steel cable must be swaged. Any loop at the end of a synthetic rope must be spliced.

Trials and Orienteering

59.1. The following are recommended;

59.1.1. K Appendix 2, drawing 1.

59.1.2. K.2.1.1.

59.1.3. Fire Extinguisher K.3.2.

59.1.4. For Orienteering Events all vehicles must carry a small spill kit complying with J5.20.13.

Miscellaneous – All Events

60.1. The following parts of J remain unmodified by this section: Brakes, Steering, Cooling, Oil Systems, Fuel Systems, Weight/Ballast, Exhausts.

60.1.1. Vehicles must be currently registered and taxed.

60.1.2. With the exception of Promotional Events the SRs may relax the requirement for a vehicle to be currently taxed if the event takes place wholly on private property.

60.1.3. The SRs may waive the requirement to comply with J.5.20.6.

60.2.1. Vehicles must also comply with all Statutory Regulations as to Construction and Use, particularly with regard to brakes, lighting, tyres, warning devices, rear view mirrors, silencers, speedometers, wings and windscreen, unless the SRs specify otherwise.

60.2.2. Vehicles must be fitted with a substantial towing point front and rear, painted in a contrasting colour, unless the SRs state otherwise.

60.3.1. Vehicles may be modified from manufacturer's original specifications, providing that the modifications meet vehicle regulations.

60.3.2. Independently operated rear brakes are Permitted.

60.4.1. The use of nylon ropes for recovery purposes is recommended.

60.4.2. Non-stretch ropes are acceptable.

60.4.3. Cables or chains are not recommended.

60.5. Where vehicles are fitted with a compressed air tank the pressure shall not exceed 21bar.

60.5.1. The engine must not produce visible smoke or exhaust emissions during the event, however reasonable emissions, such as an occasional "puff" are tolerated. Any named official of the event is empowered to judge this. If the competitor is unable to affect a solution during the event they shall be disqualified from the competition.

60.6. Sports Utility Task Vehicle. A Sport UTV is a two seater all terrain vehicle on general catalogued sale, of which 100 vehicles are produced in a 12 consecutive month period, of less than 1800cc corrected capacity and weighing less than 700 kg.

60.7. Rearward vision whilst properly seated within the confines of the vehicle's bodywork or ROPS must be possible. Vehicles with solid rear bulkheads or an obstructed view along the centreline of the longitudinal axis must be fitted with either external rear view mirrors or a reversing camera. Mirrors and/or cameras must be operational during competition.

Competitive Safaris

61. Classes in Competitive Safaris are free, but must be stated in the SRs.

Tyro Trials

62.1. Tyro Trials allow all standard production 4x4 vehicles with petrol or diesel engines (including military variants of civilian models) mass-produced by a motor manufacturer and generally available for normal retail sale, or available via a network of dealers, whether designed principally for the transportation of passengers, commercial use or dual purpose.

62.1.1. Saloon cars and cars derived commercial vehicles are prohibited.

62.1.2. Vehicles must be currently registered and taxed.

62.1.3. Where appropriate the vehicle must have a valid MOT Certificate where appropriate.

62.1.4. Front seats may be replaced but rear seats, and the original number of seats when the vehicle was manufactured, must be retained.

62.1.5. Bumpers must be retained in their original position.

62.1.6. Safety improvements may be added to the vehicle.

Junior Trials Vehicles

Chassis and Body

63.1. The chassis and bodywork in Junior Trials vehicles must be standard, except where modified to comply with these Regulations, and must be that from a proprietary machine.

63.1.1. J.5.3 does not apply in respect of the seat cushion being below the adjacent body.

63.1.2. 56.1 does not apply.

Engine

63.2. Vehicles must be fitted with a four-stroke petrol or diesel vertical crankshaft engine of the industrial and commercial restricted type, designed for use on a Ride on Mower or Lawn/Garden Tractor.

63.2.1. The engine must be fitted in its original location and retain its governor or restrictor, which may not be modified or removed.

63.2.2. The engine must be fitted with an air filter, the type and location of which is free.

63.2.3. The engine must be fitted with an effective silencer.

63.2.4. The silencer and exhaust manifold are free as to type and location, but must be fitted with shields where located outside of the bodywork or chassis.

Transmission

63.3. A manual, constant mesh transmission must be fitted, of the type originally fitted to the vehicle.

63.3.1. Transmissions of an alternative make or model may be fitted.

63.3.2. The Driver must be protected from all drive belts/chains.

63.3.3. Vehicles must not be fitted with a locked, locking or torque-biasing differential.

Wheels and Tyres

63.4. Wheels and tyres are free.

Brakes

63.5. Vehicles must have brake systems operating on both rear wheels simultaneously by a single foot pedal which may activate the brakes either mechanically or hydraulically.

63.5.1. The brakes must be capable of locking the wheels when applied at maximum speed.

63.5.2. A mechanical handbrake must be fitted which operates directly on both rear wheels and is capable of holding the vehicle on a 45° longitudinal gradient.

Steering

63.6. The steering system must retain its original location and operation, and must be un-assisted.

63.6.1. Steering system components are free and may be Strengthened.

63.6.2. A steering damper may be fitted.

Front Axle

63.7. The location and mounting of the front axle must be standard to the vehicle and no alteration may be made to the chassis or bodywork to increase articulation.

63.7.1. The front axle may be modified or replaced.

63.7.2. Movement of the front axle may be controlled by the addition of springs and/or dampers, or friction materials between the axle and the chassis.

Safety

63.8. A roll-cage (see K Appendix 2, drawing 58) must be fitted comprising a front and rear hoop which extend the full width of the bodywork and which maintain the minimum clearance above the Competitor's helmet when properly seated (K Appendix 2, drawing 31).

63.8.1. Sidebars must be fitted which prevent the Driver's feet from involuntarily leaving the confines of the vehicle.

63.8.2. A rear brace must be fitted to the rear hoop to guide and locate the shoulder straps of the seat belt.

63.8.3. The roll-cage, comprising the front and rear hoops, lateral bars, side bars and rear brace, must comply with K.1.4 or be to BS1387 medium weight, blue band (ie a minimum 42.30x3.2mm external diameter and wall thickness).

63.9. The roll-cage must be:

63.9.1. Bolted to the chassis with 3mm thick spreader plates and a minimum of two 10mm high tensile bolts at 25mm between centres per mounting (K Appendix 2, drawing 13), or

63.9.2. Bolted to outriggers of 3mm wall thickness bolted/welded to the chassis, using 3mm thick saddles and two 10mm high tensile bolts at 25mm between centres per mounting K Appendix 2, drawing 59), or

63.9.3. Welded to outriggers of 3mm wall thickness bolted/welded to the chassis as K Appendix 2, drawing 51.

63.10. Suitable head protection is strongly recommended.

63.10.1. A seat belt to K.2.1.2, 4 point must be fitted.

63.10.2. A circuit breaker to K.8 which is operable by the Driver when properly seated and which is clearly marked must be fitted.

63.10.3. The battery must be securely mounted and fitted in a sealed container or under the bonnet.

63.10.4. A strong and clearly marked recovery point must be fitted to the rear of the vehicle.

63.10.5. The seat must be rigidly located and designed to securely locate the Driver up to and including the shoulders.

63.10.6. A head restraint must be fitted where not integral to the seat (K.13).

63.10.7. The fuel tank must be located under the bonnet and comply with K.14.1.2.

Miscellaneous

63.11. A front bumper or bush guard must be fitted to protect the chassis and bodywork. This may provide location for under chassis protection and must provide a suitable towing point.

63.11.1. Under-vehicle protection skid plates/guards may be fitted to protect the steering, engine and transmission.

63.11.2. Ballast may be added to the vehicle, provided it is securely attached to the chassis or skid plates.

63.11.3. Ballast must be located below the floor line.

PUBLICATIONS, TECHNICAL PAPERS & CLUB EQUIPMENT

Subject to their availability the products and their prices listed below are correct at the time of going to press, but may be changed without further notice.

PUBLICATIONS (VAT zero rated)

Motorsport UK Yearbook £35.00
Motorsport UK Karting Yearbook £19.00

CLUB EQUIPMENT (VAT standard rated incl.)

Club Membership cards ..... 200 for £28.00
Signing-On Sheets – Competitors/Officials ..... FOC available on website
Signing-On Sheets – Media ..... FOC available on website
"Prohibited Area" rigid PVC warning signs ..... per pack of 5 £60.00
"Motor Sports Can Be Dangerous" rigid PVC warning sign ..... per pack of 5 £60.00

COMPETITORS EQUIPMENT (VAT standard rated incl.)

Motorsport UK Helmet Approval Sticker £2.50
Motorsport UK FHR Approval Sticker £2.50

TECHNICAL PAPERS (VAT zero rated, except † = standard rate)

Motorsport UK Rollcage Certificate – Official Copy ..... ‡each £30.00
Motorsport UK Historic Rally Vehicle Identity Form Registration ..... ‡£100.00
Motorsport UK Vehicle Passport (payable to Inspecting Scrutineer) £45.00
FIA Historic Technical Passport Application (excluding Registrars Fee) ... *‡each £408.00
FIA Current Homologation Papers for any UK car ..... ‡each £56.00
FIA Current Homologation Papers for any non UK car ..... ‡Price on application
FIA Lapsed Homologation Papers ..... ‡each £47.00
FIA Lapsed Homologation Papers for pre-1995 cars ..... ‡each £32.00

‡ Overseas orders are subject to an additional delivery charge.
* Excluding FIA fee.

For the above items, please address order(s) to:

Sales Team, Motorsport UK, Bicester OX27 8FY

Purchase online from www.motorsportuk.org

Appendix 1: Charts and Diagrams

Chart 11.10

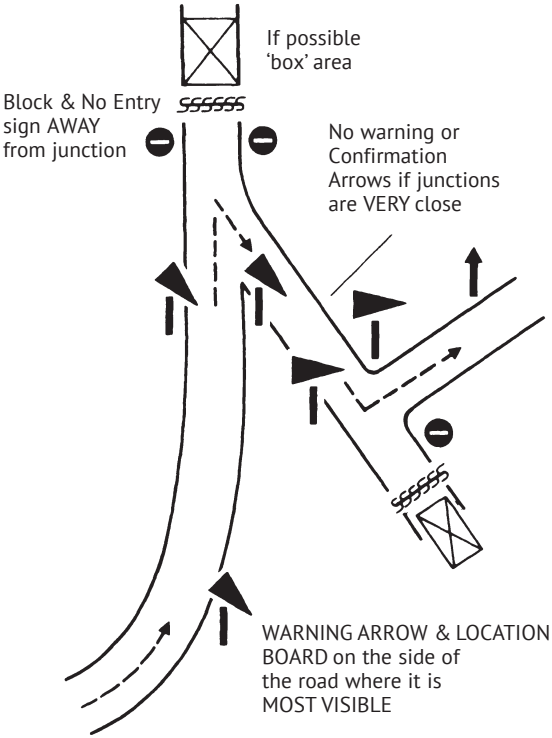

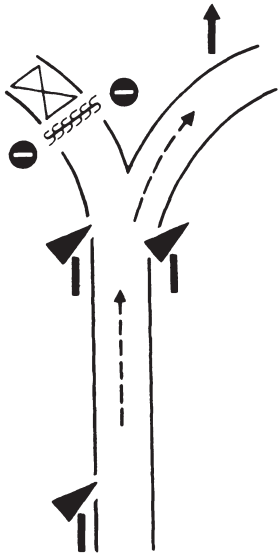

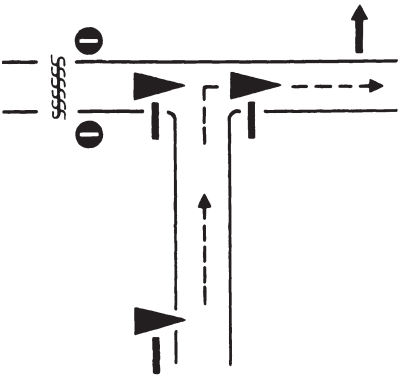

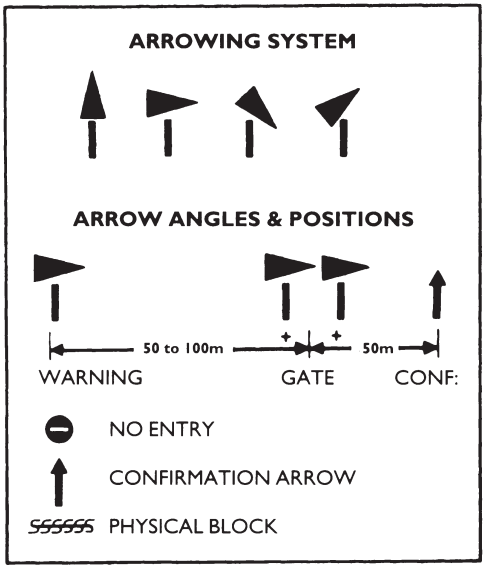

Chart 26(b)

CONTROL TYPE	DISTANCE FROM PREVIOUS SIGN	POSITION	COLOUR	BOARD Black Symbols
PASSAGE CONTROL	n/a	Beginning of Control Area	Yellow background	
	25 metres	At Control Stop	Red background	
	50 metres	End of Control Area	Yellow background	
TIME CONTROL	n/a	Beginning of Control Area	Yellow background	
	25 metres	At Control Stop	Red background	
	50 metres	End of Control Area	Yellow background	
START OF SPECIAL STAGE	n/a	Beginning of Control Area (Stage Arrival)	Yellow background	
	25 metres	Stage Arrival Control	Red background	
	50 - 200 metres	Stage Start	Red background	
FINISH OF SPECIAL STAGE	n/a	Warning of Stage Finish (both sides of track)	Yellow background	
	100 metres	Flying Finish Line (both sides of track)	Red background	
		Countdown boards (evenly spaced between Flying Finish & Stop Line)	Black on white background	
	100 - 300 metres	Stop Line	Red background	
	50 metres	End of Control Area	Yellow	

Chart 30.1.1

ASSESSMENT OF PERFORMANCE – TARGET TIMED CROSS COUNTRY EVENTS

Performance will be assessed as follows, unless modified by the SRs (29.1)

	Road Sections	Special Stages
(a) Not reporting at a control		Retired
(b) Not reporting at or providing proof of visiting a check	30 mins	
(c) Not complying with a requirement of the Road Book or Route Card including visiting a control more than once	30 mins	Stage Target
(d) Not complying with a reasonable instruction by an Official provided warning is given that a penalty will be applied	15 mins	Stage Target
(e) Not attempting or being ready to attempt a stage when instructed to do so		Stage Target
(f) Not completing a stage		Stage Target
(g) Not performing a stage correctly		Stage Target
(h) Making a false start at a stage		1 min
(i) Taking an incorrect route on a Special Stage		Stage Target
(j) Every second taken to complete a Stage (subject to 31.13)		1/60 min
(k) For each minute under Target Time on a Road Section of Service Area	1 min	
(l) For each minute before or after Due Time at a Main Control (out)	1 min	
(m) Breach of a Statutory requirement concerning the driving of a motor vehicle	30 mins	
(n) Contravening 33.4	30 mins	
(o) Breach of Technical Regulations concerning the use of lights and breaches of the Construction and Use or Lighting of Vehicles Regulations	30 mins	
(p) Excessive vehicle noise, excessive speed or driving likely to bring motor sport into disrepute (2.10 and 27.3)	30 mins	
(q) Damaged or ineffective silencing system	30 mins	
(r) Damage to car (28.1.1)	10 mins	
(s) Receiving assistance contrary to 50.1 or 50.6 or contravening 36.1	30 mins	Stage Target
**(t) Breach of Regulations 25, 36.2, 28.1.1, 50.3, 50.4, 51	Disqualification	
†(u) Breach of Regulation 11.2		Stage Target plus 30 mins
(v) Second offence (m), (n), (o), (p), (q), (s)	Disqualification	
(w) Breach of Regulation 50.2, 27.4.3, 49.8	Disqualification	

**These penalties may not be decreased by the Supplementary Regulations. The decision on causing excessive noise during an event is left to the discretion of the Judge, Environmental Scrutineer (G.7.8), or Driving Standards Observer (G.10.1) who may refuse permission to proceed at any time. Driving Standards Observers' decisions on imposing a penalty for excessive speed or bringing the sport into disrepute will be penalised according to the SRs. Note also powers contained in 27.4.
†Any road section penalties thus incurred will be applied up to and including disqualification.

Chart 30.1.1

ASSESSMENT OF PERFORMANCE – CROSS COUNTRY EVENTS USING SCHEDULED TIMING

Performance will be assessed in one of the methods listed. The 'Marks Lost' penalties as shown below will apply, *unless modified by the SRs or the SRs specify the Fails system* (29.1)

	Marks Lost	or Fails
(a) Not reporting at a control	30 mins	1
(b) Not reporting at or providing proof of visiting a check	30 mins	1
(c) Not complying with a requirement of the Road Book or Route Card including visiting a control more than once	15 mins	1
(d) Not complying with a reasonable instruction by an Official provided warning is given that a penalty will be applied	15 mins	1
(e) Not attempting or being ready to attempt a stage when instructed to do so	Stage Target	
(f) Not completing a stage	Stage Target	
(g) Not performing a stage correctly including taking the incorrect route	Stage Target	
(h) Making a false start at a stage	1 min	
(i) Every second taken to complete a Stage (subject to 31.13)	1/60 min	
(j) Arriving at a control or check, other than at the end of a non-competitive section before Scheduled time per minute	2 mins	
*(k) Arriving at a control or check after due time – per minute, where timing is to whole minutes –per fraction of a minute, where timing is to a fraction of a minute	1 min or fraction	Max. penalty not to exceed that for (a) missing a control
**(l) Early arrival at the end of a non-competitive section	30 mins	1
**(m) Breach of a Statutory requirement concerning the driving of a motor vehicle	30 mins	1
(n) Contravening 33.4	30 mins	1
(o) Breach of Technical Regulations concerning the use of lights and breaches of the Construction and Use or Lighting of Vehicles Regulations	30 mins	1
(p) Excessive vehicle noise, excessive speed or driving likely to bring motor sport into disrepute (2.10 and 27.3)	30 mins	1
(q) Damaged or ineffective silencing system	30 mins	1
(r) Damage to car (28.1.1)	10 mins	1
(s) Receiving assistance contrary to 50.1 or 50.6 or contravening 36.1	30 mins	1
**(t) Breach of Regulations 25, 28.1.1, 36.2, 50.3, 50.4, 51	Disqualification	
†(u) Breach of Regulation 11.2	Stage max. plus 30 mins	
(v) Second offence (o), (p), (q), (r), (s)	Disqualification	
(w) Breach of Regulation 50.2, 27.4.3, 49.8	Disqualification	

*Except in 'neutral' sections where only a maximum lateness penalty equal to (a) shall be applied.
**These penalties may not be decreased by the Supplementary Regulations. The decision on causing excessive noise during an event is left to the discretion of the Judge, Environmental Scrutineer (G.7.8), or Driving Standards Observer (G.10.1) who may refuse permission to proceed at any time. Driving Standards Observers' decisions on imposing a penalty for excessive speed or bringing the sport into disrepute will be penalised according to the SRs. Note also powers contained in 27.4).
†Any road section penalties thus incurred will be applied up to and including disqualification.

Drawing 5.3

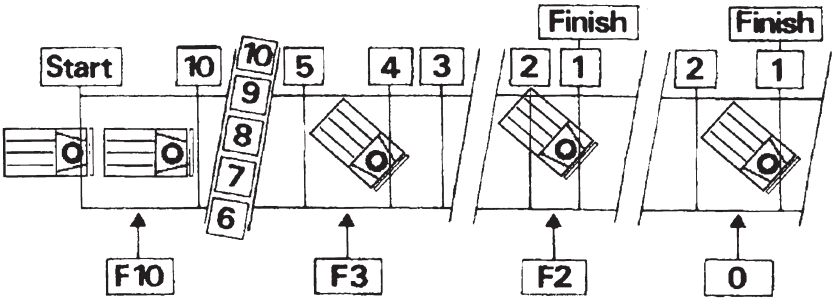

Diagram illustrating the application of 204 to 212. The lower figures preceded by F indicate the correct penalties for a car stopping in the position show.

Drawing 56.5

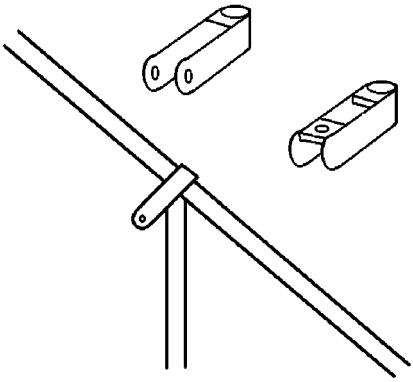

Table P.55.5

CROSS COUNTRY DRIVING TEST PENALTIES

	Marks Lost
(a) Each minute late in reporting at the start or a restart	5*
(b) Not attempting or being ready to attempt a test when instructed to do so	40*
(c) Not performing a test correctly, other than in (d) or (e) or not completing the test or making a false start	40*
(d) Striking any barrier, wall or marker or crossing the boundary of a test (per mistake)	5
(e) Failing to cross or stop at any line or specified position as required in a test (per mistake)	5
(f) Every second (and fraction) taken to complete test	1 fraction
(g) Every second (ignoring fractions) to complete test	1 no fractions

motorsport UK

Lifetime Achievement Award

This is the highest honour bestowed by the Motorsport UK Board. It is presented annually to a member of the UK motor sport community in recognition of outstanding achievement over many years in the sport. The award is not limited to competitors or volunteers:

2005	**Tom Delaney**	**2012**	**Ron Smith**	**2017**	**Sir Frank Williams**
2007	**Peter Cooper**	**2013**	**Andy Watson**		**Murray Walker OBE**
2008	**Howard Lapsley**	**2014**	**Len Pullen**	**2021**	**Sir Jackie Stewart**
	Les Needham	**2015**	**David Morley**		**Jimmy McRae**
2009	**Howard Strawford**	**2016**	**Sir Stirling Moss**		**Jonathan Lord**
2011	**Denis Cardell**		**David Butler MBE**		
	Tony Fletcher				

Prince Michael Award of Merit

The Prince Michael Award of Merit is a prestigious personal award made by Motorsport UK to a maximum of two recipients each year in recognition of meritorious service to British motor sport. Meritorious service encompasses distinguished service or significant contribution to British motor sports; outstanding achievement in British motor sports.

Award of Merit Winners

1991	Jack Romain	1997	Alec Rivers Fletcher;	2008	Stuart Turner
1992	Tony Bird		Donald Grieve	2009	David Butler MBE
1993	Peter Cooper;	1998	Michael Fenwick;	2011	Michael Southcombe
	Tony Fletcher		Keith Douglas	2013	Colin Hilton;
1994	John Felix; George Hall	2000	Robert Rae		Ronnie Trouton MBE
1995	Brian Molyneux	2002	Tony Reynolds	2015	Les Needham
1996	Tom Dooley;	2004	Ken Walker	2018	Tony Scott-Andrews
	Dick Newsum	2007	Colin Rossborough	2021	Dr Ian Roberts

Centenary Award of Merit

1997 Professor Sid Watkins

Specific Regulations for Circuit Racing (Q)

(Q) Circuit Racing

Organisers' Regulations

Organisers of any Race Meeting must comply with the Common Regulations for Organisers (Section D) and the following:

General

1.1. A permit for the organisation of a race meeting, championship or series is issued at the sole discretion of Motorsport UK and on the condition that:

1.1.1. A valid Track Licence exists for the circuit and its conditions are fulfilled (E.1).

1.1.2. No paying public spectators are allowed to be present if the organising club has not organised a race meeting within the preceding three years. In certain circumstances Motorsport UK may waive this requirement.

1.1.3. The appropriate local hospital authorities have been notified as to the time and date of the event, including practising.

1.1.4. Motorsport UK Timekeepers, Handicapper (if appropriate) and Scrutineers, appropriate to the grade of event, have been appointed.

1.1.5. Dual status Permits may be issued where one or more of the races at a meeting are to be open to holders of a lower grade of licence.

1.2. A Permit will not be issued for Car race meetings of International status, unless the Club possesses a fulltime Secretariat capable of taking full responsibility for the meeting. Additionally, the application must be specifically approved by Motorsport UK prior to submission to the FIA.

1.3. Unless authorisation has been granted by Motorsport UK there shall be no race (or practice for a race) which combines cars with exposed wheels with closed cars (i.e. saloons etc.). This regulation shall not apply to any race cars of periods A to D or to races for cars of periods E and F providing that such a race does not include any single seat, open wheeled car with a height of less than 33in.

1.4. In wet conditions every effort should be made to clear any accumulations of water from the track even if this means delaying the start. Further, drivers must be permitted to complete at least one familiarisation lap prior to the race if conditions have changed from dry to wet since practice (12.9.8).

1.5. It is strongly recommended that land-owners or developers discuss their outline plans for any new racing circuit with Motorsport UK before any construction begins. This is to ensure compliance with Motorsport UK and governmental safety standards, and race organising facilities which Motorsport UK may require under the General Regulations.

Race Officials

Clerk of the Course

2.1. One Clerk of the Course must be nominated as the Senior Clerk of the Course responsible for the overall control of the Meeting.

2.2. In the case of all Race events, the Clerk of the Course must hold a Clerk of the Course licence issued by Motorsport UK and valid for that grade of meeting.

2.2.1. For details of Retention and Upgrading, see Section G.

Judges

3.1. Judges may be appointed to adjudicate on:

(a) False Starts.

(b) Finishing Order.

(c) Crossing a Penalty Line.

(d) Overtaking under Yellow or Purple flag.

(e) Noise.

(f) Track Limits

3.2. The Chief Timekeeper will be a Judge in respect of laps covered and time.

3.3. The Chief Scrutineer and members of the Technical Commission will be Judges in respect of eligibility.

Driving Standards Observers (G.11.3)

4.1. Driving Standards Observers may be appointed to report on:

(i) Driving in a manner incompatible with general safety (C.1.1.5).

(ii) Failure to comply with displayed flag signals or lights (12.24)

(iii) Failure to comply with Track Regulations (12.17)

4.2. In consultation with the Clerk of the Course, Driving Standards Observers may position themselves at any point and may operate and report on a random basis as considered appropriate.

4.2.1. The Driving Standards Observers must make themselves known to the Senior Observer Post-Chief on duty at adjacent posts in their vicinity.

4.2.2. Driving Standards Observers will ensure that their watches are synchronised with Official Timekeepers time, and any written report submitted should clearly state the Official time that any alleged infringement of driving standards occurred.

4.2.3. The Driving Standards Observer is responsible for the reports of driving standards as outlined in 4.1, but should not personally become involved in dealing with any actual incidents.

Note: Throughout these sections an asterisk(*) indicates a requirement for additional information to be printed in the Supplementary Regulations (SRs). Text shown in Italics indicate a Regulation which may be amended in the SRs. Text shown in red indicates a new or amended regulation for 2022.

Marshals

5.1. Marshals (G.12) shall patrol between the course and all unfenced enclosures. Those stationed outside the pits, paddock or enclosures should be warned to remain behind protective barriers, in the event of an impending incident. Officials should be briefed on their duties and wear no clothing whose colour might be confused with flag colours.

Championships

6.1. Please refer to Section W – Championships.

6.2. Series. A series of individual events organised to a common set of Sporting and/or Technical Regulations with no accumulative winner, must register with Motorsport UK on the prescribed form which will include: (a) title (b) vehicle and (c) minimum licence status. A registration fee will be levied. The Registration will be accepted by the issue of a Series Registration document.

6.3. It is the Organising Permit holder's responsibility to ensure that any Event possesses either a Championship Permit or a Series Registration document, as appropriate.

Junior Car Racing

7.1. Motorsport UK may authorise a maximum of four Junior Car Racing Championships annually, each of which must be endorsed and submitted for approval by a Motorsport UK recognised club. Motorsport UK shall however have the right to exceed the above maximum number in circumstances which Motorsport UK considers in its sole discretion to be appropriate or where the FIA has given approval.

7.1.1. Any proposed vehicle must fully comply with the Motorsport UK Junior Formulae Technical Requirements, as published by Motorsport UK from time to time (subject to the Motorsport UK Stability of Regulations [A2.5.2]).

7.1.2. Motorsport UK will licence Junior Car Racing Championship Organising Clubs and such licences will remain valid for 3 years, when prospective Organisers may again apply for a licence.

7.2. Any new manufacturer backed Junior Car Racing Championship must have guaranteed manufacturer support for a minimum of three years. W1.3. shall apply in its entirely except that 7.3. below applies (W1.3.1.5.).

7.2.1. Deleted.

7.3. Each Junior Car Racing Championship should achieve an average of 12 starters during any one year in order to retain Championship status.

7.4. A Junior Car Racing Championship will be permitted to accept registrations from Drivers who have achieved their 14th birthday who will be permitted to continue until 31st December of the year of their 17th birthday.

7.5. H8.2.1. applies and competitors must satisfactorily complete the extended ARDS course specifically designed for Junior Car Racing.

7.5.1. The Competition Licence application must be endorsed and submitted to Motorsport UK by one of the Junior Race Championship Organising Clubs.

7.5.2. This Licence will state 'Junior Race Formulae Only' and will be held by the Junior Car Racing Championship Organising Club.

7.6. The Junior Driver will be permitted to participate in those Championships authorised by Motorsport UK and the licence holding Junior Race Championship Organiser will be authorised to copy the held licence and pass to the fellow Junior Racing Championship organiser(s), if required. H22.1.2 to H22.1.4. will be waived in this respect.

7.7. Only Motorsport UK is permitted to authorise a Junior Driver to participate in the Motor Sport Ireland Junior Car Racing Championship, any issued licence will be retained by Motorsport UK in this regard.

7.8. The Motorsport UK Junior Car Racing licence is not valid for any other event or discipline.

7.9. Once a Junior competitor reaches 16 years of age he/she is eligible to be issued a Race Club licence. Upon issue of a Race Club licence (unrestricted) and competition within Car Racing events the Driver will no longer be eligible to again be issued the Race Club (Junior Formulae) licence nor to compete within the Junior Racing Formulae.

7.10. A Single Seater Championship may make application to Motorsport UK to accept registrations from Drivers who have achieved their 15th birthday subject to the Driver being entitled to hold or the current holder of an International 'ITE' or 'ITF' Kart licence and that the eligible vehicles:

(a) have a Weight/Power ratio greater than 3 kg/hp, and

(b) meet the current FIA Formula 3 (Article 275) or FIA Formula 4 (Article 274) crash test and safety requirements.

7.10.1. Competitors must satisfactorily complete the extended ARDS course specifically designed for Junior Car Racing.

7.10.2. The Competition Licence application must be endorsed and submitted to Motorsport UK by the Championship Organising Club.

7.10.3. This Licence will be restricted to the permitted Championship and will be held by the Championship Organising Club.

7.10.3.1. This licence is not valid for any other event or discipline.

7.10.4. Once the driver reaches 16 years of age he is eligible to be issued an unrestricted Race Club licence.

7.10.5. A licence issued by an EU ASN may also be accepted subject to agreement with Motorsport UK.

Alternative Championship Rounds

7.11. In the case that a round is cancelled, due to reasons of safety or force majeure, the Championship Permit holding Club is entitled, contrary to D11.1.3, to arrange an alternative date (and if necessary venue) upon which to run the event, provided that 85% of the Competitors entered for the event agree to the change. Only those entered for the cancelled event may take part in the alternative event.

7.11.1. Agreement will be sought either a) on the day of cancellation if the Competitors entered are present at the event or b) by contacting the Competitors via their address/email, as stated on their championship registration form. Failure to respond within 48 hours via e-mail or 'Signed For' delivery by post will be assumed to signify the Competitors agreement to the change.

Restrictions on Organisers

8.1. No racing or practice may take place until:

8.1.1. The Chief Medical Officer has reported to the Senior Clerk of the Course that the necessary doctors/paramedics, mobile ambulance vehicles and first aid personnel are present and have been briefed. If no ambulance or suitable substitute vehicle is available at the event, the competition or practice must be suspended (Section F).

8.1.2. The Stewards of the Meeting have seen the Fire Equipment Certificate referred to in E.7.

8.1.3. The Clerk of the Course has reported to the Stewards of the Meeting that the conditions of the Permit and Track Licence are fulfilled. Before making such a report the Clerk of the Course, or a Deputy appointed by him specifically for such purpose, shall inspect the course and its installations.

8.1.4. The Clerk of the Course is sure that breakdown vehicles are present in sufficient number to cope with any incidents which may be expected having regard to the type of course and number of competitors.

8.1.5. The Clerk of the Course is satisfied that the licensed Rescue Vehicle(s) are positioned in accordance with the Track Licence.

8.2. No vehicle, other than a competing car, shall be taken on to the course during a competition except to deal with a grave emergency, and then only as instructed by the Clerk of the Course, who must be satisfied that the driver of such a vehicle knows the operating status of the track and that flag marshals will warn competing drivers.

8.3. The course or its features or markings may only be changed between the last practising period and the event itself in exceptional circumstances. Consideration may be given by the Clerk of the Course in consultation with the Stewards of the Meeting to arranging an additional scheduled practice.

8.4. If the organisers arrange to display signs to competitors indicating the progress of the race, these signals will show the number of laps remaining, unless Supplementary Regulations or Final Instructions or an official bulletin from the Clerk of the Course indicates otherwise.

Endurance Racing

** Indicates maximum figures that may be reduced in the SR's.*

9.1. Endurance Race. A Race scheduled to have a minimum of 90 minutes duration, with refuelling permitted and/or Driver stops and/or Driver changes, as an integral part of the race.

9.1.1. Endurance Races should be started by Rolling Start, unless otherwise stated in SR's.

9.1.2. There is no restriction on the maximum number of drivers for each vehicle.

9.1.2.1. *A driver may not drive for more than 3 hours in any 5-hour period.

9.1.2.2. For races over 6 hours any one driver must not exceed 60% of the scheduled race.

9.1.3. A driver may drive a maximum of 2 cars during the event provided that he is properly entered and qualified in each car.

9.1.4. Whilst in the pit lane:

(i) * the maximum pit lane speed limit is 60kph

(ii) it is recommended that all personnel wear a high visibility jacket/vest approved by the organisers. During any period of darkness a high visibility jacket/vest is mandatory.

(iii) *there must be no more than 3 people on the pit wall, per car

(iv) *there must be no more than 4 people working on the car at any one time

(v) all equipment and personnel must be in the pit garage when the relevant car is not making a pit stop, with the exception of pit signallers. Where there are no garages arrangements must be approved in advance with Motorsport UK.

(vi) no work may take place on the car during refuelling and the engine must be switched off.

(vii) it is the responsibility of the Entrant to release his car after a pit stop only when it is safe to do so. Cars in the fast lane have priority over those leaving the working area.

9.1.5. All starters in an Endurance race will be classified in the results according to the number of completed laps.

Medical Arrangements, Emergency Rescue Vehicles and Equipment (Section F)

10.1. At all permanent circuits there shall be a medical centre equipped in accordance with the current Motorsport UK medical centre protocol.

10.2. The appropriate number of Doctors, Motorsport UK registered Paramedics and Ambulances must be present throughout practice and racing and positioned, where necessary according to the Track Licence.

10.3. Providing that the basic minimum of one doctor is complied with, the remaining posts shall be filled with either Motorsport UK registered paramedics (F.7.3, F.7.4) or Doctors appointed to the event at the sole discretion of the Chief Medical Officer.

10.4. At all race meetings, at least one licensed Rescue Vehicle and crew should be in attendance and positioned as indicated on the track licence.

Competition Regulations

Signing-on

11.1. In conjunction with signing-on the following items must be produced for approval:

(a) Racing Competition Licence/Medical Certificate for Driver.

(b) International Medical Aptitude Certificate (if applicable).

(c) Entrants Competition Licence (if applicable).

11.1.1. Prior to practicing any driver who has not raced on the circuit in its current track configuration in a car, must report to the Clerk of the Course, or his nominee, who will specifically brief the driver before they start practice.

Scrutineering

***11.2.** Competitors and Vehicles must be presented for scrutiny and practice at times specified in the SRs. Any Scrutineering Ticket relating to a previous meeting must be removed before presentation of the vehicle for scrutineering. Homologation papers must be presented when appropriate.

11.2.1. Any competitor not reporting as instructed, may be fined or disqualified.

11.2.2. Cars competing in Race Meetings must comply with 13 and Section J, and any appropriate Approved Formula Regulations.

11.2.3. No car may be driven in the event until it has been approved by a Motorsport UK Scrutineer of the Meeting for safety and eligibility.

11.2.4. If, after approval for an event, any vehicle is dismantled or modified in a manner which may affect its safety or eligibility, or is involved in any accident which is likely to have a similar effect or is driven in practice or competition at another event it shall be represented for approval. The entrant shall be responsible for seeking such fresh approval.

11.2.5. In the event of an accident or collision occurring during a race or practice the vehicle or vehicles involved may be required to halt for examination.

11.2.6. Any vehicle involved in an incident which is rendered unable to proceed, or where any person is injured must not be touched by any person other than officials, without the specific approval of the Clerk of the Course. Furthermore, the driver concerned may not race again without the approval of the Chief Medical Officer.

11.2.7. No vehicle having been presented for scrutineering may be taken away from the circuit before the final technical checks have been concluded for the race and cars released from Parc Fermé without the prior authority of the Chief Scrutineer who will report such to the Clerk of the Course.

Radios

11.3.

(a) Cars will be Permitted to carry radio transmitters or receivers, for which Ofcom licences, where required, will be checked at scrutineering, in the following races only:

(i) International non-Historic status races

(ii) Those taking place on a high speed oval circuit where regulations Permit the use of spotters

(iii) Races which involve a Driver change

(iv) Where the Competitor has a Motorsport UK-approved information system tuned to the frequency of a transmitting device, which is under the direct and sole control of the Clerk of the Course or Chief Timekeeper. The system is to be used solely for providing competitors with timing data issued by the Chief Timekeeper and/or electronic flag signals, instructions or warnings issued by the Clerk of the Course.

(v) In the event that a frequency used by a driver, team, manufacturer/constructor and/or any of their supplier interferes with a frequency used by a local service or event officials or another third party the driver, team, manufacturer/ constructor and/or supplier may be required to changes its radio frequency to a non-conflicting frequency to the satisfaction of the Co-ordinator and in accordance with the requirements of Ofcom. The driver, team and/or manufacturer/constructor may be suspended from testing and Qualifying and Racing until a change of frequency has been effected.

(b) No signal of any kind may pass between a moving car and anyone connected with the car's Entrant, Team or Driver save for the following:

(i) Legible messages on a Pit Board

(ii) Body movement by the Driver

(iii) Verbal communication between a Driver and his Team by means of radio using an approved frequency subject to 11.3.(a)

(iv) Lap trigger signals from the Pits to the car. Lap marker transmitters shall be battery powered and once operating must be free standing (not attached to any other pit equipment by means of wires or optical fibres) and incapable of receiving external information. Such lap triggers shall use a transmitter operating with a carrier frequency above 10Ghz (radio or optical) and a beam half angle of no more than 36° when measured at the 3dB point, and shall not be used for the transmission of any data from the pit to the car other than the lap mark. Lap mark data must be transmitted repeatedly and must be demonstrably consistent

(v) A single burst of timing data from the car to the Pits as the car passes the receiver. All timing beacons and receivers must be a minimum of 10m from any official timing beam.

11.3.1. Mobile phone or tablet devices are prohibited from being carried in the competing vehicle whilst on the circuit.

Competition Numbers and Identification (J.4.1.8, J.4.1)

11.4. Vehicles will be identified by means of a competition number allocated by the organisers and displayed as specified in J.4.1. The use of "0" or "00" is prohibited unless preceded by any number 1 to 9.

11.4.1. The numbers shall be in position before the vehicle is presented for scrutiny and will be subject to approval as to position, legibility and size. Modifications may be required as a result of observations during practice.

11.4.2. Competition numbers must be covered at all times when driving on the public highway.

11.4.3. The Chief Timekeeper may decline to record the performance of any vehicle whose competition numbers are not readily apparent to the lap recorders.

11.4.4. On any car driven by a person who has not received six car race signatures on his Interclub Licence, there shall be on the back of the car a yellow square, 7in x 7in, with a black diagonal cross, with strokes 6in long and 1in wide.

11.5. The organisers may, in addition to the number format provided in J4.1, also permit competition numbers to be moved to the rear side windows (above the drivers' name) on the vehicle in which case.

11.5.1. The numbers for each rear side window, shall be:

(i) a minimum of 200mm high

(ii) with a stroke width of at least 20mm

(iii) coloured reflective yellow.

11.5.2. In addition, the windscreen of these cars must display the competition number positioned on the upper area of the passenger's side of the windscreen, as follows:

(i) the numerals must be at least 150mm high

(ii) be in the same colour and font as those displayed on the rear side windows

(iii) be placed no closer than 50mm from the lower edge of the windscreen "sun-strip" and 50mm from the side edge of the windscreen.

Licence Restrictions

11.6. See Section H.8 and H.14.1.1.

11.6.1. Any Driver competing in a Single Seat Racing Car, 0.5bhp/kg or greater (excluding driver weight), must be the holder of a Race National licence, as a minimum, with the exception of a Championship which has been authorised by Motorsport UK to set an alternative qualification.

11.6.2. Any Driver competing in a vehicle of 0.34bhp/kg or higher (excluding driver weight) and measured at the driven wheels, with the exception of single seaters as detailed in **11.6.1.** above, must be the holder of a Race National licence, as a minimum.

Competition Restrictions

Drivers

12.1. A driver shall throughout the competition:

12.1.1. Wear properly fastened and positioned:

(a) A crash helmet to a standard specified in the current Regulations and bearing a MSA/ Motorsport UK approval sticker, which fits properly and is in a serviceable condition (see K.10).

(b) Goggles or visor of splinter-proof material (unless in a closed car with a full-size windscreen in use), sufficient to protect his eyes.

(c) Flame Resistant Overalls which shall cover arms, legs and the torso up to the neck. The use of flame resistant balaclava, socks, and underwear is strongly recommended (see K9). Flame resistant gloves and shoes are mandatory.

(d) For events outside the UK the mandatory minimum standards for drivers in Circuit Racing would normally be FIA specification personal protection equipment.

(e) An FIA approved FHR device, fitted in accordance with K.10.4, is Mandatory for drivers in Circuit Racing. With the exception of Period Defined Vehicles for which it is recommend.

All items must be produced for inspection and approval at Scrutineering.

12.1.2. Refrain from smoking and/or using electronic alternatives.

12.1.3. Be the only person in the car whilst the vehicle is on the track. A driver may drive only one car, with the exception of the provision detailed within 9.1.3. Not more than one driver may drive the same car in any one race, unless the SRs specify otherwise.

12.1.4. Ensure that during practice and the race, no Team personnel are allowed on the track, except that whilst a car is at its designated pit, team personnel in accordance with 12.25.5 may work on the car. Should there be an approved signalling area, one timekeeper and one signaller for each car may be in this area.

Incidents

12.2. The Clerk of the Course shall ensure that after every accident or incident involving a competing vehicle or vehicles the following are informed:

(i) The Chief Scrutineer where mechanical failure is suspected, mechanical damage is substantial, or the completion of a serious incident form is necessary

(ii) The appointed Motorsport UK Steward of the Meeting where there is injury involving treatment beyond the capability of the venue staff or where judicial action is likely or has been taken.

12.2.1. No vehicle or driver involved in a serious incident shall Full details of such approval must be delivered in the Steward's Report to Motorsport UK.

12.2.2. At the conclusion of each race each Post-Chief shall report any incidents in writing to the Clerk of the Course. Post-Chiefs will also pay attention to driving standards.

12.3. At Race Circuits where the use of specialist "snatch" vehicles is licensed all such vehicles must only be operated by suitably trained personnel and under the protection of yellow flags or by neutralisation of the race in accordance with the relevant guidelines published by Motorsport UK.

12.3.1. Live "snatch" is prohibited for:

(i) single seaters; and

(ii) open sports cars without a full roll cage.

12.3.2. At Race Circuits not licensed for the use of "snatch" vehicles the recovery of a vehicle creating an obstruction or hazard can only be carried out once the race has been neutralised unless recovery is executed manually.

Practice (G.5.2.9)

12.4. Every driver, including drivers of vehicles which are to give performance demonstrations, must be given the opportunity of practising in conditions similar to those to be expected in the competition, and any driver who has not previously raced over the course in its current layout, within the preceding twelve months, must complete at least three practice laps in the car to be raced by him during which he shall satisfy the Clerk of the Course as to his competence. Drivers must be given at least the following opportunity for practising:

12.4.1. Organisers will provide a period sufficient to allow at least three laps of practice in the prevailing conditions. It is recommended to schedule a period of 10 minutes of practice if the track is less than one mile in length; 15 minutes for a track between 1 mile and 2.5 miles; and 20 minutes for tracks over 2.5 miles.

12.4.2. Organisers will provide a separate practice session for each race, Championship or Series (unless the SRs or Final Instructions state differently). Cars practising entirely out of session will be placed at the back of the grid, without the addition of a time delay, except where grid positions have been made in accordance with 12.9.2. (b), (c), (d), (e) or (f). If more than one driver is subject to this rule then starting positions shall be determined by the Clerk of the Course. Qualified reserves shall however enjoy precedence over competitors practising entirely out of session or whose practice times have been disallowed for whatever reason (C3.3).

12.4.3. Drivers whose best lap time exceeds by more than 10% that of the third fastest car within its class (where similar weather conditions prevailed), may be disqualified at the discretion of the Clerk of the Course.

12.4.4. During practising the number of vehicles on the course shall not exceed the number permitted in a race by more than 20% unless the Track Licence specifies otherwise (E.2.2.1).

Heats

12.5. A competition may be run in heats, the composition of which will be determined by the organisers and published in the Supplementary Regulations, Final Instructions and/or official programme. The composition of the heats may be modified or heats consolidated only by the Clerk of the Course after consultation with the Championship Co-ordinator, if appropriate.

***12.6.** The method of composing the final must be given in the SRs.

12.6.1. Starting positions in the final will be determined by the finishing times recorded in each heat, unless the SRs specify otherwise.

12.6.2. A driver must drive the same car in the final as in the heats.

Handicapping

12.7. Any handicap will be based on the Handicapper's estimate of the potential performance of the cars entered. Speeds achieved during practice will be used as a guide – unless some other basis is advised in SRs.

12.7.1. A handicap may be modified after initial publication but a finalised list of handicaps should be published at least 30 minutes prior to the start of a race.

12.7.2. In the case of races in which the handicap is wholly or partly based on practice times, a driver who in any lap improves upon his best practice lap time by more than 5% may be disqualified by the Clerk of the Course. This penalty may be waived if the Handicapper advises the Clerk of the Course of any extenuating circumstances.

12.7.3. For handicap races the handicap shall be so arranged by the allocation of credit laps that all cars will have left the starting area before the limit car has completed its first lap. Cars due to start at different times should not be placed in the same row on the starting grid.

Timing

12.8. The completion of the first and subsequent laps shall be timed when each vehicle crosses the control line unless the SRs state otherwise.

12.8.1. At all times throughout the event, competing vehicles shall be fitted with a working timing identification module (i.e. transponder). This must be compliant with the timekeeper's equipment. The module identification number should be submitted to the Event Secretary on the entry form. It is the responsibility of the competitor to ensure that the module is working and safely fitted in a suitable position on the vehicle. Failure of the module may result in the competing vehicle being untimed.

12.8.2. Where, for whatever reason, timing is carried out manually, the timing of a vehicle crossing a control line shall be taken at the moment when the centre of the leading wheel(s) pass(es) over that line.

12.8.3. Transponder only timing must not be to an accuracy of less than 0.01 seconds.

12.8.4. Transponders must be from the Motorsport UK approved list and used in conjunction with decoders certified in accordance with G.29.12.

12.8.5. The fitment of the transponder must be in accordance with the manufacturer's instructions at a predetermined position on the vehicle, as detailed in the SRs.

Starts

12.9. Each vehicle shall have an allotted position at the start in accordance with 12.9.2.

12.9.1. The Supplementary Regulations or Final Instructions will specify:

(a) the method of determining starting positions,

(b) the maximum number of starters in each race.

12.9.2. Starting positions will be determined by:

(a) practice times, or

(b) handicap, or

(c) finishing order in a preceding race, or

(d) selection made with the object of placing the fastest driver at the front, or

(e) current positions in a championship, or

(f) ballot (method specified in writing in Supplementary Regulations, Final Instructions or by Bulletin).

12.9.3. When starting positions are determined by practice times:

(a) Only those times established by a driver in the car, correctly numbered, eligible, and which he is driving in the race, will be recorded. (Unless authorised by SRs 'spare' cars are not permitted.)

(b) All cars in an event must be given the opportunity to take part in the same practice.

(c) Any flying lap time recorded in a correct practice session will be taken into account in determining grid positions, even if the remainder of the qualifying laps are completed 'out of session'.

12.9.4. Any driver or car which has had all their practice times disallowed but remains eligible to compete will be placed behind the rear line of the normal starting grid and will not start when the normal starting signal is given. Such drivers will be given a starting signal 10 seconds later. This delayed start cannot be applied retrospectively. For the purpose of calculating times or speed the normal starting signal will be used. If more than one driver is subject to this rule then starting positions shall be determined by the Clerk of the Course. For races with a rolling start such competitors will start from the pit lane after all the other cars have started.

12.9.5. Within the provisions of 12.4 and 12.9.3 the lowest practice time will be considered the most meritorious and the driver and car concerned given the pole position at the start, with other drivers and cars arranged in order of the times recorded.

12.9.6. When identical times are recorded by more than one driver in the official practice session for that race the driver first setting such a time will receive the better starting position.

12.9.7. Any driver who has not previously raced on the course in its current layout within the preceding twelve months must complete at least three practice laps in the car to be raced by him, during which he shall satisfy the Clerk of the Course as to his competence.

12.9.8. In addition, if the track conditions have changed from dry to wet since practice, drivers will be permitted one reconnaissance lap prior to the race. Drivers will be notified accordingly before they leave the assembly area or pit lane, whichever is applicable.

12.9.9. Any competitor who is on the track at the time of showing the one-minute board, or who is allowed to join the race with the permission of the Clerk of the Course is defined as coming under starter's orders, and is therefore deemed to be a starter.

12.9.10. A non-starter is any competitor who does not fulfil the criteria specified in 12.9.9.

12.9.11. Starting. There are two methods of starting. The SRs or Championship Regulations must state the method to be used:

(a) **Standing start.** A standing start occurs when the vehicles are stationary on their appropriate grid positions, with engines running, when the starting signal is given. Timing shall commence when the starting signal is given. The starting line is the line in relation to which the position of each vehicle is fixed prior to the start.

(b) **Rolling start.** A rolling start occurs when the vehicles are moving at the moment the starting signal is given. To achieve a rolling start the competitors may be led by a Pace Car until the starting signal is given. All rolling starts must be in a 2 x 2 or 1 x 1 grid formation. The start line is the line on the crossing of which the timing commences.

12.9.12. Starting positions shall be notified at least 30 minutes before the start, except when the finishing order in one event affects the starting positions in a subsequent event scheduled to start less than half an hour later. In such instance the starting positions shall be notified as soon as practicable.

(i) Starting positions will be displayed on the Official Notice Board.

(ii) Any appeal concerning starting positions must be lodged within 30 minutes of their notification. Where the exception given in 12.9.12. applies, any appeal must be lodged not less than 10 minutes before the subsequent start.

(iii) Each car will be allocated its pre-determined position on a starting grid. It will be the responsibility of the driver to place his car in the correct position, unless instructed not to do so by an official specifically appointed to control the start.

(iv) It is not permitted to change tyres between leaving the assembly area and the start of the race, except in the case of force majeure (puncture, obvious damage) or if the Clerk of the Course states that the track is not completely dry. No artificial tyre heating or heat retaining devices may be used during this period.

(v) The pit exit will be closed 30 seconds after the last able car of the assembled cars leaves the entry point on to the circuit, and after this time any cars and drivers exiting the assembly area will be required to start from the pit lane after the last car has passed the pit lane exit at the start of the race. Once the countdown has commenced any car still in the pit lane or assembly area must start at the back of the field at the commencement of the green flag lap or race start, whichever timing is appropriate as deemed by the Championship Regulations or the Clerk of the Course.

12.10. Visual warnings will be displayed as per Supplementary Regulations/ Championship Regulations and/or Final Instructions. These visual warnings may be supplemented by sound signals.

12.10.1. If through unforeseen circumstances the formation lap cannot commence at the appointed time after the display of the one-minute signal, drivers will be notified by display or a "Start Delayed" board. Engines may then be stopped but only on the instructions of the Clerk of the Course.

12.10.2. If a "Start Delayed" signal is given, the starting procedure will be recommenced by the display of the one-minute warning, and so on.

12.10.3. For all races with a countdown of one three minutes or less, officials and drivers are the only persons allowed on the grid.

12.11. For all starts the driver will be seated in the car and engines will be running.

12.11.1. Unless the SRs specify that engines must be stopped on arrival at the starting grid, no penalty will be applied for failing to stop engines. Engines not already running will be started at the one minute signal, the method of starting being in accordance with the appropriate Technical Regulations.

12.11.2. Any driver in position on the grid but unable to take part in the start shall indicate his predicament by raising an arm vertically or opening the door. Marshals should warn other drivers by means of a Yellow flag. These cars will be started after the competitors have left the grid.

12.12. For all categories of cars that allow slick tyres to be used the start will be preceded by a formation lap. Following the showing of the 30 second signal, the starter will release the cars by displaying a green flag. The cars will keep in grid formation for this lap and the pace will be set by the pole position driver. No practice starts may be executed during the course of this lap. At the end of this lap, the cars will return to their grid positions and stop with their engines running.

12.12.1. (A five second board will be used to indicate that the grid is complete, then approximately 5 seconds after this board is withdrawn the red lights will be switched on and between a further 2 to 7 seconds the red lights will be extinguished to indicate the start of the race.

12.12.2. The order to start will be given by signal lights or a starting flag:

(a) Red lights being extinguished for both a standing start and rolling start

(b) Downward movement of the National flag where the use of start lights is not possible. All competitors must be briefed on this method of starting when this is not the usual procedure.

12.12.3. A grid may be formed in two parts allowing the first part of the grid to be started in advance of the second. The signal lights, or starting flag, will be used to start the first part and the second part started by use of a starting flag alone. For any circuit up to and including 2 miles in length a time delay of 10 seconds is mandatory to separate the grid. For any circuit over 2 miles in length the time delay, between the two grids, will be no less than 10 seconds and no more than 20 seconds. All competitors must be made aware of this start procedure through Supplementary Regulations (where possible) or Final Instructions, whenever this method of starting is used.

12.12.3.1. Following release of the first part of the grid, should an obstruction for the second race start appear, the race must immediately be red flagged.

12.12.4. A second race, of the same status, may run concurrently but only from a single start up to the maximum number permitted by the Track Licence.

(i) At the end of the specified duration of the shorter race all competitors will be signalled, by the display of a white board measuring at least 80cm x 60cm with a chequered border and bearing the legend 'Race Part One End'.

Upon display of this signal the shorter race competitors must safely enter the pit lane, ensuring that they do not impede those cars which are continuing to race for the longer period.

The timing of cars in the shorter race will conclude when the final competitor, in this shorter race, passes the board on the finish line.

(ii) There must be a minimum of 30 minutes between the end of each race for Endurance races (9.1) and no less than 15 minutes for any other races.

(iii) No vehicle is eligible to compete in both races, however a driver competing in an Endurance race may do so.

(iv) A drivers briefing for all competitors is mandatory and the board to be used (as specified in 12.12.4.(i)) must be shown to all competitors during the briefing.

False Start

12.13. A false start occurs when a driver under Starter's orders is either:

(a) in an incorrect position on the grid, or

(b) forward from the prescribed position, or

(c) moving at the time that the red lights are extinguished or

(d) in the case of a rolling start fails to maintain his correct station, or accelerates early or unevenly.

Penalty for a False Start (12.13)

12.14. Unless the Regulations provide for a different penalty the driver concerned shall be penalised by the addition of 10 seconds to the time taken by him to complete the course. This penalty must immediately be notified to all competitors by a signal board, and to his pit or representative. This penalty will not incur penalty points.

Stopping a Race

12.15. Any race can be stopped at the sole discretion of the Clerk of the Course by ordering the waving of the Red flag at the Start/Finish line. Competitors will be warned that the race has been stopped by the simultaneous waving of the Red flag at all Flag Marshalling Posts This may be supplemented by the showing of red lights at the start line and around the circuit.

12.15.1. Any race stopped before the leader has completed two laps will be declared a "No Contest" and available cars will restart from their original grid positions.

12.15.2. Any race stopped after the leader has completed more than two laps but less than 75% of its duration will be considered as the first part of the race. Cars will be restarted from a grid set out in the finishing order of this first part, which shall be based upon the order of crossing the finish line at one lap less than the number of laps completed by the leader at the time of first showing the Red Flag. Only cars which are proceeding under their own power, in accordance with 12.24.3(j) at the showing of the Red Flag will be classified in this first part (12.16 also applies).

12.15.3. The result will be the order of finishing at the end of the restarted race, unless Championship Regulations specify otherwise. The result will list all competitors who took the start in the race even if they did not take part in the restarted race and will use the first part for purposes of establishing lap records and point scoring where applicable (12.16 also applies).

12.15.4. Any race stopped after the leader has completed 75% of its duration may be considered to have finished, unless the Clerk of the Course, in consultation with the Stewards of the Meeting, deems it appropriate to restart the race. The result will be based on the order of crossing the finish line at one lap less than the number of laps completed by the leader at the time of the first showing of the Red Flag. Only cars which are proceeding under their own power, in accordance with 12.24.3(j), at the showing of the Red Flag will be classified. If restarted 12.15.2. will apply.

12.16. In the interval between stopping and restarting the race cars may return to the pit area for repairs. They may not return to the grid but may join from the pit lane after all the other cars have started. Non-runners at the time of stopping must return to the pit lane and may restart from the pit lane behind those referred to above if approved to do so by a Scrutineer. No work may be carried out on the grid unless on grounds of safety and with the approval of a Motorsport UK licenced Scrutineer. The Clerk of the Course may order that the duration of the second part or re-run of any race shall be of a shorter distance than originally scheduled, or may be abandoned altogether.

Track Regulations

12.17. Any driver intending to leave the course, or to enter the pits, shall signal his intention in good time and shall satisfy himself that it is safe to do so.

12.18. The driver of any car leaving the track because of being unable to maintain racing speed should signal the intention to do so in good time and is responsible for ensuring that the manoeuvre is carried out safely and as near as possible to a point of exit.

12.19. Should a car stop somewhere other than in the pit lane it must be moved as soon as possible so that its presence does not constitute a danger or hinder other drivers. If the driver is unable to move the car, marshals may assist. If such assistance results in the driver re-joining the race, this must be done without committing any breach of the regulations and without gaining any advantage.

12.20. No vehicle able to proceed under its own power shall be stopped either on the track or the verges of the course but shall proceed to the pits or paddock unless in doing so causes a hazard to other competitors.

12.21. A car alone on the track may use the full width of the track. However, as soon as it is caught by a car which is about to lap it the driver must allow the faster driver past at the first possible opportunity. If the driver who has been caught does not seem to make full use of the rear-view mirrors, flag marshals will display waved blue flags to indicate that the faster driver wants to overtake. Any driver who appears to ignore the blue flags will be reported to the Clerk of Course.

12.21.1. Overtaking, according to the circumstances, may be carried out either on the right or on the left. In response to each attempted overtaking manoeuvre no more than one change of direction to defend a position is permitted. Any driver moving back towards the racing line having earlier defended his position off-line should leave at least one cars width between his own car and the edge of the track on the approach to the corner. However, manoeuvres liable to hinder other drivers, such as deliberate crowding of a car beyond the edge of the track or any other abnormal change of direction, are strictly prohibited. Any driver who appears guilty of any of the above offences may be reported to the Clerk of Course.

12.21.2. Drivers must use the track at all times and may not leave the track without a justifiable reason. For the avoidance of doubt:

(a) The white lines defining the track edges are considered to be part of the track.

(b) A driver will be judged to have left the track if any wheel of the car goes completely beyond either the outer edge of any kerb or the white line where there is no kerb.

12.21.3. Should a car leave the track for any reason and without prejudice to 12.21.4. below the driver may re-join. However, this may only be done when it is safe to do so and without gaining any advantage.

12.21.4. Causing a collision, repetition of serious mistakes or the appearance of a lack of control over the car (such as leaving the track) will be reported to the Clerk of Course and may entail the imposition of penalties up to and including the disqualification of any driver concerned.

12.21.5. It is not permitted to drive any car unnecessarily slowly, erratically or in a manner deemed to be potentially dangerous to other drivers at any time.

12.22. Breaches of 12.21.2 may be reported and/or determined only by:

(a) A duly appointed Judge of Fact and/or

(b) Senior officials through the use of suitable equipment under the control of the organisers.

12.22.1. Breaches of 12.21.2 may be penalised using the following:

(a) In qualifying if the lap on which the breach occurred is faster than any previous lap then that lap time should be disqualified. Note should be made on the result sheet of any times disqualified.

(b) During races the following scale of penalties should be applied:

1st breach – no penalty

2nd breach - warning flag

3rd breach – 5 second penalty added to race time

4th breach – 10 second penalty added to race time

5th breach – drive through penalty (12.26.(h))

6th breach – black flag

Care should be taken to ensure that all signals (flag and board) must have been displayed to the driver concerned before moving up the penalty scale. All penalties applied should be noted upon the result sheet.

12.23. No competing vehicle shall be driven in the reverse direction of the track except for the minimum distance to remove it from an unexpected situation and then only under official supervision.

Flag Signals

12.24. Flag signals shall be in accordance with the following:

12.24.1. Each Flag Marshalling Post shall be provided with a Hazard Area Board (not applicable at Kart Circuits) and the following flags: Yellow, Yellow and Red, Green, Blue, Red, White and Purple (if required), and shall be staffed by marshals who are competent in their use. The Clerk of the Course shall be provided with, or have under his direct control, a Red flag, a Black flag, a Black and White flag split diagonally, and a Black flag with an Orange disc, together with means for clearly displaying a competing car's number should it be necessary, as well as penalty boards. The National flag and a Black and White chequered flag shall be available at the start and finish line or lines for appropriate use.

12.24.2. All marshals' posts shall show a Green flag during the first lap of each practice session, and during each formation lap.

12.24.3. Officials' Signals will be conveyed to drivers by the following flag signals which may be displayed by an appropriately coloured panel to which the competitor number may be attached:

(a) Red/Green lights or National flag: Race start.

(b) Blue flag – Stationary: Another competitor is following close behind.

(c) Blue flag – Waved: Another competitor is trying to overtake.

(d) White flag: A service car or slow moving car is on the circuit. The white flag will be waved to indicate the sector of the track that the slow moving vehicle is in, and held stationary whilst the vehicle is in the next sector.

(e) Yellow flag – Waved: Danger, slow down sufficiently to ensure that full control of the vehicle can be retained. No overtaking.

(f) Yellow flag – Double Waved: Great danger. Slow down considerably. Be prepared to suddenly change from the projected racing line, or take other evasive action including stopping if necessary. No overtaking. (This signal may be supplemented or replaced by flashing yellow light(s), as an added warning.)

(g) Yellow flag with Red Stripes – Stationary: Slippery surface ahead.

(h) Yellow flag with Red Stripes – Waved: Slippery surface imminent.

(i) Green flag – Waved: All clear, at the end of a danger area controlled by yellow flags. Also used to signal the start of a formation lap and shown at all posts during first lap of each practice session and during each formation lap.

(j) Red flag: Immediately cease driving at racing speed and proceed slowly, without overtaking, and with maximum caution to pits or start line obeying marshal's instructions and being prepared to stop should the track be blocked.

(k) Black flag with Orange disc displayed with the competitor's number: Notification of apparent mechanical failure or of a fire which might not be obvious to the driver. The car concerned must call at its pit for repairs on the next lap.

(l) Black and White Rectangular flag split diagonally and displayed with the competitor's number: A warning, to the driver that his behaviour is suspect and that he may be Black-flagged on further reports.

(m) Black flag displayed with the competitor's number: The driver must stop at his pit on the next lap of receiving the signal and report to the Clerk of the Course. A penalty of disqualification may be enforced by display of the Black flag.

(n) Black and White Chequered flag: End of Race or Practice.

(o) Hazard Area Board: A warning of a hazard that was not present when the practice/race commenced.

(Black on yellow background)

12.24.4. At an incident where the track is obstructed, or marshals are working at the trackside, the following signals will be used:

(a) A WAVED Yellow flag at the post before a DOUBLE WAVED Yellow flags. (This waved yellow flag may also be supplemented or replaced by flashing yellow warning lights).

(b) A double waved Yellow flag at the post immediately preceding the incident. (These waved yellow flags may also be supplemented or replaced by flashing yellow warning lights).

(c) A waved Green flag at the post immediately after the incident.

(d) If the incident is well off the track and marshals are not working at the trackside, the incident may be indicated by a single waved yellow flag, followed by a waved green flag, or by a Hazard Area board.

(e) The Code 60 flag (Purple)

The Code 60 flag may be brought into operation to neutralise a race at the sole decision of the Clerk of the Course provided that all flag points are in communication with race control, its use will have been confirmed in the SR's, and its operation in accordance with Appendix 4, Operation of Code 60 and explained in the drivers briefing.

12.24.5. Overtaking or not slowing down is an offence from the point of passing the Yellow flag(s) until the Green flag is passed.

12.24.6. If a hazard has been indicated by Yellow flags as above, the flags may be withdrawn, even though the hazard remains. It will then be indicated by a Hazard Area board at the flag post preceding the hazard. It is then the competitor's responsibility to take appropriate care.

12.24.7. When a race is stopped by the Red flag, the method of re-starting or deciding the result will be in accordance with 12.15.2, 12.15.3., 12.15.4. and 12.16.

12.24.8. Other than the Starter's Flag the minimum size for any flag or appropriately coloured signal panel (12.24.3.) is 75cm x 60cm. (N.B. International Regulations require the Red flag to be 80cm x 100cm minimum).

12.24.9. Once the Black and White chequered flag has been displayed the event is over, and may not be restarted.

12.24.10. If during any race no car crosses the control line under its own power during a period of five minutes the end of race signal shall be displayed and the results announced on the relative positions of cars at the time they last crossed the control line under their own power.

Pit and Paddock Regulations

12.25. During the event drivers may receive assistance only:

(a) At the pits, or

(b) From Officials.

12.25.1. Refuelling and work upon the cars, other than by a driver or officials, may only be carried out at the pits or in the paddock (E.7.4). Unless expressly permitted by the Supplementary Regulations refuelling may not take place during a practice session, qualifying session or race.

12.25.2. A driver shall vacate the car and the engine be stopped throughout any refuelling operation. Refuelling within the pit lane may only be carried out using either a churn of no more than 25 litres capacity equipped with a self-seal connection and closed loop breathing system or a refuelling rig in compliance with FIA requirements. In addition the entrant shall ensure that throughout refuelling one person shall stand by the car with a fire extinguisher at the ready. Any personnel refuelling the vehicle or on standby with a fire extinguisher during a pit stop must wear a safety suit in accordance with K9 and fire resistant balaclava and gloves in accordance with FIA regulations.

12.25.3. Not more than five gallons of fuel may be kept in any pit unless the SRs allow otherwise. In all cases where an additional quantity of fuel is authorised, the container and the method of delivery to the car must be specified in the SRs.

Storage of fuel is only permitted in containers having a screw or other approved safety cap and complying with the Law and local Fire Regulations.

12.25.4. If any fuel is stored in a pit, the entrant of the car using that pit shall ensure that an effective fire extinguisher is kept adjacent to such fuel.

***12.25.5.**

(a) A maximum of one timekeeper and one person detailed by the entrant for the purpose of signalling may be on the pit wall/signalling area at any time unless the Supplementary Regulations stipulate otherwise.

(b) with the exception of (a) above, only the fire cover attendant specified in 13.1.2 12.25.2., the driver and two other persons may be on the course/in the pits in attendance on one car, unless the Supplementary Regulations or Championship Regulations state otherwise.

12.25.6. Each driver shall acquaint himself with the regulations of the pit and paddock area relevant to the course on which the competition is held.

12.25.7. The pit lane exit will be closed immediately upon the chequered flag being displayed to indicate the end of any practice, qualifying or race or upon the display of the red flag at any time.

12.25.8. Except while on the track no competing car shall be driven at a speed exceeding 10mph without the specific permission of the Clerk of the Course.

Practice and Race Penalties (C2.1.6)

'Stop-Go' and 'Drive Through' Penalties

12.26. If the Regulations for an event, or the relevant Championship Regulations, specifically provide for a 'Stop-Go' penalty or a 'Drive Through' penalty, the following procedure will be adopted:

(a) When the Clerk of the Course imposes a 'Stop-Go' or 'Drive Through' penalty he will immediately instruct the appropriate official to display the black flag and the competitor's number, together with a board which says 'Stop-Go Penalty' or 'Drive Through Penalty'. The relevant driver may cover no more than three complete laps before entering the pit lane to take the penalty.

(b) The Clerk of the Course will advise the Chief Pit Marshal, who in turn will notify the team concerned in writing where possible.

(c) The relevant driver who receives a 'Stop-Go' penalty must go directly to the designated area, as detailed in the Final Instructions, without stopping elsewhere in the pit lane. He will remain there for the period of the time penalty imposed. After the signal indicating the completion of the time penalty is given, he shall re-join the race without stopping in the pit lane, which includes the relevant drivers' pit. Whilst a car is stationary in the designated area as a result of incurring a 'Stop-Go' penalty, it may not be worked on. However, if the engine stops, it may be started after the penalty period has elapsed. If the driver is unable to start his car without assistance, other than with the use of external batteries, it must be moved to its pit by its mechanics.

(d) The relevant driver who receives a 'Drive Through' penalty must enter the pit lane and re-join the race without stopping.

(e) At all times the driver will drive in the pit lane in a safe manner, obeying all signals and the speed limit.

(f) Unless the driver has already entered the pit lane for the purposes of serving the penalty, prior to display of the Safety Car board at the Start/Finish line, the driver may not carry out the penalty until such time as the car subject to penalty passes the Green Flag at the Start/Finish line at the end of the Safety Car deployment. Any laps carried out behind the Safety Car will be added to the three- lap maximum.

(g) Any breach, or failure to comply with this procedure may result in additional penalties, including disqualification, being imposed, which may incur penalty points.

(h) Should either a 'Stop-Go' or 'Drive Through' penalty be imposed and notified during the last five laps, or after the end of the race or, depending on the case for duration races during the last 10 minutes, or cannot be imposed for operational reasons, an alternative time penalty of no less than 30 seconds and no more than one minute shall be added to any penalty period and the elapsed time of the car concerned.

Loss of Lap Time

12.27. The Clerk of the Course and/or the Stewards of the Meeting may disallow a lap time/times for contravention of the Regulations during qualifying.

Results

12.28. In the case of a race over a set distance the winner shall be the competitor who covers that distance in the least time and the end of race signal will be displayed when the first competitor completes the set distance.

12.28.1. In the case of a race for a set time, the winner will be the competitor who covers the greatest distance in that time, and the end of race signal will be displayed at the end of the set time, unless the SRs specify otherwise.

12.28.2. After receiving the end of race or practice signal, cars will maintain station and proceed at a reduced speed, enter the pit lane and proceed directly to Parc Fermé unless the SRs specify something to the contrary.

12.28.3. The Parc Fermé area is defined in Section B and all vehicles must be taken directly to this area, including those who did not complete the practice or race unless advised to the contrary by an Eligibility Scrutineer Technical Commissioner or Chief Scrutineer. Only the Driver and Officials are granted access to Parc Fermé, unless a team member is requested by the Scrutineer to be present.

12.28.4. With the exception of 9.1.5., unless the SRs or the Championship Regulations state otherwise, to be classified as a finisher in a race, only cars which have covered at least 80% of the distance covered by the class winner and which cross the Finishing Line, not in the Pit Lane, under their own power within four minutes after that of the overall winner will be classified. Should this percentage not result in a full number of laps, the decimals will be disregarded.

12.28.5. Should the end of the race signal inadvertently or otherwise be displayed before the leading car completes the scheduled number of laps – or before the prescribed race time has been completed – the race will nevertheless be deemed to end at the moment the signal is given. If the chequered flag is given to the leader, then the result should be drawn accordingly, but if the chequered flag is given to a competitor other than the leader then the result should be given at the end of the last completed lap of the leader. Should the end of the race signal be inadvertently delayed, the race will nevertheless be deemed to finish at the correct moment and competitors be classified accordingly.

12.28.6. For any race that has been run, in its entirety, under Safety Car conditions shall be declared null and void.

Technical Regulations

In addition to complying with Section J and the appropriate Formula Regulations where applicable, all vehicles competing in Races must:

Chassis

13.1.1. Have a bulkhead between any fuel tank and filler and the driver/passenger compartment sufficient to prevent the passage of flame or liquid. Where a fuel tank constitutes part of the bulkhead between the passenger and luggage compartments, an additional bulkhead must be fitted. Additional fuel tank protection may be required for open or single seater cars (see J5.2.2). Cars of periods A to F are exempt from this requirement.

13.1.2. Not have any skirts or intermediary devices bridging the gap between the underside of the chassis/body of the vehicle and the road/track. Ground clearance to be as per definition 4cm minimum *unless stated otherwise in SRs.*

13.1.3.

(a) There must be substantial towing eyes securely fixed to the main structure of the vehicle, front and rear, within the confines of the body to enable the vehicle to be moved. Cars of periods A to F and single seater racing cars are exempt from this requirement subject to a suitable towing point being clearly identified. Towing eyes must have a minimum internal diameter of 60mm. Towing eyes/towing points should be painted a contrasting bright colour (dayglo red, orange or yellow, marked with an arrow and the word "tow").

(b) The following configuration and specifications are strongly recommended:

Vehicles to be equipped with two front and two rear towing eyes positioned equally either side of the longitudinal centre line. The towing eyes to be made of steel wire rope of at least 6mm diameter with a 6x19 wire core. Each towing eye to have a breaking-strain of at least 2 tons and allow the passage of a cylinder with a diameter of 60mm. The towing eye to be fixed to a structural part of the chassis with a minimum of M10 (Grade 8.8) fixings or looped around a structural chassis part, the inner part must be flexible in order for the towing eye to be retracted inside the bodywork profile. Towing eyes should be situated 25mm forward of the adjacent bodywork with clearance of 100mm above and below to enable recovery crews to attach straps and shackles. A "pull-cord" to be attached to the towing eye to enable the marshals to access it. The end attached to the chassis may be either 'thimble' or 'open-loop' style.

13.1.4. Have substantial underbody protection covering any area of fuel tank if exposed to running damage. (Applicable mainly to tanks of plastic construction.)

Body (including Aerodynamics)

13.2.1.

(a) Have any windscreen if of glass, of laminated type only.

(b) Rear screens to be clear, or may be tinted such as not to significantly affect through vision (in or out) or distort the colours of signal flags or lights.

13.2.2. If advertising is allowed on the windscreen not have the advertising obscuring the driver's vision. Advertising on other transparent surfaces is prohibited unless specified in the Championship Regulations. The driver's name may be displayed on the rear side and/or the rear screen in letters not exceeding 10cm high.

13.2.3. Have any cover over the passenger's compartment alongside the driver composed of foldable material, or if of a rigid material the edge adjacent to the driver to have a minimum vertical dimension of 40mm. Where the cover is of a rigid material the edge is to be protected with non-flammable padding (K1.3.6, K1.6.6). Cars of Periods A to F exempt if proven that original manufacturer's design is maintained and non-flammable padding is fitted.

13.2.4. Have any undertray provided with drainage holes to prevent accumulation of liquids.

13.2.5. If a closed car have:

(a) Effective means of ventilating the passenger compartment.

(b) Means of access on either side of the passenger compartment operable from the inside and the outside and sufficient in size to remove the occupant without impedance by door locking devices.

(c) It is recommended to have the driver's window closed whilst racing – or that suitable netting should be installed in the window opening to act as a restraint to stop the driver's arms or head inadvertently emerging from the vehicle.

13.2.6. Other than a road going car, have bonnet security clips fitted.

Seating

13.3. Not carry anyone other than the driver whilst on track.

Brakes

13.4. Be equipped with brakes which comply with Statutory Requirements as to the construction and use of Motor Vehicles, or if there is no mechanical system available for applying braking effort to at least two wheels, there must be two hydraulic systems so that, in event of failure of one system, braking is maintained on at least two wheels.

(a) Vehicles constructed after 1930 must have brakes on all wheels.

(b) The braking system on all vehicles must be capable of demonstrating its efficiency without impairing the driver's control when tested immediately prior to an event.

(c) It must be possible under all conditions, running or stationary, for 25% minimum braking effort to be applied by the driver through the braking system to each axle. (Vehicle models introduced prior to 31.12.65 are exempt from this requirement.)

(d) Brake balance adjusters must not be available for adjustment during running if they contravene (c).

13.4.1. Not be fitted with Anti-Locking braking devices unless a Production Car with the device fitted as standard equipment by the manufacturer.

Wheels

13.5.1. Have any spare wheels securely fastened in position (a spare wheel need not be carried unless specified in SRs).

13.5.2. Have all nuts securing road wheels, excepting those of centre-lock type, of steel and in thread contact over a minimum length of 1½ bolt/stud diameters. Extended or composite wheel bolts/studs are prohibited. Cars of periods A to D are exempt from this requirement.

Tyres

13.6. Use only tyres as specified by Tyre Regulations. Remould or retread tyres are prohibited unless listed in Section L or the vehicle was constructed prior to 1940.

Oil Systems

13.7.1. Have any oil tank which is situated outside the chassis or main structure of the vehicle, suitably covered with a protective coating (e.g. GRP). On rear engined vehicles no part of the oil tank may be located to the rear of the gearbox casing. Cars of period A to D are exempt from this requirement.

13.7.2. Have any engine oil tank breather or overflow tube venting into atmosphere, led into catch tanks which have a minimum capacity of 2 litres. For engine capacities in excess of 2 litres the catch tank capacity must have a minimum capacity of 3 litres.

13.7.3. Have catch tanks of translucent plastic or with a transparent inspection panel, capable of being readily emptied. In any parallel system of catch tanks, each tank must not be less than half the minimum required capacity. Containers of cross section of less than 46 sq cm are prohibited.

13.7.4. Positive crankcase ventilation systems breathing fluids directly into the inlet manifolds may be accepted as an alternative to catch tanks, but breather systems and catch tanks must be used in such a way as to prevent oil from spilling onto the road/track.

Fuel Systems

13.8. These must be equipped with an effective method of stopping fuel supply and operable by the Driver when normally seated. This to be combined with or located adjacent to the internal ignition cut-off switch.

Electrical Equipment, Circuit Breakers and Ignition Components

13.9.1. Vehicles must be equipped with an externally operated circuit breaker having positive ON-OFF positions clearly marked (K.8). An external circuit breaker is not mandatory on open cars of periods A to F, but is strongly recommended. The internal ignition cut-off and fuel pump isolation system(s) must be operable by the Driver when normally seated irrespective of whether a safety harness is worn or not.

13.9.2. Not have any ignition components which may run at a voltage exceeding 60V located in the cockpit area in racing cars. Cars of periods A to E are exempt from this requirement.

13.9.3. With the exception of Racing Cars, Clubmans Cars, 750 Formula, Legends Cars and Period A to E, all vehicles must be equipped with a pair of brake lights equally disposed about the vehicle centre line, on the same horizontal plane with a minimum of 300mm between them and which are directly operated by the braking system without any time delay.

Safety

13.10.1. Be fitted with a safety roll-over bar (ROPS) complying with Motorsport UK requirements as specified in Section K except for vehicles of Periods A - E inclusive. It is strongly recommended that all vehicles be fitted with safety roll-over bars.

13.10.2. Be fitted with currently FIA Homologated safety harness to be worn at all times by the driver during training, practice and competition unless the vehicle was constructed in Periods A to E.

13.10.3. If fitted with lightened non-standard doors the vehicle must be fitted with a horizontal safety bar across the door(s) aperture below the line of the window and at a suitable height to protect the driver. This must not be integral with the door.

13.10.4. Have any forward facing lamps of more than 32 sq.cm2 in surface area adequately protected and secured in case of glass breakage.

13.10.5. Not pass fluids through any chassis tubes in space frame vehicles.

13.10.6. Glass sunroofs are not permitted. Sunroofs may be of a non-shattering solid material other than glass. The sunroof aperture may be closed by solid material permanently fitted in place.

Exceptionally, vehicles fitted with fabric, folding type sunroofs are permitted providing that they are fitted with a full roll cage with ROPS as in K.1.6.1 or K.1.6.2. Any sunroof must be firmly secured in the closed position.

13.10.7. Vehicles of Periods A-F be equipped with a fire extinguisher in accordance with K.3.2. Other vehicles to be equipped with a fire extinguisher in accordance with K.3.1.

13.10.8. A red light in compliance with K.5.1 must be fitted.

13.10.9. The Technical Regulations of any Championship or Series for any new design of Single Seater Racing Car Are subject to approval and must be in compliance with the Vehicle Technical requirements published by Motorsport UK.

VBOX MOTORSPORT

The Quickest Way To Go Faster

"In my experience, drivers benefit most from reviewing 'intelligent' video which has information overlaid on it.

With **VBOX**, this video is automatically synchronized with data, able to be compared side by side to a GPS position, allowing drivers to quickly and expediently coach themselves, towards better performance in less time."

Peter Krause, Professional Racing Coach,
Virginia International Raceway.

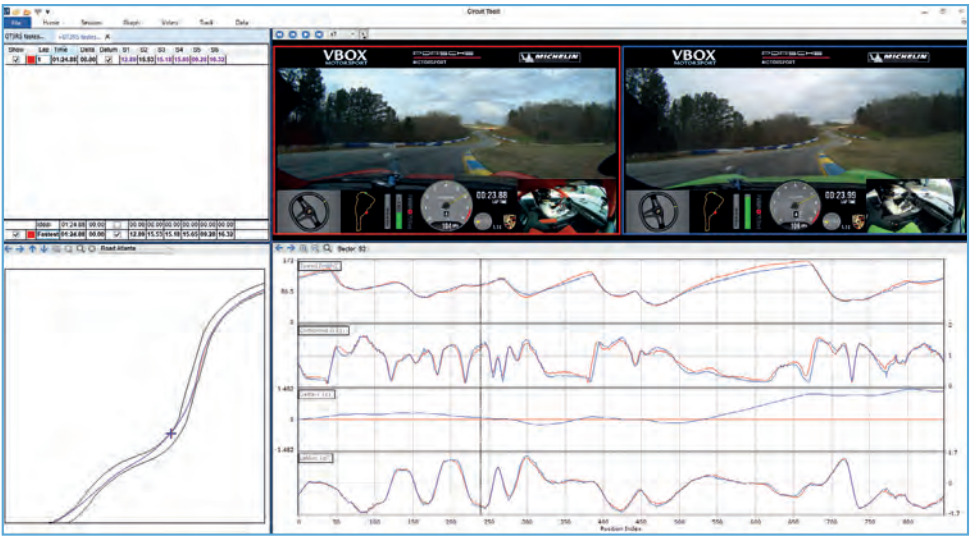

Professional racing drivers share their experience on advanced circuit driving techniques in our FREE eBook:
vboxmotorsport.co.uk/ebook

vboxmotorsport.co.uk

Miscellaneous

13.11.1. Be fitted with at least one mirror of minimum surface area 50sq.cm securely mounted and positioned to give a clear view to the rear. The edges of mirrors must be protected by a suitable cover to reduce the possibility of injury in the event of an accident.

13.11.2. Be presented at Scrutineering with all steering mechanism, suspension linkages and flexible brake lines in clean condition.

13.11.3. If a closed car or an open car required to run as 'road going' with a windscreen, have an operative windscreen wiper.

13.11.4. If fitted with a towing ball-hitch, have it removed when competing.

13.11.5. The following parts of Section K remain unmodified in this section, unless modified in the Formulae Regulations Suspension; Transmission; Cooling; Exhausts.

Formulae Regulations

These are available from the Technical Department at Motorsport UK.

Truck Racing

14. Specific regulations are available for Truck Racing. For further details contact Motorsport UK.

14.1. Unless the nominated Clerk of the Course is a Licensed International 'A' CofC, the nomination must be approved by Motorsport UK.

Appendix 1: Charts and Diagrams

Chart 5

FLAG SIGNALS

Blue
Overtaking flag

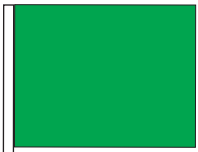

Green
Road clear

White
Service car or slow moving vehicle

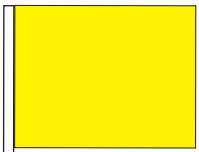

Yellow
Danger

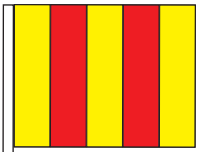

Yellow/Red
Slippery surface

Red
Cease racing

Yellow/Black quartered
Slow down, no overtaking (karting only)

Purple
Code 60
Race Neutralised

Black/White diagonal
Warning flag

Black, Orange disc
Mechanical failure

Black
Report to CofC

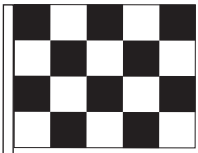

Black/White chequered
End of race

Green, Yellow chevron
False start (karting only)

Appendix 2: Single Seater Dimensions

Drawing number 19.17

Single Seater Dimensions

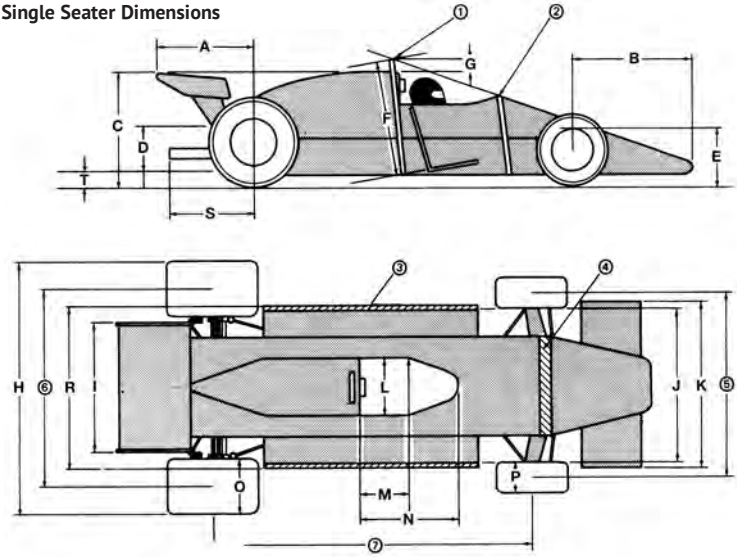

1. Safety roll-over bar
2. Substantial Support structure
3. Crushable structure
4. Substantial structure
5. Front track
6. Rear track
7. Wheelbase (unless other stated in SRs)

Notes: Maximum height is measured with the driver aboard.
Maximum height excludes safety roll-over bar on which there is no maximum height.
FIA substantial support structure (2) and (4) apply only to certain International Formulae

Single Seater Dimensions
All dimensions in cm
Refer to Drawing

(A)	Maximum rear overhang from rear wheel axis unless specified otherwise	100
(B)	Maximum front overhang from front wheel axis	N/A
*(C)	Maximum height measured from the ground	90
(D)	Exhaust height measured from the ground	
(E)	Maximum body height in front of front wheels	
(F)	Minimum safety roll-over bar length in line with drivers spine	92
(G)	Minimum allowed helmet clearance	5
(H)	Maximum width	N/A
(I)	Maximum rear aerofoil width	95
(J)	Maximum body width behind front wheels	N/A
(K)	Maximum nose width	N/A
(L)	Minimum cockpit opening	45
(M)	Minimum cockpit parallel opening length	30
(N)	Minimum cockpit overall opening length	60
(O)	Maximum rear wheel width	N/A
(P)	Maximum front wheel width	N/A
(R)	Maximum width including crushable	N/A
(S)	Maximum exhaust length from rear wheel axis	–
(T)	Minimum ground clearance	4
(7)	Minimum wheelbase (unless stated otherwise in SRs)	183

(* Except for within 450mm rearward of the front face of the ROPS and for a maximum of 150mm either side of the centre line where bodywork may not be more than 25mm higher than the upper surface of the ROPS.)

Appendix 3: Operation of Safety Car

1.1. The Safety Car will be brought into operation to neutralise a race upon the sole decision of the Clerk of the Course. The Safety Car will be driven by an experienced circuit driver and will carry an observer capable of recognising all competing cars and who is in permanent radio contact with race control (G5.2.17).

1.2. The Safety Car, yellow/amber lights illuminated, will normally join and exit the circuit from the pit lane and the Safety Car boards will be shown initially from the start/finish line. If these locations are to be varied specific written instructions and verbal briefings will be issued detailing the exact locations to be used.

1.3. On the order from the Clerk of the Course, the Safety Car will join the circuit with its flashing lights on, regardless of where the race leader is.

1.4. When the order is given to deploy the Safety Car a waved yellow flag and "SC" board will be displayed at the start/finish line. The waved yellow flags and "SC" boards will flow around the circuit in both directions, as an adjacent post displays both their waved yellow flag and "SC" board. This system may be supplemented by a message being simultaneously broadcast to all marshals' posts if such a communication system is available.

1.5. Flashing yellow lights may also be used at the start-line and at other points around the circuit.

1.6. All competing cars, when notified of the Safety Car intervention (by the flag signals, "SC" boards, or by any other means) will reduce speed and line up behind the Safety Car, no more than 5 car lengths apart, and maintaining the same speed as it. Overtaking or overlapping of any other competing car during a Safety Car intervention is forbidden. Overtaking of a Safety Car is forbidden unless the particular competitor concerned is signalled to overtake the Safety Car by the observer in the Safety Car.

1.7. When ordered to do so by the Clerk of the Course, the observer in the Safety Car will wave past any cars between the Safety Car and the race leader. These cars will continue at reduced speed and without overtaking until they reach the line of cars behind the Safety Car.

1.8. While the safety car is in operation, competing cars may enter the pit lane, but may only rejoin the track when signalled to do so and not when the safety car and the line of cars following it are about to pass or are passing the pit exit. A car re-joining the track must proceed at an appropriate speed until it reaches the end of the line of cars behind the Safety Car.

1.9. The Safety Car will remain in operation until at least the majority of competing cars on the circuit are lined up behind it.

1.10. When the Clerk of the Course calls in the Safety Car it will extinguish the yellow/amber flashing lights prior to exiting the circuit. This would normally be such that a minimum of 25% of a lap for circuits over 2 miles and 50% of a lap for circuits under 2 miles should be completed by the Safety Car with its lights extinguished.

1.11. Following the safety car extinguishing its lights, and prior to passing the green flag, the race leader will dictate the pace and, if necessary, fall more than five car lengths behind the Safety Car. In order to avoid the likelihood of accidents before the safety car returns to the pits, from the point at which the lights on the car are extinguished drivers must proceed at a pace which will not lead to the Safety Car being overtaken before it has entered the pit road, involves no erratic acceleration or braking nor any other manoeuvre which is likely to either endanger other drivers or impede the restart.

1.12. As the Safety Car is entering the pit entry road, the green flag will be displayed at the start/finish line and the "SC" board withdrawn. Following this display of the start signal yellow flags and "SC" boards at the marshals posts will be withdrawn and be replaced with a waved green flag for one lap. The waved green flag will flow around the circuit in both directions, as an adjacent post displays their waved green flag. This system may be supplemented by a message being simultaneously broadcast to all marshals' posts if such a communication system is available. Overtaking or overlapping remains strictly forbidden until the start signal at the start/finish line is passed.

1.13. Each lap covered while the Safety Car is in service will be counted as a race lap unless specified to the contrary in Championship regulations.

1.14. Under certain circumstances the Clerk of the Course may ask the Safety Car to use the pit lane. In this case, and provided its yellow/amber lights remain illuminated, all cars must follow it into the pit lane without overtaking. Any car entering the pit lane under these circumstances may stop at its designated garage area.

1.15. Should it be necessary to stop a race during a Safety Car deployment the Safety Car, with all competing vehicles following, will pass through the red flag at the start/finish line, complete one further lap at reduced speed and then, once the Safety Car comes to a stop at a position indicated by the Safety Car observer (which will usually be either the grid or Parc Fermé), all competing cars must stop behind it unless otherwise directed.

1.16. In exceptional circumstances the following may apply:

(i) The race may be started behind the Safety Car.

In this case its flashing yellow/amber lights will be turned on at the two-minute signal.

This is the signal to the Entrants/Drivers that the race will be started behind the Safety Car and it will remain at the front of the grid during the remainder of the countdown.

When the Green Flag is shown at the Start/Finish Line, the Safety Car will leave the grid and all cars will follow in single file in grid order no more than 5 (five) car lengths apart.

The race will be deemed to have started when the Safety Car leaves the grid and the Green Flag is displayed.

(ii) Cars will leave the grid in single file grid order behind the Safety Car under the instruction of the Chief Start/Finish Line Marshal. Cars will remain in single file without overtaking, except that a car that falls behind may regain its grid position if the cars behind it could not avoid passing without unduly delaying the remainder of the field. In this case, Drivers may carefully overtake to re-establish their original starting grid order. If a car falls to the back of the grid, it must remain at the back of the grid.

(iii) Any car(s) delayed leaving the grid may not overtake another moving car if stationary after the remainder of the cars had crossed the line. In this case the car(s) shall remain at the back of the grid, in the order they left the grid.

(iv) A time penalty or Drive Through Penalty may be imposed on any Driver who, in the opinion of the Clerk of the Course, unnecessarily overtakes another Driver during these laps.

(v) The "SC" boards and Yellow Flags will be displayed at Marshals' Signalling Posts around the circuit until the Clerk of the Course withdraws
the Safety Car from use in accordance with Regulation 1.10, 1.11. and 1.12.

(vi) All laps undertaken in this start procedure will be deemed to be counted as race laps

1.17. Any car being driven unnecessarily slowly, erratically or which is deemed potentially dangerous to other drivers at any time whilst the safety car is deployed will be reported to the Clerk of the Course. This will apply whether any such car is being driven on the track, the pit entry or the pit lane.

Appendix 4: Operation of Code 60

The Code 60 Flag (Code 60) will be brought into operation to neutralise a race at the sole decision of the Clerk of the Course provided that all flag points are in direct communication with race control.

1.1. The order to display the flag will be given to flag points following a countdown of not less than 15 seconds and come into operation after an 'on air' countdown "5-4-3-2-1 Code 60 flag Code 60 flag".

1.2. On the order from the Clerk of the Course, the flag will be waved at the start/finish line and simultaneously at all points around the circuit. The flag will continue to be waved for a minimum of one lap and until all cars have visibly slowed down, following which the flag will then be held stationary until the Clerk of the Course withdraws the Code 60 in accordance with 1.6 below.

1.3. Yellow flags will continue to be waved at the incident but green flags will not follow.

1.4. All competing cars, when notified of the Code 60 intervention (by the flag signal, or by any other means) will release the throttle, gently reduce their speed to 60kmh and should remain behind the car in front.

Note: It is essential that drivers slow down avoiding sharp braking.

1.5. While the Code 60 is in operation, competing cars may enter the pit lane, but may only re-join the track when signalled to do so by an official/marshal.

1.6. When the Clerk of the Course orders withdrawal of the Code 60 there will be a radio message to all posts "prepare to go green in less than 30 seconds" and be withdrawn after a countdown "5-4-3-2-1 Green Flag, Green Flag". Code 60 will then immediately be replaced by a waved green flag. The waved green flag will be shown simultaneously at all posts.

1.6.1. Racing will resume as soon as the green flag is displayed.

1.7. Overtaking is strictly forbidden until the green flag is displayed. Any infringements may be penalised by a time penalty of 1 minute, or more.

1.8. Each lap covered while the Code 60 is in operation will be counted as a race lap unless specified to the contrary in Championship regulations.

Appendix 5:
Parade, Lead/Pace and Safety Car Specifications (G5.2.17)

A Safety Car may be used to control or neutralise a race in the event of an incident or a situation in which marshals or competitors are being subjected to such potential danger that the yellow flag is not sufficient protection, providing its use is detailed in SRs, or the Championship Regulations, and in accordance with Appendix 2. The Safety Car will also be used whilst a snatch is in operation at those venues not licensed for snatch operations.

1.1. When selecting a vehicle for use as a Safety Car consideration should be given to the vehicles suitability, and type of vehicles within the race (Convertible vehicles are not deemed suitable).

1.2. The Safety Car should be marked "Safety Car" in black letters on a white background (in letters of a similar dimension to those used for race numbers) on both sides of the vehicle and in letters as large and as a clear as is practicable on the rear of the vehicle in such a way that the purpose of the Safety Car is clear and unambiguous.

1.3. The Safety Car must be equipped with a minimum of two yellow/amber flashing lights securely situated on the roof of the vehicle. The vehicle must be equipped with safety belts.

1.4. It is recommended that Safety Cars be equipped with rollover protection and have fitted a 2.5kg fire extinguisher to be at the disposal of the driver or observer, for hand use.

1.5. It is recommended that Safety Cars have the decals removed or covered when on the public highway, and are driven in such a manner as not to bring the sport into disrepute.

1.6. The driver and observer must sign on as officials of the meeting.

1.7. No other personnel may be carried aboard the vehicle.

1.8. Helmets must be worn, but they must not impede communications between the observer and the driver or race control, (wearers of full-face helmets should use in-ear ear pieces).

1.9. Both the driver and observer must have arms and legs covered with suitable clothing (fire retardant overalls are strongly recommended).

1.10. Safety belts as fitted to the vehicle must be worn.

2. A Lead Car may be used to control the formation lap prior to a rolling start (12.13(b)). A Lead Car will not be used to neutralise a race.

2.1. The Lead car should be marked "LEAD CAR" in black letters on a white background (in letters of a similar dimension to those used for race numbers) on both sides of the vehicle and in letters as large and as clear as is practicable on the rear of the vehicle in such a way that the purpose of the Lead Car is clear and unambiguous. Safety Cars may also act as Lead Cars.

2.2. The Lead Car must be equipped with a minimum of two yellow flashing lights situated on the roof of the vehicle.

2.3. The Lead Car must be driven as required by G5.2.17. and crewed with an official acting as an observer who is capable of recognising all the competing cars and who is in permanent radio contact with Race Control.

2.4. Both the driver and the observer must have signed on as Officials of the Meeting.

2.5. Helmets must be worn, but they must not impede communications between the observer and the driver or race control, (full-face helmets may require intercoms).

2.6. It is recommended that Lead Cars have the decals removed when on the public highway and are driven in such a manner as not to bring the sport into disrepute.

3. A Parade Car may be used to control the formation lap prior to a standing start (12.1(a)).

3.1. A Parade Car is deemed to be a vehicle used only to lead the competing cars on their green flag/formation lap, when the start is to be a conventional standing start from the grid, and which will not be used to neutralise a race. Lead Cars and Safety Cars may also act as Parade Cars.

3.2. The Parade Car must have at least one yellow flashing light situated on the roof of the vehicle

3.3. The Parade Car must be driven as required by G5.2.17. and crewed with an official acting as an observer who is capable of recognising all the competing cars and who is in permanent radio contact with Race Control. Both the driver and the observer must have signed on as Officials of the Meeting.

3.4. It is recommended that Parade Cars have the decals removed or covered when on the public highway and are driven in such a manner as not to bring the sport into disrepute.

Appendix 6: Operations of Parades and Demonstrations

Details of the operation of parades and demonstrations can be found on the Motorsport UK website via the following link:

https://www.motorsportuk.org/resource-centre/clubs-organisers/

British Motor Sports Training Trust

This charitable trust was constituted by a Trust Deed first executed on the 19th May 1977, and it has been instrumental ever since in providing grant aid to assist with the safety training of volunteer motor sport officials and marshals as well as – through its Safety Development Fund – in providing further grant aid to assist safety related initiatives undertaken by Motorsport UK Registered Clubs and Recognised Groups in specific areas including those related to Event Safety and Venue Safety improvements, as well as the specialist work of Medical and Rescue Units and Recovery crews.

For further information regarding the work of the Trust, and details of the available grant categories – including guidelines on eligibility and how to apply – please see the Trust's website at www.bmstt.org

The British Motor Sports Training Trust is UK motor sport's own registered charity, and donations from organisations, clubs and individuals to help continue the work of the Trust are always most welcome.

Rod K Parkin, Chairman of the Trustees

British Motor Sports Training Trust

Motorsport UK, Bicester, OX27 8FY

The British Motor Sports Training Trust is a UK Registered Charity (No. 273828)

Specific Regulations for Rallying (R)

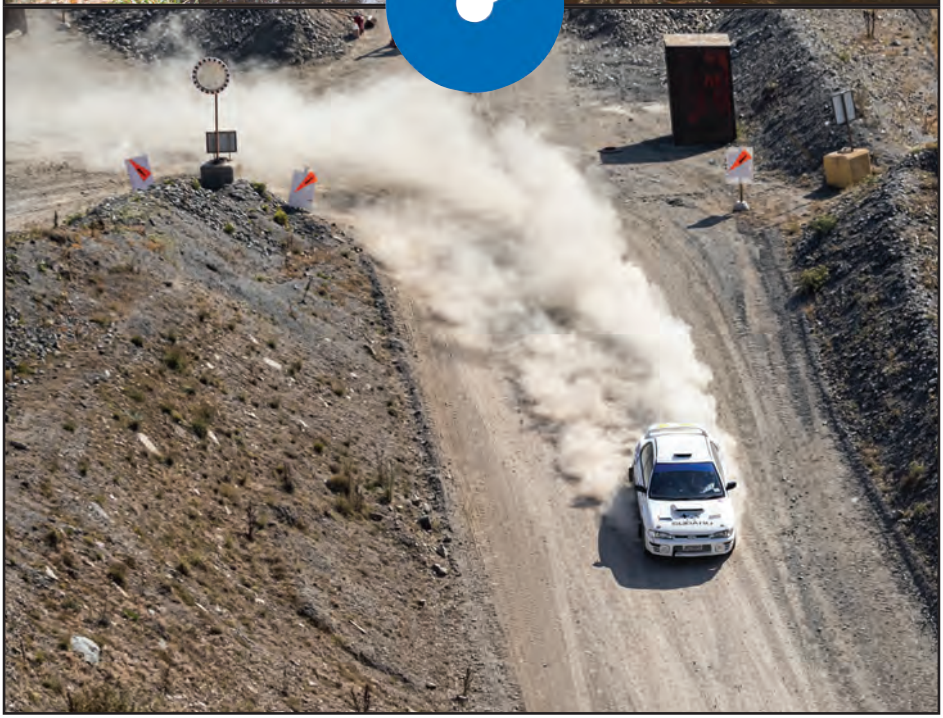

(R) Rallying

Regulations Applying to All Rallies

1.1. Any Competition traversing a highway in England, Wales or Scotland is subject to the provisions of the Motor Vehicles (Competitions and Trials) Regulations. Applications to run such events must be made to the Competition Authorisation Office (CAO) at Motorsport UK House, or in the case of Scotland to the Royal Scottish Automobile Club. Details of the authorisation procedure are available from either organisation.

1.1.1. In addition a Motorsport UK Permit must be obtained for all events before they are run.

1.1.2. The Permit and the CAO Authorisation numbers must be shown in all Final Instructions.

1.1.3. Deleted.

1.1.4. Motorsport UK Permit applications must be made in accordance with D.4.1 prior to the CAO Authorisation being granted.

1.1.5. The Permit itself is validated only when authorisation has been granted.

1.1.6. Clubs must not allow a new Organiser to organise any event without there being strict checks by experienced people concerning compliance with these Regulations.

1.1.7. Organisers of Interclub and higher status events must have sufficient previous organisational experience.

1.1.8. Motorsport UK will appoint a Safety Delegate to all Multi- Venue Stage Rallies and any other Stage Rally, including Rally Time Trials, where Motorsport UK deems it appropriate to do so.

1.1.9. The use of the public forest estates managed by Natural Resources Wales, Forestry and Land Scotland, and Forestry England, must have been approved by Motorsport UK. Permission must be applied for by an annually specified date, prior to the Forestry year (which runs 1 January - 31 December).

1.1.10. No contact should be made with NRW, FLS or FE respectively before receiving approval from Motorsport UK or its appointed Forestry Liaison Officer.

National Courses

1.2. The selection of any route for a Competition is subject to Motorsport UK approval. In requesting approval a detailed itinerary must be submitted giving the exact distances to be covered. Where appropriate, The Motor Vehicles (Competitions and Trials) Regulations must be complied with in all respects.

International Courses

1.3. When the projected route of an event traverses the territory of other ASNs, the Organisers (through Motorsport UK) must obtain the consent of all ASNs through whose territories the route may pass.

1.3.1. The selection of roads to be used, and a detailed itinerary with expected speeds and distances, must be approved by the ASN concerned.

1.3.2. Motorsport UK may impose specific restrictions on the number or character of events that traverse any foreign territory.

Other Events

1.4. Certain events also qualify for a Permit or Exemption Certificate (D.4.5 or D.5.1) provided they meet Motorsport UK Regulations for organising Rallies.

1.4.1. Deleted.

Upgrading of Events

1.5. For a Rally to be considered for upgrading to Interclub status of a similar format, it must be observed as a Clubman event and have a minimum of 25 starters, unless special Motorsport UK dispensation has previously been agreed.

1.5.1. For upgrading to National Stage Rally there must have been a minimum entry of 50 as a Interclub event of a similar format to that proposed, for two consecutive years preceding first time application. Thereafter the minimum entry must not be less than 50 in one of two consecutive years.

1.5.2. Upgrading to an International Stage Rally will be at the discretion of the Motorsport UK.

Duties and Responsibilities of Clerks of the Course

2.1. Along with duties detailed in G.5, the Clerk of the Course should ensure compliance with the following:

2.1.1. The organisation and Regulations for the event must meet the requirements of the relevant Statutory Instruments.

2.1.2. Reasonable precautions must be taken in the selection of route, time of day, control of spectators and any other relevant factors to avoid inconvenience to the general public.

2.1.3. The Organisers must familiarise themselves with the medical and ambulance facilities along the route.

2.1.4. Effective public relations work must be carried out (3.1).

2.1.5. In farming areas, event details must be sent to the appropriate County Secretary of the National Farmers' Union and any similar National bodies.

2.1.6. The appointed CAO Route Liaison Officer (RLO) for each of the Counties and National Parks through which the route passes must be consulted about the draft route at least three months before the event date and before submission to the CAO. This is particularly important when special public relations work in sensitive areas is required.

2.1.7. The Route Liaison Officer must also be consulted as above in respect of Single Venue Stage Rallies, and all other rallies whether using the public highway or not.

2.1.8. The RLO may:

- Request the sight of all paperwork relating to the event, including PR sheets.

Note: Throughout these sections an asterisk(*) indicates a requirement for additional information to be printed in the Supplementary Regulations (SRs). Text shown in Italics indicate a Regulation which may be amended in the SRs. Text shown in red indicates a new or amended regulation for 2022.

- Request the CAO to suspend authorisation, or Motorsport UK to suspend the Permit, until the route or the effectiveness of the PR work in his area has been confirmed.
- Require the Clerk of the Course to order re-routes as appropriate, to avoid areas of special concern.
- Exercise discretionary judgement on where competitive sections may be run and their length, and withhold agreement to the route if not satisfied with any aspect of the organisational standards or route planning.
- Require the Clerk of the Course to order additional technical restrictions on vehicles as appropriate in their area, with the approval of Motorsport UK.

2.1.9. Private property of any description must not be used without written permission from the landowner or authorised agent.

2.1.10. The necessary permission from Highway Authorities must be obtained in respect of all Footpaths, Bridleways and Restricted Byways that are used or crossed, and any conditions laid down must be adhered to. In particular, these locations must be adequately marshalled by Officials who are well briefed and properly identified. One Official must be appointed for each such section to ensure that the event is seen not to inconvenience unduly members of the public. The Official must have a good working knowledge of the Rights of Use applying to the Section. Alternative routes for other Rights of Way users must be signposted. Warning Notices (D.31.1.2, D31.1.4 and D.31.1.5) as appropriate and the Safety Code should also be on display in all such areas.

2.1.11. Ensure that appropriate sanitation is available throughout the route of the event, the locations of which to be communicated within event documents. Particular consideration is to be given to locations prior to the start of Special Stages and at Service Areas and Rest Halts. Local authority guidance is especially relevant in respect of the provision for Spectators. Further guidance is given in the Stage Rally Safety Requirements.

2.2. No person may drive more than 200 miles continuously without relief, and there must be a prescribed rest period of at least one hour for each Driver at intervals of not more than 200 miles.

2.2.1. Any event that runs for more than 14 hours must, unless previously agreed by Motorsport UK, have a rest halt of at least two hours.

2.3. Wherever Competitors are on a public highway they must be controlled by a pre-determined speed schedule, unless they are allowed to complete the event in their own time.

2.3.1. This schedule must not require or encourage drivers to exceed any statutory limits where imposed,
or be considered dangerous or unreasonable in regard to prevailing traffic conditions and the nature of the route.

2.3.2. No time or speed schedule must be imposed which requires or encourages competitors, while using a highway open to the public, to achieve an average speed between any two points that exceeds the following limits (33.1):

(a) 30mph for cars in the case of all highways other than motorways. For sections run on minor roads under 4m wide during daylight hours (07.00 to 22.00 hrs) the average speed may not be greater than 20mph unless agreed by the RLO.

(b) 60mph for cars in the case of motorways.

(c) 25mph in the case of any vehicle subject to a speed limit (such as vans).

(d) 20mph for cars on neutral sections (except on M, A or B class roads).

(e) In addition there must be no bonus for exceeding the specified average. Competitors must be given in advance all the information necessary to enable them to calculate the speed that they are being asked to average (11.2.1).

2.3.3. *The Organisers may establish a check at any point for the purpose of observing maintenance of a set speed and/or time schedule and/or route, provided that competitors are advised of these checks in the SRs and are given all the necessary information to enable compliance.

2.3.4. Where Competitors are going onto a highway from private ground, every practicable precaution should be taken to avoid depositing mud or soil on the highway.

2.3.5. The use of gated roads should be avoided if practicable, but if competitors are to traverse a gated road, adequate arrangements must be made to ensure that all gateways are manned by Marshals who will ensure that no competitor is required to open a gate, and that all gates are closed after the Competition.

2.3.6. Occupiers of land adjacent to the road must be advised before the Competition.

2.3.7. Except when used as special stages, the use of single track roads should be avoided if practicable during daylight, but if competitors are to traverse such roads the speed set must be lowered as appropriate.

2.3.8. Those sections of an event involving difficult navigation by means of map references or a detailed route card must be scheduled so that no competitor is traversing minor roads during the busy morning or evening hours, unless the required average speed is not more than 20mph.

2.4. Controls must be sited at places where there is adequate room for Officials' and Competitors' cars to stop without affecting non-rally traffic.

2.4.1. Controls must be sited at least 500m from occupied houses, except where written approval has been obtained from the occupants.

2.4.2. All controls must be clearly identified at the roadside (9.2).

2.4.3. Controls at which Competitors are required to stop for the purposes of recording a time, and which are on the public highway, must not be less than two miles from any similar control.

2.5. Competitors must be provided with all necessary regulatory information at or before their starting time.

2.5.1. Competitors must be started on the road sections of a Rally at intervals of one minute and will leave the start in numerical order, unless the SRs specify a longer time interval or a different order.

2.5.2. On Road Rallies, reverse seeding is not Permitted.

2.6. After a rally has started, the Organisers will not accept any claim from Competitors concerning either Force Majeure or baulking (24.6). Nevertheless the Clerk of the Course may disqualify any Competitor proven to have unreasonably baulked another.

2.6.1. Wherever possible the event route should be checked for damage immediately before and after the event.

2.6.2. The Safety Delegate, Stewards and Observers (as appropriate to the event) must be supplied with a complete marked map of the route before the date of the event, and must also be supplied with a set of all instructions and route cards, etc that are issued to Competitors and Officials as soon as they are available.

2.6.3. Competition Licences should be signed proving that the holders completed the event without adverse report. Signatures may be obtained by both the Driver and the Navigator or Co-Driver.

2.7. The Chief Timekeeper appointed for the event is responsible for issuing timing equipment and ensuring that the Marshals are competent to use it.

2.7.1. The Chief Timekeeper must be able to deal with operational problems affecting timing equipment.

2.7.2. Any section of an event that is timed to less than one minute must be timed by certified equipment, digital clocks to Motorsport UK specification R(O/I),R or E/B, recording clocks printing to seconds, or automatic apparatus.

2.7.3. All Official clocks or watches must be set to GMT/BST time.

2.7.4. Any Official timepiece timing to the minute that is not within 15 seconds of GMT/BST time, or any Official timepiece timing to the second that is not within five seconds of GMT/BST time, will be disregarded.

2.8. If competing cars or service vehicles are required to carry any identification markings, the name of the organising Clubs must be incorporated, except in Single Venue Stage Rallies confined wholly to private property.

2.8.1. All Official bulletins, Permits and authorisations, times and results (unless issued in accordance with D.26.1.2) must be published on an Official Notice Board whose location has been notified to competitors (G.3.2, G.11.2.2, 6, 3).

2.8.2. At events where there are Classes for designated groups or categories of car, suitable arrangements to undertake eligibility checks should be available before the Competition or at its conclusion.

Any event with a class or classes exclusively for historic vehicles as defined by 49 (Historic Special Stage Rallies) must appoint a Historic Grade Eligibility Scrutineer. Events with a class or classes exclusively for historic vehicles as defined by 19 (Historic Road Rally Cars) may be required to appoint a Historic Grade Eligibility Scrutineer at the discretion of Motorsport UK.

2.9. All the vehicles, including Course/Safety Cars, must comply with the relevant Technical and Safety Regulations.

2.9.1. Checks may be carried out both before and during an event.

2.9.2. The Chief Scrutineer must be available throughout the event to ensure that the Technical Regulations are complied with.

2.10. When the Motorsport UK Safety and Medical Radio frequencies (81.575 and 81.5375MHz FM) are to be used, they must be operated in accordance with Ofcom and Motorsport UK licensing requirements (24.3.3). Operational Guidelines for the use of the Motorsport UK Safety and Medical Radio frequencies are issued to all Radio Licence Holders, and the Radio Marshals Handbook is published on the Motorsport UK website.

Public Relations

3.1. Public Relations work must be undertaken by Organisers on all events using the Public Highway in accordance with the current legislation and as follows:

3.1.1. Consult with the Route Liaison Officers before starting PR work. If the RLO requires additional PR work in sensitive areas, this must be undertaken.

3.1.2. Be diplomatic, positive and clear about the legal aspects of route authorisation. If the event is run in England or Wales do not intimate that it is authorised by the Police.

3.1.3. Avoid asking for 'authorisation' or 'permission' from house-holders – it invites unnecessary difficulties.

3.1.4. All PR must be by responsible members of the Organising Club or of a Local Club.

3.1.5. The work should be completed to allow enough time to undertake a re-route should this prove necessary.

3.1.6. All PR letters must be checked by the RLO and must indicate who is the Organiser (with a contact address, including email, and phone number), the date of the event, in which direction it is travelling, and the approximate time of passing.

3.1.7. Special consideration should be given to householders with pets or livestock.

3.1.8. Where an Organiser is intending to publish a guide to the route or specific locations for spectators to see the event, ensure that:

(a) Householders within 500m of any specifically advised location have been effectively PR'd without difficulty and these areas are marshalled.

(b) The information issued contains warnings of locations that spectators must avoid (blackspots, sensitive areas, etc).

(c) Ensure that each PR crew prepares reports on each visit and these are available to the Clerk of the Course and the Stewards on the day of the event, and to the RLO on request. Special note must be made about problem areas for the benefit of future events, and these reports must be passed on to RLOs.

(d) Contact should be made with local Police before and immediately after all events.

3.2. Rallies with Special Stages, including Single Venue Stage Rallies must comply with Charts, Appendix 1, 3(a) and 3(b).

Sound Testing

4.1. Before the start of a Competition all Competitors' cars and those Officials' cars that are expected to follow a substantial part of the route must pass a sound test.

4.1.1. This test must be conducted by an Environmental Scrutineer using a sound meter as prescribed in the Technical Regulations (J.5.17, G.10.1 to G.11.2).

4.1.2. Any car reading over 98dB(A) in this test will be prohibited from starting, (except in Special Stage Rallies where a level of 100dB(A) is Permitted) unless the SRs specify lower levels.

4.1.3. All measurements refer to the 0.5m test (J.5.16). Wherever practical the 2.0m test should be used for road rallies.

4.1.4. For cars of Periods A to D there is a waiver from the requirement to use a sound meter on daytime events, but Driving Standards Observers for sound must be appointed.

4.1.5. The Organisers must make arrangements for a suitable testing site to be available and ensure that adequate personnel are appointed.

4.1.6. A further sound test of the same vehicles must be made on any road sections, and these should be manned by a Driving Standards Observer and/or Judge (8.1, 8.3, 24.7, 24.8, G.7.8, G.11.2) qualified to carry out their duties by experience.

4.1.7. The DSO have the authority to stop any car until it complies with relevant sound regulations (G.11.1).

Competitors' Regulations

5.1. Competing cars must comply with the appropriate Technical Regulations (18-20, 46-49, and Section J).Commercial vehicles are not permitted in rallies except in accordance with J.5.20.6 and where the time schedule is set to a lower average speed compliant with MV(C&T)R. (2.3.2(c)).

5.1.1. *Competitors and vehicles must report for the start and for scrutineering at the times stated in the SRs or risk being disqualified or forfeiting their starting position.

5.1.2. At the time of scrutineering, Entrants, Drivers and Co-Driver or Navigators must produce for approval their Competition Licence and/or Club Membership Card, the name and address of their insurers covering any part of the event on the Public Highway (D.12.3.6) and an Entrant's licence.

5.1.3. Competitors on Historic Road Rallies must also present the DVLA registration document of their vehicle as proof of its period authenticity. If the registration document is not sufficient verification, written authorisation from Motorsport UK (or an MSA/ Motorsport UK/FIA identity form) must be presented.

5.1.4. Any Competition Licence holder who Permits the unauthorised presence at any time of any vehicle on a known or former Special Stage or on private property including land owned or managed by the Defence Infrastructure Organisation, Natural Resources Wales, Forestry and Land Scotland, the Forestry England or DAERA Forest Service NI will be disqualified from any related event and referred to the MSC National Court.

Necessary Licences

5.2. A Competitor must hold a current valid RTA licence appropriate to their vehicle in an event.

5.2.1. Both Driver and Co-Driver or Navigator must hold and produce a valid Competition Licence for those rallies specified in the 2022 Chart of Minimum Acceptable Licences as requiring a Competition Licence. Exceptionally and for Clubmans Historic Road Rallies only, competitors who are not eligible to apply for a UK Competition Licence may obtain an Historic Regularity Competitors Permit which use and validity is limited solely to that rally.

5.2.2. Competitors must hold and produce a valid Club Membership Card for all events of Interclub status or less.

5.2.3. If the Entrant is neither the Driver, Co-Driver or Navigator, they must hold and produce a valid Entrant's Licence (2022 Chart of Minimum Acceptable Entrant's Licences).

5.2.4. To upgrade a Competition Licence, refer to H.15.2 or the notes accompanying the Licence application form.

Minimum Ages

5.3. Drivers must be at least 17 years old and hold a full RTA Licence for all Rallies.

5.3.1. Navigators (non-Drivers) on Rallies without Special Stages must be at least 12 years old, and 16 years old on rallies with Special Stages.

5.3.2. No person under 16 years of age may be carried during a Rally with Special Stages.

5.3.3. Exceptionally for Single Venue Stage Rallies taking place on a venue that is currently, or was previously, a licensed Race, Speed or Kart circuit, or any airfield type venue (disused or not), the minimum age for the Navigator is 14 years of age.

The Crew

5.4. Those people occupying any car will be collectively referred to as its crew.

5.4.1. Each car must carry at least one Passenger (as Navigator or Co-Driver) as well as the Driver.

5.4.2. Except in accordance with official approval or instructions, the persons carried at the start must not be varied during the event.

5.4.3. Only the nominated Driver and Co-Driver listed on the Official entry form can drive during a Competition, unless the SRs specify otherwise.

5.4.4. No-one is allowed to travel other than in a proper seat.

5.4.5. No competing vehicle can carry more than one physically disabled person, whose participation must be authorised by H.12.

Numbers (J.4)

6.1. Any means of identification fixed for the Competition must be removed when a Competitor retires, is disqualified from, or completes the event.

6.1.1. On Road rallies, rally plates (if required by the Organisers) must be displayed at the front or rear of the car and on, or just below, the rear nearside window.

6.1.2. For Endurance Road Rallies rally plates must be displayed at the front or rear of the car and 2 x numbers for each rear side window which shall be 15cm high with a stroke width of at least 15mm, coloured orange or yellow and may be reflective. These numbers shall be in place at the top of the rear side windows.

6.1.3. On Special Stage Rallies the organisers will specify in the SRs how competitors must display their allocated competition number as follows:

(a) In accordance with J.4 or,

(b) Front door panels must measure 67cm long by 17cm high including a 1cm white surround. This panel shall comprise of a 15cm x 15cm competition number box which shall always be at the front of the panel. When the number is greater than 99, the box width may be increased.

Numerals may be reflective yellow (PMS 803) of height 14cm and stroke width 2cm on a matt black background. In addition to the above 2 x numbers for each rear side window which shall be 20cm high with a stroke width of at least 25mm, a minimum separation not less than 25mm and coloured yellow or orange and which may be reflective. These numbers shall be in place at the top of the rear side windows.

6.1.4. The numbers must be in position before the car is presented for scrutineering and will be subject to approval as to the position, legibility and size.

6.1.5. The timekeepers may decline to record the time of any car whose competition numbers are not readily apparent.

6.1.6. On Multi-Venue Stage Rallies rally plates must be displayed at the front and rear of the car. On Single Venue Stage Rallies front and rear plates are at the organiser's discretion.

Instructions to Competitors

6.2. Along with D.4.3 the SRs for the event must clearly state:

6.2.1. The type of Rally (Road, Navigational, Stage, etc) that is being organised, and if there will be Standard Sections, Special Stages, Regularity sections or other types of test.

6.2.2. When details of the route or any test or stage will be issued.

6.2.3. Any maps required (including their scale and issue reference) and any modification of 25.9.

6.2.4. In any dispute concerning mileages, these shall be calculated according to 1:50,000 OS maps (or equivalent local maps).

6.2.5. The type of timing to be used.

6.2.6. A reminder of which sub-sections of the Technical Regulations apply.

6.2.7. Whether or not cars are required to be taxed and insured for use on the public highway (46.1.1).

6.2.8. Whether servicing is Permitted, and if so the manner in which service vehicles will be identified.

6.2.9. Any information which is required in order to comply with 2.3.3.

6.3. No oral instruction to Competitors during an event will be valid if this affects the route, the time schedule or the layout or performance of a stage or test.

6.3.1. Any instruction concerning these aspects must be displayed as an Official notice at least 30 minutes before the first car is due to start, or issued in writing to each Competitor who must acknowledge receipt in writing (D.8.1.4, G.11.1).

Specific Regulations for Road Events

Road events will be organised in accordance with 1 to 6 where appropriate, and the following regulations;

7.1. The following definitions apply:

Road Rally

7.1.1. A Rally in which Competition on the Public Highway does not qualify for an alternative category and in which marking for maintaining a time schedule forms a substantial part of the Competition.

Historic Road Rally (16.4)

7.1.2. As above, but participation is limited to cars complying with the appropriate Technical Regulations for Historic Category 1, 2, 3 and 4 Road Rally Vehicles.

Navigational Rally (16.1)

7.1.3. A rally designed to test the navigational skill of the crew.

Veteran Rally (or Run)

7.1.4. A Rally or Run restricted to vehicles built before 1st January 1919.

THE ROAD TRAFFIC ACT 1988/91

From 1 July 1992, the offences of dangerous, careless and inconsiderate driving of a mechanically propelled vehicle on a road (sections 1, 2 and 3 of the Act as amended by the Road Traffic Act 1991) also apply to a public place. The extension of road traffic law to public places has important consequences for those who take part or organise events involving motor vehicles in fields, parks or other areas where the general public is admitted either free of charge or on payment of an entrance fee.

The above offences do not apply to those taking part in 'authorised' motoring events when driving in a public place other than a road, provided they are driving in accordance with the appropriate authorisation for that event. Section 13A allows for the 'disapplication of sections 1 to 3 for authorised motoring events' and provides powers for The Motor Vehicles (Off-Road Events) Regulations 1995 which introduces a system for authorising events.

The Royal Automobile Club Motor Sports Association Ltd is an 'Authorising Body' under these Regulations.

It is not illegal to organise or take part in an unauthorised motoring event in a public place, but drivers and riders should be aware that they are liable to prosecution if they drive dangerously or carelessly.

There are many kinds of motoring events. Different rules are appropriate to minimise risk to participants, spectators and other members of the public who may be present.

A precise definition of 'event' or 'public place' cannot be given. If there is any doubt organisers are advised to seek legal advice. Authorising bodies should consider whether the event requires drivers to drive dangerously. It is not the purpose of the Regulations to legitimise unnecessary dangerous driving, nor is it desirable to authorise an activity which is likely to be regarded as an event as this could give drivers a false sense of security.

It is not foreseen that courts would regard purpose built stadiums, where the public have no access to the place where the event is staged, as a public place.

Copies of the Road Traffic Act 1988 and 1991 and The Motor Vehicles (Off-Road Events) Regulations 1995 are available online at www.legislation.gov.uk

Vintage Rally (or Run) (16.2)

7.1.5. A Rally complying with one of the above categories and restricted to vehicles built in Periods A to D (Non Rally). The category must be indicated in the title of the event (i.e. Vintage Twelve Car).

Economy Rally (16.2)

7.1.6. Designed to assess the fuel economy of Competitors' cars and in which the overall results are based on the relative fuel consumption of the vehicles.

Twelve Car Rally (16.3)

7.1.7. A Rally that complies with one of the above categories and which falls within the provisions of automatic authorisation under the Motor Vehicles (Competitions and Trials) Regulations (where applicable). The category must be indicated in the title of the event (ie Economy Twelve Car Rally, etc).

Navigational Scatter Event

7.1.8. A navigational event where there is no Competition on the public highway and which falls within the provisions of automatic authorisation under the Motor Vehicles (Competition and Trials) Regulations (where applicable).

Targa Road Rallies

7.1.9. Targa Road Rally. A schedule timed rally where the principal competition comprises the competitor's performance on Special Tests.

Endurance Road Rally

7.1.10. A Road Rally where a substantial proportion of the Competition takes place on the highway, timed to the minute, and which shall also include Special Tests on private property which may be timed to the second.

All Events

7.2. Classic Trials, Road Safety Events, and any other form of event that uses the Public Highway must comply with the following:

7.2.1. They must not include any Special Stages.

7.2.2. Except for Road, Targa and Navigation Rallies, they must not include any Special Tests.

7.2.3. Competitors must not carry any form of Intercom (ie any method of voice amplification) or any radio transmitting device. Exceptionally, mobile telephones are Permitted if the SRs specifically allow them. Failure to conform will be penalised as 13(p).

7.2.4. No regular assistance organised in advance may be used by Competitors in Rallies defined in 7.1 inclusive, except when Permitted in the SRs for Vintage or Veteran events.

7.2.5. No assistance may be expected from the Organisers.

7.2.6. Competitors are responsible for ensuring that they are supplied with fuel, oil, water, etc, even though the Organisers may advise on where these supplies may be obtained.

7.2.7. A car may not be moved other than by its own power except:

(a) By a ferry.

(b) By outside means for a minimum distance necessary to extricate it from difficulty.

(c) By gravity.

(d) By its crew.

7.2.8. Competitors are strongly recommended to carry a First Aid Kit, high visibility vests or jackets and, where appropriate, a torch.

7.2.9. The use of in car cameras is forbidden. Organisers may not sanction, encourage or facilitate the filming of events taking part on the public highway.

Duties and Responsibilities of the Clerk of the Course (D.25.1, H.31.1.1)

8.1. Judges may be appointed to adjudicate on:

8.1.1. Failure to stop at Stop or Give Way signs.

8.1.2. Failure to comply with the requirements of a test.

8.1.3. False starts on tests or standard sections.

8.1.4. Unauthorised use of auxiliary lights.

8.1.5. Unauthorised possession of recorded notes, radio equipment or intercom (7.2.3).

8.1.6. Unauthorised servicing.

8.1.7. Excessive sound.

8.1.8. Violation of out of bounds areas.

8.2. Regional Associations must be advised by event Organisers at least two months before all Road Rallies, including Navigation and Historic Road Rallies, take place within their area.

8.2.1. Regional Associations may appoint a Driving Standards Observer (G.11.1 to G.11.2).

8.2.2. All other events may appoint their own Driving Standards Observers (G.11.1 to G.11.2).

8.3. Driving Standards Observers will adjudicate on:

8.3.1. Excessive vehicle sound including exhaust, induction and transmission sources (observed during the event).

8.3.2. Excessive speed.

8.3.3. Driving in a manner likely to bring motor sport into disrepute.

8.3.4. Compliance with special restrictions, eg Quiet Zones.

8.4. Any Competitor driving at an excessive speed, recklessly or in a manner likely to bring motor sport into disrepute, or convicted of any driving offence committed during an event, may be disqualified.

8.5. Checks operated by Judges or DSOs need not be manned for the whole period during which Competitors may report and may operate on a random basis.

8.5.1. The Official in charge of any control or check may mark or withhold a Competitor's Route Card or Time Card if a vehicle has suffered damage to its exhaust system.

8.5.2. All Timekeepers will be Judges concerning time recorded.

8.5.3. For Road Rally Events (as defined by Permit), and all events including Special Tests, the Chief Scrutineer must be appointed from the list of Motorsport UK Technical Officials (NAT).

Route

9.1. The only route information that may be given out before the Competitors' due start time will be information regarding Quiet Zones, Black Spots, Rejoin Points and Neutral Sections. Exceptionally, for Road, or Historic Road Rallies, and only if the SRs Permit, other route information may be given in advance for those parts of the route that take place between the hours of 07.00 and 22.00.

9.1.1. The location of all Stop and Give Way junctions along the route must be issued to Competitors along with clear instructions as how they must treat them (9.1.3).

9.1.2. Organisers must identify any other junction at which Competitors are required to stop.

9.1.3. Competitors must Stop before entering any road protected by a Stop sign or a Give Way sign where that part of the event is held between 22.00 and 07.00 hrs. Failure to comply will be penalised as in 13(q), 9.1.1.

9.1.4. Exceptionally, with the specific permission of the RLO, Give Way signs in Quiet Zones may be negotiated according to the Highway Code. Any such junctions must be advised to Competitors in advance.

9.1.5. Only 1:50,000 scale OS maps may be used.

9.1.6. The only information that can be added to the OS map as sold is:

(a) Highlighting numbers, words and legends printed on the map within the confines of the outer printed grid numbers.

(b) Highlighting and repeating grid lines and numbers, and marking adjacent map numbers outside the of the outer printed grid numbers.

(c) Information provided by the Organisers of the event.

9.2. The onus of following the correct route rests with the Competitor who must visit controls and checks in the order set out in the Time Card or Route Card, unless otherwise specified.

9.2.1. Any control is considered to extend for 50m around the actual point at which Officials are making their records, unless clearly visible signs are displayed to define a different area.

9.2.2. The direction of approach to a control or check will be specified by the route information. Approaching a manned control from any other direction, or visiting a control or check more than once, will involve a penalty.

9.2.3. No private road must be used by Competitors unless specific permission to do so has been given by the Organisers.

9.3.1. Quiet Zones. Any Quiet Zone in a Standard or Regularity Section must be monitored by a Driving Standards Observer.

9.3.2. The end of a Quiet Zone should be indicated by an end of QZ Board.

Types of Section

10.1. The following terminology and restrictions apply to all Rally sections.

10.1.1. No other title or description will be valid.

10.1.2. No section will have a Flying Finish time control.

10.1.3. No section will have any award for Competitors who equal or improve upon the section time schedules or record the fastest times or least penalties on any sections.

10.1.4. At the start of any Section or Special Test held in whole or in part on private property the organisers must provide a Medium Spill Kit.

Standard Sections

10.2. A Standard Section may not use the same stretch of road more than once, nor include any intermediate Time Controls. Where a Standard Section is timed to the second it must not:

(i) Pass through any area that has more than 20 occupied dwellings within 300m radius of the route, unless written agreement is given by all the householders within that area and Motorsport UK has given its permission.

(ii) Join or cross any A-class road (except where there is a manned control at which competitors must stop at the junction) or start on or use an A-class road for more than 200m continuously.

(iii) Start the first car before 23.59hrs, and the last car, including any lateness, must finish 1/2 hour before sunrise.

(iv) Include any area or point where competitors are required to observe special restrictions as to their driving behaviour, except for observing signs warning of natural hazards. Quiet Zones or other restrictions are specifically forbidden.

10.2.1. Organisers may erect signs warning of natural hazards.

10.2.2. Standard Sections must not include any road with a 30 or 40mph limit without the express permission of the RLO.

10.2.3. Standard Sections must not require competitors to average more than 30mph.

10.2.4. If timed to less than a minute, Standard Sections must not use any include more than 250m of private property, other than Footpaths and Bridleways and Restricted Byways, for which approval has been granted by the landowner and the Highway Authority where appropriate.

Neutral Sections

10.3. A Neutral Section must be used to take competitors through a PR-sensitive or densely populated area.

10.3.1. It must be completed by Competitors without the use of auxiliary lighting, except as permitted by law in conditions of poor visibility. Organisers must remind Competitors of this requirement in their SRs.

10.3.2. Neutral Sections must not:

(a) Be timed to less than one minute.

(b) Permit Competitors to make up time on the public road.

(c) Have any lateness penalty applied, except for Maximum Lateness.

(d) Have an average speed of more than 20mph, except on M, A or B-class roads.

Regularity Sections

10.4. *The locations of the Start and Finish of Regularity Sections must be given to Competitors in advance.

10.4.1. Each Regularity Section must contain at least one Intermediate Time Control, the location of which must not be given to Competitors in advance.

10.4.2. Competitors must be advised in writing before entering such a section whether they are required to stop at Intermediate Time Controls, which should be identified by a control board.

10.4.3. Adherence to the time schedule in a Regularity Section will be assessed by comparing the time of arrival at any Intermediate Time Control or the Finish Time Control with the time of arrival at the immediate preceding Time Control. Timing, whether or not the car is required to stop, will be at the moment of the car entering the Time Control area.

10.4.4. Penalties (which must be specified in the SRs) will be imposed for stopping within sight of but outside the control area of any Intermediate Time Control and the Finish Time Control.

10.4.5. Competitors will not be required to maintain an average speed in excess of 30mph.

10.4.6. May only be included in the following rallies as defined by Permit; Historic Road, Endurance Road, Targa Road, Navigation, Veteran, Vintage and Economy.

10.4.7. Consistency Test. May only be run under a Historic Road Rally Permit and at a venue with a current Motorsport UK Track Licence. Written Motorsport UK approval must be obtained for any Consistency Tests by submitting detailed diagrams and written explanations of their format and finishing procedures, before the event.

Transport Sections

10.5. A Transport Section is used to transport Competitors between other types of section where the route is not PR sensitive or densely populated.

10.5.1. These Sections must not be timed to less than one minute nor less than four miles in length and must not have any lateness penalty applied, other than for maximum lateness.

10.5.2. They must comply with 12.7.

10.5.3. If using roads where a 30mph or 40mph limit is in force, a lower average speed must be imposed depending on the proportion of restricted roads in the section.

Special Tests

10.6. Written Motorsport UK approval must be obtained for any Special Tests by submitting detailed diagrams and written explanations of their format and finishing procedures, before the event.

10.6.1. These tests must be designed so that no Competitor can be expected to exceed an average speed of 30mph (40mph for Endurance Road Rallies).

10.6.2. No benefit must accrue to any Competitor who exceeds this speed.

10.6.3. Test finishes must be arranged so that there can be no possibility of a Competitor completing a test whilst a previous Competitor blocks the Finish.

10.6.4. Flying finishes are not Permitted.

10.6.5. Vehicles must comply with 18 or 19 as appropriate or 20 for Endurance Road Rallies.

10.6.6. Passengers may not be carried in the rear seats of open cars.

10.6.7. Rallies with Special Tests may not permit vehicles of commercial type, such as vans/pickups (J5.20.6).

Controls

11.1. Controls, checks and test sites must open at least 15 minutes before the due time of arrival of the first car, and close 30 minutes after the due time of arrival of the last car, unless the SRs specify otherwise.

11.1.1. *The SRs will specify what penalties will be applied for stopping within sight of any control and for early or late arrival at any control on a Regularity Section.

11.1.2. If at any control or check due to be operated by Officials, the Officials are not present during the whole period when the competitors may report, all performances at that point will be ignored in compiling the results (except as provided for in 8.5).

11.1.3. All performances will also be ignored if a control or check is not sited at the location specified in Official documents.

11.1.4. The onus of ensuring that all the information required is clearly and legibly recorded at the appropriate time and place rests with the competitor.

11.1.5. Should any entry on a Time Card not be legible or not appear authentic, it can be considered not to have been made.

11.1.6. Organisers must refer to Marshals' check sheets in case of doubt.

11.2.1. If there is a discrepancy between the time allowance shown by the Organisers on a Time Card and that shown on any other document, the Time Card value will be taken to be correct, unless previously amended in an official bulletin.

11.2.2. It is an offence for any Competitor to continue in an event until the information required by 2.3.2 is provided.

Types of Control or Check

Route Check

11.3. An unmanned check to prove a Competitor's adherence to the correct route.

11.3.1. Proof of passage will entail the Competitor recording the symbols from a Code Board that must be placed facing oncoming Rally Cars.

11.3.2. The Code Board will be not less than 315 sq cm and will show not more than five black numbers or letters (or a combination of both up to a maximum of seven) and be the right way up on a contrasting background.

11.3.3. The size of the letters and numbers will be not less than 7.63cm with a minimum of 1.27cm stroke width.

Passage Control

11.4. A manned control established to prove a competitor's adherence to the correct route.

11.4.1. It cannot be located less than 500m from any other manned control.

11.4.2. The only information permitted to be recorded is the Marshal's signature or stamp and the authentication of the records held by the competitor.

Time Control

11.5. A manned control established to record the time of a competitor who must come to a stop for the purpose.

11.5.1. It can additionally record the direction of approach and departure of the competitor.

11.5.2. The only other information permitted to be recorded by the Marshal is the authentication of the records held by the competitor.

11.5.3. These records, to be valid, must be signed by the Marshal with the Competitor not being required to make any entry on the Time Card.

Main Time Control

11.6. Organisers may designate certain Time Controls (11.5), such as Start Controls and Restart Controls, as Main Time Controls (MTCs).

PUBLIC HIGHWAY EVENTS

All motoring competitions held on the public highway, including motorcycle events, are governed by the Motor Vehicles (Competitions and Trials) Regulations 1969 (as amended). Under this legislation The Royal Automobile Club Motor Sports Association is the authorising body for England and Wales.

Scotland is handled in a similar fashion, albeit with a different system of processing, by RSAC Motorsport Ltd.

Although certain events are automatically authorised under the legislation, in particular events involving no more than twelve competing vehicles, or those with no set route or timing on the public highway, all organisers should ensure that they are acquainted with the terms of the legislation prior to running any event for cars or motorcycles on the public highway. The official title of the document for England and Wales is Statutory Instruments 1969 No. 414 Road Traffic as amended and are available online at www.legislation.gov.uk.

The organiser of any event which requires Authorisation under the legislation must make an application to the relevant office between two and six months before the planned date of the event, on an official application form (Form E404) which must be accompanied by duplicate tracings, or emailed in a digital format, taken from the current 1:50,000 scale O.S. maps in the case of England and Wales, showing the public highway route and detailing the control points and time schedule planned for the event. The minimum period of two months has to be rigorously enforced .

On receipt, applications are checked for compliance with the legislation and also with a rationing system which is designed to limit the number of events using a particular section of road in a given period. A certain level of public relations work is required as a condition of the Authorisation being issued, this being designed to limit the impact of events on local residents.

The authorising body sends the details of acceptable events to the Police Forces and National Parks involved with the route and will require action to be taken by organisers in response to any observations they may make about the event.

Organisers are also required to contact local representatives, the Route Liaison Officers, and gain their approval for the planned event. Before the granting of the actual Authorisation (Form E406) a fee will be required, as the departments are designed to be self-financing rather than a drain on central Government finances. Events are Authorised for a fixed maximum number of starters, using a quoted mileage of previously advised route on the public highway.

When the Royal Automobile Club was originally appointed as the sole authorising body for the system of statutory control, it was understood that they would be acting for this purpose independently to their other interests and would necessarily be required to deal on a non-discriminatory basis with applications, whether from recognised clubs, clubs not recognised or individuals. Any additional controls which for their own purposes they might wish to exercise in regard to their clubs would evidently have to be kept separate from the statutory control system itself

The General Regulations of Motorsport UK are not taken into account by the CAO, therefore the fact that Authorisation has been issued for an event does not necessarily mean that the event complies with Motorsport UK General Regulations.

For application forms, details of fees and any further information:

England and Wales
Competition Authorisation Office
Motorsport UK
Bicester, OX27 8FY
Tel: 01753 765075
Fax: 01753 682938
www.motorsportuk.org

Scotland
RSAC Motorsport Ltd
PO Box 3333
Glasgow G20 2AX
Tel: 0141 946 5045
Fax: 0141 946 5045
www.rsacmotorsport.com

11.6.1. Competitors failing to visit or reporting outside their maximum lateness at MTCs will be considered to have retired.

11.6.2. Early or late arrival or departure will be penalised in accordance with 13(e) or (f).

11.6.3. An example of all Official boards must be on display at documentation for the event.

Timing

12.1. All sections must be timed according to the requirements of Scheduled Time by watches that read to correct GMT/BST time of day.

12.1.1. Deleted.

Definitions for Scheduled Timing

12.2. *Standard Time* is the time of day a notional Competitor number zero would be due at any control or check.

12.2.1. *Scheduled Time* is the actual time of day each Competitor is required to be at any specific point.

12.2.2. Scheduled Time can be calculated for any point by taking a Competitor's Competition number, multiplying by the time interval between Competitors at the start, and adding the result to the standard time at that point.

12.2.3. *Delay Allowance* is an allowance free of penalty granted to specific Competitors following a delay under the instructions of an authorised Official of the event. Any Delay Allowance must be recorded in writing on the Competitor's time card by that Official.

12.2.4. *Due Time* is the time a Competitor is due at any control or check inclusive of any previous lateness.

12.2.5. *Penalised Time* is the difference between Due Time and an earlier or later arrival time.

12.2.6. *Penalty Free Lateness* allows a Competitor late at one control to be an equivalent amount late at a succeeding control without incurring further penalty.

12.2.7. *Outside Total Lateness (OTL)* is the point where a Competitor is considered not to have visited a control or check being more than 30 minutes past the Scheduled Time (including any delay allowance), unless the SRs specify a different period.

12.3. The time of arrival at or departure from a control other than intermediate and final controls of Regularity Sections (where 10.4 apply), will be the time at which the Time Card is presented by the Competitor concerned, providing all crew members and cars are within the control area.

12.4. Exceptions to 12.3 are:

12.4.1. In the event of a competing car obstructing other Competitors through being halted or unduly slowed down near a control, the Officials may instruct the Driver to proceed and may then record the time as the time when this instruction is given.

12.4.2. In the event of a Competitor presenting a Time Card to Officials at a time when the car is outside the control area, the Officials have discretion as to whether or not to make a record on the Time Card.

12.4.3. The onus of presenting the Time Card rests with the Competitor.

12.5. The time of reporting at controls will be recorded to the preceding whole minute when penalties are imposed per minute (for example nine minutes 59 seconds will be recorded as nine minutes.)

12.5.1. When a penalty is imposed for timekeeping error of less than one minute, the time will be recorded to the preceding second.

12.5.2. Where a control at the end of a section timed to the second also forms the start of a section timed to the minute, the time of departure will be considered as being the same as arrival, but ignoring any seconds.

12.6. The Organisers can require any Competitor who is late to reduce their lateness by either foregoing or reducing any period of time provided for remaining at a control or official halt.

12.6.1. Competitors may themselves reduce lateness without penalty in the following ways, providing the Section is not defined as Neutral (10.3) and unless either forbidden to do so by the SRs or if by so doing they commit a breach of 12.7.

(a) By reporting at any control following one at which a penalty was applied for lateness at any time not earlier than Scheduled Time.

(b) By missing a Control or Controls. The Competitor will be penalised in accordance with 13(a) or 13(b) for every control missed. On rejoining the route at a control at the end of Standard Section, the Competitor will be permitted to restart without further penalty at any time between their original Scheduled Time and their Maximum Permitted Lateness in relation to their original Scheduled Time. If the rejoining control is at the end of a Neutral Section, and the Competitor has missed the control at the beginning of a Neutral Section, they will only be Permitted to restart without further penalty at their Official corrected time based on the time of arrival at the last control visited within maximum lateness.

(c) If the need arises for an Organiser to extend Maximum Permitted Lateness, this can only be done at a point on the route at which Competitors are required to report to avoid disqualification. Maximum Permitted Lateness can then only be extended for the following part of the route and cannot be applied retrospectively for earlier sections.

These provisions are subject to standard condition 4 of the Motor Vehicles (Competitions and Trials) Regulations where applicable.

12.6.2. No Penalty Free Lateness or official delay allowance that has been either reduced or foregone as Permitted by 12.6 can be reclaimed. However, this does not exclude fresh claims based on new circumstances.

12.7. A Competitor found to have traversed a distance greater than four miles between two consecutive time controls in less than three-quarters of the time specified by the Official time schedule will be penalised in accordance with 13(l). In calculating the penalty, any fraction of minute will be ignored. The ¼ rule does not apply to sections of less than 8 minutes scheduled duration.

This does not preclude the organisers providing specific sections for time recovery.

For example:

12.7.1. In a nine minute section, a penalty is imposed if a Competitor completes a section in less than six minutes.

12.7.2. In a 10 minute section – seven minutes.

12.7.3. In an 11 minute section – eight minutes.

12.7.4. In a 12 minute section – nine minutes.

12.8. Times will be recorded to whole minutes unless the SRs state otherwise.

12.8.1. Any portions of the event to be timed to seconds will be clearly indicated in the Route or Time Cards.

12.8.2. Any timing to less than one minute will be recorded on equipment as detailed in 2.7.

12.8.3. Competitors will be timed by the Official timepieces in the charge of Officials, unless the SRs state that watches carried by the Competitors can be used.

12.9. *If Competitor's own watches are used, they must be of a size and type to enable the dial to be read clearly and must be sealed.

12.9.1. The requirements for sealing watches must be stated in the SRs.

12.9.2. The Organisers may reject any watch that cannot be satisfactorily sealed or read.

12.9.3. If any sealed watch varies from official time by more than one minute, the competitor concerned will be timed by Official clocks from then on, unless the SRs make provision for the replacement or re-setting of the watch concerned.

Penalties

13. See Appendix 1, Chart 13.

Documentation

14.1. All documentation issued by the Organisers have the same force as the SRs. Along with the requirements of D.8.1, the Route Card or Time Card must specify the following:

14.1.1. A description of each section (Standard, Neutral, Transport, Regularity, etc) (10).

14.1.2. The time allowed to traverse the route between each time control, and all the information necessary to enable Competitors to comply with 2.3.2.

14.1.3. What information the Organisers require to be recorded and the places at which these records will be made (11), except as provided for in 2.3.3.

14.1.4. Which checks will be manned by Officials, except checks established in accordance with 2.3.3.

14.1.5. Which portions of the route will be timed to less than one minute.

14.1.6. Any 'out of bounds' areas to be respected.

14.1.7. The areas where the Organisers require Competitors to observe special driving restrictions (ie Quiet Zones, etc).

14.1.8. The order in which controls and checks must be visited.

Results

15.1. To be classified as a finisher, a Competitor must report to all Main Time Controls and, unless otherwise stated in the SRs, at least two-thirds of the controls listed in the Route Card or Time Card.

15.1.1. They must also report to the final control, if not an MTC, within the maximum lateness specified, with the same crew in the same car in which they started.

15.1.2. Competitors at the conclusion of their competition must sign a declaration to the effect that they have not been involved in any incident that may have caused damage to persons or property, or alternatively give details of any such incident. Non-compliance will be penalised in accordance with 13(q) and must be reported to Motorsport UK for further disciplinary action.

15.1.3. Competitors who retire will be required to submit a form to the Secretary of the Meeting within 72 hours of the event. Failure to return a form may result in a fine of up to £100.

15.1.4. Vehicle damage in relation to 13(q) will be considered as being any tear or indentation exceeding 50mm in depth occurring to the external surfaces of the coachwork or its accessories (excluding windscreens, windows, lamps, and bumpers) above the horizontal plane at the wheel centre.

15.2. Competitors will start with zero fails and/or marks. Classification will be made from competitors who have incurred the least number of fails.

15.2.1. Competitors who have incurred an equal number of fails will be classified by reference to total marks lost.

15.2.2. In the event of a tie, the competitor who has completed the greater portion of the competition from the Start, including tests (if any), without penalty (or if both incurred penalty at the same point, with the lesser penalty) will be judged the winner, unless another method of resolving ties is specified in the SRs.

Additional Regulations for Specified Types of Event

16. Certain types of event are granted certain waivers (16.2.3) from the requirements of 3 as follows:

Navigational Rallies

16.1. These must comply with the following in addition to the above:

16.1.1. Classes must be based on the ability of Competitors: for example, masters, experts, non-experts and novices.

16.1.2. They must not include any vehicle Classes, whether by capacity or by group.

16.1.3. With the exception of Novice Crews (as defined in SRs) only the following information may be issued to a competitor before their due start time;

Rejoin Points, Main Time Controls, Blackspots and the location of the Finish.

16.1.4. Information in a sealed opaque envelope is not considered as issued until the envelope is opened.

16.1.5. With the exception of Novice Crews (as defined in SRs), no more than 15% of the Time Controls may be issued to competitors as Rejoin Points.

16.1.6. Rejoin Points may only be located at the end of Neutral Sections.

16.1.7. Cars must comply with 18.3.3., 18.5 and 18.6.

Economy or Vintage Rallies

16.2. These must comply with the following:

16.2.1. Penalties for both early or late arrival must be imposed at all controls. These penalties must be at least as great for early arrival as late arrival.

16.2.2. Other than for Regularity Sections and Special Tests they must not have any section timed to less than one minute.

16.2.3. Subject to compliance with the above, Economy, Navigational or Vintage Rallies will be required to carry out Public Relations work in accordance with 3.

Twelve Car Rallies

16.3. These must comply with the following:

16.3.1. They must be run according to the requirements of an Economy, Navigational or Vintage Rally, and be described in this way in the Supplementary Regulations.

16.3.2. Any section defined as Standard (10.2) may not be timed to less than one minute.

16.3.3. They must not form part of any championship other than one restricted to bona fide members of the organising Club.

16.3.4. A Route Liaison Officer must be consulted. If the RLO requires additional PR work in sensitive areas this must be completed to their satisfaction.

16.3.5. They must not be scheduled to run between 18.00 hours on a Saturday and 07.00 hours on a Sunday, unless written permission has been given by the RLO and advised to Motorsport UK.

16.3.6. They should normally be run mid-week and in the early evening.

16.3.7. Twelve car rallies that do not meet these requirements are not permitted.

Historic Road Rallies

16.4. These must comply with the following:

16.4.1. Classes must be based on the ability of Competitors (masters, experts, non-experts, and novices).

16.4.2. Additionally it is permitted to sub-divide these Classes by vehicle cubic capacity and/or age.

16.4.4. PR work in accordance with 3.1 must be carried out.

16.4.5. Written Motorsport UK approval must be obtained for any special tests. Detailed diagrams and written explanations of their format and finishing procedures must be submitted. These tests must be designed so that no competitor can be expected to exceed an average speed of 30mph. No benefit should accrue to any competitor who exceeds 30mph. Test finishes must be arranged in such a way that there can be no possibility of a competitor completing a test whilst a previous competitor blocks the Finish area.

***Navigational Scatter Events**

16.5. These must comply with the following:

16.5.1. Deleted.

16.5.2. The SRs should clearly define the nature of the event and specify all navigational equipment required.

16.5.3. An estimate of the mileage likely to be covered should be included in the SRs.

16.5.4. The points to be visited must be placed so that there is no single obvious route.

16.5.5. Competitors should have a completely random choice concerning order of visit and must not be required to visit more than 75% of the points listed.

16.5.6. They must be planned in such a way that the Competitors have ample time to attempt to visit the required number of points.

16.5.7. The majority of the points should not be readily accessible without leaving the car. The car should be an incidental means of transport between the various points.

16.5.8. There should be no element of timing on the Public Highway, although Competitors may be required to finish by a specified time.

16.5.9. PR work must be carried out according to 3.1.

Targa Road Rallies

16.6. Targa Road Rallies must comply with the following;

16.6.1. Not include any Standard Sections.

16.6.2. Regularity Sections may be included.

16.6.3. Classes must be based on the ability of Competitors (masters, experts, non-experts, and novices), and may be sub-divided by vehicle cubic capacity and/or age.

16.6.4. Special Tests must comply with 10.6.

Exemption of Permit Events

Road Safety Events

17.1. These must comply with the following:

17.1.1. They should not have a route which exceeds 150 miles on the Public Highway, except in special circumstances.

17.1.2. The marking system on the road section must only be in respect of observance of the law or the Highway Code.

17.1.3. They should not have any timing on the road sections other than that necessary to determine the duration of the Competition.

17.1.4. If any tests of driving ability are included, they should not exceed 100m in length.

17.1.5. If timed tests are included, the speed of the vehicles must not be the sole determining factor, and at least an equal number of untimed tests must also be included.

17.1.6. All tests, whether timed or untimed, should include an element of manoeuvring skill or judgement on the part of the driver in addition to testing the capabilities of the vehicle.

17.1.7. The title of the event must clearly indicate its connection with road safety.

Treasure Hunts

17.2. These must comply with the following:

17.2.1. No merit must attach to being the first to arrive at the Finish or at any other point.

17.2.2. Competitors must not be required to arrive at any point other than the Finish at or by a specific time.

17.2.3. Where an overall time limit is set for the event, it must be possible to win without exceeding an average speed of 10mph from Start to Finish.

17.2.4. Competitors must not be required to travel more than 100 miles on a highway, or to perform any task or solve any problem that is likely to inconvenience or offend any one not taking part in the event.

Veteran Car Rallies (or Runs)

17.3. These must comply with the following:

17.3.1. If they are run in accordance with 17.3.2 and 17.3.4, it will be exempt from the PR requirements of 4 and Public Relations work need only be undertaken by prominent advertising in the area of the route.

17.3.2. They must allow Competitors to set their own average speeds subject to a maximum average of 24mph between Start and Finish (or Rest Halt).

17.3.3. They must have no intermediate timing points between the Start and Finish (or Rest Halt) and must have only passage controls along their route.

17.3.4. Competitors' route instructions should be given in the form of descriptive notes only.

Economy Runs

17.4. If held on or using private land, Economy Runs must obtain Motorsport UK permission before any public announcement is made.

Technical Regulations

18. The vehicle must be currently registered and taxed as a Private Car and comply with all statutory regulations as to the Construction and Use regulations (especially regarding brakes, lighting, tyres, warning devices, rear view mirrors, silencers, speedometers, wings and windscreens).

In this section the term MODEL refers to all variants of the same family of cars. In addition to complying with Section J all cars competing in Road Rallies must comply with the appropriate part of the following:

Body

18.1. Bodywork must represent the manufacturer's original profile and may include any optional extras available directly from the manufacturer.

18.1.1. Bumpers must be fitted.

18.1.2. Paintwork must be one colour or manufacturer's original colour scheme. No primer is to be visible.

18.1.3. Vehicles must not have wheel arch extensions, unless fitted by the manufacturer as a standard item to the body shape.

18.1.4. All major internal trim as fitted to the body type by its original manufacturer when offering it for sale must be retained. This trim will include headlinings, inside door panels, carpets and rear seats.

18.1.5. Front seats may be improved or replaced.

18.1.6. The trim, including the rear seat may be cut to allow the fitting of a safety cage.

18.1.7. If equipped with a non standard fuel tank it must be separated from the driver/passenger compartment by a protective bulkhead of non-flammable material preventing the passage of fluid or flame.

18.1.8. Full harness seat belts may be fitted.

18.1.9. Guards may be fitted beneath the vehicle to provide protection from damage.

Engines and Transmissions

18.2. Vehicle engines must have:

18.2.1. *A maximum of* four cylinders.

18.2.2. *A maximum of* two carburettor chokes (two single or one double).

18.2.3. *A maximum of* one camshaft per bank of cylinders.

18.2.4. Engines with more than one camshaft per bank of cylinders may be used providing that they were originally fitted with fuel injection and that the fuel injection system complete with plenum chamber and throttle body is retained unmodified.

18.2.5. For diesel and petrol engines under 1500cc actual capacity, forced induction is permitted providing that the complete original induction system is retained unmodified, other than the replacement of the air filter element.

18.3.1. Fuel injection may be fitted where it was standard equipment by the manufacturer for that engine type and where the original plenum chamber and throttle body is retained for that engine type.

18.3.2. A standard Wankel unit will be considered as three cylinders – twin Wankel units are prohibited.

18.3.3. Engines must comply with the silencing levels G.11.1, J.5.17 and 4.1 and have induction air filter elements fitted that ensure the vehicle complies with noise regulations J.5.17.

18.3.4. Only H shift pattern manual transmissions are permitted. The gear lever must remain the only means of changing gear unless an alternative method was originally fitted by the vehicle manufacturer as standard. Automatic transmissions are permitted provided that they are in their original configuration as fitted by the manufacturer to that specific vehicle model.

18.3.5. The number and location of the driven wheels must remain as original to the model of car.

Wheels and Tyres

18.4. Wheels and tyre sizes are free but must fit within the standard unmodified wheel arch.

18.4.1. Vehicles must be fitted with tyres that are always legal for use on the public highway.

18.4.2. Tyres must comply with L3-3.2.1.

18.4.3. Vehicles must have all spare wheels securely fastened in position and must not be fitted with spiked or studded tyres or any non-skid attachments, other than chains if permitted by SRs.

Electrical Systems

18.5. Vehicles must have a maximum of four forward facing beams, as well as side and indicator lights, unless further restrictions are specified in SRs.

18.5.1. Light pods are not permitted.

18.5.2. A headlamp must provide the main beam and dipped beam functions.

18.5.3. An auxiliary lamp provides a beam other than that provided by the headlamp. With the exception of cars built before 31st December 1946 the maximum width of the lamp body of any auxiliary lamp must not exceed 222mm.

18.5.4. A headlamp may consist of a single reflector with a dual filament bulb, or separate reflectors each with single filament bulbs providing the functions of main beam and dipped beam separately. This will be considered as equivalent to a single dual filament headlamp unit. Lamp units comprising two reflectors where one is fitted with a dual filament bulb will be considered as a combined headlamp and auxiliary lamp. In this instance therefore no additional auxiliary lamps may be fitted.

18.5.5. Auxiliary lamps unless fitted as standard equipment using gas discharge or LED technology are not permitted and gas discharge or LED headlamp units may not be retro fitted.

18.5.6. Auxiliary lights must not be used in neutral sections except in poor visibility as permitted by law.

18.5.7. Where more than four beams are fitted as standard, only four may be used and the remainder must be rendered unusable for the duration of the event.

18.5.8. Vehicles must have all lights fitted and used according to motor vehicle lighting regulations.

18.5.9. External navigational or Marshal lights are not permitted.

18.5.10. For events taking place wholly between half an hour before sunrise and half an hour after sunset 18.5, 18.5.7, and 18.5.9. do not apply.

Miscellaneous

18.6. Deleted.

18.6.1. Vehicles may not use racing style numbers, nor have any advertising except for event sponsor decals which must be incorporated within the rally plate.

18.6.2. They should be equipped with an effective method of stopping fuel supply, operable by the Driver when normally seated (the ignition switch would normally cover this requirement) and must use pump fuel as defined in Nomendature and Definitions.

18.6.3. Brakes are free but must comply with Construction and Use Regulations. A hydraulic handbrake is permitted where a functioning mechanical system is also present. The hydraulic handbrake lever shall operate in an arc not exceeding 50 degrees from the horizontal.

18.6.4. Vehicles must display registration plates in compliance with the current Road Vehicles (Display of Registration Marks) Regulations.

18.6.5. Where an event includes any Section or Special Test held wholly or in part on private property all vehicles must carry a Small Spill Kit complying with J5.20.13. Recomended for events held wholly on the public highway.

18.6.6. For Road Rallies, Navigation Rallies and Targa Road Rallies held between 07.00 and 22.00hrs 18.1.2, 18.5, 18.5.1, and 18.5.9 do not apply. 18.6.1 is relaxed to permit advertising not exceeding 1250 sq cm in total.

Historic Road Rally Cars

Series Production Cars

Note: In this section the term MODEL refers to all variants of the same family of cars. To avoid misunderstanding, competitors are advised to obtain a copy of the appropriate manufacturer's documentation as to the standard specification of the car.

19.1. *Historic Road Rally Cars* are categorised in the following periods. A car will be dated by the specification presented and not necessarily by the date of build or registration:

19.1.1. *Historic Category 1 Road Rally Cars.* Cars of a specification valid before 1 January 1968 and compliant with 18.1.1 (except Sports Cars which need not be fitted with bumpers), 18.1.6, 18.3.3, 18.4, 18.5, 18.6 and 19.5.

19.1.2. *Historic Category 2 Road Rally Car.* Cars of a specification valid between 1 January 1968 and 31 December 1974 and compliant with 18.1 to 18.6 inclusive (see also 19.5).

19.1.3. *Historic Category 3 Road Rally Cars.* Cars of a specification valid between 1 January 1975 and 31 December 1981, compliant with their FIA Group 1 or 3 homologation papers, or be a Series Production Car, and comply with 18.1 to 18.6 inclusive (see also 19.5).

19.1.4. *Historic Category 2 and 3 Road Rally Cars* are permitted to use matt black bonnets and wing tops subject to 19.3.

19.1.5. *Historic Category 4(a) Road Rally Cars.* Cars of a specification valid between 1 January 1982 and 31 December 1985, or Historic Category 4(b) Road Rally Cars. Cars of a specification valid between 1 January 1986 and 31 December 1990, compliant with their FIA Group A or N homologation papers, or be a Series Production Car, and comply with 18.1 to 18.6 inclusive (see also 19.5).

Cars homologated in FIA Group A are permitted provided they are in standard production specification, the only modifications permitted (see also 19.3.) are to dampers, springs and brake friction material. Individual cars will only be accepted after receiving Motorsport UK approval. (R19.5.2.)

19.1.6. FIA Appendix K to the International Sporting Code: Historic Road Rally Cars fully compliant with the current FIA Appendix K categories T(Touring Car/Group1/Group N) and GT(Grand Touring Cars/Group 3) only. Cars must have been issued with a valid FIA Historic Technical Passport (HTP) or Historic Regularity Car Pass (HRCP), be in compliance with this document and the current FIA Appendix K at all times.

19.2. Deleted.

19.2.1. Deleted.

Permitted Modifications

19.3. Only period modifications used in rallying on the particular make and model of car are Permitted for Historic Road Rally Cars.

19.3.1. Modifications are only allowed if they were available before 1 January 1968 in the case of Historic Category 1 Road Rally Cars, before 1 January 1975 in the case of Historic Category 2 Road Rally Cars, before 31 December 1981 in the case of Historic Category 3 Road Rally Cars, before 31st December 1985 in the case of Historic Category 4(a) Road Rally Cars or before 31st December 1990 in the case of Historic Category 4(b) Road Rally Cars.

19.3.2. Roof vents are only permitted subject to the above.

Recommended Classes

19.4. Along with the mandatory requirements of 16.4.1, classes can be introduced based on capacity and/or age of vehicle.

19.4.1. It is recommended that they be the same as for Historic Stage Rallies.

19.5. Certain waivers may be available for Historic Road Rally Cars entered in Road Rallies and Rallies with Special Tests solely for vehicles manufactured before 31st December 1946.

19.5.1. Motorsport UK may also grant discretionary waivers for Historic Road Rally Cars complying with R19.1 in respect of 18.2 as appropriate, for Road Rallies and Rallies with Special Tests held between 07.00 and 22.00hrs, providing an Historic Grade Eligibility Scrutineer is appointed.

19.5.2. Application for these waivers should be made to Motorsport UK by the organisers of the specific event, giving full details of the waivers sought.

19.5.3. Any such waivers will be exclusive to an individual Motor Club and the nominated event.

19.5.4. Exceptionally, Motorsport UK may grant a written dispensation to use non-original parts, parts from a different model, or parts from a later period, provided that the use of these parts does not confer an advantage in either performance or reliability. Motorsport UK will give consideration to written requests from Competitors who are unable to source vital components.

Engine

19.6. Forced induction is Permitted if by means of a mechanically driven supercharger, or by an exhaust driven turbocharger if fitted as original equipment by the vehicle manufacturer.

19.6.1. Such cars will be classified as having an engine capacity increased 70%.

19.6.2. Induction air filter elements must be fitted that ensure the vehicle complies with noise regulations J.5.17.

19.6.3. Exceptionally, and with the permission of the Chief Scrutineer, those cars for which 5,000rpm is inappropriate may be tested at 3/4 of maximum rpm.

Wheels, Tyres and Brakes

19.7. Vehicles must always be fitted with tyres that are legal for use on the public highway.

19.7.1. The size of the wheel may not differ from that originally fitted by more than 10% on nominal diameter, and by 1 inch (25.4mm) on nominal width. The resultant track measurement must not differ from the original by more than 1 inch.

19.7.2. Rims must not exceed 6 inches.

19.7.3. The minimum diameter permitted is 15 inches, unless a smaller diameter was fitted as original equipment.

19.7.4. The tyre section, as marked on the side wall in millimetres or inches, must not differ by more than 1 inch (25.4mm) from that originally fitted.

19.7.5. The fitting of tyres with an aspect ratio of less than 65% is prohibited.

19.7.6. The fitting of a dual master cylinder, or any other type of device providing a simultaneous action on all four wheels and divided action on two wheels, is permitted, provided the original brake pedal and pivot point are used and they cannot be adjusted to affect brake balance by either the Driver or the Co-Driver when normally seated in the car.

19.7.7. A hydraulic handbrake is permitted where a functioning mechanical system is also present. The hydraulic handbrake lever shall operate in an arc not exceeding 50 degrees from the horizontal.

19.7.8. For Cars in Categories 2, 3 or 4, 19.7.2. and 19.7.5. do not apply where OE specification wheels are wider and tyre sections are less than those specified therein.

Miscellaneous

19.8. Vehicles must not use racing style numbers, nor carry advertising other than event sponsor decals. Pump fuel must be used as defined in Nomenclature and Definitions.

19.8.1. Where an event includes any Section or Special Test held wholly or in part on private property all vehicles must carry a Small Spill Kit complying with J5.20.13. Recommended for events held wholly on the public highway.

19.9. Standard Production Cars compliant with 19.1.3 and 19.1.5 must comply with 19.3 to 19.8.1 inclusive and the following regulations:

19.9.1. *Body (External).* No changes or additions may be made to the side or plan silhouettes to that offered by the manufacturers in either standard form or manufacturer's optional extra form. The replacement of any body panel with one constructed of different material from that fitted by the manufacturer is prohibited. Front and rear bumpers must be retained and be of the same dimensions and constructed of the same material as those fitted by the manufacturer

The fitting of any form of additional wheel arch extension is prohibited.

19.9.3. *Engine.* The engine fitted must in all respects conform to that fitted by the manufacturer for the model of vehicle.

To ensure oil and/or fuel are not deposited on the public highway sumpguards and tankguards may be fitted. It is permitted to fit a guard or guards to the silencing system that must retain at least the same number of silencer boxes and expansion chambers as catalogued for the car.

19.9.4. *Transmission.* The gearbox shall be that as fitted to the model of vehicle. Changes to the gearbox or final drive ratio other than those permitted by 19.3.1. are prohibited.

Endurance Road Rally

20.1. These vehicles must comply with 18.1 to 18.6 and the following:

20.1.1. Standard production specification engines limited to 1400cc naturally aspirated petrol, 2000cc naturally aspirated diesel, and 1400cc forced induction diesel are permitted.

20.1.2. The exhaust system is free but must retain the original exhaust manifold.

20.1.3. Where originally fitted with a catalytic converter, the standard part must be retained.

20.1.4. The transmission must be as originally fitted to the model of vehicle.

20.1.5. Any changes to the gearbox or final drive are prohibited.

20.1.6. The suspension type and mountings must remain the same as that fitted by the manufacturer.

20.1.7. The shock absorbers may be of any make and may be uprated from standard.

20.1.8. Adjustable spring platform struts are permitted. The mounting method and position must remain as specified by the manufacturer.

20.1.9. Springs are free but must retain their original location.

20.1.10. Bushes may be changed for similar polymer materials, but rose-joints or similar metal joints are prohibited.

20.1.11. Vehicles must be fitted with rollover protection to Section K, Appendix 2, Drawing 1 and seat belts to K.2.1.2 point. Sun roofs must either be fitted with safety film to J.5.20.8 or comply with Q.19.14.6.

20.1.12. Brake fluid, pads and linings, and stone protection are free.

20.1.13. For daylight Endurance Road Rallies it is Permitted to fit a sunstrip of no more than 90mm deep which may display the manufacturer's make or model, or the name of the event, or a recognised Motor Club, or a registered national charity, provided that this does not affect the Driver's view.

SPECTATE SAFELY!

ARI NEEDS **YOU** TO

Be alert!
Always expect the unexpected
Stay at the designated spectator areas
Remember that in an accident anything can happen
Always follow the instructions of the marshals
Your safety – Your life

ONLY A SAFE RALLY IS A GOOD RALLY

#AriNeedsYou RALLY FUTURE motorsportuk.org

20.1.14. Must use tyres from Tyre List IV.

20.1.15. All vehicles must carry a Small Spill Kit complying with J5.20.13.

Specific Regulations for Special Stage Rallies

21. Special Stage Rallies will be organised in accordance with 1 to 6 where appropriate, the following regulations and the Motorsport UK Stage Rally Safety Requirements which are published on the Motorsport UK website;

Definitions

Special Stage Rally

22.1. A Rally containing Special Stages joined by linking sections that may use the Public Highway.

Special Stage

22.2. A section of a Rally on roads or land for which the event has exclusive access, or on public roads closed by Government legislation specifically permitting closure for motor sporting purposes, where the marking for maintaining a time schedule forms a part of the Competition.

Single Venue Stage Rally

22.3. A Special Stage Rally which uses parts of stages more than four times during any day of the event.

Historic Special Stage Rally

22.4. As 22.1 and 22.3 above, but participation is limited to cars complying with the appropriate Technical Regulations for Historic or Post-Historic Special Stage Rally Vehicles.

Rally Time Trial (44)

22.5. A Single Venue Stage Rally run over a Stage not greater than 4 miles in length.

Duties and Responsibilities of the Clerk of the Course

23.1. For all Special Stage Rallies the Clerk of the Course must be licensed by the Motorsport UK (G24).

23.1.1. Applicants will only be considered if they have been appointed by an organising club entitled to run such events.

24.1. The Clerk of the Course must ensure compliance with the following:

24.1.1. Deleted.

24.1.2. Deleted.

24.1.3. All other motor sporting users of venues to be used as special stages must be notified of arrangements for using the venue.

24.1.4. Competitors must be seeded numerically in order of anticipated performance, with the first competitor having the best performance potential, unless Motorsport UK has given prior approval to the contrary.

24.1.5. The Chief Scrutineer must be appointed from the list of Motorsport UK Technical Officials.

24.1.6. That a Safety Plan is produced in accordance with the Motorsport UK Stage Rally Safety Requirements and that all officials involved in the running of the event are aware of the plan and where appropriate have received training.

24.2.1. A Stage Commander should be appointed for every stage, with the responsibility for ensuring that the stage complies with the regulations and that an adequate number of marshals are appointed.

24.2.2. Marshal locations should be selected so as not to place them in areas where they may be exposed to significant risk.

24.2.3. In allocating individual Marshals to specific locations, care should be taken to ensure that less experienced Marshals are accompanied by experienced colleagues.

24.3.1. An Event Safety Officer must be appointed, who is experienced in the current operation of special stages and who understands the potential of Rally cars in differing weather conditions.

24.3.2. The Event Safety Officer must be assisted by a Spectator Safety Officer who is responsible for specific arrangements to accommodate spectators in suitable areas, to prevent their accessing other areas and to make suitable access facilities for spectators' use.

They will ensure that;

(a) There should be a copy of the Safety Code on display at all entrances where the public are likely to enter, and in areas considered to be hazardous, including escape routes and prohibited areas.

(b) All and any publication giving event information, online or in print, whether published for spectators or officials, must include a copy of the Safety Code.

24.3.3. The Event Safety Officer is responsible for ensuring that there are effective arrangements to supplement the general marshalling strength organised by the Stage Commander as follows:

(a) There must be pre-determined arrangements available to every Stage Commander for summoning appropriate emergency services, via rendezvous points if necessary, to the scene of an incident.

(b) At each stage, unless the complete route is visible from the Start or Finish areas, there must be provision of an effective radio communications network, operated through a nominated Controller under the direction of the Clerk of the Course, linking Officials at Start, Finish and intermediate points with Rescue and Medical Services. The frequency must be secure from misuse and be either the Motorsport UK Safety Frequency or a privately licensed frequency to Ofcom Regulations. The Controller must be experienced in the use of radios and in controlling a network, and must ensure the disciplined use of the radios. Where the Motorsport UK Safety Frequency is used, the Radio Controller must hold a valid Motorsport UK Radio Controllers Licence.

Notes on radio procedure are available from Motorsport UK.

24.4. Written instructions on the operation of stages, prepared in accordance with the Motorsport UK Stage Rally Safety Requirements, must be made available to all Officials and Marshals. These must clearly establish:

24.4.1. That the number of cars to be sent through any Stage before the Competition shall be in accordance with the Motorsport UK Stage Rally Safety Requirements.

24.4.2. The crew of each Safety Car must have specific duties, based on the current Motorsport UK Safety Car Roles and Responsibilities.

24.4.3. No stage must start until the Motorsport UK Safety Delegate, or subsequent designated Safety Car crew where applicable, has confirmed that it is ready for Competitors and that the Marshals have all spectators on the stage under their control and direction (36.5).

24.4.4. There must be no movement of any vehicle or of the rescue services once the stage has opened without the specific approval of the Stage Commander, and then only after suspending the stage and being satisfied that it is cleared of competing cars.

24.4.5. On any special stage where extreme circumstances make it necessary to neutralise the competition e.g. where spectator safety is compromised, or to authorise the movement of non-competing or rescue vehicles, the system of Red Flags must be in place. These should be located at mid stage rescue points, all locations where a rescue/emergency vehicle may re-enter the stage following a shortcut and at each mandatory Radio Point (29.5). Red Flags will be displayed at all mandatory Radio Points preceding the incident, only on the specific instruction of the Clerk of the Course or Stage Commander.

Red Flags must be prominently displayed (held out steady not waved) by a designated marshal who MUST wear a marshals' tabard.

Red Flags shall measure a minimum of 60cm x 70cm.

(i) Competitors who have been shown a Red Flag will be given a notional time for the stage.

(ii) The time of the deployment of the Red Flags will be recorded and notified to the Clerk of the Course.

(iii) No flag other than a Red Flag may be deployed at any point along the route of the special stage.

24.4.6. Deleted.

24.4.7. Under no circumstances will any car be allowed to drive in the reverse direction of the stage.

24.4.8. Detailed emergency procedures and equipment which must be made available by the Event Safety Officer.

24.4.9. The priorities in dealing with an incident are to deal first with those who are injured (whether Competitor, Official or spectator) by removing them in a suitable vehicle if it appears prudent to do so, and then to deal with the vehicles if they constitute a hazard to the continued running of the stage or to property.

24.4.10. No Competitor will be Permitted a re-run of a special stage (25.6.6).

24.4.11. The system of ensuring that Competitors are positively monitored and checked through a stage must be explained. Organisers may either use numbered stage Time Cards or note the previous Competitor's Competition number with the next Competitor to leave the Start.

24.4.12. All non-competing vehicles must be parked in an appropriate place at least 30m from a road used as a Special Stage, between a point before the Start control and a point 100m beyond the Finish stop control.

24.4.13. Non-competing cars required solely for purposes of safety may be parked at any place designated appropriate by the Stage Commander and/or Event Safety Officer.

24.4.14. Any road that may form an escape between the start and stop controls must be kept clear and unobstructed for a distance of at least 100m, bearing in mind the potential approaching speed of Competitors.

24.4.15. The location of any competing car that fails to complete the stage must be reported to the Stage Commander.

24.4.16. The information required by the Clerk of the Course to consider 24.5 is available if the stage is interrupted or stopped for any period of time.

24.4.17. Reasonable precautions must be taken to protect private property situated adjacent to any stage against damage.

24.5. Should the normal running of a Special Stage be stopped after the passage of one or more Competitors for any reasons whatsoever, and it proves impossible to allow other Competitors to cover the stage competitively, the Clerk of the Course may give to each crew which has not been able to cover the stage in the normal manner a notional time corresponding to the slowest time set up to the moment of interruption.

24.5.1. If it appears that the slowest time represents a complete anomaly, the next slowest time may be retained (and so on until the 5th slowest time).

24.5.2. However, no crew that is totally or partially responsible for stopping a stage may benefit from this measure. If they finish the stage, they will be given the time that they actually set even if this is greater than the time awarded to other crews.

24.5.3. In the case of an event being permitted to seed Competitors in reverse order of anticipated performance, the Clerk of the Course may give Competitors a notional time corresponding to the fastest time set at the moment of interruption, or apply the next fastest time (up to the 5th fastest time) if the fastest time represents a complete anomaly.

24.6. The Clerk of the Course has discretionary powers to impose a penalty in accordance with 32.2(gg) or 32.13(gg) on any Competitor who causes or is part of a serious blockage on a Special Stage, whether intentionally or otherwise, if their actions prevent any other Competitor from completing the stage competitively. The Clerk can also impose further penalty under C.2.1 as appropriate.

24.7. Judges may be appointed to adjudicate on:

24.7.1. Failure to comply with 25.5.

24.7.2. Failure to comply with 25.6.

24.7.3. False starts on Special Stages.

24.7.4. Unauthorised use of auxiliary lights.

24.7.5. Unauthorised possession of pace notes, radio equipment (25.1, 25.9).

24.7.6. Unauthorised servicing.

24.7.7. Unauthorised smoking.

24.7.8. Sound.

24.7.9. Violation of out of bounds areas.

24.7.10. Violation of the regulations regarding crash helmets, seat belts or flame retardant overalls.

24.8. Driving Standards Observers may be appointed to adjudicate on:

24.8.1. Excessive vehicle sound (observed during the event).

24.8.2. Excessive speed.

24.8.3. Driving in a manner likely to bring Motor Sport into disrepute.

24.9. Checks operated by Judges or DSOs need not be manned for the whole period during which Competitors may report, and may operate on a random basis.

Organisers should include in their SRs the following:

24.9.1. *Judges and/or DSOs will be appointed to report on sound levels. Excessive sound will include instantaneous occurrence of noise such as that produced by backfiring caused by anti-lag systems. The penalty for excessive sound may go as far as disqualification.*

24.10. Any Competitor driving at an excessive speed, recklessly, or in a manner likely to bring Motor Sport into disrepute, or convicted of any driving offence committed during the event may be disqualified.

24.10.1. The Official in charge of any control or check may mark or withhold a Competitor's road book, or Time Card if the vehicle concerned has suffered damage to its exhaust system.

24.11. The Clerk of the Course can appoint Officials empowered to search Competitors and their vehicles for unauthorised Pace Notes (25.9).

24.11.1. There should be two such Officials, one male to check male Competitors and one female to check female Competitors.

24.12. An organiser may permit the supply of subjective route notes. This must be stated in the SRs and the subjective route notes must be prepared by a Motorsport UK registered supplier.

Competitors

25.1. Competitors and their associated service vehicles and personnel may only fit or use radio transceiving equipment and frequencies that are licensed according to Regulations issued by Ofcom.

25.1.1. They must not use or carry any radio transmitting device that operates on, or interferes with, the Motorsport UK licensed Frequencies.

25.1.2. Contravention of these regulations will be penalised in accordance with 32.2(p) or 32.13(q).

25.2. Competitors must present at scrutineering a valid Motorsport UK Competition Car Log Book/Vehicle Passport obtainable from Motorsport UK Scrutineers by appointment (46.1.3).

25.3. In conjunction with scrutiny of the car, Drivers' and Co-Drivers' crash helmets, FHR Devices, and overalls must be produced for approval.

25.3.1. All crew members must wear a crash helmet bearing a Motorsport UK approval sticker (K.10.1 to K.10.3.1) and a safety belt throughout any Special Stage.

25.3.2. The crew must also wear flame resistant overalls homologated to FIA 8856-2000, FIA 8856-2018 or FIA 1986 Standard, and balaclavas to FIA 8856-2000 or FIA 8856-2018 Standard. Competitors are also strongly advised to wear Flame Resistant gloves, socks, and underwear. Plastic shoes (such as trainers) should be avoided. Attention is drawn to (K.9.1.5 to K.9.3).

25.3.3. The crew must also wear FIA approved FHR Devices, fitted in accordance with K10.4.

25.3.4. Competitors are strongly recommended to carry a First Aid Kit.

25.4. Competitors must carry an A4-size white board with a red SOS on one side and black OK on the other (letters to be a minimum of 12cm high with a minimum stroke width of 1.5cm), with means to secure them on display for oncoming competitors.

25.4.1. In the case of an accident where urgent medical attention is required, the red SOS sign should be displayed as quickly as possible to alert following cars and aid any helicopter attempting to assist.

25.4.2. Any crew that sees a red SOS sign displayed on a car, or sees a major accident where both crew members are inside the car but not displaying the SOS sign, must immediately and without exception stop to give assistance.

25.4.3. All following cars must also stop and the second car arriving at the scene must inform the next radio point.

25.4.4. Subsequent cars must leave a clear route for emergency vehicles.

25.4.5. The Clerk of the Course may award a discretionary time to any Competitor delayed in such circumstances.

25.4.6. Any crew which is able to but fails to comply with the rule will be reported to the Clerk of the Course who may impose penalties.

25.4.7. In the case of an accident where medical intervention is not required, the OK sign must be clearly shown to following vehicles, and to any helicopter attempting to assist. If the crew leave the vehicle, the OK sign must be left clearly visible to other Competitors. The Emergency Red Warning Triangle should be placed at least 100m down the stage, appropriate to the approaching speed of following competitors to provide a visible advanced warning.

25.4.8. Any crew failing to comply will be subject to a penalty at the Clerk of the Course's discretion.

25.4.9. Competitors who misuse the SOS or OK signs will be penalised and may be reported to Motorsport UK for further action.

25.5. Drivers must conform to the Medical Requirements specified in H.10.

25.5.1. All Competitors must comply with any instructions in the Road Book concerning stopping at road junctions.

25.5.2. Failure to comply will be penalised as in 32.2(b) or 32.13(c).

25.5.3. Crew members must not smoke during any stage.

25.6. During a special stage, the prescribed route must be followed and any direction signs displayed are mandatory.

25.6.1. Competitors overshooting the Stop line at the end of any stage are forbidden to reverse back to the Control.

25.6.2. They are also forbidden to traverse any part of a Special Stage in the opposite direction to rally traffic.

25.6.3. Competitors must not voluntarily leave the prescribed route of a Special Stage without the express permission of the Stage Commander.

25.6.4. On passing a Red Flag displayed by a marshal wearing a marshals' tabard, the driver MUST immediately and significantly reduce speed as well as being prepared to stop at any time; at no time must they overtake any safety vehicle they encounter on the special stage route. The driver must then follow the instructions of any marshals and/or stage safety personnel and maintain this reduced speed until leaving the special stage.

Failure to comply with this rule will incur a penalty at the discretion of the Clerk of the Course.

25.6.5. They must not continue until advised to do so by an Official 24.4.4 and 24.4.5.

25.6.6. Competitors may only attempt a Special Stage once.

25.6.7. Re-runs are not Permitted (24.4.8).

25.7. When manual timing is to be used for a special stage, and following the Stage Start Marshal's instruction to a Competitor that they are next to start, the starting procedure is as follows:

25.7.1. The Marshal should give a loud verbal indication of 30 seconds, 15 seconds, 10 seconds and 5 seconds to go, and then count down orally each second 5-4-3-2-1-GO. Upon the signal GO a visual starting signal must be given, which will normally be the raising of a flag from the bonnet (not the windscreen). Any other visual signal to be used must be described in the event SRs.

25.7.2. When automatic timing is used, the SRs must detail the precise method which will be in operation, with a clear description of the countdown method and the signal to GO. Making a false start will be penalised in accordance with 32.2(e) or 32.13(f).

25.7.3. If an automatic method of recording a false start is to be used the false start detector should be placed between 30cm and 40cm in front of the actual Start Line and the method of use and implementation must be described in the event SRs. The timing system must be capable of recording the time that the car passes through the false start detector. These times must be made available to the organisers, with any competitors recording a false start reported to the Clerk of Course.

25.8. Stages where Competitors are required to start at intervals of less than one minute may dispense with the 30 seconds to go advance warning.

25.8.1. This revised procedure must be advised in the SRs.

25.8.2. Any crew refusing to start a Special Stage at the time and in the position allocated to it may be given a 10 minute penalty (32.2(d)or 32.13(e)) which may be extended as far as disqualification on the discretion of the Clerk of the Course, whether the special stage is run or not.

25.9. Unless specifically allowed by the SRs, the use of or possession of Pace Notes or any other means of giving a Competitor advice relating to the traversing of a Special Stage on a Multi-Venue Stage Rally that has not been provided by the Organisers is forbidden (24.7). Minor annotations to supplied Subjective Route Notes are permitted but must not be rewritten into any other format. Contravention will be considered to breach 24.7.5 and penalised in accordance with Charts 32.2 (q) or 32.13 (r).

25.9.1. On any Single Venue Stage Rally taking place on a venue that is currently, or was previously, a licensed Race, Speed or Kart circuit, or any airfield type venue (disused or not), the use, provision or possession of such information, unless in accordance with 25.9.2. is prohibited and cannot be varied by the SRs.

25.9.2. This does not however preclude a crew from recording or annotating information during an event on the route instructions issued by the organisers for use later on in the same event.

25.9.3. Neither does it preclude the use of Ordnance Survey maps of 1:25,000 or 1:50,000 scale along with others that are specified in the SRs as being necessary to complete the route.

25.9.4. The only supplementary information that may be shown on the maps is information given by the Organisers (including route details).

25.9.5. Contravention will be penalised as in 32.2(q) or 32.13(r).

Route

26.1. The onus of following the correct route rests with the Competitor who must visit controls and checks in the order set out in the Road Book, unless otherwise specified.

26.1.1. No private road must be used by Competitors Unless specific permission to do so is given in the Road Book.

26.1.2. A control or check shall be considered to extend for 50m around the actual point at which Officials are making their records, unless clearly visible signs are displayed to define a different area.

26.1.3. If the direction of approach to, or departure from, a control or check is specified, non-compliance with the requirement, or passing the control or check when travelling in other than the specified direction, or visiting the control or check more than once, may involve a penalty.

26.1.4. Officials will be on duty at all controls. If at any control the Officials are not present during the whole period when a Competitor can report, all performances at that point will be ignored in compiling the results (except as provided for in 24.9, 32.2(l) or 32.13(m)).

26.1.5. All performances will also be ignored if a control or check is not sited at the location specified in Official documents.

26.1.6. The onus of ensuring that all the information required is clearly and legibly recorded at the appropriate time and place rests with the Competitor.

26.1.7. Should any entry on a Time Card not be legible or not appear authentic it may be considered not to have been made. Organisers may refer to Marshals' check sheets in case of doubt.

26.1.8. If there is a discrepancy between the time allowance shown by the Organisers on the Time Cards and that shown on any other document, the Time Card will be taken to be correct, unless previously amended in an Official bulletin.

26.2. It is not Permitted to define the route of a special stage by grid references or any other method requiring Competitors to choose their own route.

26.2.1. Any Flying Finish should be located at a point where cars can be expected to be travelling slowly as a result of a preceding bend or hazard.

26.2.2. The Flying Finish line must be at least 200m before the stop line which should be at least 100m before any public highway. Bad weather, slippery conditions and the potential speed of cars crossing the Flying Finish line may require these distances to be extended.

26.2.3. The area between the Flying Finish and the stop line should be free from bends, sharp or deceptive corners, or hazards such as gates, etc. This area is prohibited to spectators.

26.3. Officials should be clearly identifiable and wherever possible:

26.3.2. Be placed in sight of all signs and arrows, and at prohibited areas.

26.3.3. Be placed where the public are expected to arrive to watch the stage.

26.3.4. Have some pre-arranged system for warning spectators of the approach of cars.

26.3.5. Be under the control of a Sector Marshal if appropriate.

26.4. Where a Special Stage forms a continuous circuit, Competitors must not be required to complete more than two laps.

26.4.1. Organisers should allow at least 100m separation from the start of the stage before Competitors join other cars already on the stage.

26.4.2. On any stage rally which is not run under a Single Venue Stage Rally Permit, the maximum number of competitive passes in any one direction over any stage or any part of a stage is limited to four.

26.5. *Stage timing throughout an event will be to the preceding second if manual timing is to be used.

26.5.1. Automatic timing can be to the preceding 1/10th of a second, but only if the intention to do so is stated in the SRs.

26.5.2. The timing of any section should be recorded in a way that Competitors can verify its correctness. This must prohibit the 'setting back' of the section finish watch.

26.5.3. The only timing that can be considered is from the Standing Start to the Flying Finish line.

26.5.4. No Competitor may gain an advantage by exceeding the specified average speed.

26.5.5. The time based on this average shall be referred to as the Stage Bogey Time.

26.6. Competitors must not be started from any stage start at intervals of less than one minute, unless in accordance with the following procedures:

26.6.1. Starts of between 30 seconds and one minute interval are Permitted provided that the criteria below are met and that no undue difficulties are foreseen:

(a) The stage does not exceed a total length of four miles if on an unsealed or mixed surface, or eight miles if completely on a sealed surface.

(b) The stage has no split route and is neither a currently nor previously a licensed Race, Speed or Kart venue or airfield (disused or otherwise).

(c) No part of any stage traverses the same section of route during the running of that stage, or as part of another stage running concurrently.

(d) If the stage constitutes a continuous circuit, it must be less than one lap.

(e) Competitors have been seeded by the Organisers by performance in accordance with 24.1.4, without dispensation.

(f) Suitable timing arrangements have been made at the Finish line.

26.6.2. Authorisation for stages not covered above must be obtained in writing from Motorsport UK and will only be considered when the following information has been submitted:

(a) The individual stage name, number and location.

(b) The length of the stage.

(c) The type of surface (forest, tarmac, etc).

(d) The average width of the road.

Motorsport UK

OPEN
Monday – Friday
9.00–17.00

Tel: 01753 765000

Membership Team:
Tel: 01753 765050

Website:
www.motorsportuk.org

(e) Diagram(s) of the venue showing stage routes and safety provisions.

(f) The number of times Competitors are attempting the stage.

(g) If the Competitors are attempting the stage more than once, the time interval between their first and second run, and the possibility of catching previous Competitors.

(h) Whether Competitors attempting their second run will be interposed with those still attempting their first.

(i) Whether the stage has a split route, and if so how far this is into the stage. On unsealed surfaces the stage must not consist of more than 21/2 miles of common route.

(j) Whether extreme weather (eg heavy rain, dust, etc) will adversely affect a fair Competition.

(k) Competitors have been seeded by performance in accordance with 24.1.4, without dispensation.

(l) Suitable timing arrangements have been made at the Finish Line.

26.7. No practising or testing is Permitted on any Special Stage before any event unless specifically authorised by Motorsport UK.

26.8.1. Any access to any part of a stage, whether from a car park or through entrances, should be protected by warning notices as specified in D.31.1.1 and D.31.1.4 and is subject to the requirements of D.32.1.

26.8.2. There should be a copy of the Safety Code on display at all entrances where the public are likely to enter, and in areas considered to be hazardous, including escape routes and prohibited areas.

26.8.3. Deleted.

26.8.4. When an admission charge is made for public attendance or where significant numbers of the public are expected to attend suitable arrangements must be made by the organisers for dealing with the first-aid requirements of spectators.

26.8.5. Where the nature of the venue is such that it is either impractical to apply such precautions or access by the public cannot reasonably be controlled, then only a car park charge may be levied. Motorsport UK approval is not required when imposing this charge.

26.8.6. On events where there is a published programme, or where information is published which gives details of the location of special stages, a copy of the Safety Code for the guidance of spectators should be included.

26.9. Deleted.

26.9.1. Deleted.

26.9.2. Deleted.

26.9.3. Deleted.

26.10. Means of access onto the stage should be closed by barriers and signs sufficient to prevent any non-competing vehicle gaining access. Warning notices as detailed in D.31.1. should be displayed.

It should also be impossible for anyone on foot to get on to any stage through normal access roads or tracks without:

26.10.1. Being aware of it.

26.10.2. Having been seen by an Official.

26.10.3. Having seen a warning notice.

26.10.4. Having seen the Safety Code.

Types of Section

27. The following terminology and restrictions apply to all stage rally sections. No other title or description will be valid:

Road Section

27.1.1. Any section of the route of a Special Stage Rally (excluding control and service areas), whether on the public highway or not, which links Special Stages. (38.1.7.)

27.1.2. When on the public highway these sections must comply with 2.3.2.

27.1.3. Competitors must not use any auxiliary lights in road sections except in conditions of reduced visibility as permitted by law. Any forward facing lights, additional to the headlight system, sidelights and indicators, are considered to be auxiliary lights.

Special Stage

27.2.1. A section of a Rally on roads or land for which the event has exclusive access, or on public roads closed by Government legislation specifically Permitting closure for motor sporting purposes, where the marking for maintaining a time schedule forms a part of the Competition.

Special Stages

28.1. Unless approved in writing by Motorsport UK, Special Stages must not include any checks or controls or other requirements that might require or encourage Competitors to stop during the stage. Applications shall be made in accordance with 26.6.2.

28.1.1. Special Stages must be over a distance of not less than half a mile and no stage may exceed 20 miles in length without written permission from Motorsport UK.

28.2.1. If the stage is wholly on a sealed surface, no Competitor should be able to achieve an average speed of more than 75mph.

28.2.2. If the stage is run partly or wholly on unsealed surfaces, no Competitor should be able to achieve an average speed of more than 70mph.

28.3. Special Stages should not use any sections of a venue in opposite directions at the same time, unless there is at least a 15m separation between the two routes with a continuous barrier to prevent a car crossing.

28.3.1. Crossroads used twice must preserve this separation.

28.3.2. The barrier must consist of one or more of the following: tyres banded in threes, straw bales, earthbanks or similar immovable objects.

28.3.3. Motorway cones or blocking tapes are not suitable.

28.4. Special Stages should not use any currently or previously licensed Race, Speed or Kart circuit, nor any airfield (disused or not) unless Motorsport UK has specifically approved the stage layouts and safety precautions.

28.4.1. These Stages should also not be routed closer than 75m to any parked aircraft, unless there is a solid physical barrier at the edge of the course protecting the aircraft, and a gap of 45m from the barrier to the aircraft.

28.5. At the start of every Special Stage the organisers must provide a Medium Spill Kit.

Arrows and Signs

29.1. The correct route should be indicated to Competitors by arrows and signs, and by physical blockage of all but the correct road. These indications shall, wherever possible, be consistent with Appendix 1, Drawing number 29 and with the following:

29.1.1. Arrowing should be reduced to a minimum and placed only at junctions. Really acute bends or hazards, where a drastic reduction in speed is required, should be marked by a caution or bend sign. Arrows must not be used to define chicanes. A chevron board, Appendix 1 Drawing number 29.1.1, showing the entry to the chicane must be placed in the full view of Competitors. This board must have minimum dimensions of 76cm x 61cm.

29.1.2. Signs should be placed approximately 1.2m from the ground. Wherever possible arrows and signs should be of Day-Glo red or orange and should be easily visible to Competitors. To avoid confusion, multiple signs on one post should be avoided. Advance warning signs for junctions should be between 50m and 100m before the junction.

29.1.3. Two arrows should be visible on any junction, fixed so as to form a 'gate' through which Competitors will pass. Arrows may be angled to show the severity of the junction, indicated by one of four basic positions, vertical, horizontal, raised or lowered by 45°. An example of the method used must be shown to Competitors before the event.

29.1.4. A wrong direction should be indicated by a standard No Entry sign (a red disc with a white bar) and all but the correct road should be visibly blocked by means of tree trunks, brushwood, ropes, tape, etc, except as provided for in 29.1.5. Alternatively, and only for use on closed road stages, the No Entry Sign may be replaced by a Chevron Board and tape as shown in Drawing 29 (alternative).

29.1.5. In the case of wholly tarmac stages that are run on public roads closed for the purpose under Government legislation, the preceding regulations apply to all road junctions. However, it is not mandatory to block off private driveways unless through the layout of the stage the Organisers consider that they would constitute a hazard for Competitors. In these circumstances they should be blocked off with tape and at least a No Entry board displayed and notified as in 29.1.6.

29.1.6. Along with the arrows and signs displayed on the Special Stage, each Competitor must be issued with a Tulip diagram of each stage showing location or hazard numbers or letters, and indicating the intermediate mileages between junctions, danger spots or hazards and the direction to be taken.

29.1.7. For stages on airfield type venues it is permissible to substitute a detailed sketch diagram. This diagram must be approved by Motorsport UK before the event. This approval will constitute automatic permission to dispense with Tulip diagrams.

29.1.8. The warning signs for each location or hazard detailed in the sketch map or Tulip diagram must display the corresponding location or hazard number or letter.

29.1.9. Hazards should be indicated by a single exclamation sign between 50m/100m before the hazard.

29.2. Deleted.

29.2.1. Deleted.

29.2.2. Deleted.

29.2.3. Deleted.

29.2.4. Deleted.

29.3. If a section of road is used twice on stages where the route divides, or where two roads merge, the junction itself should be clearly marked by a white board at least 76cm x 61cm illustrating the junction.

29.3.1. Figures on this board should be at least 15cm high.

29.3.2. The junction should be preceded by a similar diagrammatic sign in advance of Motorway type count down boards with diagonal bands positioned approximately 100m and 200m before the junction.

29.3.3. Judges of Fact should be placed at any split junction to note and report for penalty any Competitor overshooting and reversing back against the route of rally traffic.

29.4. Where stage routes merge on a lapping stage, the angle between the two roads (prior to the common route) should be no more than 45° to each other, and on joining should run separately, but in parallel, for at least 100m before merging.

29.4.1. Signs will be shown to Competitors as follows. These signs should have a minimum size of 76cm x 61cm. See Appendix 1, Drawing number 29.4.1.

29.5. Radio Point signs as follows must be displayed at and before all designated Radio Points (24.4.5) detailed in the Road Book as issued to Competitors, other than at those locations signed in accordance with 29.4.1 (see Appendix 1, Drawing number 29.5).

Controls (2.4)

30.1. Controls will open 15 minutes before the due time of arrival of the first car, and close on the direction of the Clerk of the Course taking into account the due time of arrival of the last competing car.

30.1.1. The SRs may specify a different opening period.

30.1.2. The time of arrival at or departure from a control will be the time at which the Time Card is presented by the Competitor concerned, providing all crew members and car are within the control area.

Control procedures

30.2.

(a) The check-in procedure begins at the moment the car enters the time control area.

(b) The actual timing and entry of the time on the time card may only be carried out if the two crew members and the car are within the control area. Between entering the control area and the control, the crew is forbidden to stop for any reason or to drive at an abnormally slow speed.

(c) The check-in time shall correspond to the exact moment at which one of the crew members hands the time card to the appropriate marshal who will enter on the card the actual time at which the card was handed in, and nothing else.

(d) The target check-in time is the responsibility of the crew alone, who may consult the official clock.

(e) The crew will incur a penalty for early arrival if the car enters the control area before the minute preceding the target check in minute. The crew will not incur any penalty for lateness if the act of handing the card to the appropriate marshal takes place during the target check-in minute.

(Example: A car has left the previous stage finish at 11.04.40 on a section for which the target time is nine minutes. It is therefore due at the next time control at 11.13. It arrives at the yellow advance control board at 11.08, stopping before the yellow board. The car is permitted to enter the control area at any time after 11.12.00. The time card may be handed in at any time between 11.13.00 and 11.13.59, and a time of 11.13 will be recorded.)

(f) If it is found that a crew has not observed the rules for the check-in procedure, the marshal at the control must make this the subject of a written report to be sent to the Clerk of the Course.

30.2.1. The time of reporting at controls will be recorded to the preceding whole minute when penalties are imposed per minute (for example 09 minutes 59 seconds will be recorded as 09 minutes).

30.2.2. Where a control at the end of a section timed to the second (or to the second and part thereof) also forms the start of a section timed to the minute, the time of departure will be considered as being the same as arrival, but ignoring any seconds or parts thereof.

30.3. Exceptions to 30.2 are:

30.3.1. In the event of a competing car obstructing other Competitors through being halted or unduly slowed down near a control, the Officials may instruct the Driver to proceed and may then record the time as the time when this instruction is given.

30.3.2. In the event of a Competitor presenting a Time Card to Officials at a time when the car is outside the control area, the Officials have discretion as to whether or not to make a record on the Time Card.

30.3.3. At the end of a Rally or of any day of a Rally Competitors are allowed to check in in advance of their due time. This must be specifically authorised by the rally organisers in the SRs or an Official bulletin. Competitors arriving early must have their due time entered on the Time Card; those arriving later than their due time must have their actual time of arrival entered.

Timing

31.1. All Special Stage rallies may use either Target Timing or Scheduled Timing.

31.1.1. A Motorsport UK or Regional Association approved Rally Timekeeper must be appointed as a Chief Timekeeper for all stage rallies that use manual timing.

31.1.2. Stage rallies intending to use any form of automatic timing must appoint a Motorsport UK-approved Rally Timekeeper of National Rally or higher grade who holds a Certificate of Competence issued by the manufacturer of the equipment to be used.

31.1.3. Times will be recorded to whole minutes on all sections, except Special Stages which will be timed to the nearest preceding whole second, unless the SRs specify that timing will be to the nearest preceding 1/10th of a second (32.2(f) or 32.13(g)).

31.1.4. All Timekeepers will be Judges in respect of time recorded.

***Definitions for Target Timing**

31.2.1. *Target Time* is the time specified to cover the distance between two consecutive controls. A Competitor can calculate their Due Time of Arrival at any Time Control by adding the Target Time for the section to their actual time of departure from the preceding Time Control. Each period of time shall be treated individually and no penalties incurred will apply to any subsequent section. However, lateness taken over Target Time on Road Sections and Special Stages is cumulative and cannot be reduced.

31.2.2. *Bogey Time* is the time specified for a Competitor to complete a Special Stage without incurring penalty and must comply with 28.2, 26.6.

31.2.3. *Stage Maximum Time* is the maximum time penalty that can be applied on a Special Stage and will be the Target Time for the stage. It must be specified on the Time Card.

31.2.4. *Cumulative Lateness* is the sum of times in excess of Target Time taken over each section, and once lost cannot be regained.

31.2.5. *Maximum Permitted Lateness* is the amount of cumulative lateness which if exceeded from the previous Main Control will result in a Competitor being deemed to have retired. This will be 30 minutes unless the SRs specify a different period, which may not be less than 15 minutes for rallies where part of the itinerary traverses public roads open to the public.

31.2.6. *Penalty-free Cumulative Lateness.* The SRs must specify the amount of cumulative lateness, if any, allowed free of penalty before a Competitor will be penalised.

31.2.7. *Dead Time* is the authorised time between booking in at the end of one Target-timed section and the commencement of the next section. The time must be spent entirely within a control zone. Dead time will have no effect on penalties or cumulative lateness incurred elsewhere.

31.2.8. *Delay Allowance* is a penalty-free allowance granted to specific Competitors following a delay, under the instructions of an authorised Official. It has the effect of extending the Target Time for those Competitors on that section only. Such delay allowance must be recorded in writing on a Competitor's Time Card by the Official.

31.2.9. *Main Controls* are situated at the Start and Finish of a Rally, immediately before and after any Rest Halt, and at any other specified point. At a Main Control after a Rest Halt Competitors will (unless the SRs specify otherwise) restart at one minute intervals:

- In number order, or
- In the order of their arrival at the Main Control preceding the Rest Halt, or
- In the order of their arrival at some other preceding control, or
- In the order of General Classification at a specified point if interim results are available.

The method used must be specified in an Official Instruction. Each Competitor must be given a due starting time from any Main Control (Out), and any difference between this time and their actual starting time will be counted towards cumulative lateness, and a Time Penalty applied (unless the SRs specify otherwise).

Regrouping Controls

31.2.10. The Road Book will specify these controls where Competitors not disqualified by having more than the Maximum Permitted Lateness at the control start the next section with zero lateness.

Special Stage Arrival Control

31.2.11. At this Time Control a Marshal enters a Competitor's time of arrival and the provisional starting time for a Special Stage which must be a minimum of three minutes after the arrival time in order to allow the crew to prepare for the stage. The area between the Special Stage Arrival Control and the Stage Start is Parc Fermé. At the Special Stage Start, the Marshal will enter the actual Start time which will normally correspond with the provisional Start time. The Start will then be given in accordance with 25.7.

Special Stage Finish Control

31.2.12. Competitors will receive their Special Stage Finish Times in hours, minutes and seconds at the Special Stage Finish Control. This time in hours and minutes will be the Start time for the next section.

Penalties

32.1. Competitors will receive penalties on Special Stages as follows:

Under Bogey Bogey Time

Over Bogey but under Actual time taken

Stage maximum

Over Stage maximum Stage maximum time.

32.1.1. Organisers may require any Competitor who is late to reduce their lateness by either foregoing or reducing any period of time provided for remaining at a control or Official halt.

32.1.2. If the need arises for an Organiser to extend Maximum Permitted Lateness, this can only be done at a point on the route at which Competitors are required to report to avoid disqualification. Maximum Permitted Lateness can then only be extended for the following part of the route and cannot be applied retrospectively for the earlier sections. These provisions are subject to standard condition 4 of the Motor Vehicles (Competitions and Trials) Regulations where they apply.

32.1.3. No penalty-free lateness or Official delay allowance that has been either reduced or foregone as Permitted by 32.1.1 may be reclaimed. However, this does not exclude fresh claims based on new circumstances.

Penalties

32.2. See Appendix 1, Chart 32.2.

Definitions for Scheduled Timing

32.3. Standard Time is the time of day a notional Competitor number zero would be due at any control or check.

32.3.1. Scheduled Time is the actual time of day each Competitor is required to be at any specific point.

32.3.2. Scheduled Time can be calculated for any point by taking a Competitor's Competition number, multiplying by the time interval between Competitors at the start, and adding the result to the standard time at that point.

32.3.3. Delay Allowance is an allowance free of penalty granted to specific Competitors following a delay under the instructions of an authorised Official of the event. Any Delay Allowance must be recorded in writing on the Competitor's time card by that Official.

32.3.4. Due Time is the time a Competitor is due at any control or check inclusive of any previous lateness.

32.3.5. Penalised Time is the difference between Due Time and an earlier or later arrival time.

32.3.6. Penalty Free Lateness allows a Competitor late at one control to be an equivalent amount late at a succeeding control without incurring further penalty.

32.3.7. Outside Total Lateness (OTL) is the point where a Competitor is considered not to have visited a control or check being more than 30 minutes past the Scheduled Time (including any delay allowance), unless the SRs specify a different period, which may not be less than 15 minutes for rallies where part of the itinerary traverses public roads open to the public.

32.4. The Organisers can require any Competitor who is late to reduce their lateness by either foregoing or reducing any period of time provided for remaining at a control or official halt.

32.4.1. Competitors may themselves reduce lateness without penalty in the following ways, unless either forbidden to do so by the SRs or if by so doing they commit a breach of 32.5.

(a) By reporting at any control following one at which a penalty was applied for lateness at any time not earlier than Scheduled Time.

(b) By missing a Control or Controls. The Competitor will be penalised in accordance with 32.13(a) or 32.13(b) for every control missed. On rejoining the route at a control at the end of Road Section, the Competitor will be permitted to restart without further penalty at any time between their original Scheduled Time and their Maximum Permitted Lateness in relation to their original Scheduled Time.

(c) If the need arises for an Organiser to extend Maximum Permitted Lateness, this can only be done at a point on the route at which Competitors are required to report to avoid disqualification. Maximum Permitted Lateness can then only be extended for the following part of the route and cannot be applied retrospectively for earlier sections.

These provisions are subject to Standard Condition 4 of the Motor Vehicles (Competitions and Trials) Regulations where applicable.

32.4.2. No Penalty Free Lateness or official delay allowance that has been either reduced or foregone as Permitted by 32.4 can be reclaimed. However, this does not exclude fresh claims based on new circumstances.

32.5. A Competitor found to have traversed a distance greater than four miles between two consecutive time controls in less than three-quarters of the time specified by the Official time schedule will be penalised in accordance with 32.13(l). In calculating the penalty, any fraction of minute will be ignored. The ¾ rule does not apply to sections of less than 8 minutes scheduled duration.

This does not preclude the organisers providing specific sections for time recovery.

For example:

32.5.1. In a nine minute section, a penalty is imposed if a Competitor completes a section in less than six minutes.

32.5.2. In a 10 minute section – seven minutes.

32.5.3. In an 11 minute section – eight minutes.

32.5.4. In a 12 minute section – nine minutes.

32.6. Times will be recorded to whole minutes unless the SRs state otherwise.

32.6.1. Any timing to less than one minute will be recorded on equipment as detailed in 2.7.

32.6.2. Competitors will be timed by the Official timepieces in the charge of Officials, unless the SRs state that watches carried by the Competitors can be used.

32.7. Bogey Time – See 31.2.2.

32.8. Stage Maximum Time – See 31.2.3.

32.9. Main Time Controls – See 31.2.9.

32.10. Regrouping Controls – See 31.2.10.

32.11. Special Stage Arrival Control – See 31.2.11.

32.12. Special Stage Finish Control – See 31.2.12.

Penalties

32.13. See Appendix 1, Chart 32.13.

Documentation

33.1. The Road Book or Time Card must indicate:

33.1.1. The description of each section (Road Section, Special Stage, Service Area, Regroup, etc) (27).

33.1.2. The time allowed to traverse the route between each Time Control and all the information necessary to enable Competitors to comply with 2.3.2.

33.1.3. What information the Organisers require to be recorded and the places at which these records will be made (26.1.6), except as provided for in 24.9.

33.1.4. Which checks will be manned by Officials (26.1.4), except for checks established in accordance with 24.9.

33.1.5. Which portions of the route will be timed to less than one minute.

33.1.6. Any 'out of bounds' areas to be respected.

33.1.7. The position of any junction at which the Competitor is required to stop.

33.1.8. The areas where Competitors are required to observe special restrictions as to driving behaviour (i.e. Quiet Zones, etc).

33.1.9. The order in which controls and checks must be visited.

Medical and Safety Cover

Single Venue Stage Rallies

34.1. At each venue there must be a Doctor or Motorsport UK Registered Paramedic and a Motorsport UK-Licensed Rescue Unit.

34.1.1. It is mandatory that a Motorsport UK Licensed Recovery Unit (or if unavailable a Commercially Operated Recovery Unit) is placed at or near those stage start locations where a Rescue Unit is positioned.

34.1.2. The Chief Medical Officer or Chief Paramedic, being a Doctor or Motorsport UK Registered Paramedic, is responsible – in consultation with the Clerk of the Course and the Event Safety Officer – for ensuring that the required level of medical and rescue cover is provided and for the detailed organisation of doctors, the planning and deployment within stages, the organisation of ambulance meeting points and the notification of hospitals in relation to the stages.

34.1.3. The Doctor or Motorsport UK Registered Paramedic and Safety Officer in liaison with Stage Commanders should be aware of the evacuation routes from the stage and rendezvous points.

34.1.4. The Chief Medical Officer may, following consultation with the Clerk of the Course, appoint a deputy of suitable grade who could take over the Chief Medical Officer's duties in an emergency.

Stage Rallies (other than Single Venue Stage Rallies)

34.2. At Clubman, Interclub and National Multi-Venue Stage Rallies, there must be a Doctor or Motorsport UK Registered Paramedic and a Motorsport UK-Licensed Rescue Unit at every stage (or group of stages (with a maximum three in close proximity to each other).

A Chief Medical Officer or Chief Paramedic, who must be a doctor or Motorsport UK Registered Paramedic, must be appointed who is responsible – in consultation with the Clerk of the Course and the Event Safety Officer – for ensuring that the required level of medical and rescue cover is provided and for the detailed organisation of doctors, the planning and deployment within stages, the organisation of ambulance meeting points and the notification of hospitals in relation to the stages. The Chief Medical Officer or Chief Paramedic may, following consultation with the Clerk of the Course, appoint a deputy of suitable grade who could take over the Chief Medical Officer's duties in an emergency.

34.2.1. Those stages without the immediate presence of a Motorsport UK Rescue Unit should position a Motorsport UK-Licensed SSU at the stage start.

34.2.2. For every stage over nine miles long, in addition to the above and at a suitable mid-point, there must be a Doctor or Motorsport UK-Registered Paramedic and a Motorsport UK Licensed Rescue Unit or a Motorsport UK-Licensed SSU.

34.2.3. It is mandatory that a Motorsport UK-Licensed Recovery Unit (or if unavailable a Commercially Operated Recovery Unit) is placed at or near those stage start locations where a Rescue Unit is positioned.

International Stage Rallies (other than FIA Championships)

34.3. At every stage start there must be:

34.3.1. A doctor or Motorsport UK-Registered Paramedic.

34.3.2. A Motorsport UK-Licensed Rescue Unit.

34.3.3. A Motorsport UK-Licensed Recovery Unit or, if unavailable, a Commercially Operated Recovery Unit.

34.3.4. For stages over nine miles long, these requirements must be repeated at a suitable mid-point.

International Stage Rallies (FIA Championship)

34.4. Medical and safety cover must be according to current FIA Regulations.

International and National Rallies

35.1. It is recommended that the Chief Medical Officer is appointed from the Motorsport UK Register and is approved for this grade of rally.

35.1.1. Also a senior Medical Officer should be appointed on each stage, and be positioned at the stage Start to work in close co-operation with and under the instructions of the Stage Commander.

General

36. ALL THE ABOVE REQUIREMENTS SHOULD BE REGARDED AS MINIMUM STANDARDS OF COVER, HIGHER STANDARDS SHOULD ALWAYS BE AIMED FOR.

36.1. It is recommended that doctors carry all equipment that they feel necessary for the performance of their duties. The following is suggested:

- Airways (two)
- Cervical collar
- Two large field dressings
- Powerful hand torch
- Space blanket
- First aid kit.

36.2. It is recommended that Organisers make available a full resuscitation kit.

36.3. All accidents and incidents involving injury must be reported in writing by both the Medical Officer and Stage Commander to the Clerk of the Course.

36.3.1. A completed Motorsport UK report form, signed by the doctor, should be sent to the Medical Consultant at Motorsport UK.

Emergency Vehicles

36.4. There are three kinds of Rally emergency vehicles:

- Rally Recovery Units
- Rescue Units
- Stage Safety Units (SSUs).

36.4.1. Their equipment and licensing criteria are listed in G.32 and Section F.

36.4.2. To assist Organisers and maintain safety cover, unless licensed vehicles are present, SSUs should be used to provide rescue, first aid and fire fighting at an incident as quickly as practicable (i.e. starting from the beginning of the stage and proceeding in the direction of the stage).

36.4.3. It is recommended that there is an SSU at each stage start.

Safety Cars

36.5. The only category of Safety Car that may be driven through a stage at near competitive speeds will be the Zero Car.

36.5.1. Safety Cars will be identified by carrying markings as specified in the Motorsport UK Safety Car Roles and Responsibilities., e.g. Spectator Safety, 000, 00, 0 and Sweeper as appropriate.

36.5.2. No other Official car will carry such markings. All other sanctioned vehicles will be classified as Official Vehicles.

36.5.3. The Zero Car will be the last vehicle to traverse a stage before the first Competitor, unless the Stage Commander or Clerk of the Course authorises otherwise.

36.5.4. The Zero Car will only stop in a stage in the case of emergency.

36.5.5. Safety Cars must be fitted with an effective method of communicating with Rally Control.

36.5.6. Except for Class eligibility, the Zero Car must pass the same pre-event scrutiny as Competitors, including Sound Testing.

36.5.7. It is strongly recommended that they have a current Competition Car Log Book/Vehicle Passport.

36.5.8. There will only be two crew members in the Zero Car who must wear overalls, helmets, FHRs and seat belts mandatory for Competitors. Fire extinguishers must be fitted and armed as for Competitors.

36.5.9. Crew members of each Safety Car must be signed-on Officials, At least one crew member of each safety car team must have attended a Motorsport UK Safety Car Training Session.

36.5.10. At least one member of the safety car team must have been involved in pre-event planning. All crew members of the team must be fully briefed on the safety plans for the event by this person or another senior event official.

36.5.11. No Driver who is barred from holding a Competition Licence can drive an Official, Safety or Zero car through a special stage.

36.5.12. Detailed Guidelines on Motorsport UK Safety Car Roles and Responsibilities are published on the Motorsport UK Website which supplement the above requirements.

Fire Extinguishers

37. Fire extinguishers must be available in any area defined as a Service Area and any area in which competing cars are assembled awaiting their attempt at a stage, and at stage Stop Lines.

Servicing and Organised Assistance

38.1.1. Organised assistance (service) may be Permitted on Special Stage Rallies if the SRs allow and providing that the Organisers have provided suitable service areas and a specific time allowance.

38.1.2. *Organised assistance anywhere other than in Permitted areas is forbidden.

38.1.3. Service vehicles may be required by the SRs or the Official Instructions to follow a prescribed route to and from service areas. All other areas would then be 'Out of Bounds' to service vehicles and crews.

38.1.4. In any area where Service is not Permitted, the presence of a service vehicle, or any vehicle from which equipment or parts are supplied or obtained, or the setting up or the collection or the use of equipment previously deposited, will be considered to be servicing.

38.1.5. The above Regulations do not prohibit Organisers advising Competitors of any garages en route, where facilities are available.

38.1.6. Paragraph 38 does not prevent Competitors from making their own vehicles safe to drive.

38.1.7. Competitors may only refuel in areas, not being road sections, specifically designated by the organisers or by using commercially available pump fuel dispensed directly from pumps at filling stations on the rally route. No one must be within the vehicle e.g. driver, navigator, service crew, and the engine must be stopped throughout any refuelling operation.

38.2. Crews may work unassisted on their own cars, using equipment carried in their car, in 'No Service Areas' except:

(a) Within 100m of any Control.

(b) Between a Special Stage Arrival Control and the Special Stage Start Control.

(c) In any Parc Fermé.

38.2.1. The only work permitted in these areas is the following (unassisted): Cleaning lamp glasses, windscreens, windows, identification markings and vehicle registration numbers.

38.2.2. Except in the areas listed above, Competitors may also work on their cars with the assistance of other Competitors or any nationally recognised breakdown service or commercial garage not associated with the Entrant and not organised in advance. Such service vehicles will not be allowed to enter Official service areas.

38.3. Competitors are responsible for ensuring that their service crews understand and comply with Regulations, and if Official Service Plates are issued, that at all times service vehicles bear the Official Service Plate.

38.3.1. A Competitor may be fined or otherwise penalised by the Clerk of the Course if the crew of any service vehicle associated with their entry contravenes any regulation or any Official instruction, or acts in a manner contrary to the interests of the event. Competitors may also be fined, but not otherwise penalised, for breach of Road Traffic Laws by their service crews.

Service Areas

39.1. All Service Areas should be under the supervision of a Safety Officer, who should have suitable means of making contact with the Emergency Services.

39.1.1. Special care must be taken to ensure that Service Areas are kept secure from spectators and that all aspects of Health and Safety Regulations are observed.

39.1.2. Adequate fire extinguishers must be available at the site.

39.2. No assistance may be expected from Organisers. Competitors are responsible for ensuring that they are supplied with fuel, oil, water, etc, even though Organisers may give advice as to where such supplies may be obtained.

39.2.1. A car may not be moved other than by its own power except:

(a) By a ferry.

(b) By outside means for a minimum distance necessary to extricate it from difficulty.

(c) By gravity.

(d) By its crew.

39.3. During the course of an event, competitors are not permitted to use, or be directly or indirectly concerned in the use of, helicopters or fixed wing aircraft in the vicinity of the event (whether in connection with servicing, aerial surveillance or any other reason whatsoever), unless previous authority has been obtained from Motorsport UK in writing and in compliance with CAA regulations (E.2.2.6).

39.3.1. Before considering any application for authorisation Motorsport UK must be satisfied that any liabilities they consider apply to the activities, including indemnity cover for Motorsport UK, the event promoters, Organisers and the landowner, have been made available by the operator on their behalf to specified minimum requirements.

39.3.2. Any application must be made at least 14 days before an event.

39.3.3. In accordance with CAA regulations, no aircraft is allowed within 500ft of the route, or within 3,000ft of any large crowd.

Results

40.1. To be classified as a finisher, a Competitor must report to all controls listed in the Road Book except as provided for in 32.2 (a) where two-thirds of the stage must have been completed and report to the final control within the maximum lateness specified, with the car in which they started.

40.1.1. Competitors start with zero time penalties and the results are established by adding together the times taken during the Special Stages and the time penalties incurred on the road sections, together with all other penalties expressed in time. The Competitor with the lowest total will be the winner, and so on.

40.1.2. If there is a tie, the Competitor who accomplished the best time for the first Special Stage will be judged the winner. If this is not sufficient to resolve the tie, the times of the second, third, fourth, etc, Special Stages will be taken into consideration, unless the SRs specify another method of resolving ties. This regulation can be applied at any time during the rally.

40.1.3. Competitors at the conclusion of their Competition must sign a declaration form confirming they have not been involved in any incident that may have caused damage to persons or property, or alternatively give details of any such incident. Failure to comply will be penalised in accordance with 32 and may be reported to Motorsport UK for further disciplinary action.

40.1.4. Competitors who retire will be required to submit this form to the Secretary of the Meeting within 72 hours of the event. Failure to return the form may be penalised by a fine of up to £100.

40.1.5. There must be no awards for Competitors who equal or improve upon the time schedules for any sections, nor for the fastest times or fewest penalties on any sections.

Rejoining the Rally (Rejoin Point)

40.1.6. Competitors may only rejoin the rally after missing a Control or Special Stage where permitted by the SRs.

40.1.7. Having missed a Control or Special Stage a competitor may only rejoin the rally in their seeded position. Where no such provision is made in the Rally's schedule to provide a restart list the competitor may only rejoin at a designated rejoining point as specified in the SR's, within but not ahead of 15 places of their original seeded position.

Additional Regulations for Specified Types of Event

Single Venue Stage Rallies

41.1. *The SRs must state whether the Public Highway is being used or not.

41.1.1. No stage route may be used more than twice.

41.1.2. For a stage route to be recognised as different, it must vary by at least 20% of the stage route if run in the same direction, or be reversed.

41.1.3. No part of a stage may be used in any one direction more than 12 times during the event.

41.2.1. Fire extinguishers must be available in any area defined as a Service Area and any area in which competing cars are assembled awaiting their attempt at a stages, and at stage Stop lines.

41.3.1. Written permission must be obtained in advance from Motorsport UK regarding any other activity to be held at a venue to ensure whether suitable insurance can be arranged.

41.3.2. PR work, consistent with 3, must be undertaken irrespective of whether or not the public highway is used on an event.

41.3.3. Venues where spectators are encouraged to attend should have a resident Spectator Safety Car equipped with a PA system and a radio on the frequency to be used on the event.

41.4.1. A Co-Driver who has signed on must be carried in each competing car.

41.4.2. No practising is Permitted.

41.4.3. (See 25.9.1).

Historic Special Stage Rallies

42.1. Historic Category 1, Historic Category 2, History Category 3 and Historic Category 4 cars must compete in separate categories with separate results and awards in order to give a clear distinction between the three periods of cars. See 49.6 for recommended Classes.

Special Stage Practice/Training Events

43.1. Any practising or training event at which members of a Motorsport UK-registered Club are acting in a managing or controlling capacity as representatives require the specific permission of Motorsport UK in the form of a Permit.

43.1.1. Motorsport UK will not permit more than three Clubs to jointly organise such an event.

43.1.2. Motorsport UK will appoint an Observer to all Special Stage Rally practice/training events and the appropriate fees will be charged.

43.1.3. Participants in all practice/training events must sign the usual indemnity specified in D.13, as well as a declaration that their vehicle is in a fit condition for the event.

43.1.4. Permit fees will be in accordance with current rate for a Interclub event. Insurance at the maximum Special Stage rate per Competitor will be payable.

43.1.5. There must be no spectators and entry to the venue must be controlled.

43.1.6. Stages must be organised to the requirements of 23.1 to 24.11 and 28.1 to 29.5 and the definition of a Practising/Training Event must be complied with.

43.1.7. No more than six attempts at any one stage layout will be Permitted.

43.1.8. Although no awards or published times are Permitted, a Bogey Time must be set for the stage (based on 32.1) and this time and the length of the stage must be notified in writing to the participants.

Rally Time Trials (22.5)

44.1. A Rally Time Trial is a Special Stage Rally and will be run in accordance with Section R except for the following.

44.1.1. All cars must comply with 46 to 49. No Passengers can be carried during practice or competitive runs, unless authorised by Motorsport UK (higher Permit Fees apply).

44.1.2. The Clerk of the Course may authorise re-runs. Results need not be based upon competitors cumulative times, but may be based upon selective aggregate times (best 2 of 3 for example) or be purely on best time.

44.1.3. The starting procedure must comply with that of a stage, but an arrival control is not required. It should be run over a distance not greater than 4 miles.

44.1.4. In all other respects a Rally Time Trial must comply with Section R, Competitor eligibility, technical and vehicle safety eligibility and stage safety requirements.

44.1.5. Rally Time Trials are not valid for upgrading a Stage Rally Competition Licence.

Junior Rally Driver Championships

45.1. Motorsport UK may approve championships for Junior Rally Drivers complying with the following:

45.1.1. All events comprising the championship must be individually permitted Single Venue Stage Rallies open only to Junior Rally Drivers.

45.1.2. Events may only take place at a single venue and all stages, road sections and service areas must not cross or traverse any public highway including Footpaths/Bridleways/Restricted Byways/Byways Open to All Traffic or unclassified county roads.

45.1.3. Proposed Stage Diagrams must be submitted for authorisation at least 3 months prior to the event in the same manner as 26.6, in order for Motorsport UK to inspect the venue.

45.2.1. Drivers must be at least 14 years old, and may continue as a Junior Rally Driver until 31st December in the year of their 17th birthday.

45.2.2. The Drivers Competition Licence shall be endorsed Junior Rally Formulae Only and will be held on their behalf by the Championship Co-ordinator.

45.2.3. Drivers must be of a minimum height of 1.4m.

45.2.4. Co-drivers must hold a valid Competition Licence, and ideally be a licensed BARS Instructor.

45.2.5. Co-drivers must be 21 years or over, not be a parent/guardian of the driver and meet the qualifications of a Stage Rally National 'A' Licence.

45.3.1. Vehicles must be Series Production Cars fully compliant with 46.1.1.

45.3.2. The maximum engine capacity may not exceed 1200cc, naturally aspirated.

45.3.3. The engine and transmission must be standard and unmodified.

Technical Regulations

46. In addition to complying with Section J all cars competing in Stage Rallies must comply with the appropriate parts of the following:

Cars issued with a CCLB before 1st January 2009 see 47.1.1.

Special Stage Rallies

Cars Eligible

46.1. All cars must comply with Section J of these regulations, and all statutory regulations concerning the construction and use of vehicles. In addition cars must:

46.1.1. Be currently registered and taxed as a private car, unless specific event regulations relax the requirement for taxation, by virtue of the entire event taking place wholly on private property.

46.1.2. Have registration documents and, where a car is required by law to have a certificate, a valid MOT Certificate where appropriate. These documents must be produced at scrutineering for all events, irrespective of whether or not part of the event takes place on the Public Highway.

46.1.3. Have a valid MSA/Motorsport UK Competition Car Log Book/Vehicle Passport that must be produced at scrutineering (J.2 and J.3).

46.1.4. Display registration plates in compliance with the current Road Vehicles (Display of Registration Marks) Regulations.

46.1.5. All vehicles must carry a small spill kit complying with J.5.20.13.

46.2. Category 1. Those that have been homologated in Groups 'A' or 'N' of the FIA Appendix 'J', or Groups 1, 2, 3 or 4 of the 1981 FIA Appendix 'J', Non homologated Series Production Cars, or Specialist Rally Cars.

46.2.1. A Specialist Rally Car is a vehicle of which at least 20 examples are manufactured within a consecutive twelve month period and is fitted with a Series Production Car Engine or Specialist Competition Engine.

46.2.2. Modifications are free within Motorsport UK Vehicle Regulations and as defined below in 48.

46.2.3. The car must be in the configuration as supplied by the manufacturer, with the engine (any Series Production Car Engine or Specialist Competition Engine) in the original location.

46.2.4. Cars must retain the original number of, and location of, driven wheels, Front Wheel Drive (FWD), Rear Wheel Drive (RWD) or Four Wheel Drive (4WD), except where a 4WD car, other than a Specialist Rally Car, is converted to Two Wheel Drive (2WD) without structural alteration.

46.3. Category 2. Any car not complying with 46.2.1- 46.2.4 that may be authorised for use at the discretion of Motorsport UK including cars homologated and remaining fully compliant with FIA R/GT regulations.

46.3.1. Such authorisation will only be granted for cars which retain the original manufacturer's chassis/bodywork/ unitary construction.

46.3.2. Substitution by a space frame chassis will not be accepted.

46.3.3. Original manufacturer's bodywork must be utilised.

46.3.4. Any modifications homologated by the FIA may be incorporated.

46.3.5. Replica copies of manufacturers homologated body parts/aerodynamic devices will not be accepted.

46.3.6. Manufacturers of very low volume numbers of cars will be able to apply for baseline specification registration prior to sale to individual customers.

46.3.7. The conversion of front wheel drive cars to rear wheel drive (or four wheel drive) or of rear wheel drive cars to four wheel drive is permitted subject to the bodyshell construction alterations from the bulkhead rearwards being limited to those detailed in FIA Art.279.10.3.10 and shown in FIA Appendix J Drawings 279-1 and 279-2. Additionally where rear wheel drive cars are converted to four wheel drive the bodyshell forward of the front bulkhead may be modified solely to allow fitment of front driveshafts.

46.3.8. All materials added must be ferrous and must also be welded to the chassis/bodywork/unitary construction.

46.3.9. Doors and windscreen must remain in the manufacturer's original material.

46.3.10. Cars must be fitted with an engine in compliance with 48.2 and the following:

46.3.11. If forced induction is used the turbo/super charger must comply with 48.2.5.

46.3.12. The vehicle may not be used in competition until the Competition Car Log Book/Vehicle Passport has been validated by Motorsport UK and returned to the vehicle owner.

46.4. Category 3. Aluminium or Steel monocoque 2-wheel drive normally aspirated petrol or forced induction diesel production cars of a model first made on or after 1st January 1991.

46.4.1. All external panels including bumpers must be of the original shape and material. Side and rear windows may be replaced by plastic which must be mounted in the original mountings 48.1 applies except for 48.1.2, 48.1.3, 48.1.4, 48.1.5, 48.1.7.

46.4.2. Carpets, headlining, soundproofing and rear seat may be removed, front seats to 48.10.6. All other interior trim may be removed except for the door cards/trim which must be retained and fitted in the original location. Steering wheel may be changed. All other controls, switches and dash must be retained and fitted in the original location.

46.4.3. Engine must comply with 48.2.9 and the following;

(a) Original induction system including air filters with a restrictor fitted upstream of the throttle body in compliance with FIA App J Article 256, every car will have a specified restrictor diameter which may be altered at any time.

(b) Only the parts controlling the quantity of fuel delivered may be changed.

(c) Standard exhaust manifold and systems must be retained, standard stroke, maximum over bore +0.60 mm.

(d) Camshaft, valves and pistons are free.

46.4.4. Original transmission must be retained, using any optional or homologated ratios. Free differentials may be replaced by mechanical limited slip differentials. Unless fitted as standard, active differentials are not permitted.

46.4.5. Suspension must comply with 48.4.1 to 48.4.10 inclusive except that parts and systems forbidden in 48.4.9 and 48.4.10 are permitted when fitted as original or optional equipment by the manufacturer

46.4.6. Wheels and tyres must comply with 48.5.1 to 48.5.14 inclusive except for the following;

Wheels must be the original width, 48.5.5. does not apply, wheel diameter is free.

46.4.7. Brakes must be of original specification and comply with the following;

Friction material free, backplates may be removed or deformed, ABS may be disconnected, a hydraulic hand brake is permitted.

46.4.8. Minimum vehicle weight will be as per the manufacturer's data for that model.

46.4.9. Under shields, sump and tank guards, strut braces may be fitted.

46.4.10. The following apply as written:

Fuel Systems with 48.7.

Electrical systems with 48.8.

Safety items with 48.10

46.4.11. The vehicle may not be used in competition until the Vehicle Passport has been validated by Motorsport UK and returned to the vehicle owner.

47.1.1. Stage Rally Cars with a CCLB/VP issued before 1st January 2009, and which complied with H265 or H266 of the 2008 regulations, must comply with 46.1, 48.1.1, 48.1.8, 48.1.9, 48.1.11, 48.1.13, 48.2.5, 48.5, 48.6, 48.7, 48.8 and 48.10, from 1st January 2012. CCLBs/VPs for these vehicles remain valid until such time as the vehicle requires a full re-inspection following rebuilding, but may be returned to Motorsport UK for updating ownership, colour and other minor details.

47.1.2. All Stage Rally Cars with a CCLB/VP issued before 1st January 2009 and which complied with H267 of the 2008 regulations, must comply with 46.1, 46.3, 48.1.1, 48.1.8, 48.1.9, 48.1.11, 48.1.13, 48.2.5, 48.5, 48.6, 48.7, 48.8 and 48.10, from 1st January 2012 and must have been re-inspected and issued with a new CCLB/VP prior to that date.

47.1.3. Any Stage Rally Car with a CCLB/VP issued before 1st January 2009 must comply with 48.1.10. and 48.1.12.

Body

48.1. The term body shall include bodywork, bodyshell, unitary construction.

48.1.1. Have a bulkhead between any fuel tank and filler and driver/passenger compartment sufficient to prevent the passage of flame or liquid. Where a fuel tank constitutes part of a bulkhead between passenger and luggage compartment, an additional bulkhead must be fitted. Additional fuel tank protection may be required.

48.1.2. All bodyshells, inclusive of removable panels and parts must be of the vehicle manufacturers specified materials, specifications and minimum thickness with the exception of bonnet, front wings, bumpers, hatchbacks, tailgates and boot lids which may be of alternative materials. Seam welding, and localised gussets/reinforcement is permitted.

48.1.3. With the exception of cars accepted under 46.3, front wings and rear wings/rear quarter panels, and inner wings, may be modified solely for the purpose of fitting wheel arch extensions.

48.1.4. With the exception of cars accepted under 46.3 (see 46.3.7), and cars with modifications conforming to their homologation papers (46.2) floor pans, bulkheads and transmission tunnels may not be modified other than by localised alteration to accommodate the fitting of an alternative engine and/or gearbox and/or differential and/or axle, seats and exhaust.

48.1.5. Provision of access holes purely to facilitate use of an alternative or modified gearbox control system and/or braking system is permitted.

48.1.6. The internal routing of pipes and wires, and safety equipment is permitted.

48.1.7. The conversion of left to right hand drive is permitted including necessary accompanying modifications.

48.1.8. Glass sunroofs are not permitted. Sunroofs may be of a non-shattering solid rigid material other than glass. Any sunroof must be firmly secured in the closed position. The sunroof aperture may be closed by solid material permanently fitted in place.

48.1.9. Windscreens to be of laminated type only.

48.1.10. Side windows if of glass must be of laminated or toughened glass and if of toughened glass must be coated on the inside with a clear transparent safety film. The thickness of this film must not be greater than 100 microns.

48.1.11. Where advertising is allowed on windscreens it must not obscure the driver's vision nor cover more than one third of the depth of the visual area of the windscreen.

48.1.12. The fitting of mud flaps of a flexible material of 4mm minimum thickness behind each wheel extending to a minimum of 40mm each side of the tyre tread and to within 80mm of the ground when the car is unoccupied is mandatory.

48.1.13. Towing eyes of adequate strength and size must be fitted to, or carried for fitting to, the front and rear of the vehicle. They must be painted a distinctive and contrasting colour.

Engine

48.2. Comply with the following specification and actual capacity limits:

48.2.1. Production Car Engines:

(a) Petrol engines with a maximum of six cylinders, forced induction up to 2000cc with a 34mm restrictor or up to 2500cc with a 32mm restrictor, and diesel engines with forced induction up to 2500cc with a 37mm restrictor.

(b) Naturally aspirated with a maximum of six cylinders, and more than 2 valves per cylinder – up to 3000cc.

(c) Naturally aspirated with a maximum of six cylinders, and a maximum of 2 valves per cylinder – up to 3500cc

(d) Rover V8 pushrod engines up to 4000cc, utilising the original Rover head castings, and limited to either a maximum of 4 carburettor chokes or a single throttle body and the original plenum chamber.

48.2.2. Metro 6R4 2500cc and 2800cc (Single Plenum) engines complying with MSA Specification, exclusive to 6R4s.

48.2.3. Specialist Competition Engines:

(a) Naturally aspirated.

(b) No more than four cylinders.

(c) No more than four valves per cylinder.

(d) Maximum capacity of 2,500cc.

48.2.4. Production Car Engines with a maximum of 2 rotors.

(a) Rotary engine equivalence 1.7. Forced induction rotary engines equivalence (1.7. x 1.7.) = 2.89.

(b) Rotary engines will be considered equivalent to 4 valves per cylinder petrol engines in respect of the maximum engine capacity including the application of equivalency factor (a) above.

48.2.5. Forced Induction engines must be fitted with a restrictor at a maximum of 50mm from the extremes of the compressor blades. The restrictor orifice to be to the dimensions currently in force in FIA Appendix 'J'. Where there are two forms of forced induction fitted, the restrictor must not exceed the appropriate FIA Appendix 'J' dimensions. Provision must be made for fitting seals to the unit(s). A fee if £3.00 is payable for the sealing of turbo chargers.

48.2.6. With the exception of cars accepted under 46.3, a car may be fitted with a different engine, not exceeding 25% increase of the capacity of the model, when it was supplied as original equipment by its manufacturer.

48.2.7. The engine capacity of FIA R/GT cars complying with 46.3. shall be limited to the current FIA Regulations.

48.2.8. Historic Rally Cars that are fully compliant with 49 are permitted without a restriction on engine capacity in Stage Rallies.

48.2.9. Engine Oil Systems – Unless equipped with a closed loop system, a Catch tank of at least a one litre capacity to be incorporated in the oil breather system.

Transmission and Gear Selection Systems

48.3. The transmission system is free, including gear selection system which may be modified or replaced by an alternative system.

48.3.1. The use of active front and rear differentials, i.e. any system acting directly on the differential adjustments (initial stress, pressure…), is forbidden, except for cars originally homologated by the FIA. Only entirely mechanical systems are allowed. None of the parameters of the front and rear differentials can be modified except with the help of tools when the car is stopped.

48.3.2. Passive viscous differentials are considered mechanical and are permitted.

Suspension

48.4. With the exception of cars accepted under 46.3, and cars with modifications conforming to their homologation papers (46.2):

48.4.1. The suspension must retain the operating principle and utilise the mounting points as provided by the vehicle manufacturer.

48.4.2. Strengthening of the sprung parts of the chassis and bodywork is allowed provided that the material used is the same material as the chassis/bodywork and follows the original shape and is in contact with it.

48.4.3. Springs, shock absorbers, anti-roll bars and control arms and links may be uprated.

48.4.4. Only mechanically operated anti-roll bar systems are authorised.

48.4.5. The anti-roll setting can only be adjusted directly by the driver, using an exclusively mechanical system without external power.

48.4.6. Any connection between dampers is forbidden.

48.4.7. Any connections between front and rear anti-roll bars are forbidden.

48.4.8. The ride height must be adjustable only with the use of tools and when the car is immobile.

48.4.9. Any servo control activating a power circuit acting directly or indirectly on the suspension parts is forbidden.

48.4.10. Any electronic control system for the shock absorbers is forbidden.

Wheels and Tyres (L.3)

48.5.1. Not be fitted with spiked or studded tyres or any non-skid attachments, other than chains if permitted in SRs.

48.5.2. Have all spare wheels securely fastened in position.

48.5.3. Have complete wheels (flange + rim + tyre) free providing that they can be housed within the original bodywork (including wing extensions) and that they do not exceed the widths in relation to the cubic capacity of the car:

Up to and including 1600 cc: 8in

Over 1600 cc: 9in.

48.5.4. Note. Wheel widths relate to the capacity of the vehicle, inclusive of the forced induction coefficient.

48.5.5. Rim diameters may be increased or decreased by up to a maximum of 2in. However, the rim diameter must not exceed 18in.

48.5.6. Wheels do not necessarily have to be the same diameter.

48.5.7. The complete wheel shall be measured with the tyre at normal running pressure.

48.5.8. The measurement of the width will be taken at the widest point of the complete wheel, above hub level.

48.5.9. Wheel fixing by bolts may be freely changed to fixing by pins and nuts.

48.5.10. Must have tyres complying with Section L.

48.5.11. The use of any device for maintaining the performance of the tyre with an internal pressure equal to or greater than atmospheric pressure is forbidden.

48.5.12. The interior of the tyre (space between the rim and the internal part of the tyre) must be filled only with air or nitrogen. This does not preclude the use of inner tubes.

48.5.13. The use of tyre heating devices is prohibited.

48.5.14. For all unsealed surface stage rallies subject to 1.1.9 only those tyres specified in Tyre List 6 are permitted.

Braking Systems

48.6. Braking systems may be modified including fitment of uprated components, conversion of drum brakes to disc brakes and use of alternative friction materials.

48.6.1. The use of non-metallic brake discs is not permitted.

48.6.2. Deleted.

Fuel Systems

48.7. If the filler cap is of the quick release type or where the vehicle has been fitted with a non-standard filler, be fitted with a recessed fuel filler cap.

48.7.1. Fuel lines may be installed within the driver/passenger compartment on safety grounds (J.5.13).

48.7.2. Cars must be fitted with a self seal connector of a type complying with J5.13. Except as provided for in J.5.13.7 cars issued with a current Competition Car Log Book/Vehicle Passport prior to 1st January 2009 are not required to have a self seal connector.

Electrical

48.8. There are restrictions concerning the use of auxilary lights which are detailed in the sporting regulations (27.1.3).

Vehicle Weight Limits

48.9. All homologated cars must conform to the minimum weights stated in their homologation documents.

	Cars post 1/1/1982 & 4WD Specialist Rally Cars	Cars up to 31/12/1981	2WD Specialist Rally Cars
Up to 1000cc	660kg	655kg	
Up to 1400cc	700kg	700kg	620kg
Up to 1600cc	770kg	740kg	670kg
Up to 2000cc	850kg	810kg	720kg
Up to 2500cc	1080kg	880kg	770kg
Up to 3000cc	1150kg	945kg	880kg
Up to 3500cc	1230kg	1005kg	
Up to 4000cc	1310kg	1075kg	

48.9.1. All non-homologated cars must conform to the minimum weights in the table above. The only exceptions are vehicles that have a specified minimum weight recorded in their MSA/Motorsport UK Competition Car Log Book/Vehicle Passport.

48.9.2. The checking of vehicle weights will be as set out in FIA Appendix J.

48.9.3. Note. Minimum weights relate to the cubic capacity of the car, inclusive of the forced induction coefficient.

Safety

48.10.1. Have, as a minimum, a ROPS complying with K.1, Section K Appendix 2 Drawing number 5 or 6, and longitudinal door bars complying with K.1.3.5(b) (side sections K Appendix 2 Drawing number 9).

For vehicles not issued with a Vehicle Passport or Competition Car Log Book prior to 1st January 2019 – and of a make and model with a conception date post 31.12.2005 – the following additional members are mandatory:

(a) Roof Reinforcement complying with K.1.3.5 (c) and Section K Appendix 2 drawing number 10 (a), (b), (c) or (d).

(b) Windscreen Pillar Reinforcement complying with K.1.3.5 (e) on each side if Section K Appendix 2 drawing number 63 dimension "A" is greater than 200mm.

48.10.2. Be equipped with an internal switch that is capable of isolating all electrical circuits and completely stopping the engine. The operating switch must be positioned so that it can be operated by the driver and the co-driver when normally seated with seat belts fastened.

48.10.3. Be equipped with an external circuit breaker complying with K.8.

48.10.4. Have currently FIA Homologated seat belts complying with K.2.1.2, K.2.1.3 or K.2.1.4 (four, five or six point).

48.10.5. Be equipped with fire extinguishers complying with K.3.1, K3.2 and K3.3. The driver and co-driver must each be able to activate the extinguisher when normally seated with seat belts fastened.

48.10.6. Be fitted with front seats that were FIA homologated to FIA Standard 8855-1999, 8862-2009 or 8855-2001 at the time of manufacture (but excluding seats for which the FIA homologation was withdrawn) complying with K.2.2.

For national events, FIA homologated seats manufactured to FIA Standard 8855-1999 or 8855-2001 may be used for up to two years beyond the expiration of the original homologation label validity.

FIA homologated seats manufactured to FIA Standard 8862-2009 may be used until 31st December of the year stated on the label.

48.10.7. Have substantial underbody protection covering any area of a fuel tank exposed to running damage.

48.10.8. Be equipped with high-intensity horns that can be operated by the driver and the co-driver.

48.10.9. Competing cars must carry an Emergency Red Warning Triangle (ECE 27) and an SOS/OK Board (25.4).

48.10.10. If a camera is carried, the fitting must be specifically approved by a Scrutineer.

48.10.11. Belt cutter(s) must be carried on board at all times. Both driver and co-driver must be able to reach a belt cutter when seated with their harness fastened.

Historic Special Stage Rallies

49. Motorsport UK has created the Regulations in 49 so that Historic Cars may be used for competitions under a set of rules that seek to preserve the specification of their period and prevent modifications of performance and behaviour which could arise through the application of modern technology. Historic competition is not simply another formula in which to acquire trophies, it is a discipline apart, in which one of the essential ingredients is a devotion to the cars and to their history.

Historic Motor Sport enables the active celebration of the History of the Motor Car.

Historic Special Stage Rally vehicles must comply with Special Stage Rally Technical regulations with the following exceptions 46.2, 46.3, 48.2, 48.2.6, 48.3, 48.4, 48.5, 48.6, 48.9, 48.10.1.

And the regulations below.

Cars Eligible

49.1. *Historic Stage Rally Cars are categorised in the following periods. A car will be dated by the specification presented and not necessarily by the date of build or registration:*

49.1.1. *Historic Category 1 Rally Cars:* Cars of a specification valid before 1 January 1968.

49.1.2. *Historic Category 2 Rally Cars:* Cars of a specification valid between 1 January1968 and 31 December 1974.

49.1.3. *Historic Category 3 Rally Cars:* Cars homologated in Groups 1, 2, 3 or 4 between 1 January 1975 and 31 December 1981. Cars in Category 3 must comply with their Homologation.

49.1.4. *Historic Category 4a Rally Cars:* Cars homologated in Groups A, N and B between 1 January 1982 and 31 December 1985 excluding any cars that were regulated out by the FIA in period from rallies for safety reasons. Cars in Category 4 must comply with their Homologation forms and Appendix J of the 1985 FIA Yellow Book.

Cars homologated in Group B with an effective engine capacity exceeding 1600cc must have been issued with a valid FIA Historic Technical Passport (HTP), be in compliance with this document and the current FIA Appendix K at all times.

49.1.5. *Historic Category 4b Rally Cars:* Cars homologated in Groups A, N and B between 1 January 1986 and 31 December 1990 excluding any cars that were regulated out by the FIA in period from rallies for safety reasons. Cars in Category 4b must comply with their Homologation forms and Appendix J of the 1990 FIA Yellow Book and must have been issued with a valid FIA Historic Technical Passport (HTP), be in compliance with this document and the current FIA Appendix K at all times.

49.2. FIA Appendix K to the International Sporting Code: Historic Rally Cars fully compliant with the current FIA Appendix K. Cars must have been issued with a valid FIA. Historic Technical Passport (HTP), be in compliance with this document and the current FIA Appendix K at all times. Vehicles are exempt from 46.1.3.

Historic Categories 1, 2, 3 and 4

49.5. A validated Historic Rally Vehicle Identity Form (HRVIF) must be obtained from Motorsport UK and presented at scrutineering. This will be the definitive document for the technical specification of the vehicle for which it has been issued.

The HRVIF will remain valid for a period of 10 years from the date of issue or such time as the registered owner of the vehicle changes.

49.5.1. Cars in any of the categories registered after the appropriate date may be Permitted, providing that documentary evidence is submitted to Motorsport UK with the identity form to show that the specific car (not model) was manufactured within the specified period. This evidence will include any technical documentation supplied by the manufacturer, documents relative to the vehicle, information available concerning chassis and engine numbers and any other details from reliable and authenticated sources as may be available. On receipt of satisfactory evidence Motorsport UK will issue an Historic Rally Vehicle Identity Form which must be presented at scrutineering with the registration document.

49.5.2. Category 3 and Category 4 vehicles must also present their Homologation forms.

49.5.3. Upon issue of the validated HRVIF the applicant will be issued with two individually numbered Motorsport UK Registered Historic Rally Vehicle stickers (appendix 1: Drawing Number 49.5). These stickers must be affixed to the car one per side located on the rear section of the front wing.

A Motorsport UK licenced Eligibility Scrutineer may remove the MSA/Motorsport UK stickers if the vehicle is found not to comply with R49-49.11.4.

Permitted Modifications

49.6. Only period modifications used in rallying on the particular make and model of car are permitted for Historic Category 1, 2, 3 and 4 Rally Cars.

49.6.1. They should be detailed on the Historic Rally Vehicle Identity Form and duly ratified by Motorsport UK.

49.6.2. Modifications are only allowed if they were available before:

1 January 1968 for Historic Category 1 Rally Cars.

1 January 1975 for Historic Category 2 Rally Cars.

1 January 1982 for Historic Category 3 Rally Cars.

1 January 1986 for Historic Category 4a Rally Cars.

1 January 1991 for Historic Category 4b Rally Cars.

49.6.3. In all cases the onus of proving a modification as being period rests with the Competitor who must submit the required documentary evidence.

49.6.4. Exceptionally, Motorsport UK may grant a dispensation to use non-original parts, parts from a different model, or parts from a later period, provided that the use of these parts does nor confer an advantage in either performance or reliability. Motorsport UK will give consideration to written requests from Competitors who are unable to source vital components.

49.6.5. Competitors will be notified by means of an Official Bulletin of any part subject to dispensation and a full list of dispensations will be published annually.

Recommended Classes

49.7.1. *Historic Category 1 Rally Cars. Pre- 1.1.60.*

Class A1 up to 1200cc

Class A2 1201cc up to 1500cc

Class A3 Over 1501cc

From 1.1.60 - 31.12.67

Class B1 Up to 1000cc

Class B2 1001cc up to 1300cc

Class B3 1301cc up to 1600cc

Class B4 1601cc up to 2000cc

Class B5 2001cc up to 2500cc

Class B6 Over 2501cc

49.7.2. *Historic Category 2 Rally Cars. 1.1.68 - 31.12.74.*

Class C1 Up to 1300cc

Class C2 1301cc to 1600cc

Class C3 1601cc to 2000cc

Class C4 Over 2001cc

Class C5 All cars having engines with both more than one camshaft and more than two valves per cylinder.

All cars with a Rotary Engine.

49.7.3. *Historic Category 3 Rally Cars. 1.1.75 - 31.12.81.*

Class D1 Up to 1300cc

Class D2 1301cc to 1600cc

Class D3 1601cc to 2000cc

Class D4 Over 2001cc

Class D5 All cars having engines with both more than one camshaft and more than two valves per cylinder.

All cars with a Rotary Engine.

49.7.4. *Historic Rally Cars complying with FIA Appendix K.*

Classes as specified by Article 2.1 of the FIA European Historic Sporting Rally Championship Regulations.

49.7.5. *Historic Category 4a Rally Cars. 1.1.82 - 31.12.85.*

Class E1 Up to 1300cc

Class E2 1301cc to 1600cc

Class E3 1601cc to 2000cc

Class E4 Over 2001cc

49.7.6. *Historic Category 4b Rally Cars. 1.1.86 - 31.12.90.*

Class F1 Up to 1300cc

Class F2 1301cc to 1600cc

Class F3 1601cc to 2000cc

Class F4 Over 2001cc

Engine

49.8.1. Cylinder bores may be 60 thousandths of an inch oversize without affecting class eligibility.

49.8.2. Four wheel drive vehicles fitted with forced induction are prohibited in Historic Categories 1, 2 and 3.

49.8.3. Forced induction is only permitted if by means of a mechanically driven super-charger, or by an exhaust driven turbocharger if fitted as original equipment by the vehicle manufacturer (48.2.1(a)). Such cars in Category 1, 2 and 3 will be classified as having an engine capacity increase of one third. Cars in Category 4a will be classified as having an engine capacity increase of 70% and must be fitted with a 34mm restrictor at a maximum of 50mm from the extremes of the compressor blades.

49.8.4. Engines must comply with silencing levels J.5.17. Exceptionally and with the permission of the Chief Scrutineer, those cars for which 5000rpm is inappropriate may be tested at 3/4 of maximum rpm.

49.8.5. Cars in Category 4 equipped with rotary engines will be subject to an equivalency factor of 2:1.

Safety

49.9.1. Deleted.

49.9.2. Vehicles must be equipped with a safety rollover bar in accordance with K1 to K1.4.3 inclusive, K1.6.1 and Section K, Appendix 2, Drawing 37 a) or b). Dotted lines signify optional features.

49.9.3. Door bars may be of single tube, crossed tube or twin tube design [Section (K) Appendix 2 drgs. 12 (g) or (h)]. A single Diagonal Member is mandatory, a second Diagonal Member may be added to form crossed diagonals. Diagonals may be either installed across the Main Rollbar or between the Backstays.

49.9.4. Additional tubes for the mounting of harness shoulder straps are permitted.

49.9.5. All bars must remain within the confines of the Passenger compartment and must not be used as suspension pick-up point bracing unless the Competitor can prove that this was done in period to the specific model.

49.9.6. Cars in Category 4 must comply with R48.10.1.

49.9.7. Belt cutter(s) must be carried on board at all times. Both driver and co-driver must be able to reach a belt cutter when seated with their harness fastened.

Wheels, Tyres and Brakes

49.10.1. Wheels and tyres must be fitted in compliance with L3, 49.6 except as follows, 48.5.1, 48.5.2, 48.5.4, 48.5.6-8 and 48.5.10-14 and;

49.10.2. For Categories One, Two and Three the diameter of wheel may not differ from that originally fitted by more than 10%.

49.10.3. For Categories One, Two and Three the complete wheels (flange + rim + tyre) are free providing that they are housed within the permitted bodywork and that they do not exceed the following widths in relation to the cubic capacity of the car:

Up to 1150 cc: 7in

Over 1150cc and up to 1600 cc: 8in

Over 1600 cc: 9in.

49.10.4. For Category Four, and vehicles competing under 49.2, wheels and tyres must comply fully with FIA Appendix K Regulations for Cars in Rallies.

49.10.5. The fitting of a dual master cylinder or any other type of device providing a simultaneous action on all four wheels and divided action on two wheels is permitted, provided the original brake pedal and pivot point are used and they cannot be adjusted to affect brake balance by either the Driver or the Co-Driver when normally seated in the car.

Miscellaneous

49.11.1. The use of gas discharge technology in any forward facing lights, either main beam or auxiliary, or in any reversing light is not permitted.

49.11.2. Unless of the specification used in period for the particular make and model of car, the use of light pods to individually mount or to mount auxiliary lights as one unit is not permitted.

49.11.3. Roof vents may only be fitted if of the same specification as those fitted to the particular make and model of the car in period.

49.11.4. Any underbody protection must be of period specification. Additionally a guard moulded closely to the vehicle floor pan, fixed by bolting and/or adhesive may be fitted. It must not extend beyond the front and rear axle centre lines and the outer 100mm on each side must not cover the vertical section of the outer sills.

Appendix 1: Charts and Drawings

Chart 3(a)

CODE	PR REQUIREMENTS
A	Personal visit to an adult member of household within 100m.
B	Letter to each householder within 100m.
C	Public notice.
D	Personally visit and obtain signature from an adult member of any household within 500m of any point where competitors are required to stop (i.e. any control or clue point).
E	Consult RLO.
F	Personal visit to an adult member of household within 150m.
G	If timed to the second, not pass through any area which has in excess of 20 occupied dwellings within 300m radius of the route, unless written agreement is given by all of the householders within that area and the Motorsport UK has given its permission.
H	Letter to each householder within 100m, unless the RLO agrees to a lesser requirement.

Drawing number R18.6.3

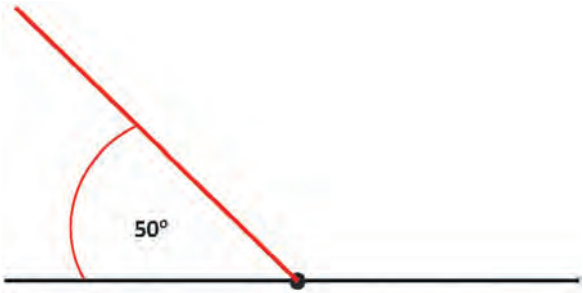

Chart 3(b)

PR REQUIREMENTS
ALL EVENTS TRAVERSING THE PUBLIC HIGHWAY

Permit	Section	Road Type	Time	PR Requirement	
ROAD RALLY (inc. HISTORIC)	STANDARD (timed to second) inc. STANDARD (time to minute)	All Classes (see 10.2)	23.59 to 1 hour after sunrise	A(G)	D
		All Classes	24 hour	B	D
	REGULARITY	A & B Habitation	22.00 to 07.00	C	D
		Yellow/White UCR/Private	24 hour	H	D
		A & B Habitation	07.00 to 22.00	E	D
	TRANSPORT & NEUTRAL	White/UCR/ Private	24 hour	B	D
		Yellow	22.00 to 07.00	E	D
		Habitation A, B & (Yellow 07.00 to 22.00)	24 hour	C	D
ECONOMY, NAVIGATIONAL & 12 CAR RALLIES (All types) VINTAGE (22.00 to 07.00)	STANDARD & REGULARITY	A & B Habitation	22.00 to 07.00	C	D
		A & B Habitation	07.00 to 22.00	E	D
		Yellow/White UCR/Private	24 hour	H	D
	TRANSPORT & NEUTRAL	White/UCR Private	24 hour	B	D
		Yellow	22.00 to 08.00	E	D
		A, B, Habitation & (Yellow 07.00 to 22.00)	24 hour	E	D
VINTAGE (07.00 to 22.00)	ALL	ALL	07.00 to 22.00	C	D
VETERAN	ALL	ALL	24 hour	C	D
NAV. SCATTERS	ALL	ALL	24 hour	E	D
TREASURE HUNTS TOURING ASSMS.	ALL	ALL	24 hour	E	D
SPECIAL STAGE RALLIES including SINGLE VENUE STAGE RALLIES	ROAD	A & B, Habitation	22.00 to 07.00	C	D
		Yellow	22.00 to 07.00	B	D
		White/UCR/ Private	24 hour	B	D
		A, B, Yellow Habitation	07.00 to 22.00	E	D
	ACCESS/EGRESS To/From STAGE To PUBLIC HIGHWAY	ALL	24 hour	F	E
	SPECIAL STAGE	Private or Roads Closed by appropriate Legislation	24 hour	F	
CLASSIC TRIALS and ALL OTHER EVENTS USING THE PUBLIC HIGHWAY		White/UCR/ Private	24 hour	B	D
		Yellow	22.00 to 07.00	B	D
		A, B, Habitation & (Yellow 07.00 to 22.00)	24 hour	C	D

For Codes see table on previous page

Chart 13 – Penalties

SUMMARY OF PENALTIES TO BE APPLIED ON SCHEDULED TIMED EVENTS

- Performance will be assessed in one of the methods listed, either by time penalty or by the 'fails' system. The SRs must specify which system is to be used.
- *These penalties may be increased by the SRs; they may not be reduced.
- **The penalty may be increased if stated in the SRs.
- The items in *italics* may not be varied by the rally organisers.

		Time	Fails
(a)	*Not reporting or reporting OTL at a Main Time Control*	*Retired*	
*(b)	Not reporting or reporting OTL at any other Time Control	30 minutes	1 Fail
*(c)	Not complying with the route card including visiting a control more than once	15 minutes	1 Fail
*(d)	Not reporting at Passage Control or providing proof of visiting a Route Check	5 minutes	1 Fail
*(e)	Arrival before scheduled time at the end of a Standard Section	2 minutes per minute	
*(f)	Arrival after due time at the end of a Standard Section	1 minute per minute	
*(g)	Arrival before due time at the end of a Neutral Section	30 minutes	1 Fail
**(h)	Arrival before due time at an intermediate control or finish control of a Regularity Section	Actual time early	
*(j)	Arrival after due time at an intermediate control or finish control of a Regularity Section. Exceptionally at a single intermediate or finish control control of a Regularity Section held between 07.00 and 22.00hrs this penalty may be reduced.	Actual time late	
*(k)	Breach of any statutory requirement concerning the use of a motor vehicle	30 minutes	1 Fail
(l)	Contravention of 12.7 *First Offence	30 minutes	1 Fail
	Second Offence	*Disqualified*	
(m)	*Excessive speed or driving likely to bring motor sport into disrepute*	*Disqualified*	
(n)	*Excessive sound*	*Disqualified*	
(o)	*Receiving assistance contrary to 7.2.4*	*Disqualified*	
(p)	*Breach of 7.2.3, 18.6.4*	*Disqualified*	
(q)	*Breach of 5.4, 15.1.2, 15.1.4, 9.1.3, 9.1.4, 9.1.5, 9.1.6*	*Disqualified*	

Penalties left to the discretion of the Clerk of the Course which may go as far as disqualification (G.5.3).

(r) Failure to follow the instructions of an official.

(s) Further breaches of (k).

(t) Breaches of Regulations detailed in Section C.

Drawing number 18.5

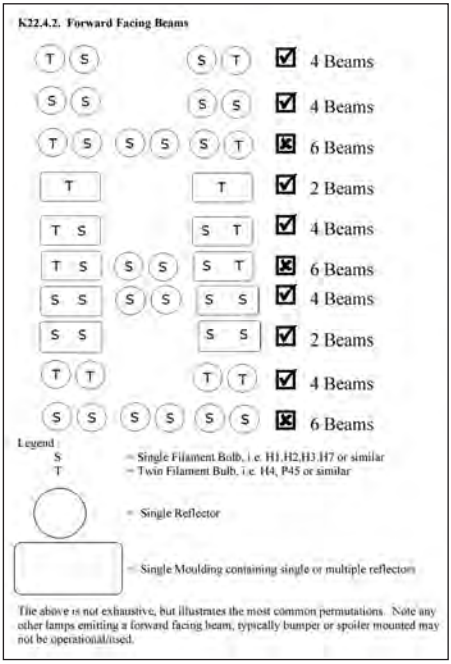

Drawing number 49.5

Drawing number 29.1.1

CHICANE ENTRANCE BOARD

Examples of a typical chicane layout:

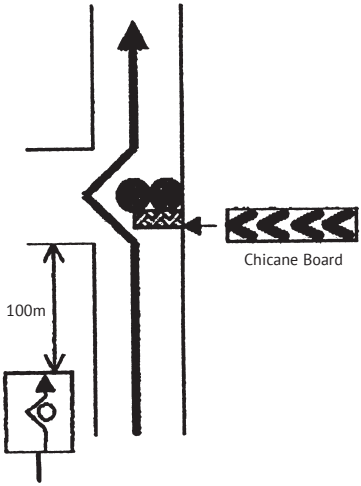

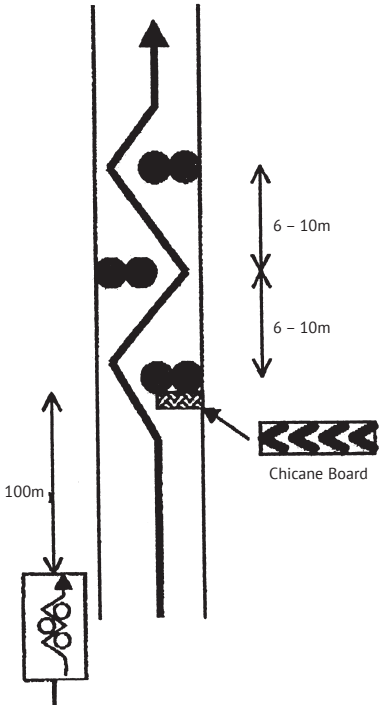

Drawing number 29.1.1

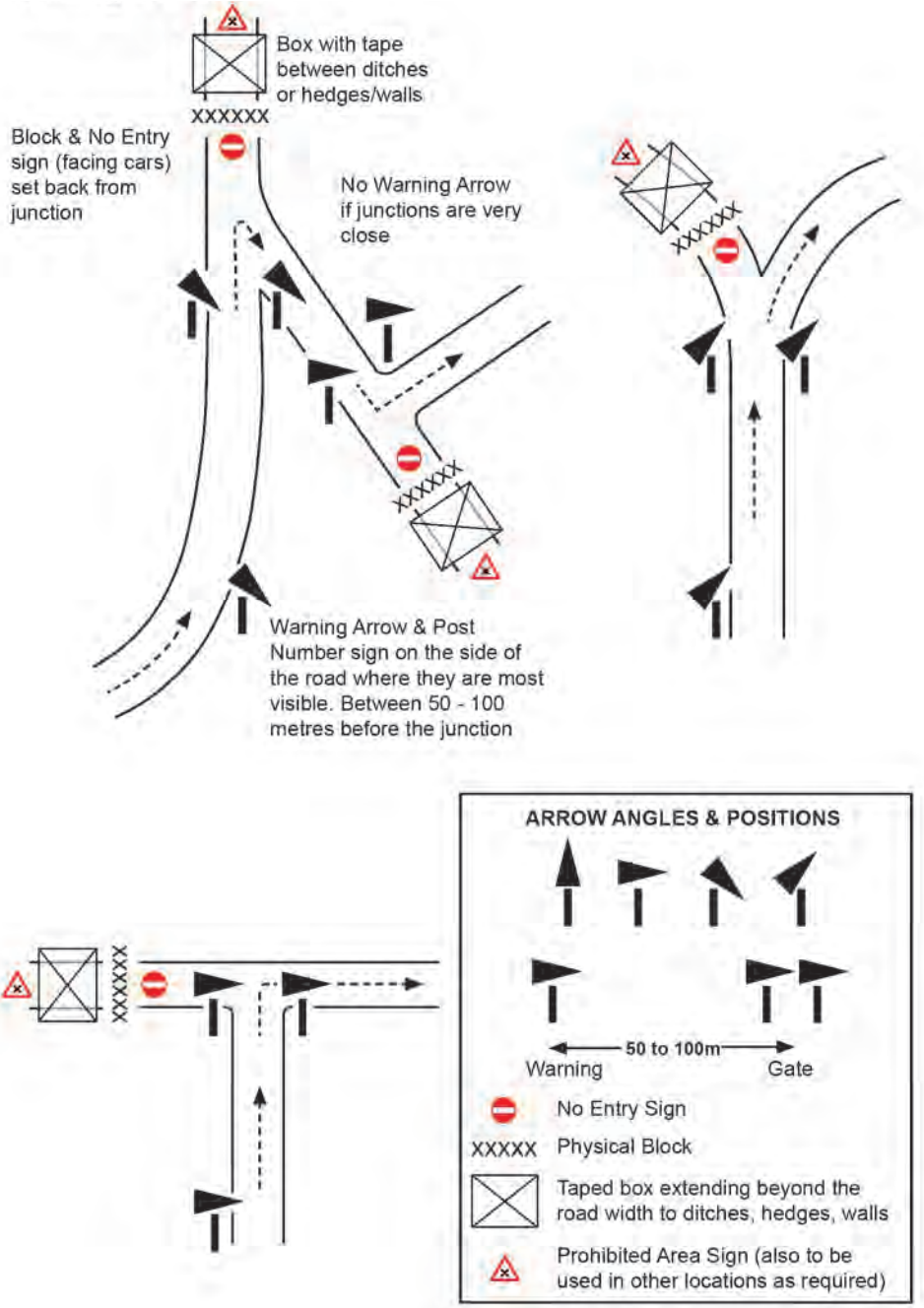

Alternative to Drawing number 29 without the use of box junctions

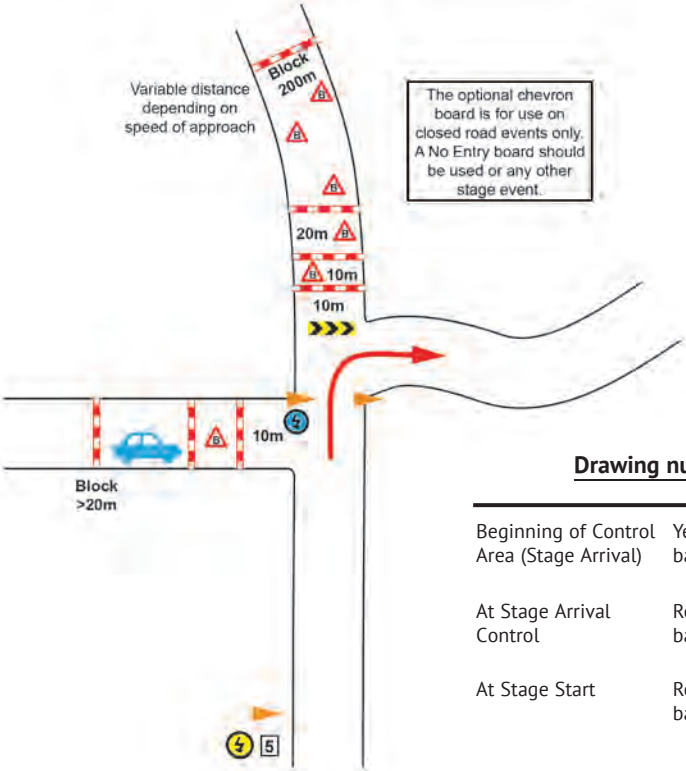

Drawing number 29.4.1

Beginning of Control Area (Stage Arrival)	Yellow background	
At Stage Arrival Control	Red background	
At Stage Start	Red background	
Warning of Stage Finish (Both sides of track 100m prior to Flying Finish Line)	Yellow background	
At Flying Finish Line (Both sides of track)	Red background	
Countdown Boards (Evenly spaced between flying finish and stop line)		
At the Stop Line	Red background	

Drawing number 29.5

Approximately 100m before Radio Point	Yellow background	
At Radio Point	Blue background	

Chart 32.2 – Penalties

SUMMARY OF PENALTIES TO BE APPLIED ON TARGET TIMED EVENTS

- Competitors will start with zero penalties.
- *The Supplementary Regulations must state positively whether the penalty for lateness is to be applied. If not stated any such lateness will be penalty-free.
- Performance will be assessed as follows:-

(a)	(i) Not reporting or reporting OTL at a Control; Multi-Venue Stage Rallies Or Not completing or missing a stage	Retired 15 Minutes plus stage maximum per stage
	(ii) Single Venue Stage Rallies (inc Rally Timed Trials)	30 minutes per stage or MTC/TC
(b)	Not complying with a requirement of the Road Book	10 minutes
(c)	Not performing a stage correctly	Stage maximum
(d)	Not attempting or being ready to attempt a stage when instructed to do so	10 minutes
(e)	Making a false start at a special stage	1 minute
(f)	(i) Every second taken to complete a special stage where timing is to the preceding whole second	1 second
(f)	(ii) Every second and 10th of a second taken to complete a special stage where timing is to the preceding whole 10th of a second	1 second and 10th of a second
(g)	For each minute under target time on a road section or in a service area	1 minute
*(h)	Only if specifically mentioned in the SRs, for each minute over target time on a road section or for each minute over target time in a service area	10 seconds
(j)	For each minute before or after due time at Main Time Control (out)	10 seconds
(k)	Breach of any statutory requirement concerning the use of a motor vehicle	10 minutes
(l)	Excessive speed or driving likely to bring motor sport into disrepute	10 minutes
(m)	Excessive sound	10 minutes
(n)	Receiving assistance contrary to 38	Disqualification & reported to Motorsport UK
(o)	Breach of 38.1.2 to 38.1.4	10 minutes
(p)	Breach of Regulations: 5.4, 40.1.3, 25.1, 25.1.1, 25.3, 25.5, 25.6	Disqualification
(q)	Unauthorised use or possession of Pace Notes (25.9) or unauthorised presence on a stage (5.1.4)	Disqualification & reported to Motorsport UK
(r)	Failure to comply with 25.4	Disqualification & reported to Motorsport UK
(s)	Breach of Regulations: 24.4.5 or 25.6.3	Disqualification
(t)	Breach of Regulation: 38.1.7	Disqualification & reported to Motorsport UK

Penalties left to the discretion of the Clerk of the Course which may go as far as disqualification (G.5.3).

(aa) Failure to follow the instructions of an official.
(bb) Further breaches of (b), (c), (d), (e), (k), (l), (m) or (n).
(cc) Repeated misbehaviour of service crew.
(dd) Reporting late for Scrutineering.
(ee) Misuse of SOS and/or OK boards.
(ff) Unauthorised testing or practicing (26.7).
(gg) Causing an obstruction (24.6).
(hh) Breaches of Regulations detailed in Section C.
(ii) Failure to comply with control check-in procedures.

Chart 32.13 – Penalties

SUMMARY OF PENALTIES TO BE APPLIED ON SCHEDULED TIMED SPECIAL STAGE RALLIES

- Performance will be assessed by one of the methods listed, either by time penalty or by the 'fails' system. The SRs must specify which system is to be used.
- *These penalties may be increased by the SRs; they may not be reduced.
- **The penalty may be increased if stated in the SRs.

The items in italics may not be varied by the rally organisers.

		Time	Fails
(a)	*Not reporting or reporting OTL at a Main Time Control*	*Retired*	
*(b)	Not reporting or reporting OTL at any other Time Control	30 minutes	1 Fail
*(c)	Not complying with a requirement of the Road Book	10 minutes	1 Fail
(d)	Not performing a stage correctly	Stage Maximum	
(e)	Not attempting or being ready to attempt a stage when instructed to do so	10 minutes	
(f)	Making a false start at a special stage	1 minute	
(g)	(i) Every second taken to complete a special stage where timing is to the preceding whole second	1 second and	
(g)	(ii) Every second and 10th of a second taken to complete a special stage where timing is to the preceding whole 10th of a second	1 second and 10th of a second	
(h)	For each minute before due time on a road section or in a service area	1 minute	
*(i)	Only if specifically mentioned in the SRs, for each minute after due time on a road section or for each minute over due time in a service area	10 seconds	
(j)	For each minute before or after due time at Main Time Control (out)	10 seconds	
(k)	Breach of any statutory requirement concerning the use of a motor vehicle	10 minutes	1 Fail
(l)	Contravention of 32.5 *First Offence	30 minutes	1 Fail
	Second Offence	*Disqualification*	
(m)	Excessive speed or driving likely to bring motor sport into disrepute	10 minutes	1 Fail
(n)	Excessive sound	10 minutes	1 Fail
(o)	Receiving assistance contrary to 38	Disqualification and reported to Motorsport UK	
(p)	Breach of 38.1.2 to 38.1.4	10 minutes	
(q)	Breach of Regulations: 5.4, 40.1.3, 25.1, 25.1.1, 25.3, 25.5, 25.6	Disqualification	
(r)	Unauthorised use or possession of Pace Notes (25.9) or unauthorised presence on a stage (5.1.4)	Disqualification and reported to Motorsport UK	
(s)	Failure to comply with 25.4	Disqualification and reported to Motorsport UK	
(t)	Breach of Regulations: 24.4.5 or 25.6.3.	Disqualification	
(u)	Breach of Regulation: 38.1.7	Disqualification & reported	

Penalties left to the discretion of the Clerk of the Course which may go as far as disqualification (G.5.3).

(aa) Failure to follow the instructions of an official.
(bb) Further breaches of (b), (c), (d), (e), (l), (m), (n) or (o).
(cc) Repeated misbehaviour of service crew.
(dd) Reporting late for Scrutineering.
(ee) Misuse of SOS and/or OK boards.
(ff) Unauthorised testing or practicing (26.7).
(gg) Causing an obstruction (24.6).
(hh) Breaches of Regulations detailed in Section C.
(ii) Failure to comply with control check-in procedures.

Specific Regs for Sprints, Hill Climbs and Drag Racing (S)

(S) Sprints, Hill Climbs and Drag Racing

Organisers' Regulations

Organisers of any Sprint, Hill Climb, Drag Race or Hot Lap Challenge Meeting must comply with the Common Regulations for Organisers (Section D) and the following:

General

1.1. Permits for Sprints, Hill Climbs, Drag Race or Hot Lap Challenge are issued at the sole discretion of Motorsport UK, and are dependent upon a valid track licence being in existence.

1.1.1. For Hot Lap Challenge a valid track licence for Racing Circuits is required.

1.1.2. A club will only be allowed to organise events up to National status, unless Motorsport UK has specifically approved an application for higher status.

1.1.3. Motorsport UK licensed Clerks of the Course Timekeepers and Scrutineers, appropriate to the grade of the event, must be appointed.

The Clerk of the Course

1.2. In the case of all Sprints, Hill Climbs or Hot Lap Challenge, the Clerk of the Course must hold a CofC licence issued by Motorsport UK valid for the grade of meeting.

1.2.1. For Criteria see Section G.

1.2.2. At all National and above events, there should be at least one licensed Deputy/Assistant Clerks of the Course, in addition to the Clerk of the Course.

1.2.3. At all other events it is recommended that there be at least one Deputy/Assistant Clerk of the Course in addition to the Clerk of the Course. Any Deputy Clerks must be licensed but Assistant Clerks need not necessarily be so.

Practice/Competition Restrictions

***2.1. Practice**. *With the exception of Drag Races and Hot Lap Challenge, all Competitors must receive the following opportunities for practice:

2.1.1. Before the competitive runs at least one practice run.

Drivers are also Permitted to either:

(a) Walk the course, or

(b) Drive over it at a non-competitive speed.

Supplementary Regulations (SRs) must state which option is to be adopted.

2.1.2. Deleted.

2.1.3. Deleted.

2.1.4. Any Driver who has not previously competed at the course within the preceding six months, must make at least one practice run in the car to be competed in. The Stewards of the Meeting may waive this requirement where a Driver can give satisfactory evidence of familiarity with, the course, and the car in which he is entered to compete but has not practised.

2.2. Where practice times are not required for the purpose of arranging the order of competing, such times will be unofficial. Failure to record a time in such a case, for whatever reason, will not automatically qualify the competitor concerned to a re-run, but this may be authorised by the Clerk of the Course.

Starting

***3.1.** The SRs will specify:

(a) The starting signal.

(b) The method of timing.

(c) When timing commences.

3.2. With the exception of Hot Lap Challenge, cars shall be started from a standing start with the engine running. No car shall be started whilst there is an obstruction in its path either on the course or in the braking area after the finish, unless the track licence allows more than one car to be on the course at the same time.

3.2.1. Vehicles starting singly or in line abreast shall be placed as follows:

(a) When start timing is activated by a light beam, the vehicle must be stationary with the part which operates the timing apparatus 10cm behind the starting line.

(b) If the timing is not recorded automatically, with that part of the front tyres which is in contact with the ground resting upon the starting line.

***3.3.** The finishing line will be clearly indicated.

Flag Signals

4. Flag signals will normally be restricted to a Red flag at each post. Marshals should be briefed as to halting a competitor in the event of an incident in accordance with 9.3.7.

4.1. At Sprints at race circuits other flag signals as specified in Q.12.24 may be used provided their use is clearly defined in the SRs.

Medical and Rescue Requirements

5.1. Ambulance and Staff. The Organisers in conjunction with the Chief Medical Officer will ensure that during practice sessions and competition the following are in attendance:

5.1.1. Adequate first-aid staff (e.g. members of St. John Ambulance Association, British Red Cross Society or St. Andrew Ambulance Association).

5.1.2. Ambulances should be equipped with basic resuscitation equipment and, if possible, a Casualty Immobiliser for handling a patient over difficult terrain. These ambulances to be reserved for use in connection with casualties arising from the competition.

5.1.3. It is important that the ambulance be so equipped that essential equipment does not have to be taken from any other Emergency Vehicle.

Note: Throughout these sections an asterisk(*) indicates a requirement for additional information to be printed in the Supplementary Regulations (SRs). Text shown in Italics indicate a Regulation which may be amended in the SRs. Text shown in red indicates a new or amended regulation for 2022.

5.2. The minimum medical and rescue requirements (including practice) are:

5.2.1. Hill Climb and Sprint events: One Doctor (or one Motorsport UK-Registered Paramedic (F.7.3 to 7.5) and one Rescue Unit (F.2)). Subject to the presence of a correctly crewed and equipped Motorsport UK registered Rescue Unit, the attendance of an ambulance is recommended but not mandatory. This is subject to the requirement that if a casualty is within the Rescue Unit the event may not run until the casualty has been released for further care.

5.2.2. Drag Races: One Doctor (or one Motorsport UK-Registered Paramedic (F.7.3 to 7.5)) and one ambulance.

5.2.3. The Rescue Unit and the Ambulance must be positioned to ensure unobstructed access to the course as per the track licence.

5.2.4. Hot Lap Challenge: In accordance with Q10.

5.3. In an emergency, the Chief Medical Officer may, at his discretion, designate as an ambulance any vehicle he deems adequate for this purpose.

5.4. When public attendance is expected suitable arrangements must be made by the Organisers for dealing with the first-aid requirements of spectators not arising from the event.

Timekeepers

6. Whenever possible, there shall be at least two timekeepers at all speed events (G.6.1.7, G.6.5).

Competitors' Regulations

General

7.1.1. Competitors in all Sprints, Hill Climbs, Drag Race or Hot Lap Challenge must comply with the Common Regulations for Competitors (Section H) and the following:

7.1.2. *Cars must be presented for scrutiny and practice at the times specified in the SRs.

7.1.3. Cars competing in Hill Climbs and Sprints must comply with Technical Regulations 10-15 and Section J.

7.1.4. When signing on, a valid Competition/Entrant Licence for Entrant and Driver must be produced.

7.1.5. Deleted.

7.1.5.1. Any Driver competing in a Racing or Sports Libre car of more than 1100cc, or equivalent forced induction, with the exception of a pre'1994 Formula Ford 1600 in compliance with the period Ford regulations, must hold a RS National (H.17.1) or Race National Licence, unless the car is currently licensed for use on the public highway and competes in the event in a road-legal condition.

7.1.6. Competitors must declare on their entry forms whether or not they have ever held a valid RTA licence. Competitors who have never held a valid RTA licence and who do not have any qualifying signatures towards upgrading their Competition Licence on their Upgrade Card may be specifically observed at the event.

(a) Any competitor whose vehicle is not self starting, at any part of the course, must declare on their entry form the method of operation together with a detailed starting instruction.

7.1.7. For Drag Race competitors under the age of 18 years a PG Entrant licence is required, H26.1.9. applies.

7.1.8. Competitors in Hot Lap Challenge must comply with the minimum licence criteria stipulated in 17.2.4.1..

7.1.9. Junior Sprint and Junior Hill Climb Competitors aged 14 to 16 may compete, at Interclub status, in a Standard Car of no more than 1400cc and in compliance with 11. until the end of the year of their 16th birthday.

7.1.9.1. Junior Sprint. New Competitors will be required to drive observed laps prior to the Competition in order to satisfy the Clerk of the Course that they are competent to take part, subject to the following:

(a) Start singly and run over the duration of the course at least 3 times.

(b) (b) A Motorsport UK licensed driver may accompany the new Competitor, subject to approval of the Clerk of the Course.

(c) Observed laps are not required if the Competitor can provide the Clerk of the Course with proof of having competed as a Driver in three other Motorsport UK Permitted events.

7.1.9.2. Junior Hill Climb. For participation in Junior Hill Climb events the Competitor must have gained signatures for having successfully completed a minimum of three Junior Sprint events.

Competition Licence Retention and Upgrading

8. See Section H.17.1.

Scrutineering

9.1.1. No car may be driven in the event until it has been approved by a Motorsport UK Scrutineer of the Meeting.

9.1.2. If, after approval, any car is dismantled or modified in a manner that may affect its safety or eligibility, or it is involved in any incident which is likely to have a similar effect, or any aerodynamic device is added or removed, it shall be represented for approval.

The entrant shall be responsible for seeking such fresh approval.

9.1.3. Deleted.

9.1.4. Any car involved in an incident which is unable to proceed shall not be touched by any person other than officials without the specific approval of the Clerk of the Course. Furthermore, the driver concerned may not drive again without the approval of the Medical Officer in Charge.

9.1.5. Any car involved in an accident shall not be taken away from the course without the prior authority of the Clerk of the Course.

9.1.6. The SRs for all Hill Climbs and Sprints should specify if timing is being activated by a light beam. In this case competitors must be reminded that a timing strut in accordance with 10.10 is required.

9.1.7. All cars competing in Hill Climbs or Sprints must be presented for scrutineering with a valid Competition Car Log Book/Vehicle Passport or an MSA/Motorsport UK Recognised Vehicle Identity Document unless the car is currently licensed for use on the public highway and is competing in a road legal condition. The onus of proof rests with the competitor. (See 10.11.)

9.1.8. Any alteration or modification made to the vehicle, or any amendment to the original details shown in the Competition Car Log Book/Vehicle Passport, must be in accordance with the prescriptions of J.2.1.

9.1.9. Vehicles other than those used for Drag Races or Hot Lap Challenge may be liable to annual inspection by a Technical Commissioner or designated Scrutineer if:

(a) Fitted with an engine of a greater capacity than that with which it was constructed; and/or

(b) Altered or modified to cause a change in classification.

Drivers

9.2.1. Throughout practice and Competition, upon exiting from and until returning to the Paddock, when the driver is seated in the vehicle he must wear clothing, helmet and goggles complying with K.9 to 11 or, where appropriate the specific Class regulations for Drag Races.

9.2.1.1. Overalls homologated to FIA 8856- 2000, FIA 8856-2018 or FIA 1986 standard are mandatory, with the exception of Standard Cars (11) where flame resistant clothing is recommended (arms and legs must be covered) and Road Cars (12) where overalls must comply with K9.1.4.

9.2.1.2. Competitors are required to wear flame-resistant gloves (K.14.3(e)), with the exception of Standard Cars (11) and Road Cars (12) where their use is recommended.

9.2.1.3. An FIA approved FHR device, fitted in accordance with FIA regulations is mandatory for all drivers with the exception of Period Defined Vehicles, Standard Cars (11) and Road Cars (12.).

9.2.1.4. All these items required by 9.2.1.1-9.2.1.3.must be produced for inspection and approval at scrutineering.

9.2.2. Only the driver may be in a car during the competition or practice.

***9.2.2.1.** During warm-up of a Hot Lap Challenge event the SR's or Championship Regulations may authorise the team data analyst to accompany the driver and he would be required to comply with 9.2.1.

Results

(Not applicable for Drag Races or Hot Lap Challenge)

9.2.3. A driver may drive any number of cars for which an entry has been accepted by the organisers, unless the SRs specify a limit.

9.2.4. The same car may not be entered to compete for the same award more than twice, and then only provided it is driven by different drivers.

Competition Numbers

9.2.5. Cars will be identified by means of a competition number, allocated by the organisers, which must be visible from each side of the vehicle and displayed on a contrasting background in a proper and durable way, acceptable to the Chief Timekeeper of the day.

9.2.6. Competition numbers must be covered or removed at all times whilst driving on the public highway.

Paddock and Track Regulations

9.3.1. The spinning of wheels (tyre warming) will only be permitted in a designated area and which should be clearly defined.

9.3.1.1. With the exception of Drag Racing, the heating of tyres, by any method other than 9.3.1. above, or their treatment by any chemical substance is prohibited. For the avoidance of doubt, no manner of abnormally raising the temperature of the tyres/wheels above the natural ambient temperature is allowed.

9.3.2. Any car unable to complete the course shall be stopped well clear of the course and shall not be moved without prior permission from the Clerk of the Course.

9.3.3. No competing car shall be driven in the reverse direction of the track except under official supervision.

9.3.4. Refuelling and work on the cars, other than by a Driver or Officials, can only be carried out in the paddock unless the Clerk of the Course specifically authorises otherwise.

9.3.5. No more than two people at any time, in addition to the Driver and Officials, are allowed in attendance on each car in the identified starting area.

9.3.6. Except while on the track no competing car shall be driven at a speed exceeding 10 mph without the specific permission of the Clerk of the Course.

9.3.7.

(a) In Hill Climbs If the Red flag (or red light signal) is displayed, competing cars should come to a standstill when practicable, and await further instructions from the marshals (4).

(b) In Sprints if the Red flag (or red light signal) is displayed, competing cars should come to a standstill when practicable and await further instructions from the marshals, but Q.12.24.3(j) may apply if the SRs specify that it is applicable.

Starting and Practising

9.4. Cars will start as specified.

9.4.1. Sprints and Hill Climbs: Singly.

9.4.2. The number of vehicles on a track at any one time is that permitted by the track licence, with the exception of Junior Sprint or Hill Climb Competitors who will be on the track singly at any time.

9.4.3. The starting order will be in classes as determined by the organisers, unless the SRs specify otherwise.

9.4.4. Deleted.

9.4.5. In Hill Climbs or Sprints on sealed surfaces, should a competitor make an unsatisfactory start, and provided that neither of the rear wheel centres have crossed the Start Line, he may be permitted a Re-Start.

9.4.6. Drivers will be under Starter's Orders when instructed by an Official to proceed to the Start Line. If a Competitor takes undue time to comply, the Clerk of the Course, or his Deputy, may specify that he comes forward within two minutes or he will forfeit his run.

9.4.7. After crossing the finishing line, competitors must slow down as appropriate and proceed as instructed.

Results

(Not applicable for Drag Races)

9.5.1. Drivers must be allowed a minimum of two runs in the same car in each Class entered, the faster run to count for the results unless the SRs say otherwise.

9.5.2. As between two competitors the more meritorious performance will be that of the competitor who has covered the course in a lesser time.

9.5.3. A competitor's time will be credited only if:

(a) All four wheels of the car are on the track when it crosses the finish line.

(b) The run is made during the period provided for cars in the appropriate class and not more than the appropriate number of competition runs have been made.

(c) The vehicle completes the correct course without outside assistance.

9.5.4. If the boundaries of the track are indicated by temporary markers, the SRs shall specify if any and what penalties apply for striking a marker or crossing a given line.

9.5.5. To be classified as a finisher in the competition a competitor must have completed at least one competition run.

9.5.6. Only an equal number of runs for all competitors in the same class will be counted. In the event of a tie between two or more competitors, the results of the next fastest run recorded (during competition runs) by the competitors concerned shall be compared, and so on.

9.5.7. If through his own error a driver fails to record a time he shall not be entitled to a re-run.

9.5.8. In other circumstances (e.g. baulking) a re-run may be granted by the Clerk of the Course who may order any penalties incurred in the initial run are applied to the re-run.

Judges may be appointed to adjudicate on:

(a) Unsatisfactory or False Starts.

(b) Not following correct course, or touching marker.

(c) Baulking.

(d) Noise.

Technical Regulations

Categories

10.1. Categories are defined in the following regulations (11 to 15) (except for Period Defined Vehicles (Non-Rally) A-E inclusive, which remain free). Classes within those categories are free but must be stated in the SR's.

Other than the provisions of Section J, 10.2 below, and the specific Category regulations below, as appropriate, modifications are free.

10.1.1. Motorsport UK retains the sole discretion to determine the category into which a vehicle should be categorised, should there be any doubt.

10.1.2. The onus of responsibility for the eligibility of competing vehicles lies with the competitor.

10.1.3. Standard Cars – Cars complying with 11.

10.1.4. Road- Cars – Cars complying with 12.

10.1.5. Modified Cars –Cars complying with 13.

10.1.6. Deleted.

10.1.7. Deleted.

10.1.8. Sports Libre Cars – Cars complying with 14.

10.1.9. Racing Cars – Cars complying with 15.

In addition to complying with Section J all vehicles competing in Sprints, Hill Climbs must:

Sprint and Hill Climb Vehicles

10.2. All Sprint & Hill Climb vehicles must comply with the following, as a minimum:

Safety

10.2.1. Be fitted with a Roll Over Protection System complying with Motorsport UK requirements as specified in Section K, except for cars of Periods A – E (Nomenclature and Definitions) , Standard Cars (11.1) and Road Cars Series Production (12.) where it is recommended. If fitted with lightened non-standard doors be fitted with a doorbar(s) complying with K1.3.5(b) on the driver's side as a minimum.

10.2.2. Deleted.

10.2.3. Deleted.

10.2.4. Deleted

10.2.5. Deleted.

10.2.5.1. Deleted.

10.2.5.2. Deleted.

10.2.6. Open and closed wheel Racing Cars and Sports Libre Racing cars complying with 14.1a must comply with K.1.6.3.

10.2.7. Seating and Seat Belts, except for cars of Periods A – E (Nomenclature and Definitions), must be worn and be correctly adjusted at all times during Events.

10.2.8. Road Cars: front seats may be replaced by fully trimmed Competition versions.

10.2.9. Standard Cars and Road Cars must comply with K.2.1.1 with the exception of Junior Sprint and Junior Hill Climb Competitors who must comply with K.2.1.2.as a minimum.

10.2.10. Modified Cars must comply with K.2.1.2/K2.1.4.

10.2.11. Sports Libre Cars and Racing Cars must be equipped with a homologated FIA safety harness complying with K.2.1.3 or K.2.1.4.

10.2.12. Deleted.

10.2.13. Head restraints (K.13): mandatory for all cars except for cars of Periods A – E (Nomenclature and Definitions).

10.2.14. Fire Extinguishers – K.3.1 recommended.

10.2.15. Towing point(s) of adequate strength and size are mandatory. They must be clearly identified and suitably marked using a contrasting colour and be accessible to the front and rear of the vehicle.

10.3. Windscreen/Glass

10.3.1.

(a) Windscreens are mandatory for all closed vehicles. They are free for open vehicles.

(b) Laminated windscreens, lamp glass security and rear view mirrors are not required unless specified in SRs or where there is a possibility of one car overtaking another.

(c) Windscreen wipers must be operative on all cars with windscreens.

10.4. Engines

10.4.1. Forced induction equivalence 1.4. with the exception of 11., where forced induction equivalence is 1.7.

10.4.2. Rotary engine equivalence 1.5. Forced induction rotary equivalence (1.4 x 1.5) = 2.1 or (1.7 x 1.5) = 2.55.

10.4.3. Must be provided with a means of starting which does not involve push starting, or the use of external equipment or personnel, except in the case of force majeure, unless period defined or vehicles in possession of a Competition Car Log Book or Vehicle Passport prior to 31st December 2018.

10.4.3.1. Any connections to assist the starting of the car must be either in the drivers' cockpit or at the tail of the car requiring horizontal connection.

10.4.4. Undertrays. Must be provided with drainage holes to prevent accumulation of liquids.

10.4.5. Engine Oil Systems – Unless equipped with a closed loop system, a Catch tank of at least a one litre capacity to be incorporated in the oil breather system.

Wheels and tyres

10.5. Must have any nuts securing road wheels, except those of centre lock type, of steel and in thread contact over a minimum length of 1.5 bolt/stud diameters. Extended or composite wheel bolts/studs are prohibited.

10.6. Fuel

10.6.1. For Standard Cars, Road Cars-and Modified Cars, pump fuel is mandatory. Only air may be mixed with the fuel as an oxidant.

10.6.2. Sports Libre and Racing Cars. Only pump fuel or methanol may be used. When using methanol, the addition of 10% by volume of Propanone is allowable (Note J.5.13.6).

(a) Any vehicle using methanol must include an approved additive which provides a distinguishable colour and smell when burning. The maximum permitted volume of additive within the fuel is 0.2%.

10.6.3. All vehicles must be equipped with an effective method of stopping the fuel supply, operable by the Driver when normally seated and with seat belt secured. This is to be combined with or located adjacent to the internal ignition cut-off switch., with the exception of Standard Cars as defined in 11.9. where it is recommended.

10.6.4. Electrically powered vehicles are permitted. Alternative fuels may be permitted subject to Motorsport UK approval.

10.7. Electrical

10.7.1. All vehicles must be equipped with an ignition cut-off switch having positive 'ON/OFF' positions clearly marked. The ignition cut-off and fuel pumps isolation system(s) must be operable by the Driver when normally seated with seat belts secured, with the exception of Standard Cars as defined in 11. where it is recommended.

10.7.2. Lighting equipment is not required unless the vehicle is currently licensed for use on the public highway and competed on the event in a road legal condition. See 10.11.2.

10.7.3. An external circuit breaker to K.8 is mandatory for all cars except open cars of periods A – E (Nomenclature and Definitions) and cars licensed for road use (when it is recommended).

10.8. Brakes

10.8.1. Deleted.

10.8.2. Deleted.

10.9. Transmission

10.9.1. For Road Cars-and Standard Cars, the reverse gear must remain operable at all times.

10.9.2. For all other Categories a reverse gear is recommended.

10.9.3. K.12 recommended for all front engined vehicles.

General

10.10. Timing Struts – Where timing is activated by a light beam, the vehicles will be fitted at the front with a vertical timing strut, minimum vertical height 254mm, the bottom of which shall be not less than 180mm and no more than 200mm from the ground. The strut will be in matt black on both sides, over its total area, which shall be not less than 254mm by 51mm. No other, or further forward, part of the vehicle may interrupt these dimensions or actuate the timing.

Public Highway

10.11. Where cars are required to compete in a road legal condition they must comply with Section J of these regulations, and all statutory regulations concerning the construction and use of vehicles. In addition such cars must:

10.11.1. Be currently registered and taxed as a private car.

10.11.2. Have registration documents and, where a car is required by law to have a certificate, a valid MOT Certificate where appropriate. These documents must be produced at scrutineering UPON REQUEST.

10.11.3. Only a full MOT including lighting is acceptable. See 10.7.2.

11. Regulations for Standard Cars

11.1. Description

11.1.1. Standard Cars– Saloons and Sports Cars produced in quantities of not less than 5000 per annum of unitary construction, two wheel drive and up to 2litre engine capacity. The cars must be manufactured after 1st January 2000 and be type approved. Any replacement components fitted must be a Standard Part/Standard Pattern Part.

11.1.2. Cars must compete in an event in a road legal condition as defined in 10.11.

11.1.3. Organisers may provide an Intro-Class which will allow new drivers to experience competitive motor sport on an event by event basis , with the exception of Juniors (7.1.9).

(a) The RS Clubman licence is acceptable

(b) The Class will run separate to any other session

(c) The vehicle must run on List 1A tyres

11.2. Permitted Modifications

Other than as detailed, no other modifications are permitted:

(i) Any FIA/MSA/Motorsport UK approved/homologated safety equipment may be installed.

(ii) Brake friction material may be uprated.

Engine

11.3. Forced induction equivalence 1.7.

Wheels and tyres

11.4. Standard wheels and tyres from List 1A only may be used.

12. Regulations for Road Cars

Description

12.1.1. Road Cars - Series Production, – Saloons and Sports Cars produced in quantities of not less than 1000 per annum.

12.1.2. Road Cars- Specialist Production Cars with a minimum annual production of 20 Chassis which do not qualify as Series Production Cars.

12.2. Cars must compete in an event in a road legal condition as defined in 10.11.

Chassis

12.3. Manufacturers original chassis structure and specification of construction, dimensions and material. Roll cages must not accept or assist any direct suspension loads.

12.4. Body (including aerodynamics)

12.4.1. Silhouette of the vehicle must remain unaltered in construction, dimension and material. The silhouette will be taken in the condition in which the car competes (convertible closed cars competing with the hood or top not erected shall have the silhouette determined in that condition).

12.4.2. Engine bonnet/cover and luggage/boot cover may be replaced with an alternative material.

12.4.3. Laminated windscreens permitted but all other glass may not be replaced by another material.

12.4.4. Interior trim must remain fitted (except floor carpets/mats).

12.4.5. All working equipment fitted as standard (heater, window mechanisms, sunroof, door handles) must remain operable at all times.

12.5. Engines

12.5.1. For Road Cars – Series Production, the cylinder block and cylinder head must remain in the original position and be externally identifiable as that fitted to the original model or specified option. Induction is free, as are exhaust systems.

12.5.2. For Road Cars – Specialist Production, the cylinder block and head must be of a make and type produced in at least 1,000 identical units originally available through the normal commercial channels of a land vehicle manufacturer.

12.5.3. Must be capable of being started from an onboard power source operable by the driver when seated normally.

12.5.4. Exhaust Catalytic Converters are required per J.5.16.7, except where a vehicle does not require a catalytic converter in accordance with government legislation.

Wheels and tyres

12.6. Except for Period Defined Vehicles (Non-Rally) A-H inclusive tyres are to L List 1A and List 1B.

12.7. Suspension

12.7.1. The suspension type, mountings, mounting method and position must remain the same as that fitted by the vehicle manufacturer with the exception of lever arm shocks which may be changed to Telescopic shock absorbers.

12.7.2. The shock absorbers may be of any make and may be uprated from standard.

12.7.3. Adjustable spring platform struts are permitted.

12.7.4. Deleted.

12.7.5. Springs are free but must retain their original location.

12.7.6. For Road Cars – Series Production bushes may be changed for similar polymer materials but not to spherical or similar metal joints.

12.7.6.1. For Road Cars – Specialist Production bushes may be changed for similar polymer materials, spherical or similar metal joints.

12.7.7. Reciprocating Ball steering may be replaced with rack and pinion.

12.8. Transmission

12.8.1. Road Cars – Series Production.

(a) The gearbox and differential casing must be externally identifiable as that fitted to the original model or specified option and remain in their original position;

(b) The method of gear selection must remain standard (sequential selection only where fitted as standard).

13. Regulations for Modified Cars

Description

13.1. Modified Cars – Series Production. Must have been originally available through the normal commercial channels of the manufacturer in quantities of not less than 1,000 vehicles within 12 consecutive months.

13.2. Modified Cars – Specialist Production. Must have been originally available in quantities of not less than 20 chassis within 12 consecutive months.

13.3. Vehicles produced in lesser quantities may be admitted subject to the manufacturer obtaining approval from Motorsport UK.

Safety

13.3. See section 10.

Chassis

13.4. The chassis or unitary construction must remain to the manufacturer's original specification in construction and material within the wheel hub centres with the exception of the following:

13.4.1. Re-positioning of suspension pick-up points and engine mountings are permitted.

13.4.2. Inner wheel arches only may be modified to allow the attachment of damper mountings.

13.4.3. It is only permitted to make holes for the passage of cables, fuel, water, oil, hydraulic, instrument or fire extinguisher lines as per Vehicle Regulations. All redundant holes must be covered with metal plates.

13.4.4. Reinforcing of the chassis is allowed.

13.4.5. Bulkheads and/or inner wings may be modified to permit the clearance of the induction system. This shall be understood to include air induction ducting, manifolding, trumpets/ram pipes for engine carburation or fuel injection system only.

13.4.6. Localised alteration for the passage/clearance of the exhaust system.

13.5. Bodywork (including aerofoils)

13.5.1. Silhouette of the vehicle as seen in side elevation must remain unaltered, with the exception of engine bonnet/cover and boot lid/rear deck.

13.5.2. The doors, engine, bonnet/cover, luggage compartment cover, boot lid/rear deck or bodywork not forming part of the unitary construction may be changed for ones of different material. Wheel arch extensions are free.

13.5.3. Alternative materials may be used for external mudguards, if attached by bolts and/or rivets.

13.5.4. Detachable hardtops are permitted providing the silhouette remains unaltered.

13.5.5. It is permitted to replace any glass window with plastic (J5.20.8 applies). A hole approximately 15cm diameter may be cut in the window next to the driver for signalling or ventilation.

13.5.6. Demisting apertures are permitted in the rear window. They must be in the form of holes or slots and be positioned close to the top or sides, but not both.

13.5.7. Open car with hoods may have them removed. Vehicles may run open or closed. If running closed, a rear window of safety glass or plastic of minimum thickness 4mm is mandatory. 13.5.8. Tonneau covers are permitted providing they are of flexible material and were originally specified for the vehicle.

13.5.9. Deleted.

13.5.10. Front spoilers/air dams/splitters are permitted below the level of the road wheel centres, up to 15cm beyond the overall plan periphery of the existing bodywork, excluding bumpers. Rear spoilers are permitted within the overall plan periphery of the original vehicle excluding bumpers. A rear spoiler is a raised surface of opaque material integral with the rear deck with no gaps or openings in the surface, front or rear, and not exceeding half the vertical height of the original rear window fitted into the vehicle, measured at the centre of the original window. The vehicle manufacturer's original equipment or a specified option for that vehicle is also permitted.

13.5.11. It is permitted to remove the floor carpets, underfelt, sound insulation throughout the car, the rear seat, the passenger's front seat and the head lining.

13.5.12. It is permitted to carry out modifications to window winders, instrument panels and all driving controls.

13.6. Engine

13.6.1. The engine block must be externally identifiable as that fitted to the original model or specified option. Modification to all components is permitted.

13.6.2. With the exception of any engine fitted to a vehicle complying with 13.1, the engine must be of a make and type produced in at least 1,000 identical units and fitted to a vehicle originally available through the normal commercial channels of a land vehicle manufacturer.

13.6.3. Induction system free.

13.6.4. Oil coolers, dry sump lubrication systems or additional water radiators are permitted within the periphery of the bodywork.

13.6.5. Must be capable of being started from an onboard power source operable by the driver when seated normally

13.6.6. Engine and transmission must remain in a similar position within the vehicle and in the same position relative to each other as in the original model.

13.7. Transmission

13.7.1. Transmission layout to remain as original.

13.7.2. Gearbox and differential are free.

13.7.3. Driven axle(s) free (see 13.8.4).

13.8. Suspension

13.8.1. Additions and modifications to springs, shock absorbers or suspension height are free.

13.8.2. The original type of suspension must be maintained (e.g. twin wishbone set-up cannot replace a single wishbone suspension; a sliding pillar cannot be replaced by a MacPherson strut; a trailing link cannot be replaced by wishbones or coaxial springing).

13.8.3. A live rear axle may not be replaced by an independent system or De Dion.

13.8.4. A live rear axle is allowed location links. If leverarm shock absorbers are an original fitment, they may be replaced by a single location link.

13.8.5. Suspension pick-up point positions may be altered, providing the suspension system is maintained as being the original type.

13.8.6. Road springs are free.

13.8.7. The wheelbase must be to the dimensions of the original vehicle, plus or minus 2% or 5cm whichever is the greater.

Electrical

13.9. Electrical generators may be disconnected or removed.

14. Regulations for Sports Libre Cars

14.1. Vehicles that comply with any of the following Groups:

(a) Any closed wheel vehicle that does not comply with any other category, as defined in 10.1.1.3 to 10.1.5 or 10.1.9 14.1(c) or (d) or 14.1.2.

(b) Deleted.

(c) Sports Racing Cars.

(d) Single seat closed wheel Racing Car the rear wheels enclosed by continuous bodywork.

Regulations for Open Wheel Single Seat Racing Cars

Dimensions

15.1.1.

Maximum width ahead of front wheels	150cm
Maximum width behind front wheels	140cm
Maximum height of any part wider than 110 cm ahead of the front wheels	Not to exceed the top of the front wheel rim
Maximum height	90cm from the ground
Maximum rear overhang	150cm behind rear wheel axis.

15.1.2. Maximum height is measured with the car in any condition and driver aboard. Safety roll-over bars and air boxes are not included in this measurement.

Wheels

15.2.1. Twin rear wheels are permitted.

BDN Automotive

Real-Time Combustion Control

Let the car tune itself, while you can focus on driving!

F1 Technology for everyone! The BDN RT Series is a combustion control system optimising your engine's performance and efficiency accurately to the current ambient conditions using cylinder pressure acquisition. By keeping the engine on the borderline of knocking, not only the performance, but durability will also become a controlled parameter.

- Modular design 4-12 cylinders
- Turn-key solution with engineering support and educational material
- Measurable lap time decrease
- Pressure based knock control (used in F1 only)
- Increased performance
- Increased durability

Compatible with Motec M1 series ECU (Motec package included)

The AI based logic optimises the following parameters by measuring, calculating,and optimising indicated mean effective pressure cycle-by-cycle with different target options, such as maximum performance, minimum fuel consumption, or any user defined optimum:

- Air-to-fuel ratio
- Ignition timing
- Turbocharging parameters
- Variable valve timing
- User defined parameters

NEW BUSINESS PARTNERS
I'M LOOKING FOR YOU!

WHAT YOU WILL GET

We are looking for partnership with determined, open-minded race teams, who could be pioneers of this technology, and enjoy the exclusive benefits of it. BDN provides a full package including excessive engineering support and consultancy.

SCAN ME

https://bdn-automotive.com/products/realtime

Drag Racing

Organisation

Regulations within the Drag Race Yearbook may apply further limitations or requirements, additional to the following:

16.1.1. Unless stated hereafter, Organisers must comply with Sections D and S of these General Regulations.

***16.1.2.** For any Technical or Safety criteria not provided for by these Specific Regulations the SRs must state the definitive source of reference.

16.1.3. Permits may be issued for a Drag Race or a Straightline event which will be run in accordance with the Straightline Event guidelines.

Officials and their duties

16.2.1. Unless stated hereafter, Officials must comply with Section G of the General Regulations.

16.2.2. The Race Director shall have the same responsibilities, duties and powers of a Clerk of the Course and the same discretion in the general conduct and control of the event and the application of penalties for any infringement by participant or vehicle.

16.2.3. Subject to the prescriptions of the General Regulations the decision of the Race Director shall be final.

Competitors

16.3.1. Unless stated hereafter, Competitors must comply with Section H and the specific regulations for Sprints, Hill Climbs and Drag Racing.

16.3.2. Participants shall be deemed to be any person within the meaning of Sections H.1, H.32 and H.33.

16.3.3. The display of any identification, badge or pass will be deemed to identify the person concerned with the entrant and will imply their acceptance of these regulations.

***16.3.4.** Entrants and Drivers must ensure they have a Competition/Entrants Licence valid for the event.

***16.3.5.** The SRs must state what qualification is required to drive a specific category of vehicle.

16.3.6. Where a driver is required to make an observed run prior to taking part in the competition (16.8.1 and 16.8.2) it is the drivers responsibility to report this fact when signing on and await the instructions of the Race Director.

16.3.7. The Race Director may forbid a driver to take part in the competition for reasons of safety or any apparent deficiency in performance.

16.3.8. A driver may not drive more than one vehicle in any category at the same event. Dual eliminator registration is prohibited.

16.3.9. Any driver deemed to have driven in a manner not compatible with general safety or whose behaviour or actions is prejudicial to the interests of the organisers or motor sport generally may be immediately disqualified from the meeting (C.1.1.5).

Vehicles

16.4.1. Unless stated hereafter, Vehicles must comply with Section J and S of the General Regulations.

16.4.2. Trucks or Commercial vehicles are prohibited to take part in Drag Races without the prior approval of Motorsport UK. Series production truck vehicles of up to 1 ton payload are permitted.

16.4.3. Junior Dragsters may not be included in any event without the prior approval of Motorsport UK.

***16.4.4.** Classification, shall be as prescribed in the specific class regulations contained within the SRs.

16.4.5. With the exception of Straightline events annual registration of vehicles and drivers with each Organising Club is mandatory.

16.4.6. Registration must be submitted on the official Race Vehicle Registration form issued by each Organising Club. Forms which are amended, incomplete or defaced are invalid.

16.4.7. Re-registration may be required for any change made to the classification of a vehicle.

16.4.8. Vehicles may be given a permanent race number for the year.

16.4.9. Numbers must be displayed in accordance with the specific class format; affixed in such a way to ensure their durability and legibility and be of sufficient contrast to their background. They shall be subject to the approval of the Chief Timekeeper.

16.4.10. The naming of a vehicle will be subject to the approval of each Organising Club. Duplication of names will not be permitted.

16.4.11. Decals must be displayed as required by the event or series organiser.

16.4.12. Vehicles must be in a clean and presentable condition throughout an event. Personnel attending a competing vehicle should be aware of the same considerations.

16.5. Scrutineering

16.5.1. No vehicle is permitted to take part in practice or a race without the approval of the Chief Scrutineer.

16.5.2. The Race Director may require:

(a) The eligibility of an entrant, driver or vehicle to be checked at any time or prescribed place before or during the meeting or afterwards subject to the Entrant being notified not later than half an hour after the publication of a valid provisional result,

(b) A vehicle to be re-scrutineered at any time throughout the meeting,

(c) A vehicle to be dismantled to ensure it complies with the regulations,

(d) An entrant to supply such components and or samples as may be required,

(e) A driver to be medically examined for reasons of safety,

(f)) A car to practice before its eligibility is verified.

Pits Paddock and Track Fuel

16.6.1.

(i) The handling and storage of fuel must comply with the law and local fire regulations.

(ii) The SRs shall specify the requirements of GRs Q.12.25.1 to Q.12.25.4 inclusive.

(iii) The fuelling and draining of vehicles outside a designated fuelling area is forbidden.

(iv) The engine must be stopped during fuelling and the driver must vacate the vehicle.

(v) The vehicle must be clear of any fuel handling or storage when starting the engine.

(vi) The entrant must ensure that throughout fuelling a person will stand by the vehicle with an adequate fire extinguisher.

16.6.2. Engine starting and Warm-ups. It is mandatory for a driver or competent crew member to be seated in the normal driving position at any time the engine is running.

Medical and Rescue (5 and Section F)

16.7.1. In addition to the requirements of 5.2.1 there must be a second emergency vehicle equipped specifically for fire fighting with the following minimum equipment:

20lb (9kg) dry powder fire extinguishers.

2 fire resistant blankets 6ft x 6ft (2m x 2m).

2 pairs fire resistant/industrial gloves.

16.7.2. The Rescue Unit and the Ambulance must be positioned to ensure unobstructed access to the course.

Practice and Qualification

16.8.1. With the exception of Straightline events a new driver who has not previously held a Competition Licence will be subject to a cockpit orientation (blindfold) test.

16.8.2. A driver may be required to make runs under observation at any time.

Penalties

16.9. Any specific penalties mentioned in these regulations does not preclude the imposition of additional penalties as deemed appropriate.

Instructions and Communications to Competitors

16.10. Any additional instructions published will be deemed to be an Appendix to and have the same powers as these Regulations.

Race Procedures

16.11. In accordance with the requirements of the Supplementary Regulations of the event.

Hot Lap Challenge

Organisation

17.1.1. Unless stated hereafter, Organisers must comply with Sections D and S of these General Regulations. Q4.2.; Q5.1.; Q11.2.4; Q11.2.6.; Q11.2.7.; Q12.1.4.; Q12.2.; Q12.4.; Q12.24. and Q12.25.1. to Q12.25.4. also applies.

*__17.1.2.__ For any Technical or Safety criteria not provided for by these Specific Regulations the SRs must state the definitive source of reference.

*__17.2.4.__ The SRs must state what qualification is required to drive a specific category of vehicle.

17.2.4.1. **Category of Driver**: There will be:

(i) Intro-Class for which a minimum of a RS Clubman licence is acceptable

(ii) Club-Class for which a minimum of a RS Interclub licence is acceptable

(iii) Pro-Class for which the driver must be in possession of a Race Interclub licence, as a minimum.

Designation in regard to (ii) and (iii) above is made by the Organising Committee and will be based upon a drivers previous motor sport experience, in the first instance, and then may be dependent upon other factors e.g. engine capacity, vehicle weight, lap times and previous Hot Lap Challenge classification.

17.2.4.1.1. The Intro-Class provides for an opportunity to experience competitive motor sport on an event by event basis.

(a) The Class will run separate to any other session.

(b) The Competitor will not score Points nor be classified, qualify for any end of day awards or set lap records.

(c) The vehicle must run on List 1A or 1B tyres.

(d) Any competitor who achieves a lap time within 5% of the fastest time of the class above, on three or more occasions, will be reviewed by the Organising Committee who may require the driver to upgrade to the Club-Class.

17.2.4.2. Where the Event forms a round of a Series or Championship a competitor who achieves a lap time within 5%, three or more times, of the fastest time of the class above them will be reviewed by the Organising Committee who may require the driver upgrades to that class.

17.2.4.3. A new driver, who has not previously held a Competition Licence, will be observed during practice by the Clerk of the Course. It is the drivers' responsibility to report this fact when signing on and await the instructions of the Clerk of the Course.

17.2.4.4. A driver may be required to make runs under observation at any time.

17.3.1. Unless stated hereafter, Vehicles must comply with Sections J, K and S of the General Regulations.

17.3.2. For Commercial type vehicles (J.5.20.6) applies.

*__17.3.3.__ Classification shall be as prescribed in the specific class regulations contained within the SRs.

17.3.4. Competition numbers must be in compliance with Q11.4 or Q11.5.

17.3.5. Tyres – Club Class to Section L, List 1A or 1B. Pro Class free.

17.4. **Scrutineering**

17.4.1. The Organising Committee may request the Clerk of the Course to verify the eligibility of a vehicle by requiring it to practice.

17.5.1. **Warm-up & Qualification**

17.5.1.1. On any car driven by a person who has not received six car race or Hot Lap Challenge signatures on his Competition Licence, there shall be on the back of the car a yellow square, 7in x 7in, with a black diagonal cross, with strokes 6in long and 1in wide.

17.5.1.2. A Warm-Up session will be provided.

PUBLICATIONS, TECHNICAL PAPERS & CLUB EQUIPMENT

Subject to their availability the products and their prices listed below are correct at the time of going to press, but may be changed without further notice.

PUBLICATIONS (VAT zero rated)

Motorsport UK Yearbook £35.00
Motorsport UK Karting Yearbook £19.00

CLUB EQUIPMENT (VAT standard rated incl.)

Club Membership cards ..... 200 for £28.00
Signing-On Sheets – Competitors/Officials ..... FOC available on website
Signing-On Sheets – Media ..... FOC available on website
"Prohibited Area" rigid PVC warning signs ..... per pack of 5 £60.00
"Motor Sports Can Be Dangerous" rigid PVC warning sign ..... per pack of 5 £60.00

COMPETITORS EQUIPMENT (VAT standard rated incl.)

Motorsport UK Helmet Approval Sticker £2.50
Motorsport UK FHR Approval Sticker £2.50

TECHNICAL PAPERS (VAT zero rated, except † = standard rate)

Motorsport UK Rollcage Certificate – Official Copy ..... ‡each £30.00
Motorsport UK Historic Rally Vehicle Identity Form Registration ..... ‡£100.00
Motorsport UK Vehicle Passport (payable to Inspecting Scrutineer) £45.00
FIA Historic Technical Passport Application (excluding Registrars Fee) ... *‡each £408.00
FIA Current Homologation Papers for any UK car ..... ‡each £56.00
FIA Current Homologation Papers for any non UK car ..... ‡Price on application
FIA Lapsed Homologation Papers ..... ‡each £47.00
FIA Lapsed Homologation Papers for pre-1995 cars ..... ‡each £32.00

‡ Overseas orders are subject to an additional delivery charge.
* Excluding FIA fee.

For the above items, please address order(s) to:
Sales Dept, Motorsport UK, Bicester OX27 8FY

Purchase on-line from www.motorsportuk.org

Specific Regulations for Trials (T)

(T) Trials

Organisers' Regulations

1. A Permit for the organisation of a Trial is issued at the sole discretion of Motorsport UK.

1.1. A Club will only be allowed to run events up to Interclub status, unless Motorsport UK has specifically approved an application for National status.

1.2. *Wherever possible for Car Trials or Sporting Trials, the use of road sections should be avoided. The Specific Regulations (SRs) should clearly state if the Public Highway is to be used. Any part of an event that takes place on the Public Highway must comply with the Motor Vehicles (Competitions and Trials) Regulations and will require public relations work to be undertaken as specified in R.3.

1.2.1. Organisers intending to use any Forestry Commission property for events must liaise with the Motorsport UK Forestry Liaison Officer at least 3 months before the event.

1.2.2. No contact should be made with Forest District before receiving approval from the Motorsport UK or its appointed Forestry Liaison Officer.

1.3. Special attention should be paid to the following:

1.3.1. Every practicable precaution must be taken to avoid depositing mud or soil on the Public Highway when leaving private property.

1.3.2. Warning notices as required by D.31.1 must be displayed.

1.3.3. The entry in Sporting or Car Trials should be split into groups of equal number, which should start from different observed sections simultaneously.

1.3.4. The beginning and end of observed sections must be marked by signs.

1.3.5. The starts of sections should be reasonably flat and wide so that all Competitors can at least enter the section.

1.3.6. The layout of sections should take account of the location of possible failure points and, particularly for Sporting Trials, safe exit routes.

1.3.7. The layout of sections should ensure that areas can be marshalled by the minimum possible number of Officials.

1.3.8. Sections should if possible be of sufficient width to allow a choice of route and at no point be less than 4m wide, with a 14m turning circle between 'walls' for Car Trials.

1.3.9. Sections should be of a winding nature so as to place a premium on driving skill, although the radius of all corners must be adequate for all cars entered.

1.3.10. The use of trees or natural hazards as course boundaries should be avoided where possible.

1.3.11. Stakes should not be placed against trees.

1.3.12. If possible, alternative routes should be planned in case of a change of weather conditions and to accommodate all types of cars eligible.

1.3.13. It is recommended that sections be laid out using a minimum of 13 pairs of marker stakes (see diagram page 341) of a minimum height of 1m and with colour coding to clearly identify each side of the route.

1.3.14. Metal rod markers should not be used.

1.3.15. Markers should be placed to avoid the likelihood of Competitors putting four wheels out between markers and where they are unlikely to be moved by bushes or branches.

1.3.16. Clearly visible sub-section numbers should have a minimum figure height of 50mm.

1.3.17. If sub-section numbers are not placed on both sides of the route, they should be on the right-hand side, with the corresponding guide markers on the left-hand side.

1.3.18. Sub-section markers should be closely grouped in areas of expected failure.

1.3.19. The Organisers of events on a single site, particularly in Sporting Trials, should have a First Aid Kit (including an eye bath) on-site at a clearly identified location.

1.3.20. Organisers should be aware of the nearest hospital and the best route to get to it in case of incident.

1.3.21. When Competitors under 17 years of age are allowed to compete, organisers should note the information in 4 (H.7).

1.3.22. Organisers may at any convenient time after the start of the competition require Competitors in some or all Classes to increase or decrease the minimum permitted tyre pressure by a maximum of 5lb/sq in. This decision must be advised to Competitors in writing and sufficient time must be allowed for them to comply.

1.3.23. No person under the age of 14 can act as a marshal or assistant marshal unless under the constant supervision of a marshal over 18 years old.

1.3.24. At single site events a medium sized spill kit must be available at each section or group of adjacent sections. At events which utilize the public highway each vehicle must carry a small spill kit.

Classic Reliability Trials (8)

2.1. Classic Reliability Trials must meet the requirements of 1 above (with the exception of 1.3.12 and 1.3.13) and the following additional requirements:

2.1.1. Any time schedule on the public highway or any part of the route must not exceed:

Motorways	60mph
Trunk and A-roads	30mph
B-roads	26 2/3 mph (daylight), 20mph (darkness)
All other roads	20mph (daylight), 15mph (darkness)
All heavily populated areas	15mph

Note: Throughout these sections an asterisk(*) indicates a requirement for additional information to be printed in the Supplementary Regulations (SRs). Text shown in Italics indicate a Regulation which may be amended in the SRs. Text shown in red indicates a new or amended regulation for 2022.

2.1.2. When Time Controls are less than 20 miles apart (except start and finish controls where the length of the route is 20 miles or less), the time schedule on the public highway must not exceed an average speed of 15mph.

2.1.3. The Route Card must show both time and mileage between individual points so that changes in Permitted average speeds are apparent.

2.1.4. *Any maps required by Competitors must be notified in the SRs.

2.1.5. Observed sections may not be more than a quarter of a mile long, and no special time schedule may be applied from start to finish of a section more than 100yds long (an Observed Test).

2.2. Organisers must:

2.2.1. Ensure the status of any tracks along the route is verified.

2.2.2. Where it is proposed to use or cross any Footpath, Bridleway or Restricted Byway:

2.2.3. Obtain the agreement of the Landowner and the Highway Authority (unless the route is already on a road of higher status).

2.2.4. Notify the Police (clarifying the nature of the event).

2.2.5. Notify the National Parks (if appropriate).

2.2.6. Deleted.

2.2.7. Ensure a Liaison Officer is appointed to deal with the above matters and resolve any difficulties.

2.2.8. Check vehicles for sound before the Start and along the route. These checks should be manned by experienced Driving Standards Observers. Noisy cars must be stopped if necessary.

2.2.9. Locate any Holding Controls so as to avoid public nuisance.

2.2.10. Draw to the attention of Competitors any sensitive areas in the vicinity of the route.

2.2.11. Brief all Marshals and ensure they are readily identified.

2.2.12. Appoint and brief a Chief Official, who should be clearly identified, for each observed section to ensure that the Trial is seen not to unduly inconvenience members of the public.

2.2.13. The Chief Official must have a working knowledge of the Rights of Use of the section.

2.2.14. Organisers should notify the appropriate Parish Council.

2.3. Organisers should issue instructions on the sensible use of the roads, including:

2.3.1. Closing of gates etc.

2.3.2. Clearing of roads at end of sections.

2.3.3. Following the 'Country Code', adding that that failure to observe the Code may lead to disciplinary action.

2.4. SRs and Final Instructions to Competitors in events using Footpaths, Bridleways and Restricted Byways should include the following statement:

This event is routed along and/or across public rights of way. Competitors must exercise caution and reduce their speed accordingly near other path users. Be especially careful near horses. Slow down, stop and switch off your engine if necessary.

Competitors' Regulations

Eligibility

3.1. *Competitors must report at the start and for scrutineering at the times stated in the SRs.

3.1.1. Any Competitor reporting late may be fined, disqualified or may forfeit any claim to a favourable starting position.

3.1.2. At the Start each Competitor, any Passengers and the vehicle must all be checked for eligibility.

3.1.3. Deleted.

3.1.4. Deleted.

3.1.5. Drivers and passengers must produce a valid Club Membership Card and Competition Licence as detailed in Section H.

3.1.6. Deleted.

3.2. Cars competing in Sporting Trials must comply with Technical Regulations 9 and 12 or 13 as appropriate.

3.2.1. Cars competing in Car Trials must comply with Technical Regulations 9 and 11, except that in Clubman events the Organisers may state in the SRs that any or all of the following Car Trials Technical Regulations have been replaced by the equivalent Classic Trials Regulations: 11.9.1, 11.9.4, 11.9.5, 11.12, 11.13, 11.14.1 and 11.14.3.

3.2.2. Cars competing in Classic Trials must comply with Technical Regulations 9 and 10.

The Crew

4.1. *During all Observed Sections and tests the seat alongside the Driver must be occupied in accordance with the requirements below (except as specified in 4.1.8):*

4.1.1. Passengers must be properly seated, i.e. both the Passenger and the seat back must be upright and facing forward. In Sporting Trials the passenger's hips must be located within the cockpit and on or in front of the rear axle line.

4.1.2. Where the Driver is over 17 years old and holds a full RTA Licence, the Passenger must fulfil the minimum age requirement of 4.1.5.

4.1.3. In Car Trials, entries may be accepted from Drivers aged 14, 15 or 16, or from Drivers of 17 or over who do not hold a full RTA Licence. In such cases the Driver must be accompanied by a Passenger who holds a full RTA Licence and is experienced as a Driver of Car Trials or Sporting Trials.

4.1.4. In Sporting Trials, entries may be accepted from Drivers aged 16, or from Drivers of 17 or over who do not hold a full RTA Licence. These Drivers must be accompanied by a Passenger who holds a full RTA Licence and is experienced as a Driver in Sporting Trials and who must produce a valid Club Membership Card.

4.1.5. Minimum Passenger ages are as follows:

Sporting Trials	14
Classic Reliability Trials	
Open or Convertible cars	14
Saloons or hardtop cars	12
Car Trials	12

4.1.6. Additionally the rear seats of saloon cars can be occupied by the number of people for whom they were designed. Passengers who occupy the rear seats of the vehicle must not be less than 2 years of age, any child under 12 years of age or 135cm in height must be seated using an approved 'child restraint'.

4.1.7. Passengers under 18 years old will not be considered as Competitors for the purpose of Club membership. Passengers aged between 2 and 12 years old will be signed on by their parent or guardian.

4.1.8. In Classic Reliability Trials, passengers are not required to occupy the front seat where suitable rear seats are available, unless the SRs state otherwise. All passengers in a vehicle with a soft-top or no roof must be at least 14 years of age. However, in Class 8 only one Passenger is allowed, who must occupy the seat alongside the Driver.

4.1.9. Members of the crew at the Start cannot be varied during an event, except with Official approval.

4.1.10. *The same Driver must drive throughout any Competition.*

4.1.11. 'Bouncing' will be Permitted only within the confines of the seating compartment, and then only so long as no portion of either the Driver's or Passenger's body, other than arms and hands, is placed outside the sides of the car or behind the seat they are occupying.

Numbers

5.1. Numbers will be allocated by ballot within Classes.

5.1.1. Number cards will be issued at the Start and must be displayed on each car throughout the Competition.

5.1.2. *In Classic Reliability Trials, unless the SRs state otherwise, numbers will be allocated by the Organisers.

5.2. Competitors will start in numerical order.

5.2.1. In Car Trials unless SRs state otherwise, at some convenient break after approximately half the Observed Sections have been attempted, the running order will be reversed within each Class. Competitors will remain in the correct running order unless instructed otherwise by an Official.

5.2.2. Number cards must be removed at the Finish or if a Competitor retires.

Observed Sections and Route

6.1. Details of observed sections and tests (if any) must be issued at the Start and the onus of following the correct route will rest with the Competitor.

6.1.1. Any signs displayed, other than in an observed section, will be a supplementary aid without mandatory authority.

6.2. *There will be no time schedule to be maintained during the event (except in Classic Reliability Trials) unless the SRs specify otherwise.

6.2.1. Competitors will proceed from point to point with as little delay as possible and any Competitor suspected of loitering may be ordered to proceed by an Official.

6.2.2. Competitors arriving at a test or an Observed Section more than 20 minutes after the preceding Competitor may be refused permission to attempt that test or observed section.

6.2.3. No unauthorised assistance is allowed and cars must complete the course under their own power.

6.2.4. No case of force majeure will be taken into consideration.

6.2.5. The SRs will specify the location of the finish.

6.3. Before attempting an observed section, vehicles must be brought to rest with a leading front wheel hub vertically over the Start line, as indicated by Officials, and the Driver must not proceed until instructed to do so.

6.3.1. It is permissible to start the car when only one hub is on the line and the car is askew, providing the other hub has not crossed the line.

6.3.2. Competitors must attempt to negotiate observed sections non-stop, unless the SRs specify otherwise.

6.3.3. Failure of a car to maintain unassisted forward motion in the direction of the course will be regarded as failure to comply with this requirement.

6.3.4. The point of failure will be at a vertical line from the centre of the hub of the front wheel which is the furthest from the start of the section. See Appendix 1, Drawing number 6.

6.3.5. Observed sections may be divided into subsections.

6.3.6. In such cases signs will indicate the beginning and end of the sub-sections.

6.3.7. A vehicle will be deemed to have entered an observed section or subsection when a vertical line from the leading front wheel hub centre has passed any marker indicating the beginning of the section.

6.3.8. A car will be considered to have left an observed section or sub-section when a vertical line from the leading front wheel hub centre has passed any marker indicating the end of the section.

6.3.9. Failure to proceed, for whatever reason, from the starting position into an observed section when instructed to do so will be regarded as failure in that section.

6.3.10. Any failure in a particular sub-section will constitute failure in all subsequent sub-sections.

6.3.11. The Start line will indicate the greatest penalty and the Finish line zero penalty.

6.4. A Competitor will also be considered to have failed to negotiate an observed section non-stop if:

6.4.1. Any part of their vehicle or its occupants touch a marker.

6.4.2. All four wheels are positioned outside the boundary of the course at the same time. The boundary is represented by a straight line drawn from course marker to course marker along the direction of the course.

6.4.3. The point of failure will be considered to be that at which any marker is first struck, or the point at which the boundary of the course is first crossed by all wheels of the competing vehicle.

6.4.4. Should this point of failure coincide with the division between two sub-sections, the marks lost will be those appropriate to failure in whichever of the two sub-sections provides the greater penalty.

6.4.5. All markers are deemed live and those markers that are not in the sequence being negotiated by the competitor shall be considered as indicating the section's boundary, unless deemed otherwise on a particular section by the Clerk of the Course. In such cases the penalty recorded shall be that of the part of the section between gates and not necessarily the value of the marker touched.

Results

7.1. Judges may be appointed to adjudicate on:

7.1.1. Conforming with the correct route on the course.

7.1.2. Touching markers.

7.1.3. Failure to proceed non-stop when required.

7.1.4. Conformity with regulation 4.

7.1.5. Noise.

7.1.6. Time of arrival/departure at observed section, test, control or check.

7.1.7. Unauthorised smoking.

7.1.8. Unauthorised assistance or servicing.

7.2. Performances on any observed section or test may be ignored at the Organiser's discretion, even though there have been successful attempts to negotiate the section or test.

7.2.1. If this discretion is exercised, no performance on the section or the test in question will be taken into account when compiling the results.

7.3.

(a) Classic Reliability Trials. To be classified as a finisher, a Competitor, being the car and crew entered, must have attempted at least 75% of the total number of observed sections and arrive at the Finish under its own power within 20 minutes of the time of arrival of the preceding vehicle.

(b) Car and Sporting Car Trials. To be classified as a finisher a Competitor must have attempted at least 75% of the sections and hand in his score card to the Secretary of the Meeting within 20 minutes of the preceding competitor.

7.3.1. Competitors start with zero marks.

7.3.2. The Competitor incurring the least penalty, or best Index of Performance, will be the winner, and so on.

7.3.3. Except in Classic Reliability Trials, each Competitor will be provided with a results card which must be produced on demand by Officials to mark at each section.

7.3.4. *In calculating Class positions the actual number of marks lost by each Competitor is the deciding factor. However, where an overall best performance (irrespective of Class) is required, an Index of Performance will be established for each Class by taking the average performance of the best 50% of finishers (or if there is an odd number of finishers, the total plus one) in the respective Class.

7.3.5. To be classified as a finisher for index purposes only, a Competitor must have attempted all sections.

7.3.6. Competitors' marks lost are then expressed as a percentage of this index.

7.3.7. In Classic Reliability Trials where an overall best performance is required (irrespective of Class), the SRs must specify whether actual marks lost or Index of Performance will apply.

7.4. In the event that the best 50% of finishers (as defined in 7.3.4) represents in less than five Competitors, scores equivalent to that of the Class winner must be added to the results of the Class a sufficient number of times so that the average for the Class can be based on five scores.

7.4.1. In the event of one or more Competitors finishing with a total score of zero for the whole event, a notional penalty of one mark will be added to the total score of ALL finishers before calculating the Index of Performance.

7.4.2. Ties will be resolved by comparing the number of penalties lost by each Competitor on each section, the winner being the Competitor who has the greater number of low penalties. Should this method not resolve the tie, the Organisers may resort to the 'furthest, cleanest' principle, starting from the first hill.

7.5. *Penalty marks will be incurred as follows, unless otherwise stated in the SRs:

		Marks Lost
Each minute late in reporting at a Start:		5
(a)	Each minute late in reporting at the Start or Re-Start	5
(b)	Failing in observed section not divided into sub-sections	6
(c)	Failing in observed section which includes a stop and Re-Start type test	6
(d)	Failing in an observed section which is divided into sub-sections. The penalty for failure will decrease In proportion to the number of sub-sections negotiated non-stop	12
(e)	Failing in observed section which includes a stop and Re-Start type test. (The penalty for failure will decrease according to the position of the test within the section)	12
(f)	Not attempting, or being ready to attempt, an observed section, sub- section or test when instructed so to do	12
(g)	Not complying with a reasonable instruction by an Official for which a penalty is not otherwise stipulated, provided warning of the penalty is given	12
(h)	Driver and/or Passengers not seated in accordance with 4.	12
(i)	Each minute early or late arriving at or departing from a time control, 1 mark/min subject to penalty-free time allowance of plus or minus five minutes	(max 12)
(j)	Causing undue noise at any point	12
(k)	Offence under R.13 (k) (l)	12
(l)	Additional penalty. 8.10 refers	12
(m)	For second offence under (j), (k) or (l)	Disqualification
(n)	Varying ballast during event (per offence)	50
(o)	Running with tyre pressure lower than that Permitted by Technical Regulations	50

Classic Reliability Trials (2)

8.1. *The SRs must specify the following, which are additional to and take precedence over 4.1 - 7.5.

8.1.1. Any public roads which are to be part of the route.

8.1.2. Any observed sections or tests on public roads.

8.1.3. The method of detailing the route and any maps required.

8.1.4. Any time schedule.

8.1.5. The time interval between cars at the Start.

8.1.6. The method of resolving ties.

8.1.7. The boundaries of observed sections which must be indicated by natural hazards, flags or posts.

8.1.8. The Start or Re-Start Line in an observed section or test which may be varied for each Class.

8.1.9. Any signs displayed, except during an observed section, test or quiet zone, will be considered as supplementary aid without mandatory authority unless otherwise specified in the SRs. The mandatory marking for quiet zones does not preclude the Competitor's responsibility to take necessary action should the sign not be in position.

8.2. No private road must be used by Competitors unless specific permission to do so is given in the Road Book or Route Card.

8.2.1. Competitors must visit controls, checks, observed sections and tests in the order set out in the Road Book or Route Card, unless otherwise specified.

8.2.2. A control or check is considered to extend for 50 metres around the actual point at which Officials are making records, unless clearly visible signs are displayed to define a different area.

8.3. Judges may be appointed to adjudicate on:

8.3.1. Stopping at Stop and Give Way signs.

8.3.2. Unauthorised use of auxiliary lights.

8.3.3. Unauthorised possession of radio equipment.

8.3.4. Contravention of Out of Bound areas.

8.4. Driving Standards Observers may be appointed to adjudicate on:

8.4.1. Excessive vehicle sound (observed during the event).

8.4.2. Excessive speed.

8.4.3. Driving in a manner likely to bring Motor Sport into disrepute.

8.4.4. Inconsiderate parking or waiting.

8.5. The Official in charge of any control or check may decline to mark or may withhold a Competitor's Road Book, Route Card or Time Card if the car concerned has suffered damage to the exhaust system, resulting in excessive sound.

8.5.1. *The Organisers may establish a check at any point to observe maintenance of a set speed, time schedule or route, provided the intention to do so is stated in the SRs and Competitors are given information to enable them to comply.

8.5.2. *The SRs must specify the exact procedure to be followed on each section where there is a stop and Re-Start test. Unless the SRs specify otherwise, a stop and Re-Start must take place at either a line to be stopped astride, or in a designated zone within which at least two wheels must be placed. When the car, as judged by a Marshal, is completely at rest, it must re-start in a forwards direction only. Any rearward movement of the vehicle will incur a penalty.

Timing

8.6. Standard Time is the time of day a notional Competitor (number zero) would be due at any Control or Check.

8.6.1. Scheduled Time is the actual time of day each Competitor is required to be at any specified point. Schedule Time can be calculated for any point for any Competitor by adding that Competitor's competition number multiplied by the time interval between Competitors at the Start to the Standard Time at that point.

8.6.2. Target Time is the time specified for covering the distance between any two consecutive controls or checks.

8.6.3. Due Time is the time of day a Competitor is due at any control or check, inclusive of any previous lateness.

8.7. All Official clocks or watches must be set to GMT/BST time so that a Competitor can always verify the accuracy of a timepiece.

8.7.1. Competitors will be timed by the Official timepieces in the charge of Officials.

8.7.2. The onus of presenting the Road Book or Route or Time Card rests with the Competitor.

8.7.3. When Scheduled Time is used, a Competitor late at one control or check may be an equivalent amount late at succeeding controls or checks without incurring further penalty. This is termed 'penalty free lateness'.

8.7.4. When Target Time is used, each period of time must be treated individually and no penalties thereby incurred are carried forward. Nevertheless, whichever system of timing is used, a Competitor will be considered not to have reported at a control or check if more than 30 minutes past Due Time, unless the SRs specify a shorter period.

8.8. Competitors delayed under the instructions of a bona fide Official of the event may claim an Official delay allowance free of penalty.

8.8.1. *The Organisers may require any Competitor who is late to reduce this lateness by either foregoing or reducing the period of time provided for remaining at a control or Official halt, so long as an instruction to this effect is given in the SRs or Official Instructions for the event.

8.9. Competitors can themselves reduce lateness without penalty as follows, unless either forbidden to do so by the SRs or if, by doing so, they breach 8.10.

8.9.1. When Target Times are used, by covering the distance between any two or more points in a time less than the Target Time, so long as they do not report at a control or check before the Scheduled Time.

8.9.2. When Scheduled Time is used, by reporting at a control or check following one at which a penalty was applied for lateness, at any time not earlier than Scheduled Time.

8.10. A Competitor found to have travelled a distance greater than four miles between two consecutive time controls in less than three-quarters of the time specified by the valid Official time schedule will be penalised in accordance with 7.5(i) and (l).

8.11. No oral instruction to Competitors during an event will be valid if it affects the route, the time schedule, the layout or the performance of an observed section or test.

8.11.1. Any such instruction must be displayed as an Official notice or issued in writing to each Competitor.

8.12. Any Competitor driving at an excessive speed, in a reckless manner or in a manner likely to bring Motor Sport into disrepute, or convicted of any driving offence committed during an event, may be disqualified.

8.13. Competitors must declare in writing to the Organisers at the Finish whether during the competition they have been involved in any incident or accident involving or causing damage to other persons or property.

8.14. Penalty marks will be incurred as per 7.5.

Technical Regulations

9. In addition to complying with Section J and the appropriate sections relating to their category of Trial, all vehicles competing in Classic Reliability Trials, Car Trials or Sporting Trials must meet the following Regulations:

Body (Including Aerodynamics)

9.1. All vehicles (except for Sporting Trials) must be equipped with an effective windscreen or aero-type screen

9.1.1. The body overhang of non-production cars must not exceed one-fifth of the overall car length at the front, and one-third at the rear. Overhang is measured from the line of the road wheel centres

9.1.2. For production cars, any extensions must not exceed the overhang proportions of a non-production car. Any additional spare wheel carrier should be fitted as close as possible to the body. Production cars need not comply with J.5.2 in respect of bonnets.

9.1.3. With the exception of cars of periods A to D all cars must be equipped on all wheels with mudguards which present no sharp edges and cover the complete wheel (flange+rim+tyre) around an arc of 120 degrees. This minimum coverage must:

(a) be achieved with a continuous surface of rigid material. The rear tyre must not be visible when viewed from above

(b) extend forward ahead of the axle line

(c) extend downward behind the wheel

(d) extend downward behind the driven wheel to a point no more than 150mm above the axle centre line.

Motorsport UK

OPEN
Monday – Friday
9.00–17.00

Tel: 01753 765000

Membership Team:
Tel: 01753 765050

Website:
www.motorsportuk.org

Seating

9.2. Vehicles must be equipped with two fixed seats for Driver and Passenger, the rearmost part of which must not be behind the rear wheel axis.

Wheels

9.3. Duplicated driving wheels are not Permitted unless specified in the SRs.

9.3.1. Competitors must carry a spare wheel and tyre as a replacement for one wheel on the car.

Transmission

9.4. Be fitted with non-torque biasing differential in full and free operation between the driving wheels unless:

9.4.1. A differential was not fitted by the manufacturer.

9.4.2. The vehicle is restricted to running in a nominated Class or Formula.

9.5. Vehicles must be two-wheel drive only, unless SRs allow four-wheel drive.

9.5.1. Four-wheel drive vehicles operating in two-wheel drive mode are not eligible, unless Permitted by SRs.

Silencing

9.6. Silencing must comply with noise levels specified in J.5.17.

Safety

9.7. If using a non-standard car, the fitting of a safety roll-over bar as specified in the safety requirements section of K.1.6.1 is recommended.

Miscellaneous

9.8. Other than Section J and in the following sections, there are no special requirements under Vehicle Regulations for: Chassis/Engines, Suspension, Brakes, Steering, Cooling Oil Systems, Fuel Systems, Electrical Systems, Weight/Ballast, Exhausts.

9.8.1. *The vehicle must comply with statutory regulations as to construction and use and lighting of vehicles (particularly regarding brakes, lighting, tyres, warning devices, rear view mirrors, wings, silencers, speedometers and windscreens) unless the SRs state otherwise.

9.8.2. Where fitted with forced induction, a coefficient of 1.4 must be applied.

9.8.3. Auxiliary lamps unless fitted as standard equipment using gas discharge or LED technology are not permitted and gas discharge or LED headlamp units may not be retro fitted.

9.8.4. Battery powered vehicles may compete in appropriate classes in Car Trials and Classic Reliability Trials, (excluding Sporting Car Trials), subject to SRs.

9.8.5. Rearward vision whilst properly seated within the confines of the vehicle's bodywork or ROPS must be possible. Vehicles with solid rear bulkheads or an obstructed view along the centreline of the longitudinal axis must be fitted with either external rear view mirrors or a reversing camera. Mirrors and/or cameras must be operational during competition.

Classic Reliability Trial Vehicles

10. Classic Reliability Trial Vehicles will be classified as follows, unless otherwise stated in the SRs:

Class	*Description*
1	Front-engined, front wheel drive production cars (except vehicles in Class 6)
2	Production cars built prior to 1941 and the following: MG TC, Morgan 4-4 Series I, HRG 1100 & 1500, and Ford models (upright models to 1959) E04A, E494A, E4930A/B, E93A, E493A and 103E
3	Front-engined, rear wheel drive production saloons (except vehicles in Class 6)
4	Rear-engined, rear wheel drive production saloons up to and including 1300cc (except vehicles in Class 7)
5 (a)	Front-engined production sports cars (except vehicles in Classes 1 or 6)
5 (b)	Vehicles built from pre-1941 components (except vehicles in Class 2) and satisfying the tyre regulations in 10.11
6 (a)	Rear-engined, rear wheel drive production cars (except vehicles in Class 4)
6 (b)	Front-engined production cars fitted with torque biasing differentials as standard equipment
7 (a)	Production cars modified beyond Permitted limits
7 (b)	Rear-engined production cars fitted with torque biasing differentials as standard equipment
7 (c)	Front-engined cars manufactured on a limited basis conforming to an accepted specification. Where modified beyond the accepted specification these cars will be classified in Class 8. These cars comply with either or both of 7 (c) (i) and/or 7 (c) (ii) below:
7 (c) (i)	Have the rearmost part of the front seat cushion(s) forward of any part of the rear tyres
7 (c) (ii)	Have a wheelbase of 90in (228.6cm) or greater
8 (a)	Non-production cars
8 (b)	Rear-engined cars (except vehicles in Classes 4, 6 and 7)
8 (c)	Front-engined cars manufactured on a limited basis (except those in Class 7) including those which:
8 (c) (i)	Have the rearmost part of the front seat cushion(s) rearward of any part of the rear tyres, or
8 (c) (ii)	Have a wheelbase less than 90in (228.6cm)

10.1. A current MoT certificate, where appropriate, must be produced at the scrutineers request.

Safety

10.2. All vehicles must comply with Construction and Use Regulations and be fitted with safety belts if appropriate. Where fitted, seat belts must be worn on the public highway. Fire extinguishers to a level of safety specified in K.3.2 are mandatory and which are accessible to the crew (note a 1.75ltr minimum for AFFF or 2x1ltr AFFF or 2x1kg Powder is permitted).

Chassis/Body

10.3. Chassis/body structures must comply with definitions of a Saloon, Closed, Sports or Touring car as applicable. In particular vehicles must:

10.3.1. Retain their original wheelbase. Any alteration to the wheelbase of a production car (except in Class 2) will transfer the car to Class 8.

10.3.2. Be equipped with the same number of seats as intended by the manufacturer.

10.3.3. Have the forward and rearward bulkheads of the engine compartment in their original positions.

10.3.4. Retain the engine cover, boot lid and wings, although the material may be changed.

10.4. The weight distribution of the vehicle may be altered by the addition of ballast.

10.4.1. The position of the battery, spare wheel and fuel tank may be changed but any further modifications will cause the vehicle to be reclassified to Class 7.

10.4.2. In Classes 1 to 7 any ballast, tool or other boxes must be positioned within the body shell or the bumpers, firmly secured and not visible, protruding or varied during events (10.5).

10.4.3. A luggage box within the planview of the car may be included in an accepted specification for a car in Class 7(c).

10.5. The silhouette of vehicles in Classes 1 to 6, as seen from the side, must be unaltered except for the engine cover and bumpers. Bumpers may be removed, but if retained must be in the original manufacturer's position.

10.5.1. In Class 2 vehicles the chassis must be that of the original manufacturer for the vehicle, although a change in bodywork is permitted providing it is in keeping with the period.

10.5.2. To be eligible for Class 7, the chassis/floor pan of the original car (between wheel centres) must be retained.

Engine

10.6. The engine must comply with J.5.4.

10.6.1. There are no restrictions on engine tuning, providing the cylinder block is of the same manufacture and configuration as the original.

10.6.2. The make, type and number of carburettors is unrestricted.

10.6.3. The position of the engine mountings in the chassis may not be altered. Any further modifications will cause the vehicle to be reclassified to Class 7.

10.6.4. No part of the external exhaust system may be more than one metre above the ground.

Brakes

10.7. Vehicles must not have separate braking for individual driven wheels (fiddle brakes).

Suspension

10.8. Springs and shock absorbers may be changed and additional springs and shock absorbers fitted.

10.8.1. Anti-tramp and anti-roll bars, Panhard Rods and Watts Linkages are permitted.

10.8.2. Except for Classes 7(a) and 8, the original springing system and spring mounting points must be retained in operational use, eg leaf spring systems must retain at least the minimum number of leaves specified by the manufacturer and must not be replaced by coil or other springing systems.

Wheels and Tyres

10.9. Wheels of up to the standard diameter must be used, except for Classes 5(b), 7(a) and 8 where wheel diameter is free.

10.9.1. In Class 8, the maximum tyre section must be 185.

10.9.2. In all Classes 1 to 8 (except Class 2) the maximum permitted difference between front and rear tyres must be two sections.

10.9.3. No tyre may be smaller than that recommended by the car manufacturer.

10.9.4. Standard tyres must be used, with the exception of Michelin XRN, Pirelli P7, Uniband Rally Steel, Goodyear All Weather Steel Radial, Goodyear Ultra Grip, Goodyear Ultra Grip II, and Sterling (ATS) All Seasons Remould. All types of Grip, Town & Country, M&S or All Seasons patterns are prohibited.

10.10. In all Classes, spare wheels must be firmly secured by a permanent fixing.

10.10.1. Not more than two spare wheels may be carried externally, and these must be fitted as close as possible to the bodywork (excluding bumpers).

10.10.2. No part of the spare wheel(s) may be mounted externally in front of the windscreen or on the roof.

10.10.3. Cars with an external rear-mounted spare wheel in the manufacturer's standard position may add a second spare wheel, mounted flush with the original wheel, with no spacer.

10.10.4. The spare wheel(s) or mounting(s) may not extend rearwards more that 200mm from a vertical line passing through the rearmost part of the original bodywork (excluding bumpers), or more than 100mm beyond the rearmost part of the original bumper position for the model of vehicle, whichever creates the lesser protrusion. An alternative maximum dimension, not exceeding 400mm, may be included in an accepted specification for a car in Class 7(c).

10.10.5. In all cases, wheels fitted in the manufacturer's original position and number, are acceptable.

10.11. Class 2 vehicles must use cross-ply tyres (which need not be listed in Lists I or II but which must not be of Grip, Town & Country, Dual Purpose or M&S pattern), Class 2 vehicles must also be:

10.11.1. Fitted with tyres up to 6.00 section maximum if engine capacity is up to and including 1999cc.

10.11.2. Fitted with tyres up to 7.50 section maximum if engine capacity is over 1999cc.

Transmission

10.12. It is not Permitted to change the gearbox or transaxle casing (except in Class 7(a) or 8).

10.12.1. Original gear ratios may be changed.

10.12.2. It is not Permitted to fit limited slip, torque biasing, locked or lockable differentials other than as provided for in Classes 6 and 7(b) as standard equipment.

10.12.3. The rear axle casing must not be modified, except for cars in Classes 7 and 8 and those cars in Classes 1 and 3 to 6 whose model and mark type was originally manufactured before 1955.

10.12.4. Cars may fit replacement differentials, crown wheels and pinions provided the differential action remains free operating.

Electrical Systems

10.13. Vehicles must have a maximum of four forward facing beams in addition to side and indicator lights.

10.13.1. Auxiliary lights should not be used in non-competitive sections except in fog or falling snow as permitted by law.

10.13.2. All lights must be fitted and used in accordance with the Motor Vehicle Lighting Regulations.

Miscellaneous

10.14. Any car which has been improved within the manufacturer's specification for the range will be considered as a production car.

10.14.1. The fitting of a safety roll-over bar is recommended.

10.14.2. The fitting of sump, chassis and exhaust under body guards and proprietary tow bars is permitted.

10.14.3. The footbrake, clutch and accelerator pedals must all be in their original positions.

10.14.4. Silencing of vehicles must be to the levels specified in J.5.17, with engines running at three quarters maximum rpm.

10.14.5. For vehicles in Class 2 (pre-1941) any mechanical modification, as permitted by 6, must be compatible with the period.

Car Trials Formula

11. Classes are free but must be stated in the SRs. The following are suggested.

11.1. Class 1: 2WD Series Production Cars carrying no ballast.

11.1.1. Two Wheel Drive Series Production Cars, first registered on or after 1.1.98 taxed for road use, carrying no ballast, no modifications and driven to the venue.

11.1.2. The original carburettors, or fuel injection system including the throttle body and plenum chamber, including the air filter system must be retained.

11.1.3. It is permitted to replace the air filter element within the original housing.

11.1.4. It is permitted to fit a sump guard weighing not more than 10kg.

11.1.5. Wheels and tyres may be altered in accordance with 11.12.

11.2. Class 2: FWD Series Production Cars.

11.2.1. Front Wheel Drive Series Production Cars not eligible for Class 1.

11.3. Class 3: RWD Series Production Cars.

11.3.1. Rear Wheel Drive Series Production Cars not eligible for Class 1.

11.4. Class 4: Modified Series Production Cars and Kit Cars. This Class covers:

11.4.1. Series Production cars modified beyond Regulation 11.1 to 11.3 and modified up to the limits specified in 10 (Classes 1-6)

11.4.2. Front-engined Kit cars to approved Motorsport UK specification

11.4.3. Front-engined Kit cars modified beyond Car Trials Regulations and modified up to the limits specified in 10 Class 7(c) (ACTC approved specification).

11.5. Class 5: 4WD Series Production Cars.

11.5.1. Four Wheel Drive Series Production Cars of monocoque construction, taxed for road use, carrying no ballast, unmodified, and driven to the venue.

11.5.2. Where fitted with a dual range transmission, only high range may be used.

11.5.3. Competitors are reminded of the requirements of 11.8.3 to 11.8.6.

11.5.4. The original carburettors, or fuel injection system including the throttle body and plenum chamber, including the air filter system must be retained.

11.5.5. It is permitted to replace the air filter element within the original housing.

11.5.6. Wheels and tyres may be altered in accordance with 11.12.

General

11.6. *Any car fitted with a torque biasing differential or any other form of traction control as catalogued for that car will have tyre pressures set at 4 psi above the specified Class pressure.

11.6.1. Cars with an overall length of 166 inches and over in Classes 1 and 2 above may reduce tyre pressures by not more than 4 psi, subject to an absolute minimum pressure of 10 psi.

11.6.2. An Official handbook as issued by the vehicle manufacturer, showing the specification normally sold on the UK market, must be produced on demand.

11.6.3. Optional or alternative equipment as listed in the manufacturer's handbook may be fitted, with the exception of gear and differential ratios.

11.6.4. Special tuning and competition catalogues etc are not acceptable as manufacturer's handbooks.

Safety

11.7. Vehicles must comply with Construction and Use Regulations, and be fitted with safety belts if appropriate. The following are recommended:

11.7.1. Safety roll-over bar to safety criteria K.1.6.1 and 1.6.2.

11.7.2. The wearing of seat belts is optional when fitted to the vehicle.

11.7.3. Fire extinguishers to safety criteria K.3.2. (note a 1.75ltr minimum for AFFF or 2x1ltr AFFF or 2x1Kg Powder is permitted).

Chassis/Body

11.8. Vehicles should not have any chassis or body alterations except:

11.8.1. Bodywork ahead of and below the centre line of the front wheels and behind and below the centre line of the rear wheels may be removed

11.8.2. Panels to the front and rear of the centre line of the front and rear wheels respectively may be replaced by panels from any model in the same family of cars.

11.8.3. The weight distribution of the vehicle may be altered by the addition of ballast, which must be positioned within the body shell or bumpers, firmly secured and not visible or protruding.

11.8.4. Ballast must not be varied during an event.

11.8.5. The fitting of sump, chassis and exhaust under body guards is permitted.

11.8.6. External mirrors may be removed.

Engine

11.9. Engine tuning is Permitted within the following limitations:

11.9.1. The cylinder head and block must remain as originally supplied by the manufacturer as standard for that model.

11.9.2. If the Class structure suggested in 11.1 to 11.5 is used, carburettors, inlet and exhaust manifolds must remain as originally supplied by the manufacturer as standard for that model (except for Classes 2, 3 & 4).

11.9.3. Fuel injection and/or forced induction are prohibited unless offered by the manufacturer as standard or optional equipment for that model.

11.9.4. The stroke of the crankshaft may not be altered.

11.9.5. Cylinders may be re-bored to a maximum of +0.060in.

Brakes

11.10. Vehicles must not have separate braking of individual driven wheels (fiddle brakes) but it is permitted to increase the braking power of the vehicle.

Springs and Shock Absorbers

11.11. Spring and shock absorber mounting points must be retained unaltered, though the springs and shock absorbers themselves may be changed and anti-roll bars and anti-tramp bars added.

Wheel and Tyres

11.12. It is permitted to replace standard wheels provided they can be fitted without altering the hubs or anything attached to them.

11.12.5. Tyre sizes and aspect ratios are free, providing they are compatible with Construction and Use Regulations for the vehicle concerned.

11.12.6. Use of the following tyres is prohibited:

(a) those having any of the following patterns, inscriptions or manufacturers' designations: 'All Seasons', 'Grip', 'Snow', 'Special Use', 'Town & Country', 'Mud & Snow', 'M+S', 'M.S.', 'M&S' or the Three Peaks Mountain Snowflake symbol;

(b) those constructed primarily for off-road use;

(c) those having additional grooves intentionally cut into the tread pattern [post manufacture].

(d) Goodyear All Weather Steel Radial, Goodyear Vector, Pirelli P7, Michelin XRN or Uniband Rally Steel.

11.12.6.1. Tyres must comply with regulation L2.1.

11.12.7. Spare wheels and tyres must be carried in the same numbers and mounting position(s) as provided by the manufacturer.

11.12.8. On the driven wheels only, use minimum tyre pressures as specified in the SRs.

Transmission

11.13. If the Class structure suggested in 11.1 to 11.5 is used, only gear and axle ratios as stated in the Official manufacturer's handbook for the model and year of manufacture can be used, except for vehicles in Class 4.

11.13.1. Where components are changed to alter gear ratios as provided for above, they must be readily interchangeable and from the same car manufacturer.

Miscellaneous

11.14. All vehicles must:

11.14.1. Have bumpers fitted, when originally supplied for the vehicle

11.14.2. Be allowed to use proprietary accessories available for the vehicle

11.14.3. Not use alloy or plastic panels unless fitted as original equipment

11.14.4. If the Class structure recommended in 11.1 to 11.5 is used, rear seats must be fitted in the same way as originally supplied (except in Class 4).

National Trials Car Formula

12.1. The National Trials Car Formula involves four wheel vehicles complying with all Technical Regulations except J.5.2.2, J.5.2.3,J.5.2.4,J.5.2.6,J.5.20.4,J.5.20.6,J.5.20.7,J.5.20.8,J.5.20.9, 9.1 and 9.8 and Period Vehicle Waivers. Vehicles can be divided into two classes, up to 850cc and over 850cc up to 1650cc.

Safety

12.2. Safety Criteria K.8 is mandatory. The switch must be located on the off side rear of the car and be rearward facing. See Drawing 12.2. K.1.6.4(b) is recommended.

Chassis

12.3. Chassis construction is free, but permitted wheelbase and width dimensions are shown in the Appendix 1, Chart 12.3.

12.3.1. Vehicle engines must be located with the centre of the foremost original manufacturer's sparking plug orifice not more than one-fifth of the wheelbase behind the centre line of the front wheel hubs where the only operative water radiator is mounted in front of the engine, or one-eighth if no radiator is fitted in front of the engine (tolerance 1cm).

Body

12.4. The bodywork must be of adequate strength and proper construction to provide a compartment for Driver and Passenger. It must meet the following criteria:

12.4.1. The front and rear overhangs must be as specified in the Chart 12.3.

12.4.2. It must be equipped with fixed seats for a Driver and one adult Passenger, and have seat backs not less than 30.5cm measured from the uncompressed base seat cushions along the angle of the seat back.

12.4.3. The rearmost portion of the seats (without cushions) at this 30.5cm height must not be behind a line through the vertical axis of the rear hubs.

12.4.4. All Passenger handles must be of rigid construction, securely anchored and neither flexible nor adjustable.

12.4.5. No handle must be capable of touching the ground in the event of a roll-over and all handles must be sited so that in the event of the car hitting a solid object, handles are protected from contact with the object by the chassis.

12.4.6. Any handle forward of the centre line of the rear axle must be fixed in accordance to dimension E as detailed in Chart 12.3.

12.4.7. Rear mudguards must be of adequate strength to protect Driver and Passenger from wheels and tyres.

12.4.8. Rear mudguards must cover the full length of the tyre in plan view at the top of the wheel and must extend outwards to within 5cm of the outside edge of the tyre wall.

12.4.9. Front mudguards must cover the full width of the tyre over an arc of 90° and extend rearward to not more than 10° above the horizontal line through the front hub.

Engine

12.5. Vehicles must use a single four-stroke production car engine not exceeding 1650cc and comply with J.5.4. Modifications are free.

Suspension

12.6. Any form of suspension can be used. For minimum track front and rear details, see Chart 12.3.

Steering

12.7. Any form of connection from steering wheel to the front wheels is permitted.

12.7.1. The position of the two swivel axes must not vary whilst steering.

12.7.2. Four-wheel steering is not permitted.

Brakes

12.8. Vehicles must be fitted with operative and effective front and rear brakes.

12.8.1. Independent rear braking is permitted, but no self-compensating controls are permitted on the rear brakes, which must be single leading-shoe drum brakes or disc brakes.

Wheels and Tyres

12.9. Wheel rims must not exceed a width of 11.43cm (4.5in) measured between the bead flanges, nor a diameter of 15in for driven wheels.

12.9.1. Tyre security devices are permitted in the rims.

12.9.2. Wheels should not carry any chains, spikes or non-skid attachments.

12.9.3. Tyres must be of a maximum size 165x15 on driving wheels and must be selected from Tyre List III (Section L). Vehicles fitted with tyres that have previously been included in Tyre List III may compete for class awards only and may not be included in the overall classification.

12.9.4. Vehicles must carry one spare only, which must be a driving wheel as fitted on the car, fitted with any listed tyre. It is not permitted to add ballast to the spare wheel.

12.9.5. Motorcycle tyres on non-driving wheels are permitted.

12.9.6. Minimum tyre pressure 2psi.

Transmissions

12.10. Vehicles must be equipped with a differential gear which divides torque equally between the driving wheels.

12.10.1. Vehicles should not use any locked or lockable torque biasing or limited slip differentials, or any other automatic device which is designed to achieve the same result.

12.10.2. Any clutch/torque converter attached to the engine flywheel must be bolted directly to the engine crankshaft.

12.10.3. Gearboxes and transmissions with a sequential shift are prohibited.

Weight

12.11. Free.

Miscellaneous

12.12. Vehicles can have a starter motor mounted on either engine block or clutch cover and must comply with the silencing levels specified in J.5.17.

12.12.1. All measurements must be in accordance with these regulations when the car is unladen on a level horizontal surface.

750 Motor Club Trials Formula

13.1. Full details of this Formula are available from the 750 Motor Club Ltd, The Conservatory Suite, Donington Park, Castle Donington, Derby DE74 2RP. Tel: 01332 814548.

HST Car Formula

14. Cars must be prepared in the spirit of the period. The organisers of a historic sporting trial reserve the right to disqualify any car that has a specification, component or modification (other than permitted specification modifications) that would not have been used in period. In all cases the onus of proving a specification, component or modification as being in period rests with the competitor who must submit the required documentary evidence.

HSTA Car Formula

14.1. The Historic sporting Trials Car Formula involves four wheel vehicles complying with all Technical Regulations except J5.2.2, J5.2.3, J5.2.4, J5.2.6, J5.20.4, J5.20.6, J5.20.7, J5.20.8, J5.20.9, 9.1, and 9.8 including Period Vehicle Waivers (E to G) and Regulations 12 except 12.3, 12.4.6, 12.5, 12.6, 12.7, 12.9 and 12.9.3 but including 12.3.1.

In the following regulations, the term "Ford Sidevalve" refers to components from the following models: E04A, E494A, E4930A/B, E93A, E493A, E83W, 100E and 103E. The term "period" refers to the Historic Class for cars manufactured between 1/1/1931-31/12/70 and for cars in the Post Historic class those manufactured between 1/1/1971 – 31/12/1978.

Classes

Vehicles will be divided into two classes, Historic (1/1/1931 – 31/12/1970) and Post-Historic (1/1/1971 – 31/12/1978) according to their technical construction in the following regulations.

Chassis

14.2. Must be of period design, constructed of steel tube and complying with the wheel base and track dimensions shown in Appendix 1 Chart 12.3.

Body

14.3. The chassis must be covered by an open body of period design constructed from Aluminium, Steel or Fibreglass.

Engine

14.4. Only the following engines are permitted:

Historic Class: Ford Sidevalve, BMC A Series up to 948cc, Austin 7, Reliant 600/700/750 OHV, Reliant 750 Sidevalve. A Maximum of 60 thou overbore is permitted, the stoke must be standard and the camshaft and valves must be in original position.

Post-Historic Class: Engines which were used in period to a maximum of 1650cc.

14.4.1. At least one period European Carburettor must be fitted and in operation.

14.4.2. Forced induction is not permitted unless originally fitted to the vehicle.

14.4.3. Ignition systems must use a period distributor but the use of a contact breaker is not mandatory. Ignition mapping or any form or engine management system is not permitted.

Suspension

14.5. Historic Class vehicles must use transverse leaf front suspension unless the vehicle was manufactured in period using coil over dampers with the lower mountings on or close to the king pins. Otherwise, vehicles must be fitted with period leaf or coil spring systems. Only steel bodied dampers are permitted. Gas, remote reservoir or double adjustable dampers are not permitted. Independent suspension is not permitted.

Front Axle

14.6. Historic class vehicles must be fitted with the front axle beam from an Austin 7 or Ford Sidevalve. Post Historic Class vehicles must be fitted with a steel front axle beam of period design. Cars in the Historic class must use a period steering box.

Brakes

14.7. Disc brakes are not permitted.

Wheels and Tyres

14.8.1. In Historic Class a control tyre specified in SRs must be used on the driving wheels. Front wheels must bolt onto the brake/hub.

14.8.2. In Post Historic rear wheels must comply with T12.9 and the tyre on the driving wheels must be selected from current or previous versions of Tyre List III or be of both cross-ply construction and 16-18" in diameter.

Gearbox

14.9. Historic class vehicles must be fitted with a gearbox from a series production car of period. The casing and gear ratio may not be modified other than the fitment of a Ford 100E input shaft to a Ford 8 gearbox. The gearbox must be bolted directly to the engine.

Rear Axle

14.10. Vehicles must use a live rear axle from a period series production car.

Miscellaneous

14.11. Fuel must be Gasoline/Petrol, as defined in Nomenclature and Definitions.

14.11.1. The lowest overall forward gear ratio is 23:1.

14.11.2. There is no minimum weight.

14.11.3. No ballast may be carried.

14.11.4. Electric Water Pumps and cooling fans are permitted.

14.11.5. The fitting of a generator is optional.

Appendix 1: Charts and Drawings

Chart 12.3

National Trials Car Formula dimensions (in mm) for Under and Over 850cc Classes.

		Class	
		Under 850cc	*Over 850cc*
A	Minimum wheelbase	1905	1981
B	Minimum front track measured on C/L of tyre's contact patch	1117	1117
C	Minimum rear track measured on C/L of tyre's contact patch	1117	1117
D	Minimum cockpit width	813	813
E	Minimum to Passenger handle	635	635
F	Maximum front axle to no. 1 plug (tolerance 10mm)	1/5 of wheelbase	1/5 of wheelbase
G	Maximum rear overhang	1/3 of wheelbase	1/3 of wheelbase
H	Minimum height side to seat	152	152
J	Minimum seat back height	305	305
K	Minimum front mudguard arc	90°	90°
L	Maximum rear mudguard from tyre edge	51	51

Note ① Radiator in front of engine, if water-cooled.

NATIONAL TRIALS CAR FORMULA DIMENSIONS

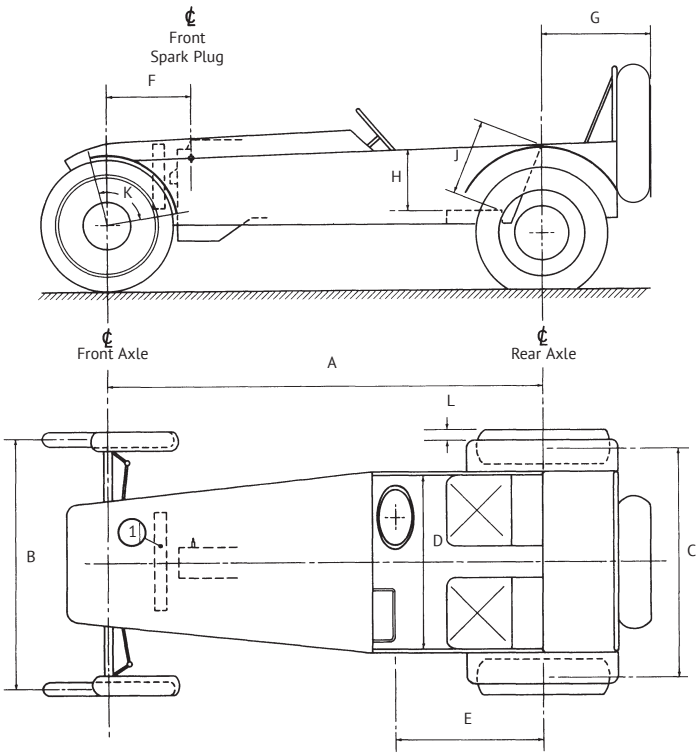

Drawing number 6

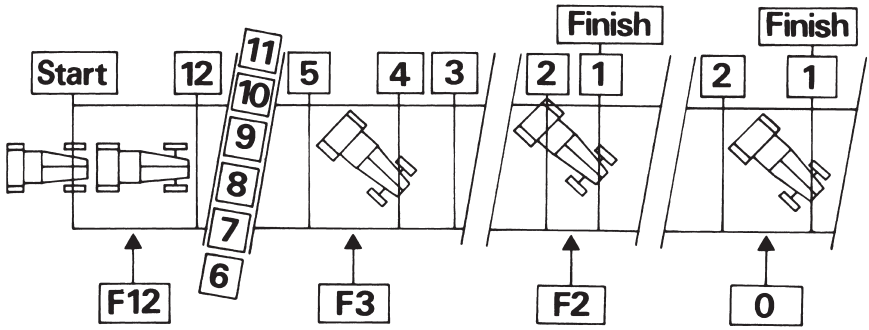

Diagram illustrating the application of 6. The lower figures preceded by F indicate the correct penalties for a car stopping in the position shown.

Drawing number 12.2

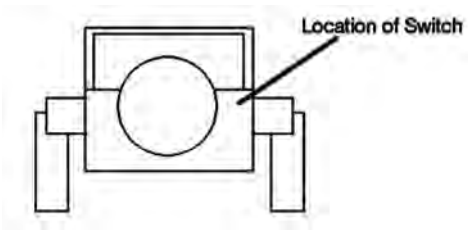

Specific Regulations for Karting (U)

(U) Karting

Nomenclature and Definitions – Karting

This section of nomenclature and definitions must be read in conjunction with those given in section B of this publication.

Kart. A small four wheel racing vehicle with a rigid frame and no suspension of the wheels. The engine(s) drive the rear wheels only and these rear wheels must be joined by a single piece rear axle with no differential action between them. The Driver will be seated with feet to the fore.

Kart Class. A category within which Kart racing takes place defined by the engine or some other means.

Region. A grouping of individual Kart Clubs as recognised for the time being by Motorsport UK Kart Committee.

Standard Club Meeting. Is that meeting which is run on the Club's monthly set schedule, which forms a round of the Club Championship.

Organisers' Regulations

1.1. Kart Race Meetings may only be organised by clubs registered as Kart Clubs by Motorsport UK.

1.1.1. A Permit for any Kart event is issued at the sole discretion of the Motorsport UK, and is subject to the circuit having a valid Track Licence.

1.1.2. A maximum of one International or Motorsport UK Championship event permit for gearbox and one for non-gearbox karts can be issued on the same weekend.

1.1.3. Organisers must adhere strictly to the Class designations listed in the Motorsport UK Yearbook or Motorsport UK Karting Yearbook and must not in any way modify the title or Classes, or permit the use of unauthorised engines, unless given specific permission by Motorsport UK.

1.1.4. Full details of all approved classes are contained in the current Motorsport UK Karting Yearbook.

1.1.5. Parade/Demonstration

Application may be made for an extension to an Organising Permit to enable a demonstration in line with specific criteria, available upon request from Motorsport UK.

1.1.5.1. Historic Karting. Application may be made to utilise the provisions of the CIK-FIA ClasCIK Karting Guidelines. Motorsport UK may, as detailed below, amend the Guidelines. This does not permit anyone to organise racing events for historic karts under Permit by Motorsport UK.

Motorsport UK may authorise:

(i) Single-Kart parade

(ii) Multi-Kart demonstration

(iii) **Eligible Drivers**

The Driver must reach the following birthday during the calendar year

- 13 years old for a category with a cylinder capacity up to 100cc*
- 16 years old for a category with a cylinder capacity up to 210cc
- 18 years old for any category with a cylinder capacity over 210cc.

* with a restrictor

1.1.5.2. Classic Karting. Motorsport UK may permit an extension to the period specifications of the CIK-FIA ClasCIK Karting Guidelines for Classic Karts 1984 to 1997. Eligible drivers in accordance with 1.1.5.1.(iii).

New Kart Classes

1.2. The acceptance by Motorsport UK of any new Junior or Senior non-gearbox Kart Class is subject to the proposed Class being currently certified under Motorsport UK Kart Class Homologation Regulations, which are available from the Technical Department of Motorsport UK.

1.2.1. New Junior or Senior non-gearbox Kart Classes will only be homologated at three yearly intervals, the next period commencing 01.01.2021. Applications for new Junior or Senior non-gearbox Kart Class homologations must be made in writing to Motorsport UK by no later than 31st March of the year preceding the next period.

1.2.2. Exceptionally any CIK recognised and/or homologated Class may be introduced by Motorsport UK at any time.

1.2.3. Only one non-gearbox Kart Class per Kart Category will be permitted from any single manufacturer.

Specific Types of Kart Race

1.3. An Endurance Kart Race is a Kart Race of a minimum of 60 minutes duration, where the need to refuel and/or make drivers stops, or changes, is an integral part of the race. Drivers must have reached their 16th birthday. A group of licensed drivers may be referred to collectively by their team name without the requirement to hold an Entrants Licence.

There are two types of Endurance Kart events which require different licence grades:

1.3.1. Engines which do not exceed 15hp in total per kart, drivers must hold a minimum of a Kart Clubman Licence.

1.3.2. For engines exceeding 15hp in total per kart, drivers must hold a minimum of a Kart Interclub licence.

Note: Throughout these sections an asterisk(*) indicates a requirement for additional information to be printed in the Supplementary Regulations (SRs). Text shown in Italics indicate a Regulation which may be amended in the SRs. Text shown in red indicates a new or amended regulation for 2022.

1.4. A Kart Clubman Event is a Kart event run primarily as entry level Karting, Competitors must hold the minimum of a Kart Clubman Licence.

1.5. Senior Kart Clubman. For 16 year olds and over. Engines may not exceed 17hp in total per Kart.

1.6. Junior Kart Clubman. For 11 to 16 year olds. Engines may not exceed 10hp in total per Kart.

1.7. Bambino Event (15.6). Time Trial: Pre-Race training, which can only be held on circuits specifically licensed for Bambino. Drivers must hold a Kart Clubman (Bambino) Licence, which they can obtain from their 6th birthday and may continue in Bambino until the 31st December in the year of their 8th birthday. Full details and criteria are contained within the Motorsport UK Karting Yearbook.

1.7.1. Race: A Bambino Race may only be held on circuits specifically licensed for Bambino Racing subject to the following:

(a) Drivers must be at least 6 years of age.

(b) Drivers must have satisfactorily completed an ARKS test.

(c) Drivers must hold a Kart Interclub (Bambino) licence.

(d) The meeting format must only provide for timed qualifying, heats and final(s).

1.7.1.1. Deleted.

1.7.2. Kart Teams are prohibited from involvement in Bambino time trials or race events. A Team is a commercial race company or racing team hosting drivers in providing race services or covered accommodation and receiving financial gain where the principal is not also the PG Entrant licence holder.

Circuits

2.1. A plan of the track of a scale at least 1:500, together with a Track Data Sheet, must be lodged with Motorsport UK in conjunction with the issue of any Track Licence.

2.1.1. A new application for a Kart Track Licence must be made at least ten weeks before any proposed meeting.

2.1.2. If the Organiser is a new club, its first three meetings after being granted a Track Licence must be restricted to its own Club members subject to Motorsport UK observation.

2.1.3. Track Licences for new Short Circuits must conform to CIK/FIA Regulations and will only be granted after Motorsport UK inspection.

2.2. Licences will be graded as follows:

2.2.1. Suitable for all status meetings up to and including International.

2.2.2. Suitable for all status meetings up to and including National.

2.2.3. Suitable for Interclub meetings only.

2.2.4. If a Long Circuit track incorporates a Short Circuit, the Circuits will be subject to individual grading and Track Licences.

2.2.5. Suitable for Bambino events. A specific endorsement must be detailed on the track licence to permit these events.

2.3. Existing Track Licences will be graded as above by an inspection.

Circuit Categories

2.4. There are five categories of track for Kart racing:

2.4.1. Kart Permanent Tracks with a lap distance of less than 1500m, where the shape can be determined at any time and all protective barriers are permanently in position.

2.4.2. Kart Temporary Tracks with a lap distance less than 1500m, where barriers are not permanently positioned.

2.4.3. Round the Houses Tracks using public roads or passing through residential areas or so classified by Motorsport UK.

2.4.4. Long Circuits Any Kart circuit, other than 2.4.3, exceeding 1500m in lap distance and all licensed Motor Race Circuits.

2.4.5. Indoor Kart Tracks.

Circuit Regulations

2.5. All tracks shall comply with the following conditions:

2.5.1. Minimum width 6m.

2.5.2. Chicanes are not encouraged but when essential they must be approved by Motorsport UK.

2.5.3. The surface must be regular throughout the length of the track, i.e. sealed or unsealed, durable and well graded, and free of holes, rough spots or loose particles.

2.5.4. All obstacles to a Kart leaving the track, such as poles, ditches, etc. must be adequately protected.

2.5.5. The track edges must be marked in a Motorsport UK approved manner.

2.5.6. Half tyres set in the ground are not permitted, and there must be no drop between the edge of the track and the verge.

2.5.7. Any marker must be of a size and weight that will not constitute a hazard.

2.6. If used, tyres should be secured into columns of at least three tyres height, all of the same diameter.

2.6.1. Each column of tyres should be bolted as per Motorsport UK specification or secured by any other means approved by Motorsport UK.

2.6.2. Free-standing tyre walls should be formed by securing each column to its neighbour to make up units of at least three columns length.

2.7. Where alternative routes on the same track may be used, those not in use must be clearly marked by bollards or marker boards.

2.7.1. Painted lines on the track surface are not sufficient.

2.8. Any area which may at any time during practice or racing contain people other than members of the organising staff, or Competitors taking part in an event, should be protected from the track and from any area where Karts are in motion by a physical barrier.

2.8.1. This barrier must be permanent with a continuous, smooth, vertical face of at least 1m in height on the track side.

2.8.2. The barrier must be incapable of deflection away from the track if struck by a Kart travelling at the maximum speed likely to be achieved at that portion of the track.

2.8.3. If the barrier is used to contain people in an enclosure, it must be sited not less than 3m from the edge of the track.

2.8.4. On a bend or corner, if the barrier is less than 10m from the edge of the track, there should be a post and rope fence, keeping spectators a further 1m behind the barrier.

2.8.5. Unless otherwise authorised by Motorsport UK, no spectator may be within 3m of the edge of a track on a straight, or within 8m on a bend.

2.8.6. Greater safeguards may be required if an area is considered hazardous, or in the vicinity of Karts travelling at high speeds. In all cases, the maximum possible space must be allowed in head-on situations and through any corner.

2.8.7. Energy absorbing protection of either tyre stacks, straw bales or other Motorsport UK-approved material should be placed in front of the ultimate barrier in head-on situations.

2.8.8. No variation of barriers/enclosures from that specified in the Track Licence will be permitted unless specifically approved by Motorsport UK.

2.8.9. Access to all enclosures and to the track itself should only be by means of controlled entrances.

2.9. Temporary tracks will be subject to Motorsport UK approval and must conform in all ways to the Track Licence issued.

2.10. The maximum number of starters will be calculated as follows, unless otherwise stated on the Track Licence.

Track width	*Class*	*Max starters*
Min. width 6m	Non Gearbox	4 per 100m, max 24
	Gearbox	3 per 100m, max 18
	250 Int	3 per 100m, max 18
Min. width 7m	Non Gearbox	5 per 100m, max 34
	Gearbox	4 per 100m, max 30
	250 Int	4 per 100m, max 23

2.10.1. Specific criteria will be determined for endurance races and Bambino events as defined by Motorsport UK.

2.10.2. The grid for a standing start should be laid out so that there is at least 4m between the fronts of each row.

The grid formations will be:

Track width (metres)	*Max starters*
6 to 8	2 x 2 x 2 max
8 to 9	3 x 2 x 3 max
9 to 12	4 x 3 x 4 max
Over 12	5 x 4 x 5 max

(If approved by Motorsport UK)

2.10.3. Where licensed motor racing circuits are used, spectators must be confined to the normal spectator enclosures.

2.10.4. Safety precautions must be those approved by Motorsport UK for Kart Meetings at that circuit.

2.10.5. Long Circuit races will use slow rolling starts with formations as in 2.10.2.

2.10.6. The number of starters at long circuits will be determined by Motorsport UK.

Equipment

3.1. The following minimum equipment is mandatory for all Kart meetings:

3.1.1. Warning notices, tickets, armbands, etc, as specified in D.31.1.

3.1.2. Flags as detailed in 6.1.4 and Q.12.24.3.

3.1.3. Fire extinguishers (minimum 2kg dry powder) with a manufacturer's or agent's certificate issued prior to the season's racing to the effect that they are in working order. As a minimum, one must be available at the start line, two in the paddock in clearly visible positions, and one at each Marshal Post.

3.1.4. Track cleaning equipment comprising two units of:

(a) One ordinary shovel.

(b) Two brooms.

(c) A metal container of 3kg of a suitable cleansing agent for removing oil.

3.1.5. A public address system available to the Clerk of the Course (a hand-held powered megaphone is acceptable as a minimum) for communicating with Competitors

3.1.6. A Starter's Sheet and an Officials' signing-on-sheet in the control of the Secretary of the Meeting

3.1.7. An Official Notice Board, prominently sited in the paddock or at Race Control for all Official communications, grid positions and race results

3.1.8. Certified scales and/or 100kg of certified check weights

3.1.9. A calibrated noise meter, microphone and accessories.

3.1.10. A Small Spill Kit is to be provided in all paddock areas.

3.1.11. At Motor Race Circuits, equipment must be to a similar standard as that required for a car race meeting.

Officials

4.1. Any club organising a Karting event must appoint the Officials listed below and brief them fully prior to the meeting (G.13.1).

4.1.1. All Officials must sign on before commencing their duties.

4.1.2. In carrying out their duties Officials must not expose themselves to any unnecessary hazard. (See Section G.)

4.1.2.1. Any Official trackside must wear enhanced visibility clothing whilst High Visibility is strongly recommended.

Clerk of the Course

4.2. The duties of the Clerk of the Course, who must hold a licence valid for the grade of the meeting, are specified in 21 and G.5.

4.2.1. A Clerk of the Course will normally have only one Deputy at any meeting.

4.2.2. Details of the upgrading procedure for Kart Clerks of the Course are given in Section G.23.

4.2.3. The Clerk of the Course will also be responsible for observing all Competitors at any events where the Stewards of the Meeting are responsible for all judicial duties, and, if satisfied with their competence, signing their licences.

Medical Organisation

4.3. All International Permit and Long Circuits events must have at least one doctor and two ambulances in attendance.

PUBLICATIONS, TECHNICAL PAPERS & CLUB EQUIPMENT

Subject to their availability the products and their prices listed below are correct at the time of going to press, but may be changed without further notice.

PUBLICATIONS (VAT zero rated)

Motorsport UK Yearbook £35.00
Motorsport UK Karting Yearbook £19.00

CLUB EQUIPMENT (VAT standard rated incl.)

Club Membership cards ..... 200 for £28.00
Signing-On Sheets – Competitors/Officials ..... FOC available on website
Signing-On Sheets – Media ..... FOC available on website
"Prohibited Area" rigid PVC warning signs ..... per pack of 5 £60.00
"Motor Sports Can Be Dangerous" rigid PVC warning sign ..... per pack of 5 £60.00

COMPETITORS EQUIPMENT (VAT standard rated incl.)

Motorsport UK Helmet Approval Sticker £2.50
Motorsport UK FHR Approval Sticker £2.50

TECHNICAL PAPERS (VAT zero rated, except † = standard rate)

Motorsport UK Rollcage Certificate – Official Copy ..... ‡each £30.00
Motorsport UK Historic Rally Vehicle Identity Form Registration ..... ‡£100.00
Motorsport UK Vehicle Passport (payable to Inspecting Scrutineer) £45.00
FIA Historic Technical Passport Application (excluding Registrars Fee) ... *‡each £408.00
FIA Current Homologation Papers for any UK car ..... ‡each £56.00
FIA Current Homologation Papers for any non UK car ..... ‡Price on application
FIA Lapsed Homologation Papers ..... ‡each £47.00
FIA Lapsed Homologation Papers for pre-1995 cars ..... ‡each £32.00

‡ Overseas orders are subject to an additional delivery charge.
* Excluding FIA fee.

For the above items, please address order(s) to:

Sales Team, Motorsport UK, Bicester OX27 8FY

Purchase online from www.motorsportuk.org

4.3.1. One ambulance must be equipped with portable resuscitation equipment and a crew trained in its use

4.3.2. It is recommended that a fast rescue car is also available for all Long Circuit meetings.

4.4. At all other events a local authority, St John, Red Cross or other approved ambulance, equipped to a suitable standard and including a portable resuscitation unit with crew trained in its use, must be in attendance at all times.

4.4.1. A doctor or Motorsport UK-registered Paramedic (F.7.3.1) must be present throughout practice and racing.

4.4.2. It is recommended that if entries exceed 100, or for Motorsport UK Championship events, there should be two ambulances present, or one ambulance and a fully equipped medical centre (F.6.4).

4.4.3. If only one ambulance is present and it has to leave the circuit, racing must not continue until it returns, unless alternative suitable transport approved, by the doctor or the chief medical representative, is present and available with sufficient trained staff to man it.

Kart Scrutineer

4.5. The Chief Kart Scrutineer must hold a licence (minimum National grade) valid for the grade of meeting. Licence grades are shown in G.28.

Marshals

4.6. The Clerk of the Course must ensure that responsible persons are appointed as Flag, Track and Paddock Marshals, and that they are fully briefed as to their duties.

4.6.1. All Marshals' posts, as detailed on the Track Plan, must be fully manned and equipped. Trackside posts must be properly protected and Flag Marshals must remain within the confines of that protection.

Flag Marshals

4.6.2. Flag Marshals are responsible for signalling to Competitors and warning them of hazards.

4.6.3. They should not leave their posts to render assistance in the case of an incident.

Course Marshals

4.7. Course Marshals are responsible to the Clerk of the Course for ensuring:

4.7.1. The track surface, markings and protective works are maintained in good order throughout a meeting.

4.7.2. Where alternative routes on circuits exist, they should ensure those not being used are properly indicated

4.7.3. The fire fighting equipment is readily available and correctly sited and that they are familiar with its operation

4.7.4. The track cleaning units are sited at suitable points

4.7.5. Proper supervision of the removal from the track of any Kart which may have stopped on or adjacent to the track

4.7.6. All entrances to the track are manned and that no unauthorised person comes within this area.

4.7.7. If enclosures are not surrounded by fencing, Course Marshals must be stationed at intervals between all enclosures and the track.

Paddock Marshals

4.8. Paddock Marshals must:

4.8.1. Maintain orderly conduct in the paddock and/or pit area. Notify Competitors of their starting positions

4.8.2. Assemble Competitors prior to a race.

4.8.3. Ensure that no competing vehicle goes onto the track until it has been approved by the Scrutineers.

4.8.4. Exclude from the paddock any unauthorised persons.

Secretary of the Meeting

4.9. The Secretary's duties are detailed in G.3.

Stewards

4.10. The organising club is responsible for the appointment of two Event Stewards, whose duties are detailed in 21 and G.2.

4.10.1. The Motorsport UK will also appoint a Steward (whose duties are also detailed in G.2 and 21) who will also be responsible for observing all Competitors (including novices), where the Clerk of the Course is responsible for all judicial duties, and, if satisfied with their competence, signing their licences.

4.10.2. Attention is drawn to G.1.

Lap Scoring and Timing

5.1. Manual lap scoring must be carried out at all meetings. Exceptionally where transponder timing takes place, a working stand-alone camera system under the direct control of the Chief Timekeeper for the purposes of lap scoring may be used.

5.1.1. Where there is no transponder timing the Chief Lap Scorer must be nominated as a Judge of Fact in relation to race finishing order.

5.2. *Where timing takes place, there must be a Chief Timekeeper who must hold a licence valid for the grade of meeting detailed in G Table No. 6. Where timing takes place to an accuracy of 0.001 seconds the Chief Timekeeper must be of Kart National grade.

5.3. If using a light beam, timing must be to an accuracy of not less than 0.001 seconds and the equipment must be certified in accordance with G.29.12.

5.3.1. Transponder timing at Short Circuit Kart events must not be to an accuracy of less than 0.01 seconds.

5.3.2. Transponders must be from the Motorsport UK-approved list and used in conjunction with decoders certified in accordance with G.29.12.

5.3.3. The fitment of the transponder must be in accordance with the manufacturer's instructions at a predetermined position on the kart, as detailed in the SRs.

Signals

6.1. Red lights are mandatory for the starting signal.

6.1.1. The National Flag should only be used as a starting signal if the lights fail.

6.1.2. For a rolling start, vehicles start at the moment flag is raised.

6.1.3. For a standing start they start at the moment the flag is dropped.

6.1.4. A Green flag with Yellow chevron indicates a false start (see Section Q for flag signals).

6.2. A Yellow/Black quartered flag may be introduced by the Clerk of the Course at Short Circuit Kart Race meetings.

6.2.1. The flag will be waved and first be displayed at the start/finish line and then will flow around the circuit in both directions, as an adjacent post displays their waved flag.

6.2.2. Upon display of the Yellow/Black quartered flag all Karts must slow down to a steady pace (as on a rolling start) and must line up in order behind the leader who will act as the pace setter.

6.2.3. No overtaking is Permitted.

6.2.4. The field will remain in close formation, at reduced speed, for as long as it takes to clear the obstruction or remove the hazard.

6.2.5. Competitors who fail to slow down sufficiently or who overtake under the Yellow/Black flag may be disqualified or otherwise penalised.

6.2.6. When the Clerk of the Course is satisfied that the problem is resolved, the. race will be resumed by the display of a Green Flag at the start/finish line and the simultaneous withdrawal of all Yellow/Black flags around the circuit. Overtaking remains strictly forbidden until having passed the green flag on the start and finish line.

6.3. *Yellow flags.*

6.3.1. A stationary Yellow flag may be introduced: Danger, slow down sufficiently to ensure that full control of the vehicle can be retained. No overtaking.

6.3.2. Yellow flag – Waved: Great danger. Slow down considerably. Be prepared to suddenly change from the projected racing line, or take other evasive action including stopping if necessary. No overtaking. (This signal may be supplemented by flashing yellow light(s), as an added warning).

Race Procedure

7.1. The Clerk of the Course may permit a change of make of chassis or engine from those nominated on an entry form, provided application is made in writing before the end of scrutineering.

7.1.1. Only a Driver using a scrutineered engine/chassis who has completed a minimum of three laps practice at racing speeds within the Official practice period will be permitted to race.

7.1.2. Only one chassis may be used except when a second chassis is permitted in the SRs.

7.1.3. The maximum number of engines which may be used during a meeting is two, unless specifically varied in the SRs.

7.1.4. Changing the crankcase constitutes a change of engine.

7.1.5. Unless otherwise stated in SR's the Starter shall be deemed as a Judge of Fact in respect of Race Starts.

7.2. The number practising at any time shall not exceed the maximum permitted on the track for a race.

7.2.1. Adequate practice periods must be allotted to all classes, which must include sufficient time for Competitors requiring observation to be seen.

7.2.2. Where possible, novice and experienced Drivers should be allocated separate sessions.

7.2.3. Exceptionally, for Long Circuits, 120% of the number Permitted to race may practice at a time.

7.2.4. At no time may non-gearbox and gearbox Karts practice or race together.

7.2.5. Due regard must be paid to Driver experience and the relative speed of the karts if different classes are on the track at any one time during practice.

7.3. The course or its features or markings may only be changed between the last practice period and the event itself in exceptional circumstances.

7.3.1. Should it be necessary to make any change following the scheduled practice, an additional period of practice must be arranged.

7.4. The starting order in which Karts shall be arranged will be determined by:

7.4.1. Ballot.

7.4.2. Lap times recorded in practice.

7.4.3. Order of receipt of entry.

7.4.4. Finishing order of a preceding race.

7.4.5. As defined in SRs.

7.4.6. With the exception of Kart Tyro Events where the Kart Tyro guidelines apply, in all races where the grid position is determined by 7.4.1, 7.4.3 or 7.4.5, novice Drivers must occupy the rearmost grid positions. Where timed qualifying is used it shall have the same status as a race.

7.5. The Pole position must be on the side of the track that is on the inside of the first corner after the start, or as otherwise defined on the Track Licence.

7.5.1. The start line will be indicated on the track by a painted white line. Optionally (and recommended) tracks may also use the following markings to aide controlled starts (see illustration Drawing 7.5.1):

(i) Two 2m wide lanes, bordered by white lines will be painted from a point, no more than 100m and no less than 50m leading to the start line.

(ii) A Yellow Line shall be painted 25m prior to the Start Line. For rolling starts, this Yellow Line will also be indicated by soft cones (one cone on each side of the track).

7.5.2. When the Starter is ready for a race, he must signal by raising a Green Flag. A Marshal will then raise a Green Flag which will be the signal for the Karts to be released on to the circuit. After the Marshal has lowered the Green Flag, the entrance to the track will be closed and no further karts will be allowed to join the track.

7.5.3. Karts will form up in the assembly area and will be started when authorised by the Paddock Official after the Green Flag has been shown. Drivers will be under Starter's Orders from the moment that the Green flag is displayed.

7.5.4. Each track will establish a 'Safety Line'. Any Competitor who, having passed that 'Safety Line', receives assistance from anyone other than a signed-on Official may be disqualified from the results.

7.6. Starts for races shall be as shown below. 'Le Mans' or any starts other than those specified below are forbidden.

7.6.1. Deleted.

7.6.2. *Short Circuit events (all classes).* A standing start with engines running, or a rolling start.

7.6.3. *Long Circuit events.* All starts should be slow rolling starts following a formation lap.

7.7. In the case of a rolling start, on display of the Green flag karts will proceed round the course in grid formation at a steady pace to await the starting signal.

7.7.1. The karts may be preceded by an Official pace vehicle.

7.7.2. If there is no pace vehicle the Driver in No.1 position will control the speed.

7.8. When the starter is satisfied that the karts are approaching the start line in correct position and at an acceptable speed, the starting signal will be given by extinguishing the red light (or by raising the National flag should a light failure occur). If a further lap is required the red lights will remain on or the flag will not be raised.

Once the race start has been given drivers can break formation, but should this occur before the lights go out (i.e., drivers leave the corridors, or break formation, with the red lights on (7.5.1.)) then a 'false start' penalty will be applied.

7.8.1. False/Jump Start, Standing Start. A false start occurs when a driver under Starter's orders gains an unfair advantage by either:

(a) being in an incorrect position on the grid, or

(b) moving forward from his prescribed position.

7.8.2. Breaking formation. When a driver, under Starter's orders, in the case of a rolling start, fails to maintain their corridor, or accelerates early or unevenly.

7.8.2.1. The penalty for the driver concerned shall be the addition of 5 seconds (or 3 places where there is no licensed Timekeeper) to the time taken by him to complete the course. This will not incur penalty points.

7.8.3. Where the optional track markings are used (7.5.1) the Clerk of the Course must make reference to their use in the drivers briefing. When used the start signal will not be given before the Yellow Line. The karts approaching the Start Line must remain in formation, at approximately half race speed (which will be set by the pole sitter) and be driven within the set of two metre lines appropriate to their side of the grid. It will be deemed an offence to accelerate in any way before the Yellow Line or drive outside the marked lines.

7.8.4. In the case of a standing start, on display of the Green flag, karts will proceed round the course to the designated start line where a red flag will be shown, and they will stop on their allotted grid markings. No start lights will be illuminated.

(i) Should a kart fall to the back of the field for any reason on the rolling lap and not be in formation at the display of the yellow flags at the corners prior to the start that kart must immediately fall back to and start from the rear of the grid.

(ii) When the starter is satisfied that the karts are in their correct position, he will withdraw the red flag and point to the start lights which will then be illuminated with the red lights (this maybe in a sequence of red lights until they all remain on.)

(iii) Within a period of 5 seconds the red lights will be extinguished to indicate a race start.

(iv) Any movement prior to the red lights being extinguished will be judged as a false start and will be penalised with a minimum of 5 second penalty (or 3 places where there is no licensed Timekeeper).

(v) If the starter is not satisfied, or a driver is unable to take the start he will indicate a false start which means an extra formation lap must be covered.

(a) If a Driver is unable to start, he must remain in his kart and notify his situation by raising his arm.

(b) In this case an additional formation lap may be granted; any drivers who have been unable to start will be allowed to get out of their karts and restart by their own means and once the whole field has passed them.

(c.) They will not be authorised to regain their original position in the formation and will take the start from the rear of the grid in order of arrival. No other driver will be allowed to occupy the place(s) which have remained vacant.

Stopping of a Race

7.9. The Clerk of the Course (or his designated representative) may decide to stop a race or practice at any time. Should a race be stopped by the display of red flags, the following procedures will apply:

7.9.1. Any race stopped before the leader has completed two laps will be declared null and void.

(i) The race will be re-run in its entirety, as per 7.10.

(ii) All available karts will restart from their original grid positions; the grid may be closed up for any missing karts.

(iii) Front fairings may be reset without penalty on the grid.

7.9.1.1. If it becomes necessary to remove all karts from the track, repairs may be made and all karts that came under starter's orders for the original race will be permitted to start the re-run race from the dummy grid in their original positions.

7.9.2. If 2 or more laps but less than 75% of race distance has been completed by the leader, the Clerk of the Course shall, at his discretion, decide to:

(a) Abandon the race. In which case the race (result) shall be declared as the order of finishing on the last full lap completed by all karts proceeding under their own power when the red flag was first displayed, followed in classification by non-running karts on a roll back of laps basis and order of stopping.

OR

(b) Consider the race suspended and run it as a two part race.

(i) In this case the Karts will be restarted in a single file, rolling start with no overtaking before the start line.

(ii) After one or more laps under quarter flags (6.2,) the start will be signified by the waving of the green flag.

(iii) The starting order for the second part of the race shall be the order at the last full lap completed by all karts still proceeding under their own power, when the red flag was first displayed. Any time penalty will be recorded and added to the final result.

(iv) Drivers "one or more lap(s) down" shall be put in their correct position i.e., behind the drivers on the same lap as the leader.

(v) The race distance shall be the number of laps required to make up the full race distance.

(vi) The finishing order of the second part, shall be the finishing order of the race (drivers "one or more lap(s) down" in the first part shall be deemed to have finished the race "one or more lap(s) down" unless they have un-lapped themselves), followed in classification by non-running karts on a roll back of laps basis and order of stopping.

(vii) If the Judge of Fact reports that the front fairing on one or more karts was no longer in the correct position when the race was suspended, in all situations a time penalty of 5 seconds will be imposed automatically on the driver(s) concerned and added to the final result. This is not susceptible to appeal. Any front fairing which is subject to a Judge of Fact report must be reset on the grid before the race is re-started.

7.9.3. If 75% or more of the race distance has been completed by the leader, the race will be deemed to have ended. The race results shall be declared as the order of finishing on the last full lap completed by all karts still proceeding under their own power, before the red flag was displayed, followed in classification by non-running karts on a roll back of laps basis unless Championship Regulations specify otherwise.

Re-Starting Procedures

7.10. If the race is to be re-run in its entirety, or restarted the following procedure will apply:

7.10.1. While the race is stopped, the whole course will be considered as Parc Ferme and no work may be carried out to any kart (except to reset the front fairing in the correct position under the supervision of the Scrutineers).

(i) Mechanics will not be allowed on the circuit until permission is given by the Clerk of the Course.

(ii) Neither the mechanics, nor Incident Marshals already on the circuit, can approach or touch any kart until permission is given.

(iii) When authorised by the Clerk of the Course, spark plugs may be changed and finger adjustments may be made to the carburettor settings.

7.10.2. If a kart leaves the track during the stoppage,

(i) It will not be permitted to rejoin the race.

(ii) Any kart not racing at the time of the incident that caused the race to be stopped, cannot rejoin the re-started race.

(iii) Karts involved in the incident that gave rise to the stoppage, or who subsequently stopped racing because of the incident prior to the red flag, may only re-join the race if the Clerk of the Course, in consultation with the Chief Scrutineer, is satisfied that a kart is safe to continue without repair, and the Chief Medical Officer is satisfied the Competitor is fit to continue racing. These karts must start at the rear, whether the race is run over the full distance or as a two part race.

(iv) Those karts that stopped after the incident that gave rise to the stoppage because they were instructed to do so, or because the track was blocked, may join the restarted race in their proper places.

7.10.3. Deleted.

7.11. For events on Long Circuits and Round the House Circuits the procedure is detailed in Q.12.24.

Race Finish

8.1. After receiving the end of race signals, all karts must proceed directly to the Parc Fermé without stopping, giving or receiving any object whatsoever and without any assistance (except that of Marshals if necessary).

8.1.1. Any classified kart unable to reach the Parc Fermé by its own means will be placed under the control of Marshals who will supervise the movement of the kart to the Parc Fermé.

8.1.2. Attention is drawn to D.18 regarding ineligible entries and Q.12.24 regarding results.

8.1.3. Where timing is not authorised, it is prohibited to publish times or speeds in any practice or race result.

8.1.4. Any other publication or display giving this information must clearly be shown and declared as 'Unofficial' and 'For Information Purposes Only'.

Parc Fermé

9.1. The Parc Fermé shall be sufficiently large and secure so that no unauthorised persons can gain access.

9.1.1. Parc Fermé requirements, where appropriate, will be specified in accordance with D.25.1.18.

9.1.2. Only authorised Officials may enter the Parc Fermé and no intervention of any kind is allowed there unless authorised by such Officials.

9.1.3. When the Parc Fermé is in use, Parc Fermé regulations will also apply in the area between the finishing line and the Parc Fermé entrance.

Fees for Karting

10.1. See Part 3, Appendix 1.

Championships

11.1. No Championship may take place until a Motorsport UK Championship Permit has been issued.

11.1.1. The Notice of Intent and Regulations must be submitted to Motorsport UK in accordance with the timescales laid down in the guidelines of the Kart Championship Control Panel.

11.1.2. Any Championship for which awards, either race by race or as the result of a series of races, include cash or goods in lieu of cash, or in which a sponsor's name or title is used in connection with the title of the Championship or series, will be considered a Commercial Championship and subject to a Registration Fee, which will be individually assessed.

11.1.3. Alternative Championship Rounds - Q7.11. applies.

Competitors' Regulations

12.1. Competitors must report for signing-on and scrutineering at the time specified in the SRs or risk being fined or disqualified.

12.1.1. No kart may be driven in practice or in a race until it has been passed and logged by the Motorsport UK Scrutineer.

12.2. In conjunction with signing-on, the following items must be produced for approval:

12.2.1. Kart Racing Licence of the appropriate grade (14.1).

12.2.2. Club Membership Card (if appropriate) (D.4.3).

12.3. For all events the Clerk of the Course in consultation with the Stewards will designate the race as follows:

12.3.1. DRY – All Competitors shall use dry tyres.

12.3.2. OPEN – Competitors have the choice of tyres (i.e. wet or dry).

12.3.3. WET – All Competitors shall use wet tyres.

12.4. A definition of wet tyres appears in 16.9.4.

12.4.1. At no time may a Kart be fitted with a mixture of wet and dry tyres.

12.4.2. Tyres shall only be those defined in the Class regulations.

12.5. Competitors must obey the flag signals detailed in 6 and Q.12.24.

12.5.1. All karts that take the start by crossing the start line under their own power (7.8) will be classified as a finisher on a roll back of laps basis.

12.5.2. Where the SR's provide, a finisher may have to complete a certain designated percentage of a race in order to be classified as a finisher.

12.5.3. Any Driver leaving the track more than twice, for whatever the reason, may be disqualified from the race (Q.12.21.2 applies).

12.5.4. Where a Driver consistently drives with a wheel off the track or leaves the track, this may be deemed driving in a manner incompatible with general safety and the Driver may be disqualified from the race at the discretion of the Clerk of the Course.

12.5.5. Once a race or practice session has started, karts may only be worked upon in a place of safety.

12.5.6. Refuelling during a race is forbidden, unless Permitted by the SRs.

12.5.7. Any Driver receiving outside assistance, other than by an Official, between coming under starter's orders and the end of the race may be disqualified from the results at the discretion of the Clerk of the Course.

12.5.8. Track regulations in Q.12.21, as appropriate, apply to kart racing.

12.6. All transmission or communication of data, verbal or electronic, between a moving Kart and the Kart's Entrant or team is only allowed in the following circumstances:

12.6.1. If Officially sanctioned cameras and other recording devices and transponders are fitted as required by the Organisers of a specific meeting.

12.6.2. Voice communication in endurance races where SRs specify the use of relevant equipment, which must be appropriately licensed.

12.6.3. A single burst of timing data from the Kart as it passes the receiver.

12.6.4. Where the Competitor has a Motorsport UK approved information system that receives timing data and/or instructions or warnings, which is under the direct control of the Clerk of Course or Chief Timekeeper.

12.7. For Short Circuit Karting only, engines must not be run in the pits or paddock. The Chief Scrutineer may permit a Competitor to start their engine in a designated area only as identified by the Chief Scrutineer.

12.7.1. Deleted.

12.7.2. Deleted.

12.7.3. Deleted.

12.7.4. Deleted.

Clothing

Crash Helmets

13.1. Crash helmets, bearing an MSA/Motorsport UK Approval Sticker, must be worn at all times during training, practice and competition.

13.1.1. The user must ensure that the helmet is to a standard specified in the current Motorsport UK Yearbook, that it fits and is secured properly and that it is in a serviceable condition – see K.10.

13.1.2. Full face helmets are mandatory.

13.1.3. Deleted.

Goggles and Visors (K.11)

13.2. 'Whirley' visors are acceptable when fitted on top of normal visors, but holes must not be cut in normal visors.

Gloves and Suits

13.3. Complete gloves (not mitts or gloves with open backs) and boots (which must cover and protect the ankles) must be worn at all times.

13.3.1. Trailing or loose scarves are not permitted.

13.3.2. For Long Circuit Meetings, all Drivers must wear leather suits or suits approved to EN17092 Class AAA.

13.3.3. For Short Circuits, only leather suits, or suits of a recognised CIK homologation standard (as per 13.4.1), are acceptable.

13.3.4. Leather suits must comply with CIK-FIA regulations and have a minimum thickness of 1.2mm measured at any part of the suit.

13.3.5. All clothing will be securely fastened at wrists, ankle and neck and must be adequate to minimise abrasions.

13.3.6. Drivers may wear two-piece suits providing they are zipped together.

13.3.7. Correctly fitted wet suits, specifically designed for this purpose, may be worn over an approved kart suit.

13.4. Driving suits, helmets, visors etc and all other protective clothing must be presented for inspection by the Scrutineers.

13.4.1. The only acceptable CIK homologated suits are those to standard No. 2001-1 or No. 2013-1, level 1 or 2. Examples of the CIK homologation labels are shown in Appendix 1, Drawing 11.

Kart Licences – See also H22

14.1. Kart Competition Licences (except Kart Clubman licences [1.3]) are issued to Competitors from the age of six. There are five grades:

- Interclub
- National
- International ITG
- International ITF
- International ITE

*Entrant licences will not be issued to persons under 18 years of age.

14.1.1. Retaining and upgrading procedures are given in Section H.19.

14.1.2. A competitor will be considered as a 'Novice' and must use Novice number plates (17.27.4), for Long Circuits Q.11.4.4 applies, until he has obtained six kart race signatures from Motorsport UK Stewards. (Completion of the ARKS Course (H.8.3) will constitute one of the six signatures.) One of these signatures may have been obtained at a NatSKA meeting held under a Motorsport UK Permit. Thereafter he can continue to compete on an Interclub Licence, or can upgrade to a National Licence in accordance with H.19.2 but he will no longer be considered a novice.

14.1.3. A valid licence, must be produced at signing-on at all events (see H.10). For information on Licence validity, see the chart of Minimum Acceptable Licences in Section H.

14.1.4. For Long Circuit

(a) The driver may either produce a Kart licence specifically endorsed valid for Long Circuit Karting or a Car Race licence, see the chart of Minimum Acceptable Licences in Section H.

(b) New competitors must be able to demonstrate that they have either undertaken their ARKS test at a venue licenced for long circuit karting or having taken the short circuit ARKS test must demonstrate their experience to the satisfaction of the Clerk of the Course or an ARKS Instructor during practice at a long circuit kart event. New drivers will be considered as Novices and must carry Novice plates (Q.11.4.4.) until they have received four signatures from the Clerk of the Course for competing successfully on Long Circuits.

(c) Drivers in Division 1 will require the minimum of a Kart National licence.

14.1.5. For competitors under the age of 18 years, a PG Entrant licence is required, H.26.1.9 applies.

Category Restrictions

15. The Category age and weight breaks are given below. Regulations within the Motorsport UK Karting Yearbook may apply further limitations.

Cadet Category

15.1. Category for 8-12 year-olds.

15.1.1. A Competitor may enter the Cadet Category from their 8th birthday, or the year of their 8th birthday having proof of satisfactorily completed at least 3 Motorsport UK Bambino races (not time trial). Drivers may continue in the Category until 31st December in the year of their 12th birthday.

15.1.1.1. Drivers in the year of their 8th birthday, meeting a minimum height of 125cm, having satisfactorily completed 3 Motorsport UK Bambino time trials may move to the Cadet Category and be restricted to a single venue subject to:

(a) Having satisfactorily completed the approved ARKS course ((H.8.3 applies)

(b) The Competition Licence application must be endorsed and submitted to Motorsport UK by the recognised kart club.

(c) The licence will be held by the Motorsport UK kart club and remain valid for their Motorsport UK Permitted Cadet kart races only until the driver has either:

(i) reached their 8th birthday; or

(ii) obtained the Motorsport UK Stewards signature on the upgrade card at a minimum of three InterClub kart races.

15.1.1.2. Once the driver has reached their 8th birthday, they will be eligible to apply for an unrestricted Interclub Kart licence.

15.1.2. Having moved into the Motorsport UK Mini or Junior Category, a Competitor may not revert to Cadet.

15.1.3. Deleted.

Mini Category

15.2. Category for 11-14 year-olds.

15.2.1. A Competitor may enter the Mini Category from their 11th birthday, or the year of their 11th birthday with a National licence, and continue until the 31st December of the year of their 14th birthday.

15.2.2. The minimum driver weight and height and the class weight will be defined in the Class Regulations. All will be within the parameters of the current Class Homologation or Re-Homologation Regulations.

15.2.3. Having moved into the Motorsport UK Senior Category, a Competitor may not revert to Motorsport UK Mini or Junior.

15.2.4. A minimum driver weight is required in the Junior Category. This weight will be defined in Class Regulations and will be within the parameters of the current Class Homologation or Re- Homologation Regulations.

15.2.4.1. Delete.

15.2.4.2. Delete.

Junior Category

15.3. Category for 13 to 16 year-olds.

15.3.1. A Competitor may enter the Junior Category from the year of their 13th birthday and continue until 31st December in the year of their 16th birthday.

15.3.2. They may not however compete in Gearbox Karts until their 13th birthday (subject to individual Class regulations).

15.3.3. Having moved into the Motorsport UK Senior Category, a Competitor may not revert to Motorsport UK Junior.

15.3.4. It may be possible for a Class to span both Mini and Junior Categories, provided that the height and weight requirements of 15.2.2. are met and that the performance remains within the parameters of the Mini Category.

15.3.5. A minimum driver weight is required in the Junior Category. This weight will be defined in Class Regulations and will be within the parameters of the current Class Homologation or Re- Homologation Regulations.

Senior Category

15.4. A Novice (14.1.2) Competitor may transfer to the Senior Category from the year of their 16th birthday. Exceptionally the holder of a Kart National A licence may transfer to a Senior non-gearbox Class from their 15th birthday.

15.4.1. A minimum driver weight is required for any driver below the age of 16 competing in a Senior Category, with the exception of International ITE licence holders. This weight is defined in individual Class Regulations.

CIK Classes

15.5. Motorsport UK may authorise, for CIK Classes only, variations to the ages above subject to further limitations, as per Class Regulations.

Bambino

15.6. Pre-race training and racing (1.7), in accordance with the current Motorsport UK Bambino Karting Regulations, for 6-8 year olds. A competitor may continue in the class until 31st December of the year of their 8th birthday.

Class Safety Exemption

15.7. For the Cadet and Mini categories only, Motorsport UK may in its entire discretion authorise a driver to remain in the category beyond the category maximum permitted age due to that driver's low weight and/or height. Any approved Exemption would allow the driver to compete only at Interclub status meetings with the benefit of that exemption (A2.4).

Technical Regulations

16.1. All Karts must comply with these Technical Regulations.

16.1.1. Modification, addition, variation or tuning other than specifically permitted in these Regulations is prohibited. IF IN DOUBT . . . DON'T. Anyone requiring clarification or definitions concerning the Technical Content of these Regulations should apply in writing to Motorsport UK.

16.1.2. The approval of a vehicle or component is an indication of the acceptance solely for the purpose of these Regulations, and is not to be taken as a guarantee or warranty as to the standard of its design or manufacture, or its fitness or suitability for any use to which it may be put.

16.1.3. In respect of the following regulations the definition of Magnetic Steel is: Structural steel or structural steel alloy meeting the ISO 4948 classifications and the ISO 4949 designations. Alloy Steels having at least one alloy element the mass content of which is ≥5% are forbidden.

Chassis – All Classes

16.2. The Scrutineer must be satisfied that a Kart is safe, is of an adequately strong construction, does not include any temporary components and presents no undue hazard to its Driver or to other Competitors.

16.2.1. In particular, steering, brakes and wheels must be adequate for speeds that are likely to be attained.

16.2.2. Any replacement of original components and fixings must be fit for purpose.

16.3. The chassis frame must be constructed from magnetic steel tubing and be permanently marked with a unique number in an easily accessible position.

16.3.1. Cross-section is free.

16.3.2. It must be of one piece construction, either welded or brazed.

16.3.3. Any form of chassis frame control which includes pivots, dampers or similar devices is prohibited. The addition of bolt-in torsion and/or stiffness bars is specifically permitted subject to Class Regulations.

16.3.4. No additional holes for lightening or any other purpose (with the exception of those required for seat fixing) may be drilled in the chassis tubes.

16.3.5. Only those holes shown in the manufacturer's homologation, or in a manufacturer's Official replacement parts list, will be allowed.

16.3.6. Independent components fitted to protect the underside of the chassis tubes which may make contact with the ground are prohibited unless they are of a non-metallic type and of a design specifically approved by Motorsport UK. (Note: Engine clamps, battery box clamps and brake disc protectors correctly positioned are exempt).

Dimensions (Excluding Cadet and Bambino Classes)

16.4. Wheelbase.

Non-Gearbox, KZ1 and DD2: Minimum 101cm, maximum 107cm, unless specified in Class Regulations.

Gearbox (except as specified above): Minimum 101cm (250cc and above: 106cm), maximum 127cm.

Track – Minimum two-thirds of the wheelbase.

16.4.1. Overall length – Maximum 182cm without a front and/or rear fairing, 188cm for 210 and 250. Gearbox – 210cm including bodywork for all Gearbox when in Long Circuit trim.

16.4.2. Overall width – All classes, unless specified in Class Regulations Maximum 140cm.

16.5. No part of the kart can protrude outside the quadrilateral formed by the front fairing, rear bumper and outer face of the wheels and tyres, nor be higher than 65cm from the ground (except for a structure solely designed as a head-rest).

16.5.1. Deleted.

16.5.2. The use of titanium or magnesium is prohibited.

Flooring

16.6. There must be a floor made from suitably rigid durable material that stretches only from the central strut of the chassis frame to the front of the chassis frame, unless specified in Class Regulations and for Karts in Long Circuit trim when the floor must be at least from the central strut of the chassis frame to the front of the Kart. The minimum thickness of the floor tray must be 1.4mm for metallic, 1.5mm for composite and 3mm for plastic.

16.6.1. The floor tray must be flat, with any deviation allowed upwards, and not downward.

16.6.2. The floor must be edged on each side with a tube or rim to prevent the Driver's feet from sliding off the floor.

16.6.3. If the floor is perforated on the horizontal surface, with the exception of a hole to access the steering column fixing, the holes must not have a diameter of more than 10mm and they must be apart by four times their diameter, as a minimum.

16.6.4. It is permitted to drill additional holes for the specific purpose of mounting such items as pedal heel stops, ballast, censors and fuel tank, provided that the holes are restricted to the minimum size and number required to meet the purpose. They must not cause undue weakening of the floor tray at critical points.

16.6.5. It is permitted to use floor trays with decorative holes or slots so long as they are provided by the manufacturer and that the holes are in the raised sector(s) of the tray.

16.6.6. Mechanical fixings with more than three threads protruding on the underside of the floor tray are not permitted.

Suspension (Nomenclature and Definitions)

16.7. Any method of suspension, either by elastomeric material or by pivots, is prohibited.

Wheels

16.8. The wheels must be equipped with pneumatic tyres (with or without tubes) and the front wheels/hubs must be fitted with rolling element bearings.

16.8.1. Wheels which have been cut and welded are prohibited.

16.8.2. The attachment of the wheels to the axles/hubs must incorporate locking pins or self-locking nuts.

16.8.3. The requirement for wheel retaining locking nuts or secondary locking devices is waived for CIK homologated wheels and their associated fixings.

16.8.4. Hubs with a single retaining bolt feature must not protrude beyond the end of the axle, unless designed for that purpose, and must incorporate a retaining device.

16.8.5. Extended hubs with one or two retaining bolts designed to overhang the end of the axle are Permitted.

16.8.6. Any hub with an overall length (excluding wheel studs) of less than 60mm must not overhang the ends of the rear axle.

16.8.7. No form of hub nave plate is Permitted on the wheel.

16.8.8. For Long Circuits, all wheels must be fitted with some form of bead retention, inside and outside. Bead retention as a minimum is defined as a wheel with a minimum of a 0.5mm raised lip on the inner edges of the tyre housing.

16.8.9. For all gearbox karts both rear outer rims must in all cases incorporate additional bead retention comprising three pegs at equidistant positions. Applicable to wet and dry tyres.

Tyres

16.9. When inflated on the wheel rims, tyres must not exceed a maximum external diameter of 35cm. Minimum external diameter must not be less than 22.2cm.

16.9.1. For certain Classes only Permitted tyres may be used as detailed in the Class Regulations.

16.9.2. All tyres designated for a specific Class must be identical in specification to the samples that have been tested and selected. Control tyres may be held by Motorsport UK as a reference in the event of any dispute.

16.9.3. Tyres must be freely available as single units to the open market in the UK so that customers are not forced to buy either complete sets or other equipment in order to purchase a particular tyre.

16.9.4. To qualify as a wet tyre, tyres must be moulded in such a way as to ensure that grooves are created to leave a minimum of 60% and a maximum of 85% of the total surface area as a raised tread pattern. The grooves must have a minimum depth of 2mm at race start.

16.9.5. Hand cutting of all tyres, and remould tyres, are prohibited.

16.9.6. Heating of tyres, by any method, or their treatment by any chemical substance is prohibited. For the avoidance of doubt, no manner of abnormally raising the temperature of the tyres/wheels above the natural ambient temperature is allowed.

16.9.7. The mechanical removal of accumulated rubber debris is permitted.

16.9.8. The interior of the tyre (space between the rim and the internal part of the tyre) must be filled only with air or nitrogen (J.5.9.6).

16.9.9. For all gearbox karts, valve caps must be fitted to all valves at the start of each race or practice session.

Brakes

16.10. Direct drive karts must have effective brakes acting on the rear wheels only, unless specified in Class Regulations.

16.10.1. Karts in the gearbox Classes must have brakes operating on all four wheels, with independent front and rear systems which must be hydraulic. Should one of the systems fail, the other must guarantee braking on two front or rear wheels.

16.10.2. Master cylinders must be fitted in a position safe from impact, at least 150mm behind the front bumper or to the rear of the pedals.

16.10.3. Hydraulic pipes must be securely fitted to the chassis upper sides and should be protected against damage.

16.10.4. All karts must have an effective dual connection between the brake pedal and calliper if mechanical, and between the pedal and master cylinder if hydraulic.

16.10.5. Where there is a dual linkage between master cylinders, the mandatory requirement for a secondary dual connection is waived.

16.10.6. The prime connection may be either solid or cable-operated, with a secondary safety cable set slightly looser to act as a back up in case of failure.

16.10.7. Drum brakes are not permitted.

16.10.8. Brake discs must be made from ferrous material.

16.10.9. When a cable is used, a minimum thickness of 1.8mm is mandatory.

16.10.10. An efficient rear brake disc protective pad (in Teflon, Nylon, Delrin, carbon fibre, Kevlar or Rilsan) is mandatory in all categories (except Gearbox Classes unless specified in Class Regulations) if the brake disc protrudes below, or is level with, the main chassis tube nearest to the ground. This protection must be placed laterally in relation to the disc in the longitudinal axis of the chassis or under the disc. It must be located within 120mm of the centreline of the brake disc.

Steering

16.11. The Kart must be controlled by a steering wheel with a continuous rim not incorporating any reflex angles in its basic shape.

16.11.1. The upper and lower one third of the circumference may be straight or of a different radius to the rest of the wheel.

16.11.2. Any device mounted on the steering wheel must not protrude by more than 20mm from the plane forward of the steering wheel (see Diagram 8) and must not have sharp edges.

16.11.3. It is recommended that the minimum diameter for a steering wheel is not less than 300mm across its widest section.

16.11.4. Wheels with flat handgrips are acceptable.

16.11.5. Flexible steering controls, by cable or chain, are prohibited.

16.11.6. All parts of the steering must have a method of attachment offering maximum safety (split pins, self locking nuts or burred bolts).

16.11.7. The fitting of a steering lock is not permitted when the Kart is being driven.

16.11.8. The steering column must have a minimum diameter of 18mm and a minimum wall thickness of 1.8mm. It must be a hollow tube and be constructed from Magnetic Steel.

16.11.9. All karts must have the steering column mounted in such a way that even if the bottom retaining fastening is removed, it cannot pull free from its lower bearing.

Stub Axles

16.12. The use of chromium-plated stub axle assemblies is not permitted for any 250cc Gearbox Classes.

Seating

16.13. It is recommended that the seat be made of a fire retardant material.

16.13.1. It must be rigidly located on the chassis and designed to securely locate the Driver, without movement relative to the chassis when cornering or braking.

16.13.2. It is mandatory that all seats comprise metal or nylon reinforcement at all the anchorage points between the seat supports, any additional seat stays and the seat.

16.13.3. Reinforcements must have a minimum thickness of 1.5mm and a minimum surface area of 13 sq cm, or a minimum diameter of 40mm.

16.13.4. All such supports must be bolted or welded at each end.

Pedals

16.14. Whatever the position of the pedals, they must never protrude forward of the chassis or bumper.

16.14.1. The accelerator must be operated by a pedal equipped with a return spring.

16.14.2. Any device linking the accelerator and brake pedals, such that either of them may be prevented from being independently depressed partially or fully is prohibited.

16.14.3. For Karts in Long Circuit trim the brake pedal and all the parts operating the master cylinders must be made of steel and must be strong enough to withstand the forces applied.

Exhausts

16.15. The exhaust system must discharge behind the Driver and must not exceed a height of 45cm.

16.15.1. The terminal part of the silencer must not cross the quadrilateral formed by the outside of the wheels and the front and rear bumpers.

16.15.2. It must not present a hazard.

16.15.3. The Kart must have protection to prevent any contact between the exhaust system and the Driver when seated in the normal driving position.

16.15.4. Intake and exhaust silencing is mandatory.

16.15.5. Competitors must ensure that engines are prepared and equipped in order to meet or better sound level requirements.

16.15.6. Event Organisers and venue operators may impose more strict levels according to their own environmental requirements. Such additional restrictions must be published in event SRs and be approved by Motorsport UK.

16.15.7. The requirements for sound control Officials (Environmental Scrutineers) are detailed in G.7.8.

Sound Testing

16.16. Effective exhaust and induction muffling is mandatory on all karts so that the sound level regulations contained in 16.15.4 to 16.15.5 and 16.16.6 to 16.16.10 are respected.

16.16.1. The responsibility rests with the Competitor to comply with the sound regulations.

16.16.2. Scrutineers will check all intake and exhaust silencers for professional construction and secure fixing.

16.16.3. Any Competitor losing a silencer during a race will be immediately shown a black flag.

16.16.4. Intake silencers sealed to the carburettor intake, so that all air entering the carburettor passes through the intake silencer, are mandatory for all classes.

16.16.5. Details of specific silencing requirements and of approved silencers are given in the Motorsport UK Karting Yearbook.

16.16.6. Sound testing must be carried out at all kart race meetings using equipment equal to or better than the minimum requirements of G.7.8, which should be calibrated before use.

16.16.7. Tests will be conducted using a microphone suspended over the track above the normal driving line and connected by cable to the sound level meter.

16.16.8. The microphone should be positioned on a straight section of the track at a point where karts are at maximum power.

16.16.9. The measurement position should be selected so that the effects of ambient and reflected sounds are minimised. This position will be shown on the track licence.

16.16.10. Maximum sound levels will be 108 dBA with a microphone set at a height of 1.8m ±0.1m, or 105 dBA with a microphone set at a height of 3.6m ±0.1m above the track.

Fuel

16.17. Fuel must be Pump Fuel, as defined in Nomenclature and Definitions part (a), plus lubricant, where applicable. CIK compliant Fuel, as defined in Nomenclature and Definitions part (b), may be used if specified in Championship Regulations.

16.17.1. The petrol/lubricant mixture, as well as petrol only, must comply with the specifications in Nomenclature and Definitions.

16.17.2. Electrically powered vehicles are permitted.

16.17.3. Alternative fuels may be permitted subject to Motorsport UK approval.

16.17.4. The fuel tank must be fixed in such a way that neither it nor the fuel pipes, which must be flexible, present any danger of leakage during the competition.

16.17.5. The use of devices fitted to fuel lines, such as 'Powerplus', 'Proplus' or 'Carbonflow', is prohibited.

16.17.6. If plastic is used for the tank, it must be of a type suitable for carrying fuel.

16.17.7. The tank must supply the fuel pump with petrol under normal air pressure only.

16.17.8. Unless otherwise specified the petrol tank must be mounted within the area of the chassis frame.

16.17.9. Where appropriate, the Class Regulations will specify tank capacity.

16.18. For all classes, to enable a fuel test to be conducted, 3 litres of fuel should be present and a minimum of one litre of fuel must be present at the end of each race. The penalty for failure to have the minimum quantity present is disqualification from the results in that race.

16.18.1. This sample of one litre will be sent by Motorsport UK for analysis at a laboratory selected from those on the UKAS list.

16.18.2. In the event that less than 3 litres are available then the competitor forfeits the right to select a sample for their own analysis (D.34 applies).

16.18.3. Competitors must declare the percentage of lubricant used and further must provide when requested a minimum of 0.5 litre of that lubricant.

16.19. Deleted.

Bodywork and Bumpers

17. The following regulations apply unless specifically varied in Class Regulations.

Short Circuit Karts

17.1. All short circuit karts must be fitted with bumpers and bodywork providing front, rear and side protection.

17.1.1. All bodywork fitted to short circuit karts (with the exception of Bambinos, Cadets and Super Cadets) must be CIK Crash-Tested and Homologated, with the sole exception of the rear protection. CIK Crash-Tested and homologated bodywork that expired in 2008 or later, may continue to be used.

17.1.2. CIK bodywork consists of a Front Fairing, Front Panel (Nassau Panel) and Side Pods as well as their homologated bumpers/bars and fixings. All parts must at all times conform to the relevant homologation fiche in every way.

17.1.3. The combination of homologated bodywork elements of different makes or models is authorised, save and except that the two side bodywork elements must be used together as a set. Components from the same element cannot be mixed, i.e. side bars from one homologation cannot be used with side pods from another homologation.

17.1.3.1. Alternative CIK-homologated bumpers, only as detailed on the Motorsport UK published list, may be used in lieu of those homologated with the side pod or front fairing.

17.1.4. No element of bodywork may be used as a fuel tank or for the attachment of ballast.

17.1.5. No alteration of bodywork elements is allowed.

17.1.6. On non-gearbox karts the CIK-homologated detachable front fairing mounting kit (CIK drawing 2c) must be used, unless otherwise specified in Class or Championship regulations.

17.1.7. For Cadet karts in any British or National titled Championship the CIK-homologated detachable front fairing mounting kit (CIK drawing 2c) must be used.

Front Bumper (Drawing 8)

17.2. The front bumper must:

17.2.1. Consist of two steel elements, lower and upper.

17.2.2. Be independent from the attachment of the pedals.

17.2.3. Be attached to the chassis-frame by 4 points.

17.2.4. Have a minimum front overhang of 350mm.

17.3. The lower bar must:

17.3.1. Have a height of 90mm ± 20mm.

17.3.2. Have two attachment tubes of at least 50mm long, parallel (in both horizontal and vertical planes) to the axis of the chassis. They must be 450mm ± 5mm apart and centered in relation to the longitudinal axis of the kart. These attachments must be welded to the chassis-frame.

17.3.3. Have a minimum diameter of 20mm (the two corners must have one constant radius of curvature).

17.3.4. Have a straight length of 300mm minimum in relation to the longitudinal axis of the kart.

17.4. The upper bar must:

17.4.1. Have a height of 225mm ± 25mm from the ground.

17.4.2. Have attachments 550mm ± 5mm apart and centered in relation to the longitudinal axis of the kart. These attachments must be welded to the chassis frame.

17.4.3. Have a minimum diameter of 16mm (the two corners must have one constant radius of curvature).

17.4.4. Have a straight length of 380mm minimum in relation to the longitudinal axis of the kart.

Front Fairing (Drawing 6)

17.5. The front fairing must:

17.5.1. Under no circumstances be located above the plane through the top of the front wheels.

17.5.2. Not comprise any sharp edges.

17.5.3. Have a maximum gap between the front wheels and the back of the fairing of 180mm (with the wheels in the straight ahead position). 150mm for gearbox karts, unless varied in Class Regulations.

17.5.4. Have a front overhang of 680mm maximum. 650mm for gearbox karts, unless varied in Class Regulations.

17.5.5. Where the CIK-homologated detachable front fairing mounting kit (17.1.6) is mandatory, it must at all times be fitted and maintained in the correct position, in accordance with Drawing 17.5. It is not permitted to reposition, nor attempt to reposition, a front fairing except by stopping in the repairs area (where such a facility is provided) and this may not be done after passing the chequered flag and before release from Parc Fermé.

Front (Nassau) Panel (Drawing 6)

17.6. The front panel must:

17.6.1. Not be located above the horizontal plane through the top of the steering wheel.

17.6.2. Allow a gap of at least 50mm between it and the steering wheel.

17.6.3. Not protrude beyond the front fairing.

17.6.4. Have its lower part solidly attached to the front part of the chassis-frame.

17.6.5. Have its top part solidly attached to the steering column support with one or several independent bar(s).

Rear Bumper

17.7. There is no mandatory requirement for a CIK Crash-Tested and Homologated rear protection system for National events.

17.7.1. For all classes except 210 National, 250 National and pre-2011 Cadet chassis a CIK Crash-tested and Homologated rear protection system in accordance with the CIK regulations may be used in lieu of a rear bumper.

17.7.2. For all Gearbox Classes where a CIK Crash-Tested and Homologated rear protection system is not used, a rear bumper to Gearbox rear bumper regulations (17.13) must be used.

17.8. The rear bumper must:

17.8.1. Be constructed from magnetic steel tubing with minimum outside diameter of 18mm and a minimum wall thickness of 1.4mm.

17.8.2. Consist of a minimum of a single horizontal tube, with outer extensions forming a closed loop, with two link tubes to the chassis anchorage points (as per Drawing 5, Diagram 1) at least 450mm apart at any point. The radius of the outer extension is free but it should not be less than 21⁄2 times the tube outside diameter.

17.8.3. Have its tube and uppermost extension element between 160mm and 200mm above the ground in dry configuration.

17.8.4. Have its upper tube and extension loops madefrom a single piece of tubing.

17.8.5. In side view, have a rearward rake of between 20 and 45 degrees to the vertical (see Drawing 5, Diagram 3).

17.8.6. Have an overall width not exceeding the rear width of the kart at any time (measured to the outside of the rear wheels or tyres, whichever is the greater).

17.8.7. Cover at least 50% of each rear wheel/tyre at all times.

17.8.8. Have any attachment fasteners made of high tensile steel.

17.8.9. Have any studs with more than 3 threads protruding from the rear of the kart covered with appropriate nuts, caps or suitable protective cover.

Side Bumpers (Drawing 8)

17.9. The side bumpers must:

17.9.1. Be attached to the chassis-frame by 2 points, which must be 500mm ± 5mm apart. These two attachment tubes must be least 50mm long, parallel (in both horizontal and vertical planes) to the axis of the chassis.

17.9.2. Have their upper bar at a minimum height of 160mm above the ground.

17.9.3. The side bumpers may be shortened and re-drilled in order to reduce the width of the kart; no other modifications are permitted to the homologated side bumpers.

Side Pods (Drawing 6)

17.10. The side pods must:

17.10.1. Under no circumstances be located either above the plane through the top of the front and rear tyres or beyond the plane through the external part of the front and rear wheels (with the front wheels in the straight ahead position). In the case of a "Wet Race" side pods may not be located outside the plane passing through the outer edge of the rear wheels.

17.10.2. Not have the outermost point of the external face located inside the vertical plane through the two external edges of the wheels (with the front wheels in the straight ahead position) by more than 40mm.

17.10.3. Have a ground clearance of 25mm minimum and 60mm maximum.

17.10.4. Have uniform and smooth surfaces that must not comprise holes or cuttings other than those necessary for their attachment.

17.10.5. Have a maximum gap between the front of the side pods and the front wheels of 150mm.

17.10.6. Have a maximum gap between the back of the side pods and the rear wheels of 60mm.

17.10.7. Not overlap the chassis-frame seen from underneath.

17.10.8. Be solidly attached to the side bumpers.

Gearbox Kart Bumpers

17.11. All gearbox karts in the 125 Open, 250 National and 210 National classes, unless specified in class regulations, must be fitted with bumpers/bodywork providing front, rear and side protection.

17.11.1. Rear bumper measurements will be taken as follows:

For the upper element, the measurement will be taken to the top of tube.

For the lower element it will be measured to the top of the tube and then the diameter of that tube subtracted, the result being the official measurement of height.

Where a gap is specified, this will be measured between the bottom of the upper element and the top of the lower element.

All measurements to be taken with the kart in dry condition.

Front Bumper

17.12. The front bumper must:

17.12.1. Consist of at least 2 steel elements. A steel upper bar mounted in parallel above a steel lower bar, with a minimum diameter of 18mm and a minimum wall thickness of 1.5mm, both bars being connected with 2 vertical tubes and welded to the upper rail as a minimum, and presenting a vertical flat face.

17.12.2. Allow the attachment of the front fairing whenever a mandatory requirement.

17.12.3. Be attached to the chassis frame by 4 points.

17.12.4. Have a front overhang of maximum 350mm.

17.12.5. Have the lower bar straight and with a width of 150mm minimum in relation to the longitudinal axis of the kart.

17.12.6. Have the attachments of the lower bar parallel (in both horizontal and vertical planes) to the axis of the chassis; they must be 155mm minimum apart, but are recommended to be a minimum of 220mm apart as mandated by CIK Superkart regulations, and centred in relation to the longitudinal axis of the kart at a height of 60mm ± 20mm from the ground.

17.12.7. Have the upper bar straight and with a width of 250mm minimum in relation to the longitudinal axis of the kart.

17.12.8. Have the upper bar 170mm minimum and 220mm maximum above the ground.

17.12.9. Have the upper bar attachments 500mm ±50mm apart and centred in relation to the longitudinal axis of the kart.

17.12.10. Have the attachments of the upper bar and the lower bar welded to the chassis frame.

17.12.11. At no time have its upper element exceeding the height of the foot pedals, with the pedals in the relaxed position.

Rear Bumper

17.13. The rear bumper must:

17.3.1. Be constructed of magnetic steel tubing with a minimum outside diameter of 18mm and a minimum wall thickness of 1.5mm.

17.13.2. Consist of a minimum of two horizontal and parallel tubes, with outer extensions forming a closed loop with a minimum radius of 21/2 times the tube outside diameter, with two vertical link tubes to the chassis anchorage points (as per Drawing 5, Diagram 2).

17.13.2.1. The vertical gap between any two horizontal elements must not exceed 95mm. Should that maximum dimension be exceeded there must be at least one element – minimum outside diameter of 18mm and minimum wall thickness of 1.5mm – fitted approximately centrally and vertically seen from the rear, either permanently fixed or clamped between these horizontal elements.

17.13.3. Have its upper tube and uppermost extension element between 220mm and 280mm above the ground and be a minimum of 1100mm in length, and a maximum of the overall kart width.

17.13.4. Have its upper tube and extension loops made of a single piece of tubing.

17.13.5. Have its lower tube fixed horizontally between the main uprights or the end of the chassis main tubes, between 40mm and 90mm above the ground in dry configuration, be straight and a minimum of 600mm in length. If the kart is fitted with a rear diffuser with a minimum of 4 vertical strakes, not more than 20mm from the bumper, the minimum height of the lower element must be between 75mm and 165mm. Alternatively, and for Long Circuit only, the lower tube must be between 100mm and 140mm above the ground in dry configuration, be straight and a minimum of 600mm in length.

17.13.6. Inside, have a rearward rake of between 0 and 45 degrees to the vertical (Drawing 5, Diagram 3).

17.13.7. In the case where a vertical bumper is fitted, have the extension loops strengthened by triangulated steel braces to the chassis to reduce folding in onto the rear tyre.

17.13.8. Have an overall width not exceeding the rear width of the kart at any time (measured outside the rear wheels or tyres, whichever is the greater).

17.13.9. Cover at least 50% of each rear wheel/tyre at all times.

17.13.10. Have any attachment fasteners made of high tensile steel.

17.13.11. Not be an alternative design/material or an adjustable width bumper, except with specific written approval from Motorsport UK.

17.13.12. Have any studs with more than 3 threads protruding from the rear of the kart covered with appropriate nuts, caps or suitable protective cover.

Side Bumpers

17.14. These side bumpers are mandatory in all configurations whenever CIK crash tested bodywork is not used.

17.15. Side bumpers must:

17.15.1. Be made from magnetic steel tubing with a minimum outside diameter of 18mm and a minimum wall thickness of 1.5mm.

Officiel d'Honneur Appointments

The following have accepted the position of Officiel d'Honneur for 2022:

M F L Allison

G H Bailey

W Beattie

I D Bennie

K N Blackburn

G S B Blythe

H T Chapell

T J Hassall

A Dean-Lewis MBE

R McCabe

N S Manser

J B H Wood

B Wright

P Liddle

17.15.2. Consist of two bars each side of the kart both bars being connected with 2 tubes and welded together, and presenting a vertical flat face, and they must be attached to the chassis frame by a minimum of 2 points. These 2 attachments must be parallel to the ground and must be a minimum of 450mm apart. Note for CIK Division 1 and 2 Superkarts, the 2 attachments must be perpendicular to the axis of the chassis and must be a minimum of 520mm apart.

17.15.3. Have a clearance between the bars and the tyres not exceeding 100mm (with front wheels in the straight ahead position).

17.15.4. Not extend beyond the plane through the outside of the front and rear tyres, with the front wheels in the straight ahead position (dry configuration).

17.15.5. At all times cover a minimum of 66% of the rear tyres.

17.16. The lower bar must:

17.16.1. Not exceed the height of the top of the rear axle.

17.16.2. Have a minimum straight length of 500mm.

17.16.3. Be 60mm ±20mm from the ground.

17.17. The upper bar must:

17.17.1. Deleted.

17.17.2. Be joined to the lower bar at each end and also include two additional uprights.

17.17.3. Have a minimum straight length of 400mm.

17.17.4. Be 200mm ±20mm from the ground.

Gearbox Short Circuit Bodywork

17.18. Gearbox Short Circuit bodywork is defined as including mandatory bodywork to general Short Circuit Kart regulations unless varied in Class regulations.

17.18.1. Lateral bodywork and front fairings must never cut the plane through the top of the front and rear tyres.

17.18.2. Rear vertical wing ends are permitted if class regulations allow but any form of wing or winglets or fully enveloping body panels are not permitted.

17.18.3. Flooring as 16.6 for short circuit karts.

Gearbox Long Circuit Trim

17.19. Gearbox Long Circuit Bodywork trim is defined as any combination of wings (either full width or part width), side pods which are above the plane of the top of the front to rear tyres, or a full width front fairing to 17.23.2.

17.19.1. Wings are not mandatory.

17.19.2. If a front fairing is mandatory it will be specified in Class Regulations.

17.19.3. No part of the bodywork, including wings and end plates, shall be adjustable from the driving seat in racing condition when the kart is in motion.

Long Circuit Bodywork

17.20. Bodywork, bubble shield and wing must:

17.20.1. Be soundly constructed of a non-metallic material.

17.20.2. If plastic be splinter-proof.

17.20.3. Be designed to provide maximum safety for the driver and other competitors both during normal racing and in any accident.

17.20.4. Not present any sharp edges.

17.21. No part of the bodywork, including wings and end plates, shall:

17.21.1. Be higher than 600mm from the ground (except for structures solely designed as head-rests with no possible aerodynamic effect).

17.21.2. Extend beyond the rear bumper.

17.21.3. Be nearer to the ground than the floor tray.

17.21.4. Extend laterally beyond the plane of the front and rear tyres (with the front wheels in the straight ahead position and with the wheels in their outermost position), except in the case of a wet race (see Drawing 7, Diagram 9).

17.21.5. Have a width of more than 1400mm.

17.21.6. Have a gap of less than 25mm between any part of the bodywork and the tyres.

17.22. Should a complete bodywork and bubble-shield be used, the bubble-shield shall be connected to the bodywork by no more than four quick release clips and shall have no other fixing device.

17.22.1. Should the bubble shield be a separate structure, its maximum width shall be 500mm and the maximum width of its fixing frame 250mm.

17.22.2. The bubble-shield must neither be located above the horizontal plane passing through the top of the steering wheel nor be less than 50mm from any part of the steering wheel.

17.22.3. At the bottom the bubble-shield shall end symmetrically 150mm minimum from the pedals in the normal resting position and shall expose (not cover) the feet and the ankles.

17.22.4. In all cases, when the bubble-shield is removed, no part of the bodywork shall cover any part of the Driver seated in the normal position seen from the above.

17.23. The front of the nose of the bodywork must not constitute a sharp angle but must have a minimum radius of 20mm.

17.23.1. Front fairings must be such that it is possible for the front bumper to comply with the requirements.

17.23.2. They must not be wider than the front wheels when in a straight ahead position and the top of the fairing must be above the horizontal plane passing through the top of the front tyres.

17.24. The floor tray shall be of flat construction and must have a curved beading edge.

17.24.1. From 230mm ahead of the rear shaft, the floor tray may have an angle orienting it upwards (extractor). If the latter has one or two side fins, they must not protrude beyond the plane formed by the flat part of the floor tray.

17.24.2. Neither the floor tray nor any other part of the bodywork shall in any way resemble a skirt.

17.24.3. The floor tray shall not extend beyond either front or rear bumpers.

17.24.4. The width of the floor tray shall conform to and not exceed the dimensions of the bodywork including wings and end plates.

17.24.5. It is not allowed to cut lightening holes in the floor tray.

Number Plates

17.25. Number plates must have rounded corners (with diameters 15 to 25mm) and 22cm sides.

17.25.1. Stick-on panels used on an existing surface in lieu of a number plate need not have rounded corners and must be at least 17cm high by 17cm width with a minimum 1cm space on all sides of the numbers.

17.25.2. Number plates or stick-on panels as described above must be displayed in accordance with drawing 17.25. The numbers must be at least 15cm high and 2cm stroke width.

17.25.3. Numbers must be fitted to front, rear and both sides.

17.25.4. Number plates must be securely attached and numbers always legible.

17.26. For Long Circuit events, number plates must be carried front, rear and on the side facing the Timekeeper's box.

17.26.1. The plates must be square with sides of minimum 25cm.

17.26.2. The numbers must be minimum 20cm high with a minimum stroke of 3cm.

17.26.3. The plates must be fixed so as not to bend or otherwise change their attitude in the airflow.

17.26.4. The front and side number plates may be made of fibre glass (polyester).

17.27. No Club may alter the requirements concerning the numbering of Karts.

17.27.1. The plates must be in opaque flexible plastic, fixed in such a way that they are not deflected by the airflow.

17.27.2. The plates must be solid or be attached to a solid backing and contain no holes other than those required for fixing.

17.27.3. The numbers must be of the 'Classic' type as shown below and represented with an Arial type font:

1–2–3–4–5–6–7–8–9–0.

17.27.4. Novice number plates will be black with either white or yellow numbers.

17.28. Motorsport UK reserves the right to approve non-standard race numbers such as Grand Prix Winner – GP and 0 (zero), and also race numbers 1-10 (one to ten). No other non-standard numbers or numbers 1-10' are permitted.

17.28.1. Those awarded their respective "number" (one to ten) or non-standard plate may use it for the following year should they continue to race in the same Class and in the same type of event (Short Circuit Gearbox one to ten may not use their numbers for Long Circuit events or vice-versa).

As soon as Championship results are declared final the previous seasons plates may no longer be used and the new Championship winners will be the only drivers allowed to use such numbers.

Weight

17.29. Subject to 15, clubs may run classes to heavier weight limits (if Motorsport UK approval is given by the issue of a Kart Technical Exception (KTE)), but may not reduce the weight limits.

17.29.1. If it is necessary to use ballast in order to achieve a minimum weight no installation of ballast, be it a single unit or combination of units, may exceed 5kgs each and each such installation must be attached by at least two mechanical fixings.

17.29.2. More than one installation of ballast may be used provided that each is attached in accordance with 17.29.1.

17.29.3. No solid object (excluding jewellery/dog tags) may be carried on the Driver's person.

17.29.4. Plugs and plug spanner may be carried on the Kart in a suitable receptacle, secured to the kart in a manner acceptable to the Scrutineer.

17.29.5. After a Kart and Driver have competed in a heat or race, it is not permissible to alter the weight of the Kart or Driver in any way before being weighed.

17.29.6. For classes that include a minimum driver weight only mandatory items of Personal Protective Equipment (PPE), as required by 13.1-13.3, are to be included when the Driver is weighed.

Rear Lights on Long Circuit Gearbox Karts

17.30. A rear-facing high intensity lamp must be fitted.

17.30.1. It will be permanently illuminated when wet tyres are fitted to the kart or a race is designated as a wet race, or when instructed to do so by the Clerk of the Course.

17.30.2. Only lamps having a high intensity, polarised light source and homologated with the MSA/ Motorsport UK/FIA will be permitted.

17.30.3. The lens must have a minimum surface area of 28 sq cm and the illumination must be visible from a point 45° either side of the centre line.

17.30.4. The lamp unit must be mounted securely and centrally on the Kart, forward of the rear bumper and the whole illuminated area of the light is to be positioned in the area shown in drawing 17.30, in wet or dry configuration.

17.30.5. The light must be able to be switched on by the driver when seated in the normal driving position by means of a switch.

17.30.6. Karts with lights not switched on when a race is declared wet will not be let out onto the circuit from the Assembly Area or Pit Lane.

Engines and Transmissions

18.1. The Scrutineer must be satisfied that the engine, transmission, exhaust system and all associated parts are installed in a workmanlike manner and will perform safely and present no undue hazard to the Driver or other Competitors.

18.1.1. Where hand-throttle systems are fitted to assist push starts, these should be maintained in a clean and fail-safe condition.

Engine

18.2. The engine must be the sole propelling unit of a Kart in running order.

18.2.1. It may be a two or four stroke engine, but both types may not take part in the same race (except Formula Cadet and compatible four stroke Cadet Classes which may be amalgamated).

18.2.2. Other four stroke engines of equivalent performance may be raced with two stroke engined karts in the same race, subject to Motorsport UK authorisation.

18.2.3. Unless the SRs state otherwise, only engines readily available through normal commercial channelsmay be used.

18.2.4. Forced induction in any form is not permitted.

18.2.5. Power valves are allowed subject to class regulations.

18.2.6. All electronic/microchip methods of operation are forbidden.

18.3. Unless Class Regulations permit, any form of manually operated or variable ignition (advancing or retarding systems) is forbidden.

18.4. Unless Class Regulations permit, the use of programmable electronic engine management systems, which can be varied whilst the kart is in motion, is also forbidden.

18.5. Engines must be fitted with effective radio interference suppressors.

18.5.1. Only sealed, leak proof batteries are permitted.

18.5.2. Proprietary lead acid batteries, sealed for life, properly mounted and protected, are acceptable.

18.5.3. Engine starter batteries where permitted must be fitted to a main chassis rail or within the confines of the main chassis frame and shall be placed on the chassis in an area located to the side of the seat opposite the engine and behind the central strut or alternatively mounted on or behind the seat. If Lithium batteries are used, they must carry the appropriate "EC" and markings.

18.5.4. Terminals and electrical connectors must be covered with insulating material.

18.6. No part of the cooling system is permitted to be located directly in front of the Driver's seat and may not pass over any part of the Driver's body.

18.6.1. All pressurised pipes must be reinforced and a catch tank is recommended on cooling systems with vented caps.

18.6.2. A retaining device is recommended on pressure caps.

18.6.3. The use of inhibiting agents including anti-freeze is permitted.

Transmission

18.7. The transmission is the method of transferring drive from the crankshaft drive sprocket to the back axle sprocket.

18.7.1. For some classes this drive may have a variable ratio gearbox interposed between engine and back axle sprocket.

18.7.2. Direct drive classes must not be fitted with a variable ratio transmission. However, they may be fitted with a clutch if permitted in Class Regulations.

18.7.3. Clutches are recommended for all Cadet and Junior categories, and are mandatory for all new Cadet and Junior UK homologated engines.

18.7.4. Karts competing in the Gearbox Classes must be equipped with a variable ratio transmission providing a minimum of two speeds and must be fitted with a clutch.

18.8. All classes must use axles of magnetic steel material with a maximum external diameter of 50mm.

18.8.1. The axle wall thickness at all points (except in keyway housings) must comply as minimum to the dimensions shown in the table below. Exceptionally axles for use in 210 and 250 National classes with a diameter greater than 40mm must have a minimum wall thickness of 2.9mm. Please also refer to class regulations for any variations.

Maximum external diameter (mm)	*Minimum thickness (mm)*
50	1.9
49	2.0
48	2.0
47	2.1
46	2.2
45	2.3
44	2.4
43	2.5
42	2.6
41	2.8
40	2.9
39	3.1
38	3.2
37	3.4
36	3.6
35	3.8
34	4.0
33	4.2
32	4.4
31	4.7
30	4.9
29	5.2
28	Solid Axle
27	Solid Axle
26	Solid Axle
25	Solid Axle

18.8.2. The drive must always be to the rear wheels only.

18.8.3. Any method may be used provided no differential is incorporated.

18.8.4. All methods of chain oiling and greasing whilst the vehicle is in motion are forbidden, unless specifically permitted in the SRs.

18.8.5. Effective protection must be provided over the top and both sides of the exposed transmission chain (or belt) and sprockets, and extend to at least the lower plane of the rear axle.

18.8.6. Access for the starter is permitted.

18.8.7. Clutches on non-gearbox karts must be covered preferably by metal guards.

18.8.8. Non-gearbox karts must use a 219 pitch chain only.

18.8.9. For Long Circuit all rear axles must be fitted with a circlip – or a similarly effective hub retaining device – on each end of the axle.

Cameras

19. 12.6.1 applies. Cameras must be attached securely to the kart and be approved by the Chief Scrutineer and Event Organiser. The weight of the camera (excluding any additional casing, mounting and associated fixing) must not exceed 100gms.

Procedure for the Testing of Tyres (C4.3)

20.1. See D36.

Judicial

21.1. Clubman Short Circuit Kart events: The Clerk of the Course is responsible for all judicial duties, with the exception of meetings specifically authorised by Motorsport UK for the Stewards of the Meeting to have judicial responsibility in accordance with 21.2. below.

21.1.1. Interclub status kart events may operate the above Clerk of the Course Judicial process where specific authority has been requested by the Organiser and has been given by Motorsport UK for the purposes of the Event Permit. Such Permission must be clearly notified in the Supplementary Regulations for the Event and / or any Final Instructions.

21.1.2. Neither the decision for imposing any penalty nor the penalty itself, during any timed qualifying or heats, is eligible for appeal.

21.1.3. In respect of the final(s), the Stewards of the Meeting may hear a validly lodged appeal where permitted against sporting matters determined by the Clerk of the Course. However there is no right of appeal to the National Court against any sporting decision of the Stewards of the Meeting OR against any eligibility Decision.

21.2. For Interclub and above status short circuit Kart events: The Stewards of the Meeting are responsible for all judicial duties.

21.2.1. Neither the decision for imposing any penalty nor the penalty itself is eligible for appeal.

21.2.2. Clubman status kart events may operate the above (21.2) CIK Judicial process where specific authority has been requested by the Organiser and has been given by Motorsport UK for the purposes of the Event Permit. Such Permission must be clearly notified in the Supplementary Regulations for the Event and/or any Final Instructions.

21.2.3. Any penalty resulting from a Judge of Fact statement may be imposed directly by the Clerk of the Course.

Drawing number 10

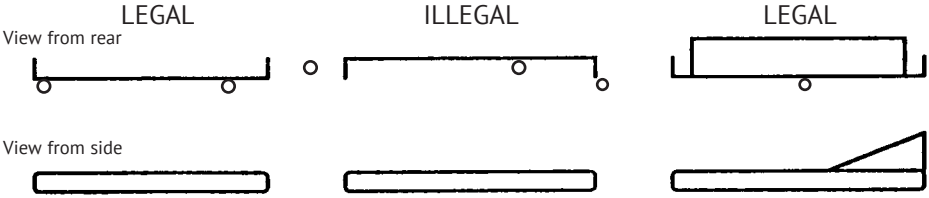

Drawing number 11

Only suits bearing one of the below labels are acceptable as CIK homologated.

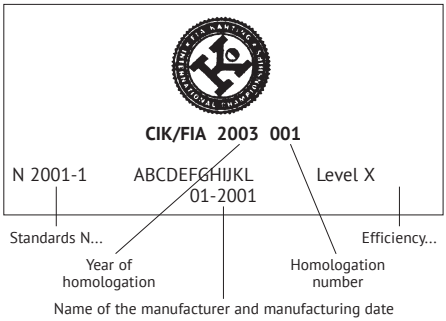

Drawing number 5

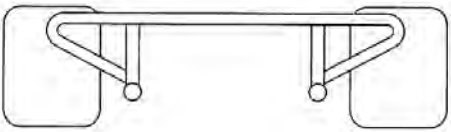

Diagram 1

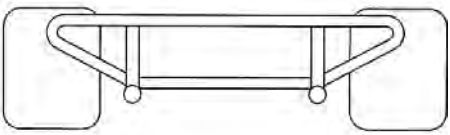

Diagram 2

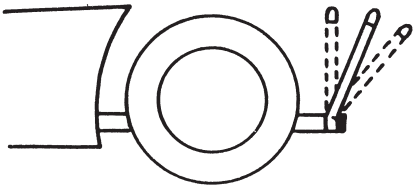

Diagram 3

Drawing number 6

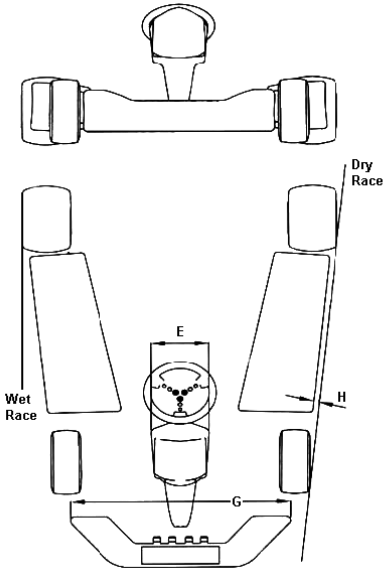

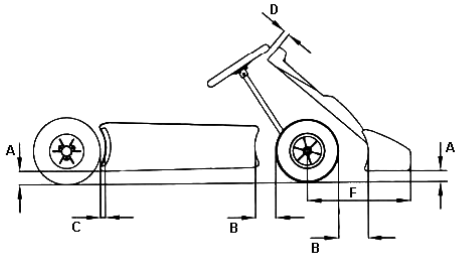

Code Letter	Short Circuit	Cadet	Limit
A	25mm	25mm	Minimum
(Driver onboard)	60mm	60mm	Maximum
B	180mm (150mm gearbox)	150mm	Maximum
C	60mm	60mm	Maximum
D	50mm	50mm	Minimum
E	250mm	250mm	Minimum
	300mm	300mm	Maximum
F	680mm (650mm gearbox)	530mm	Maximum
G	1000mm	700mm	Minimum
	External width of front track	1000mm	Maximum
H	40mm	40mm	Maximum
I	150mm	150mm	Maximum

Drawing number 7

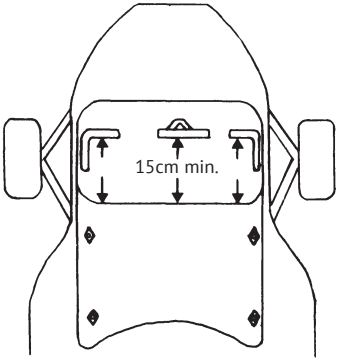

Lower end of bubbleshield showing minimum 15cm gap between shield and pedals. Also indicating the maximum 4 fixing points if shield attached to bodywork.

Diagram 6

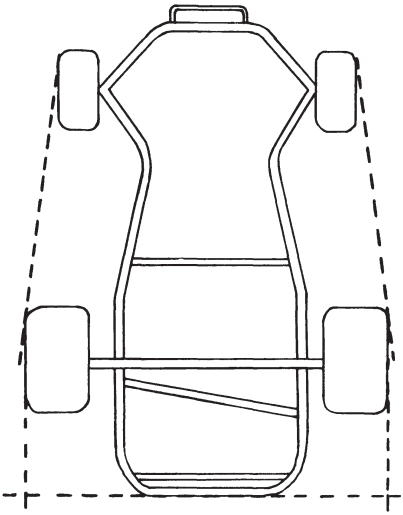

The plan showing the limits beyond which neither bodywork, wings or end plates may protrude. (Kart in dry tyre condition.)

Diagram 9

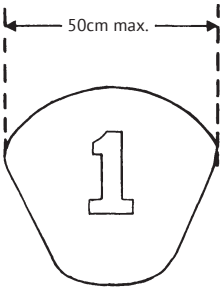

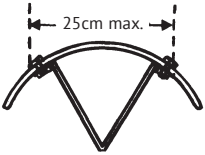

Bubbleshield showing overall width dimensions and the maximum width of supports.

Diagram 7

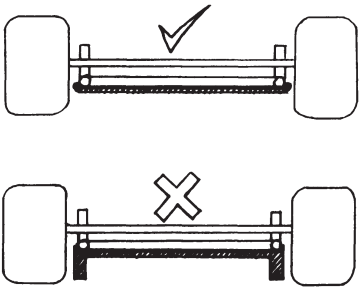

Floor tray. Showing legal and illegal. Illegal is defined as creating a skirt effect.

Diagram 10

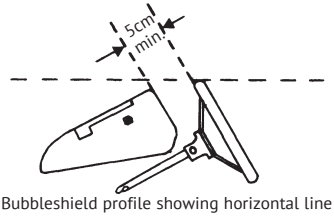

Bubbleshield profile showing horizontal line it must not cross and the minimum 5cm gap between the shield and steering wheel.

Diagram 8

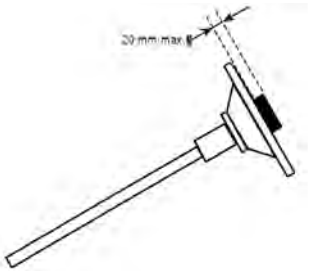

Steering wheel projection.

Diagram 8a

Drawing number 8

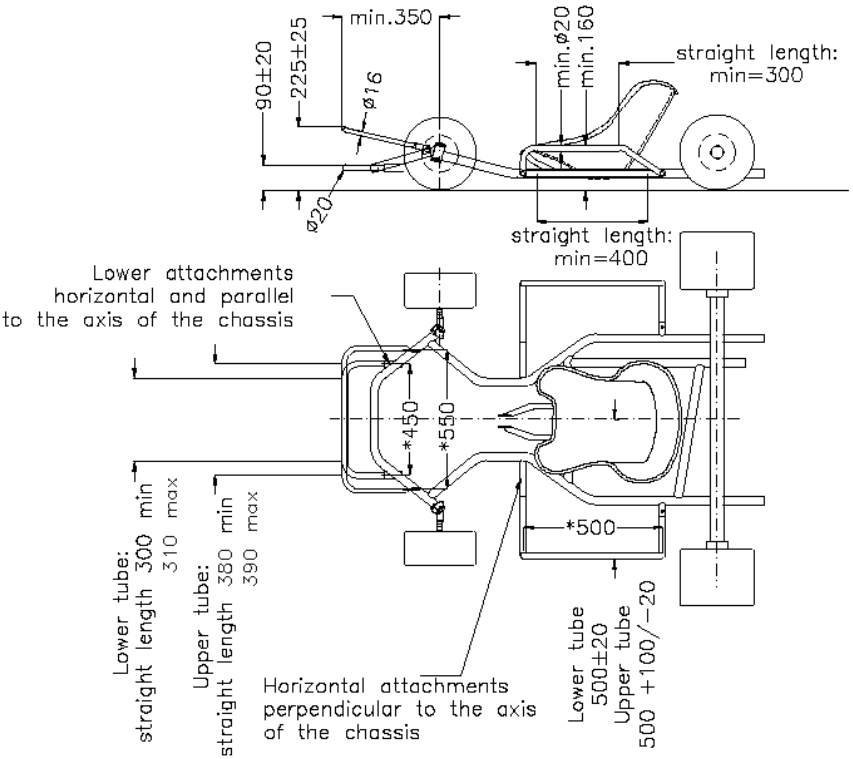

Lower Tube Ø 20mm with one constant radius.

Upper tube Ø 16mm with one constant radius.

** ± 5mm, tube axes dimensions*

Dimensions in mm

Drawing number 14

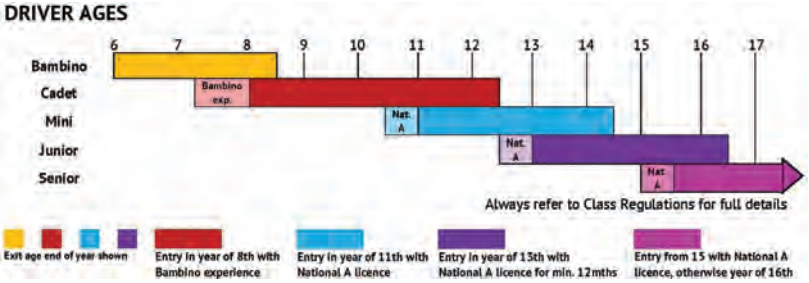

Drawing number 7.5.1

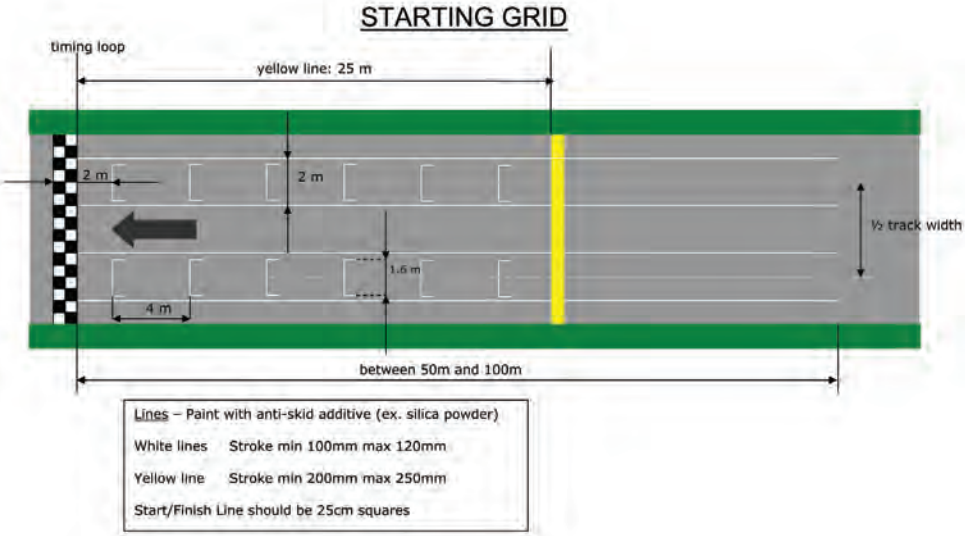

Drawing number 17.25

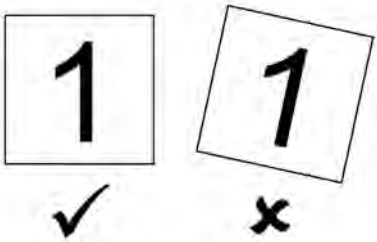

Drawing number 17.30

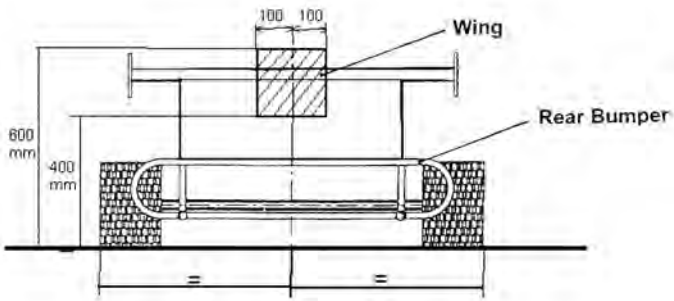

Drawing number 17.5

Correct position

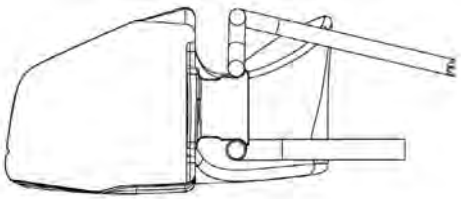

Unacceptable position – if any part of the front bumper tubes is in an area marked 'A'

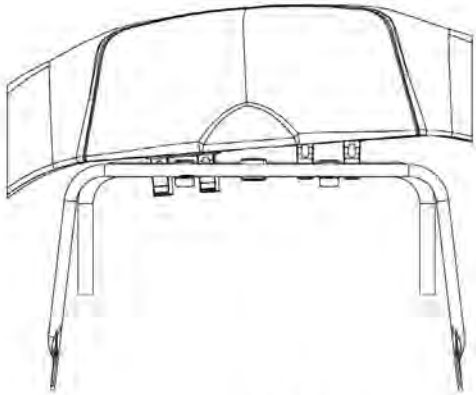

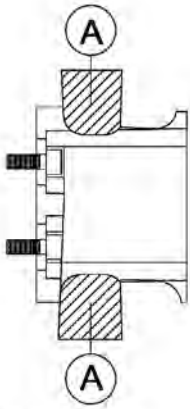

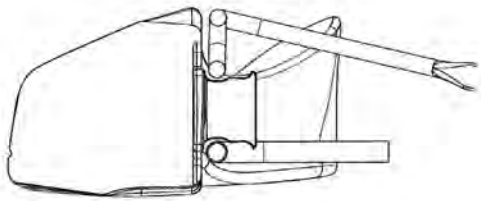

(V) Records

1. Jurisdiction

The FIA will adjudicate upon all claims to International Class and World Records. Claims to such Records following attempts within the territory of Motorsport UK will be submitted to the FIA by Motorsport UK. Motorsport UK will adjudicate upon all other claims to Records made within its territory. At all times these regulations should be read in conjunction with the FIA's Appendix "D".

2. Records Recognised. The only Records which may be recognised are Local Records, National Records, International Records and World Records. No distinction is drawn between Records made on a track and Records made on a road.

2.1. *Local Record* – recognised by Motorsport UK, within its jurisdiction, as the result achieved on an approved course, whatever the nationality of the driver. A record made during a race is not recognised.

2.2. *National Record* – established in conformity with the rules of Motorsport UK and deemed to be a Class record on its territory, or the territory of another ASN with their prior authority. Irrespective of class it may also be recognised as an absolute national record.

2.3. *International Record* – recognised by the FIA as the best result achieved in one of the categories, groups, cylinder – capacity classes or other sub-divisions prescribed in the International Sporting Code and Appendix D.

2.4. *World Record* – recognised by the FIA as the best result achieved irrespective of category, group or class prescribed in the International Sporting Code and Appendix D.

2.5. Records restricted to their own Class. A vehicle having established or beaten a Record in its own class may beat a World Record, but cannot beat the same Record in any other Class.

3. Vehicles Eligible to Establish Records. FIA World and International – see Appendix 1. National – see Appendix 2.

4. Times & Distances Recognised

4.1. *International* – refer to Appendix D

4.2. *National*

Miles – Standing Start 1/4 – 1 – 5 – 10 – 50 – 100 – 200 – 500 – 1000 – 2000 – 5000 – 10000

Flying Start – 1/4 – 1 – 5 – 10

Kilometres – Standing Start – 500m 1 – 5 – 10 – 50 – 100 – 200 – 500 – 1000 – 2000 – 5000 – 10000

Flying Start – 500m – 1 – 5 – 10

Hours – Standing Start – 1 – 3 – 6 – 12 – 24

5. Record Attempts

5.1. All attempts shall be subject to the prescriptions of the FIA International Sporting Code, the Motorsport UK National Sporting Code and General Regulations in so far as they can be applied.

5.2. For all record attempts, reference should be made to FIA Appendix D.

5.3. An International or National record attempt or the organisation of a group of record attempts is considered to be a sporting event. National attempts are considered to be a National event independent from the nationality of the competitors.

5.4. Records can be made on a track or road.

5.5. A successful attempt must represent an increase of 1% of the average speed of the current record. The Attempt Permit may be issued to the competitor attempting the record or a Registered Club. The successful competitor(s) will be the record holder subject to ratification by Motorsport UK.

5.6. The competitor may not publish or have published, distribute or have distributed the result of an Attempt before ratification by Motorsport UK, unless prior permission is given. The results may then be circulated and must include the statement "Subject to Motorsport UK Ratification" in clearly visible letters. Motorsport UK has the right to reject or approve the proposed publicity.

6. Application for a Record Attempt

6.1. The Entrant or Organisation must submit a completed Application for Authorisation to Motorsport UK's Speed Executive, at least 6 weeks prior to the date of the Attempt together with the appropriate fee.

6.1.1. An Organising Permit, otherwise known as Attempt Permit, is issued as the authorisation.

6.2. Mandatory declaration for authorisation:

6.2.1. Proof of landowners' permission.

6.2.2. Local Police Authorities to be informed.

6.2.3. Fully licensed Speed Event Rescue Unit and Crew Required.

6.2.4. For any venue or course without a valid track licence, a plan and surveyors report must be submitted. A valid track licence is required for all Attempts.

6.2.5. Liability for all Motorsport UK costs.

6.2.6. Liability for all Officials costs.

6.2.7. Any noise or environmental restrictions.

6.2.8. Necessary Insurance.

7. Officials

7.1. Motorsport UK will appoint a Steward who will be responsible for the supervision of the Attempt, has the authority to stop, suspend or modify the programme; will maintain a detailed log of all stops and operations at a control station. After the Attempt, send to Motorsport UK a detailed report and the relevant reports of the Timekeeper and the Scrutineer.

7.2. Other Officials as required to supervise operations at Control Stations and observation along the course.

7.3. The Entrant is responsible for nominating an Attempt Co-ordinator, and meeting the costs of, a Motorsport UK licensed Timekeeper, Eligibility Scrutineer and Rescue Unit, approved by Motorsport UK Records Panel for Record Attempts.

7.3.1. An Attempt Co-ordinator may not necessarily be the Entrant, and is the person responsible for the co-ordination of the Attempt which includes the liaison with the Officials and represented organisations.

8. Licences

8.1. The competitor(s) must hold a valid International Competition Licence for an International Record Attempt; for a National Record Attempt an International or National 'A' (Open), National 'A' or a licence endorsed "Record Attempts Only".

9. Course

9.1. The course may be either a permanent or temporary track or a circuit and have a valid track licence relevant to the Attempt.

9.2. The course may be the open type with a control line at each end of the measure distance or of the closed type with a single control line.

9.3. A section of track covered without stopping, with reversal of the direction of running after crossing the control line at each end of a measured distance is a close course.

9.4. During an Attempt of up to 24 hours only the vehicle attempting the record, nominated Officials, Rescue and service vehicles are permitted to use the track.

9.5. For records up to 1 mile the course will be of the open type with a maximum gradient of 1%; for flying starts this will apply to the two extensions at the beginning and end of the measured distance even if they are not straight and are used as part of the course for the flying start. The measured distance must be covered in both; consecutive runs must not exceed 60 minutes. Should a competitor make an unsatisfactory start and providing the vehicle does not cross the control line a re-start is permitted.

9.6. For records up to 10 miles and 10 kilometres the course may be of the open or closed type.

9.6.1. Open Course – the measured distance must be covered in both directions and including the return run must not exceed 1 hour.

9.6.2. Closed Course – the car crossing the single control line lap after lap. The direction of running is free, as appropriate to the track licence.

9.7. For records over 10 miles and Time records the course must be of the closed type. The direction of running is free. For records over 5000km and 24 hours on a circuit where all curves are in the same direction, the direction of running may be reversed every 5000km by crossing the control line, turning back and passing over it again in the opposite direction without stopping.

10. Scrutineering

10.1. Prior to the start, the Scrutineer will verify that the vehicle conforms to the category, group and class, and the relevant vehicle regulations and safety requirements.

10.2. Using approved measuring instruments measure the cubic capacity of the engine. Alternately, affix approved seals to the relevant components for examination at the conclusion of the Attempt. Seals may only be broken by the person affixing the seal or with their written permission by a person designated by Motorsport UK to make the examination.

10.3. The vehicle must remain under the control of the Scrutineer if transported to another place for verification.

10.4. At the end of the Attempt, the Scrutineer will make the final verification and give a written report to the Motorsport UK Steward.

11. Timekeeping

11.1. On an open course, time is recorded as the car crosses the start and finish lines in both directions with a break at the end of each run.

11.2. On a closed course times are recorded lap after lap as the car crosses the single start-finish line.

11.3. At the end of the Attempt, the Timekeeper will give to the Motorsport UK Steward, a written report, the original record of times and relevant calculations.

11.4. A Speed Timekeeper, of the appropriate grade, as nominated by Motorsport UK is required.

12. Control Stations

12.1. Stations may be located along the course at designated areas.

12.2. Authorised stations:

12.2.1. Open Course – One next to the start line and finish line. The station near the start line will be the main station where any operation allowed will be carried out.

12.2.2. Closed Course – One next to the single control line.

12.2.3. Intermediate stations at a maximum interval of 5km (2.5km in the case of simultaneous attempts).

12.2.4. A car shall not be out of sight for more than one minute during its travel.

12.3. At all stations, the vehicle must be stationary with or without engine running. Pushing the vehicle within the limits of the station by the competitors' assistants is permitted.

12.4. Starting the engine by a push start is permitted or by its normal designated starting method.

12.5. If the vehicle stops during an Attempt, it may restart by its own means and continue.

12.6. Should the vehicle stop along the course, the driver may push the vehicle without any outside assistance to the nearest station for authorised replenishment or repairs to enable the vehicle to resume the Attempt.

13. Authorised Operations

13.1. Before the Attempt, except for replenishment materials, all spare parts, auxiliary materials and tools to be carried on the vehicle or held at a main station shall be listed with their total weight and given to the Motorsport UK Steward. Only the listed items are permitted to be used during the Attempt. Body panels, window glass and exhaust systems shall be considered as replenishment materials and need not be listed.

13.2. Competitors' assistants using the authorised spare parts, auxiliary materials and tools of the station may carry out operations at main and intermediate stations. The vehicle must be stationary during such operations.

13.3. The station may have tools, materials and equipment similar to that of a normal road service station.

13.4. All operations concerning refuelling, cleaning, tuning, fitting, replacement of wheels, tyres, sparking plugs, injectors, electrical components, repairs and welding are authorised.

13.4.1. Welding of the fuel tank, its lines and attachments is prohibited at any station but may be permitted at a designated place purely for the repair and under the supervision of an appointed Official.

13.5. Replenishment materials are deemed to be – wheels, tyres, sparking plugs, injectors, electrical components, water, oil, fuel, hydraulic fluids, hoses, fastening devices and items normally found at a normal road service station. Coachwork, body panels, window glass and exhaust systems shall be considered as replenishment materials.

13.5.1. Replenishment is permitted at the intermediate stations.

13.6. Operations not permitted at stations, may only be made by the driver alone using the parts, tools and materials authorised for the Record Attempt.

13.6.1. Operations permitted outside of a station or along the course shall be those made by the driver alone using the parts, materials and tools authorised for the Attempt and without any outside assistance.

13.6.2. Spare parts, auxiliary materials, tools and ballast carried on the vehicle must be property positioned and firmly secured.

14. Records Over 10 Miles and Time Records

14.1. Except for replenishment materials, all spare parts and auxiliary materials not carried by the vehicle shall be at the main station.

14.2. The equivalent total weight shall be carried by the vehicle as ballast; the safety roll-over bar shall be considered as ballast.

14.3. The total weight of the spare parts, auxiliary materials, tools and ballast carried by the vehicle shall not exceed 5% of the homologated or declared weight of the vehicle, plus 20kg. The weight of the replenishment material is free.

Appendix 1 – FIA World and International Records

Are available on the FIA website.

Appendix 2 – National Records

1. Vehicles Eligible to Establish Records

1.1. *Special Vehicles:* Vehicles on at least four wheels not aligned, which are propelled otherwise than through their wheels.

1.2. *Special Automobiles:* A land vehicle propelled by its own means, running on at least four wheels not aligned, which must always be in contact with the ground; the steering must be ensured by at least two of the wheels, and the propulsion by at least two of the wheels.

2. Groups, Classes & Cylinder Capacity

2.1. Group I: Reciprocating 2 or 4 stroke engine with forced induction

Group II: Reciprocating 2 or 4 stroke engine without forced induction

Group III: Diesel cycle engine with forced induction

Group IV: Diesel cycle engine without forced induction

Group V: Rotary engine with forced induction

Group VI: Rotary engine without forced induction

Group XV: Hydrogen reciprocating engine

2.2. Groups I & II combined – with or without forced induction.

Groups III and IV combined – with or without forced induction.

Class A	over 8000cc
Class B	over 5000cc up to 8000cc
Class C	over 3000cc up to 5000cc
Class D	over 2000cc up to 3000cc
Class E	over 1500cc up to 2000cc
Class F	over 1100cc up to 1500cc
Class G	over 750cc up to 1100cc
Class H	over 500cc up to 750cc
Class I	over 350cc up to 500cc
Class J	over 250c up to 350cc
Class K	up to 250cc

2.3. Group VIII: Electric Engine

Class 1	unloaded weight up to 500kg
Class 2	over 500kg up to 1000kg
Class 3	over 1000kg

(W) Championships

General

1.1. Motorsport UK defines a Championship as "an event, or series of events, organised for the purpose of establishing the right to an individual or collective title. Such a competition may also be referred to by other titles, e.g. Challenge, Trophy or Series", within the context of this section referred to as "Championship". Where reference to "Series" is made, within this section, is defined in Q.6.2.

1.1.1. Commercial Sponsorship is defined as "the provision of, or assistance in the provision of, awards by an organisation other than a recognised Club towards the result of a Championship. The donation of such awards, whether in cash or in kind, is given in consideration of the title or product name connected with the organisation being associated with the promotion of the Championship".

1.1.2. Motorsport UK may also designate as "Commercial" any Championship which it considers as being publicity oriented.

1.1.3. A competitor shall not take time off school to participate in motor sport without the prior written approval of their school.

1.1.4. A Championship must be submitted to Motorsport UK by the co-ordinating organisation on the prescribed form and must be issued with a Championship Permit or Registration before entries are accepted.

1.1.4.1. A Permit and/or facility fee may be charged for such approval.

1.1.4.2. Motorsport UK reserves the right to charge a Promoter's Permit fee.

1.1.4.3. The organisation and control of a Championship or Series shall at all times rest with the Championship Permit holder, subject to these Regulations.

1.1.5. Exceptionally Championships for Autotests, any form of un-timed Trial, Navigational Rallies, 12 Car Rallies, Scatters and Internal Club Challenges (unspecified events on unspecified dates) which are confined to bona fide members of the organising club are exempt from registering with Motorsport UK.

1.1.6. The right to a Championship or Series title resides with the body who originally registered that Championship or Series. However, where a Championship or Series was originally proposed by a commercial body, that body shall have the right to nominate or change the organisers of that Championship or Series, subject to the terms of their contract.

1.1.6.1. Championships bearing the title International, European, British, National or other titles which mean to convey the same impression are normally reserved for Championships promoted by, or on behalf of, Motorsport UK. Organisations wishing to make application for such a Championship or to be associated with such a title, should seek separate approval from Motorsport UK prior to application for a Permit.

If at any time Motorsport UK shall refuse or withdraw a Championship Permit, then any prior approval under this regulation to use, for example International, European or any other title as above shall immediately terminate.

1.1.6.2. Championships bearing the title British and including one or more qualifying rounds of International status events, where those rounds are also rounds of an FIA Championship, must submit their calendars by 31st May in the preceding calendar year for approval by the Motor Sports Council. Championships bearing the title British and comprising International events not being rounds of an FIA Championship and/or national events must submit their calendars by 31st August in the preceding calendar year for approval by the Motor Sports Council.

1.1.6.3. Motorsport UK alone shall be entitled to authorise the broadcasting, transmission, audio/visual recording and moving picture rights of any Motorsport UK Championship event. Prior to any such event the organising club will arrange for the consent of the landowner to be given in order that Motorsport UK may authorise such broadcasting, transmission or audio/visual recordings to take place. For all events held on the public forest estates managed by Natural Resources Wales, Forestry and Land Scotland, and Forestry England, special arrangements exist with Motorsport UK. Further details of these arrangements are available from Motorsport UK.

1.1.6.4. To accrue points or any other form of recognition towards an award or title any organisation, team, company, sponsor or person must be in possession of a valid Entrant's Licence.

1.1.7. The registration of a Championship or Series for a specific class of vehicle does not give the Organiser the right to prevent other Championships or Series for that class of vehicle (subject to the authority of Motorsport UK.

1.1.7.1. Championship and Series Organisers may specify in their Regulations procedures for the gathering of on-board data logging information.

1.1.8. Where a Championship Permit has been issued, Championship Sporting and Technical Regulations may not be amended after publication unless Motorsport UK and all competitors registered for the Championship agree in writing to the alteration. Such amendments must be circulated to all Registered Competitors, Championship Stewards, Eligibility Scrutineer, Clubs organising Rounds of the Championship and to Motorsport UK.

1.1.8.1. Championships exempt from registering with Motorsport UK do not need to comply with 1.1.8 above (1.1.5).

Note: Throughout these sections an asterisk(*) indicates a requirement for additional information to be printed in the Supplementary Regulations (SRs). Text shown in Italics indicate a Regulation which may be amended in the SRs. Text shown in red indicates a new or amended regulation for 2022.

Championship Grades

1.2. There are four grades of Championship recognised by Motorsport UK. Relevant fees are contained within Part 3, Appendix 1.

A British Championships approved by Motorsport UK

B Principal Commercial Championships

C Sponsored (and/or Commercial) Championships

D Unsponsored (non-Commercial) Championships.

Car Racing Championship

1.3. All Car Racing Championship Permit or Series Registration applications must be submitted by a recognised lead Club – no related discussion between Motorsport UK and an applicant will be entered into without the express agreement of the lead club. Normally only Clubs which have been recognised by Motorsport UK for more than two years are permitted to apply for a Championship Permit. The deadlines for Car Racing Championship applications are as follows:

1st October

1.3.1. Date by which a Notice of Intent to run or continue to run a racing Championship in the following year must be registered with Motorsport UK. For existing Championships, a list of the number of starters at each round held in the current year and the year previous to the year of application must also be submitted.

With the exception of a Winter Championship run to the same regulations as a current main Championship and which is required to submit its regulations a minimum of 6 weeks prior to the first round, any Notice of Intent received after 1st October will only be considered by the Motor Racing Championship Control Panel in exceptional circumstances, and will be subject to a late submission fee of 100% of the Championship Permit fee. Any Notice of Intent received on or after 1st January of the following year will be refused.

Any major changes in a Championship must be notified to Motorsport UK with the Notice of Intent.

The Motor Racing Championship Control Panel will discuss and may recommend outline consent for those Championships submitted and may delegate to a Working Group any unresolved queries.

1.3.1.1. Any new Championship or any fundamental change to an existing Championship (such as a new class or classes), conflicting with an existing registered Championship will need to demonstrate to the Motor Racing Championship Control Panel that inclusion of the Championship (or any fundamental change to an existing Championship, as the case may be) will not detrimentally affect the safe, fair or orderly conduct of motor sport.

1.3.1.2. Any applicant dissatisfied with a decision of the Motor Racing Championship Control Panel shall be entitled to request a review, of the decision to be undertaken by the Chairman of the National Court or, in the event that he is not available, someone nominated by him and his decision shall be final. Such a request must be received, by Motorsport UK, within 14 days of written notification of the Control Panels decision, together with the appropriate fee.

1.3.1.3. In respect of all proposed new Race Championship applications a Notice of Intent must be submitted in accordance with 1.3.1 above. Any new Championship must have guaranteed support for a minimum of three years ('the Term').

1.3.1.3.1. If the Motor Racing Championship Control Panel agrees, in principle, with the application then Motorsport UK will require a Commitment Guarantee Agreement to be paid executed and delivered in a form satisfactory to Motorsport UK.

1.3.1.3.2. Consistent with 1.1.6 the Commitment Guarantee Agreement must be executed by the Recognised Club proposing the new Championship and where applicable by the Commercial entity proposing the Championship through that Recognised Club in which case the Commitment Guarantee shall be joint and several.

1.3.1.3.3. The Commitment Guarantee Agreement will mandate that if the Recognised Club fails to seek a Championship Permit renewal by submission of a Notice of Intent and or making a Permit Application for the second and or third successive years then the Guarantor(s) must pay a sum as specified in Appendix 1 Article 7.

1.3.1.3.4. The Default Sum shall be paid on demand in writing by Motorsport UK accompanied by taxable invoice.

1.3.1.3.5. All issued and pending Championship Permits of the relevant Recognised Club shall be suspended until the Default Sum has been paid to Motorsport UK or has been provided for to its satisfaction.

1.3.1.3.6. All Default Sums forfeit to Motorsport UK shall be used for the provision of prizes or for training or donation to a Registered Charity nominated by the Board of Motorsport UK.

1.3.1.4. Any Club whose Championship has either ceased to run or has failed to commence will be required to submit a complete new application if approval is sought in any subsequent years.

1.3.1.5. To maintain Championship status, the minimum average number of starters during the previous year in a Grade A, B, C or D Championship should be 16. For Truck Racing Championships the average minimum number of starters should be 12. For Junior Car Race Championships Q.7.3 applies.

1.3.1.5.1. For a Championship failing to meet the minimum numbers:

(a) in the previous year will be issued with a warning.

(b) for a second consecutive year the Championship may lose its status including ability to use the term Championship but may run as a Series only with the approval of Motorsport UK.

1.3.1.5.2. For the avoidance of doubt 1.3.1.4 applies in the case of any Championship that is subject of 1.3.1.5.1 (b).

1.3.1.6. Provision has been made for a (single) Venue Specific Championship which does not meet the provisions of 1.3.1.5 but this dispensation will be reviewed on an annual basis. A Venue based Championship may visit once during the season an alternate venue, and the Championship Permit Number shall be suffixed with a "V" to differentiate these Championships.

1.3.1.7. Any mixed discipline Championship in which more than three events are Car Races will also be required to submit a Car Racing Championship Permit Application.

1.3.2. Points Scoring

Unless the particular Championship Regulations specify differently, all Commercial Car Racing Championships must utilise the points system as detailed in paragraph (a) or (b) below. Alternative systems of allocation that are approved must be clearly indicated in the particular Championship Regulations.

(a) Championships without Classes: points will be awarded at
20 – 15 – 12 – 10 – 8 – 6 – 4 – 3 – 2 – 1.

An additional 2 points will be awarded to each competitor achieving or equalling the race fastest lap, where the race is timed.

(b) Championships with Classes: points will be awarded in each class as follows:

4 or more eligible starters in the class:
1st – 4; 2nd – 3; 3rd – 2; 4th – 1.

3 eligible starters in the class:
1st – 3; 2nd – 2; 3rd – 1.

2 eligible starters in the class:
1st – 2; 2nd – 1.

1 eligible starter in the class: 1st – 1.

One additional point will be awarded to each competitor achieving or equalling the race fastest lap in each class, where the race is timed.

Points should be awarded on the basis of the final results of each event.

1.3.3. Maximum Scores

Unless the particular Championship regulations specify differently, a competitor's final total of points that he may count toward his position in the Championship will be calculated as follows:

(a) Where there are up to 10 rounds organised in the Championship, a competitor shall count his results in the total number of events run less one.

(b) Where there are between 11 and 15 rounds organised in the Championship, a competitor shall count his results in the total number of events run less two.

(c) Where there are over 15 rounds organised in the Championship, a competitor shall count his results in the total number of events run less three.

(d) Points scored by a driver in different classes within a Championship will be totalled separately towards his final placing. However, a change of car within a class will not affect a driver's points total.

1.3.4. Resolving Ties

Unless the particular Championship Regulations specify differently, ties will be resolved in the following order:

(a) By considering in the best scoring events of the competitors concerned, the number of first places or class wins.

(b) By considering the number of class or outright second places where there are no classes, and so on in the best scoring events.

(c) By considering the placings in all Championship events.

1.3.5. Competitors may be required to register for a Championship prior to the first event in which they wish to gain points.

1.3.6. Competitors may be required to carry advertising as supplied to publicise the Championship in accordance with H.27.1.2 in order to qualify for points and prize money.

1.3.7. Organisers retain the sole right to select or accept entries for any event and Motorsport UK or Championship organisers cannot therefore be responsible for the refusal of an entry (Subject to H.29.1.3(b)). It is recommended that the following priorities be adopted when making selection from all entries received by the closing date:

First Point scorers in the Championship.

Second Registered competitors who have taken part in previous rounds of the Championship.

Third Registered competitors competing for the first time in the Championship.

1st December

1.3.8. Deleted.

1st February

1.3.9. Date by which formal application and final details for a racing Championship previously notified must be submitted. A surcharge of 50% will be incurred (minimum of £100, or £50 for Club Championships). No applications will be accepted after this date and outstanding applications will lapse.

Stage Rally Championships

1.4. Normally only Clubs or Associations which have been recognised by Motorsport UK for more than two years are permitted to apply for Championship registration or a Championship Permit. Once a Club or Association has registered a Championship, or has been issued a Permit, it takes responsibility for controlling all Sporting, Technical, Financial and Calendar matters and must guarantee prize money as published.

1.4.1. Proposals to alter any of the Sporting or Technical Regulations for the Championship after registration or the issue of a Permit must be notified to Motorsport UK for approval before publicity and must comply with D.11.

1.4.2. A copy of the Championship registration or Permit and a copy of the Championship Regulations must be lodged with all Clubs organising a qualifying round. The Stage Rally Championship Control Panel reserves the right to classify any Championship as 'Commercial', when a sliding scale of charges may apply. Failure by any Club or Association to comply with all Championship Regulations may result in the cancellation of the Championship.

The deadlines for Stage Rally Championship applications are as follows:

1st September

1.4.3. Date by which International, National and Club Championships must give Notice of Intent to run, or continue to run, a Stage Rally Championship in the following year. Any major changes which may conflict with other Championships must be notified to Motorsport UK with Notice of Intent. For existing Championships, the number of starters at each round held in the current year's Championship prior to application must be submitted with the Notice of Intent.

Any Notice of Intent received after 1st September will only be considered by the Stage Rally Championship Control Panel in exceptional circumstances. Their decision will be final. The Stage Rally Championship Control Panel will discuss and may recommend outline consent for those applications submitted.

31st December

1.4.4. Date by which final details must be submitted. All Association Rally Championship applications must be submitted in detail by 31st December.

Kart Racing Championships

1.5. There will be four types of Short Circuit Non Gearbox Championships:

1. British & National Championships (1.5.6)
2. Regional Championships (1.5.7)
3. Championships held within a standard Club meeting (1.5.8)
4. Closed to Club Championships (1.5.9).

General

1.5.1. All Kart Race Championship applications must be submitted by a recognised lead Club, no related discussion between Motorsport UK and any third party will be entered into without the agreement of the lead club. Only Clubs or Associations which are recognised by Motorsport UK for more than two years are permitted to apply for a Championship Permit and which may be granted at the sole discretion of Motorsport UK. Once a Club or Association has registered a Championship, or has been granted a Permit, it takes responsibility for controlling all Sporting, Technical, Financial and Calendar matters and must guarantee prize money as published.

1.5.2. Proposals to alter any of the Sporting or Technical Regulations for the Championship after registration or the issue of a Permit must be notified to Motorsport UK for approval before publicity and must comply with D.11.

1.5.3. A copy of the Championship registration or Permit and a copy of the Championship Regulations must be lodged with all Clubs organising a qualifying round. The Kart Championship Control Panel reserves the right to classify any Championship as 'Commercial', when a sliding scale of charges may apply. Failure by a club or association to comply with all Championship Regulations may result in the cancellation of the Championship.

The deadlines for Kart Racing Championship Applications are as follows:

1st September

1.5.4. Date by which Notice of Intent to run or continue to run a Kart Championship in the following year should be registered with Motorsport UK.

1.5.4.1. Any major changes in a Championship must be notified to Motorsport UK with the Notice of Intent.

1.5.4.2. For existing Championships, a list of the number of starters at each round held in the year previous to the year of application must also be submitted.

1.5.4.3. The average number of starters during the previous year in a Grade A or B Championship should be at least 15 and for a Grade C or D Championship should be at least 10.

1.5.4.4. A Yellow Card will be issued to a Championship, which has been unable to meet the average number of starters, as set out in 1.5.4.3., during the previous year. If in the following year the average number of starters continues not to satisfy 1.5.4.3. then the Championship may be refused.

1.5.4.5. Any new manufacturer backed Championship must have guaranteed manufacturer support to the satisfaction of Motorsport UK for a minimum of three years. Any other new Championship will ideally have run as a series of standalone races during the previous year, to demonstrate competitor support and justify Championship Status.

1.5.4.6. Any Notice of Intent received after 1st September will only be considered by the Kart Racing Championship Control Panel in exceptional circumstances. Their decision as to whether to consider or not will be final. The Kart Racing Championship Control Panel will discuss and may recommend outline consent for those Championships submitted and may delegate to a Working Group any unresolved queries.

28th February or six weeks before the first round whichever is the sooner

1.5.5. Date by which formal application for a kart racing Championship previously notified must be submitted.

British & National Kart Championships

1.5.6. To qualify as a British or National Kart Championship the Championship Class must be run in a minimum of three different Regions. Only the designated Core classes, as defined in the Karting UK Yearbook (Appendix 6), will be permitted to be included in a National Championship.

1.5.6.1. Only Motorsport UK may designate the British and National Championship promoter(s) as in its sole discretion it considers appropriate.

1.5.6.2. British and any National Championships will consist of a maximum of seven meetings.

1.5.6.3. Motorsport UK reserves the right to request pre-qualifiers as appropriate.

1.5.6.4. The current British or National Championship Class top 5 will automatically qualify but only for that specific class and subject to all other criteria being met.

Unless Motorsport UK has given prior written authorisation the following regulations apply to Regional Kart Championship, Kart Championships held within a standard Club Meeting and Kart Club Championship.

Regional Kart Championship

1.5.7. To qualify as a Regional Kart Championship the Class must be run by a minimum of two Clubs and rounds must be held at a minimum of two and no more than five Clubs/venues within that Region.

1.5.7.1. There must be no rounds outside the Region.

1.5.7.2. Unless Motorsport UK has given prior written authorisation these championship events may only be held as part of a club meeting.

Kart Championships held within a standard Club Meeting

1.5.8. There are no restrictions to the number of rounds that may be held for these types of championships provided that they are part of a Standard Club Meeting.

1.5.8.1. The number of additional classes represented may not exceed 40% of the number of classes present at the Standard Club Meeting.

1.5.8.2. The Event organiser may require Championship drivers to fully integrate with the Standard Club Meeting. and they will then compete alongside the club racer. In this circumstance no separate races are to be run for classes already run by the host club.

Kart Club Championship

1.5.9. Unless Motorsport UK has given prior written authorisation rounds of a Kart Club Championship may not be held at more than one venue.

1.5.9.1. There are no restrictions on the number of qualifying rounds for a Kart Club Championship.

Speed Championships

1.6. All Speed Championship applications must be submitted by a recognised lead Club. No related discussion between Motorsport UK and any third party will be entered into without the agreement of the lead club. Only Clubs or Associations which have been recognised by Motorsport UK for more than two years are permitted to apply for a Championship Permit. Once a Club or Association has registered a Championship, or has been granted a Permit, it takes responsibility for controlling all Sporting, Technical, Financial and Calendar matters and must guarantee prize money as published.

1.6.1. Proposals to alter any of the Sporting or Technical Regulations for the Championship after registration or the issue of a Permit must be notified to Motorsport UK for approval before publicity and must comply with D.11.

1.6.2. A copy of the Championship registration or Permit and a copy of the Championship Regulation must be lodged with all Clubs organising a qualifying round. Failure by a club or association to comply with all Championship Regulations may result in the cancellation of the Championship.

1.6.3. The deadline for submitting, to Motorsport UK, for Speed Championship Applications is 28th February or 6 weeks before the first round, whichever is earlier.

1.6.3.1. A 100% Championship Permit fee surcharge may be imposed against any Club who fails to submit their complete Championship application in accordance with 1.6.3.

1.6.4. Any new Championship or any fundamental change to an existing Championship (such as a new class or classes), conflicting with an existing registered Championship will need to demonstrate that inclusion of the Championship (or any fundamental change to an existing Championship, as the case may be) will not detrimentally affect the safe, fair or orderly conduct of motor sport.

1.6.4.1. Any applicant dissatisfied with a decision shall be entitled to request a review, of the decision to be undertaken by the Chairman of the MSC National Court or, in the event that he is not available, someone nominated by him and his decision shall be final. Such a request must be received, by Motorsport UK, within 14 days of written notification of the decision, together with the appropriate fee.

Conditions for the issue of Car or Kart Racing, and Speed Event Championship Permits

2.1. Deleted.

2.1.1. Written agreement from all Clubs organising a qualifying round, and from the owners of licenced tracks to be used, must be held by the Championship Organisers.

2.1.2. The issue of a Championship Permit in addition to an Event Permit requires that the organising Club, sponsors and track owners are covered for Third Party Legal Liability not exceeding £30 million for any one incident. This cover does not include Product Liability Risk.

2.1.3. Deleted.

2.1.4. Advance publicity may only be issued prior to the granting of a Permit for a New Championship following the granting of outline approval with prior written Motorsport UK approval of that publicity. The Championship must be referred to at all times by its correct and approved title and the Permit number must be included in any published Championship Regulations.

2.1.5. A copy of the approved Championship Permit and Regulations must be lodged with all Clubs organising qualifying rounds. FIA approval may be required for certain Championship rounds going outside the UK (except for the Republic of Ireland).

2.1.6. Motorsport UK reserves the right to impose conditions on the status, dates and promotion of Championships and information must be supplied on the following before a Permit is issued:

(a) The proposed title

(b) The value of the awards, including bonuses

(c) The method of scoring

(d) The method of resolving ties

(e) The eligibility of Competitors and vehicles

(f) The status, dates, promoting Clubs, tracks or courses for the qualifying rounds

(g) Whether or not the Championship has been run in the past

(h) The number of Competitors in the past.

2.1.7. An Organiser granted a Championship Permit takes responsibility for controlling all sporting, technical, financial and calendar matters and must provide and guarantee all prize money, awards and bonuses as stated on the application. Failure by an Organiser to comply with all Championship regulations could render cancellation of the Championship and could affect future applications.

2.1.8. Championship Points may only be issued by the Championship Permit Holder.

2.1.9. The Sporting and Technical Regulations for all Championships must be produced to the standard format approved by Motorsport UK, and must be submitted with the Championship application. Upon issue of a Championship Permit, a set of Championship Regulations as issued to Competitors must be forwarded to the Kart, Race and Speed Executive at Motorsport UK. These Regulations must be signed and dated by the Championship Co-ordinator and bear the wording, in red ink, "PUBLISHED COPY".

2.1.10. All applications for one-make Race Championships, other than any Championship for vehicles with Governmental Type Approval, must include full and detailed chassis/bodywork drawings and specifications.

2.1.11. All Championships approved by Motorsport UK, must comply with the Permit application requirements as detailed. Competitors should ensure that their cars comply with the Motorsport UK Approved Formula Regulations for the class or the specific Championship Technical Regulations.

Officials

2.2. A Championship Co-ordinator (with the exception of Speed Events), Championship Stewards (minimum three) and an Eligibility Scrutineer must be nominated on the Application Form by the Organisers and there may be no duplication of duties. None may be Competitors in the Championship, prepare entries for the Championship or be sponsors of Competitors in the Championship.

2.2.1. The Championship Stewards can only adjudicate upon any disputes, irregularities or appeals arising from the approved Championship Regulations. They are also empowered to consider any request from the Championship Co-ordinator to penalise any Competitor for breach of Championship Regulations and, after holding a formal hearing, to impose a penalty in accordance with C.2.1, subject to the rights of appeal to the MSC provided in Section C.

2.2.2. The Championship Co-ordinator is responsible for liaison with the Championship Stewards and between the Championship Organiser, the Event Organisers and Competitors and the distribution of relevant information. The Co-ordinator should, when present at events, sign on and remain present at the venue until the event has concluded. The Co-ordinator may not impose any penalties or sanctions on a Competitor, but may request the Stewards to hold a hearing into any alleged breach of Regulations. The Co-ordinator does not have the power to make decisions on Sporting or Technical Regulations applicable to the Championship, nor to issue Bulletins, Newsletters or results without the approval of the Championship Organiser. Other than the Clerk of the Course and the Championship Stewards, no other person has any powers or responsibilities within Approved Championship Regulations.

2.2.3. The Eligibility Scrutineer must be Motorsport UK-licenced and specifically approved by Motorsport UK and the Technical Commission for this purpose. Any Championship with a class or classes exclusively for Period Defined Vehicles as defined by Motorsport UK regulation must appoint a Historic Grade Eligibility Scrutineer. The Eligibility Scrutineer should, when present at events, sign on and remain at the circuit until the Official results are published. Any eligibility checks on vehicles must be carried out in full co-operation with the Club organising the event. The Clerk of the Course must be informed of the intention to, and results of, any eligibility checks.

2.2.4. Where Championships require the appointment of a Technical Commissioner to enforce eligibility standards, written application must be made to Motorsport UK. Justification is required and a charge will be made additional to the Permit fee for this facility. All expenses are the responsibility of the Championship Organiser and must be agreed between the Technical Commissioner and the Championship Organiser.

2.2.5. A representative of any sponsor or promoter of an event, Championship, or Series, may not take an active part in the organisation of the competitive or technical side of that event, if any competitor in the event is entered or sponsored by the individual or firm concerned.

2.2.6. To be eligible to be named a permanent Clerk of the Course for a Race Championship, registered with Motorsport UK, the Clerk must be the holder of a current Clerk of the Course National 'A' licence, as a minimum.

Conditions for the issue of all other Championships

3. The conditions for the issue of all championships other than Race, Kart and Speed (2) are detailed in the Sections B, C, D, G and 1 – 1-2. Additionally for Stage Rally Championships at 1.4.

Part 3:

Appendices

Appendix 1

Competition Fees

The Motorsport UK fees structure is designed to support motorsport at all levels. Current licence and other fee levels are given below.

1 Competition Licence Fees

All fees except where otherwise stated are shown 'VAT inclusive' and may be subject to change in the event of the VAT rate being altered.

Race

International – ITA	£1,193.00
International – ITB	£430.00
International – ITC-C	£220.00
International – ITD-C	£220.00
International Truck – ITC-C	£220.00
National Truck	£155.00
National	£155.00
Club	£99.00

RS Drag

International IT DR	£220.00
National	£149.00

RS Cross Country

International – ITC-R	£220.00

RS Rally

International – ITC-R	£228.00
International Historic	£228.00
Stage National	£155.00
Stage Interclub	£99.00
National – Non Driver	£99.00

RS Speed

International – ITD-R	£220.00

RS

National	£149.00
Interclub	£69.00
Clubman	FOC

Kart

International Senior – ITE	£146.00
International Restricted - ITF	£146.00
International Junior - ITG	£146.00
National	£89.00
Interclub	£59.00
Clubman	£45.00
Clubman (Bambino)	£45.00

Entrant

International FIA Open Valid for UK & Overseas	£9,995.00
International (Non-FIA Championship/ Series)	£3,995.00
International Restricted Valid for UK only	£995.00
National Valid for UK National events only	£295.00
Kart International Valid for UK & Overseas	£295.00
Kart Valid for UK	£195.00
Club Entrant Valid UK & National Events only	£70.00
Duplicate (Inc. Club)	£51.00
Entrant PG	£25.00

Other

Failure to produce Licence (H.22.1.2) 50% of licence capped at	£100.00
Express Handling H.8.1	
– 3 day express service	£65.00
– 3 hour service by appointment only	£115.00
Replacement of Licence	£30.00
Upgrading of Licence*	£37.00
Replacement of Entrant Licence	£51.00

*This fee is to be paid in addition to the difference between the cost of the existing licence and the new licence.

When two or more Competition Licences for one person are applied for at the same time, the total fee will be that of the most expensive licence, plus half the cost of the other Licence(s). These reductions will not apply to Entrant Licences. Licences once issued may not be returned for refund.

2 Officials Licences

Clerk of Course

Car International*	FOC
Kart International*	FOC
Rally International*	FOC
Car, Kart, Rally & Other – National	FOC
Car, Kart & Other – Interclub & under	FOC
Driving Standard Observer	FOC
Probationary	FOC

* plus FIA or CIK Yearbook at cost.

Scrutineers & Technical Commissioner

Scrutineer & Technical Commissioner	FOC
Scrutineer – Trainee	FOC

Timekeepers

Timekeeper – All	FOC
Timekeeper – Trainee	FOC

Driver Instructors

ARDS – All Grades	£38.00
ARKS – All Grades	£69.00
AHASS – All Grades	£69.00
BARS – All Grades	£69.00
ARKS Examiner – All Grades	FOC

Rally Accredited Media

Level 1	£68.00
Level 2	£68.00
Level 2 deposit	£150.00

All other Registered Officials

All other registered officials	FOC

3 Fees for Appointment of Motorsport UK Officials

Motorsport UK Steward

For meetings requiring an overnight stay for the Motorsport UK Steward, a contribution per night will be made for travel, accommodation and out of pocket expenses of £272.00 (£227 + vat). Motorsport UK Observer, per 24-hour period	£272.00

Others – per day

Motorsport UK Technical Commissioner	£328.00
Motorsport UK Environmental Inspector [G.7.7]	£328.00

These are set fees charged to the organising club. Motorsport UK nominated officials will claim their out of pocket expenses direct from Motorsport UK.

4 Event Permit Fees

SEE DETAILS ON PAGE 416.

5 Closed Road Application Fees

Clubs seeking to make an application for a Motor Race Order under The Road Traffic Act 1988 (Motor Racing) (England) Regulations 2017 or The Road Traffic Act 1988 (Motor Racing) (Wales) Regulations 2018 and The Motor Sport on Public Roads (Scotland) Regulations 2019 on submission of their proposals for an organising permit pay an administrative fee. £515.00

Motorsport UK will only accept applications for organising permits for closed road motor sport events from Motorsport UK registered motor clubs. If the application is successful, the normal organising permit fees will still apply. Where a promoter utilises the services of a club for the running of a motor sport event, the club is advised to pass Motorsport UK costs and any further administrative costs on to the promoter.

6 Event – Other

Late Permit application fee (D.4.1.2)	£32.00
Late payment fee per week or part thereof	£9.00

Note: Per Capita and other payments together with all required documentation must be sent to Motorsport UK within 14 days after each event (D.26.4). Failure to do so may, in addition to the late payment fee, invoke penalties as set out in D.4.1.2.

7 Championship Permits

Grade A – British Championship – Commercial	£9,475.00
Grade B – Principal Commercial Championship	£4,685.00
Grade C – Commercial – Sponsored	£590.00
Unsponsored	£177.00
Grade D – Unsponsored/ Non-Commercial Championships	£62.00
Race Series Registration Fees	£27.00
Commitment Guarantee Amount (Race) – Grade A & B Championships	£27,000.00
Grade C & D Championships	£5,460.00

8 Facility Fee – Record Attempts and Other Events

8.1. Record Attempts

National Record Attempt Authorisation, per competitor per class (includes Ratification Fees for up to 3 records)	£2,945.00
Ratification Fee for each record claimed over 3	£590.00

Attempts at International Records must be notified to Motorsport UK (as agents of the FIA) at least 6 weeks prior to the attempt.

Motorsport UK Fee	£5,860.00
Motorsport UK direct expenses will be invoiced at cost.	

Separate fees are payable in advance, through Motorsport UK to the FIA. These fees will be advised on request.

8.2. Other Miscellaneous Events

Facility fee for the authorisation of events which fall outside these Regulations by negotiation	

In addition to the fees above the promoter is responsible for all payments in respect of all the Motorsport UK appointed officials and other services.

9 Annual Registration of Recognised Club, Association

Car Clubs	£82.00
Car & Kart Club	£134.00
Recognised Groups	£82.00
Marshals' Club (including Rescue)	FOC
Regional Associations	FOC
Approved Organisation	FOC
Motorsport UK Registered Schools	£735.00
Appeal to National Court for unsuccessful Club Recognition	£500.00

10 Annual Calendar

Late application of change of date (D.3.2)	£10.85
Cancellation (D.3.2.1)	£8.65

11 Track Licences

11.1. Track Licence – Car

Race International + FIA fee	£7,545.00
Race National	£3,800.00
Speed International + FIA fee	£1,170.00
Speed National	£975.00
Speed Interclub	£695.00

11.2. Track Licence – Kart

International + CIK/FIA fee	£995.00
National	£955.00
Interclub	£695.00

Notes: a) For venues with no more than one single day meeting per year, half of the above fee is charged.

(Not applicable for International or Truck meetings.)

b) Where a number of categories are covered, only the highest value fee is payable.

Track licence fees now incorporate all inspection costs.

12 Deleted

13 Judicial

VAT is not payable on Protest Fees, Appeal Fees or Fines.

13.1. Protest Fees at Events

Cheques made payable to 'The Motorsport UK

i) below National without Motorsport UK Steward	£60.00
ii) below National with Motorsport UK Steward	£135.00
iii) National – Non Race	£270.00
iv) National – Car & Truck Race	£415.00
v) International – Non Race	£415.00
vi) International – Car & Truck Race	£680.00

13.2. Appeal Fees at Events (excluding Eligibility Appeals)

Cheques made payable to 'Motorsport UK'

a) to Stewards of Meeting with no Motorsport UK Steward	£125.00
b) to Stewards of Meeting at any other event below National	£270.00
c) to Stewards of Meeting National – non Car & Truck Race	£515.00
d) to Stewards of Meeting at all events not listed above	£790.00
e) Appeal against refusal of entry to an event listed in D20.1.1 which was submitted within 24 hours of commencement of the event (C.6.3.3)	£120.00

13.3. Appeal Fees at Championships

Cheques made payable to 'Motorsport UK'

to Championship Stewards (C.6.5)	£505.00

13.4. Appeal Fees to the National Court (including Eligibility Appeals)

Cheques made payable to 'Motorsport UK'

i) Further Appeal to Motorsport UK in respect of events 13.2(a)	£270.00
ii) Further Appeal to the Motorsport UK in respect of events 13.2(b) & (c)	£525.00
iii) Further Appeal to the Motorsport UK in respect of events 13.2(d) (exluding International)	£790.00
iv) International	£1,430.00
v) Appeal against licence suspension (C.2.1.8)	£515.00
vi) Appeal for remission of sentence (C.2.12)	£515.00
vii) Appeal to an Eligibility Appeal Panel (C.7.2)	£515.00
viii) Appeal against the decision of Championship Stewards (13.3)	£515.00
ix) Appeal to National Court for unsuccessful Club Recognition	£500.00
x) Appeal against refusal of entry to an event or championship (C.6.3.2)	£265.00
xi) Request for review of decision of a Championship Control Panel (W.1.3.1.2)	£485.00
xii) Each party to an Application for an Investigatory Hearing by the National Court (C.9.1.3)	£2,680.00

13.5. Arbitration Fee – non returnable

Cheques made payable to 'Motorsport UK'

Request for Arbitration	£1,005.00

13.6. Fines
(Maximum unless otherwise stated)

Cheques made payable to 'Motorsport UK'

i) Failure to attend Drivers Briefing (G.5.3.8)	£205.00
ii) Contravention of Regulation H.32.2.1	£205.00
iii) Contravention of Regulation C.3.4	£215.00
iv) *Event where there is no Motorsport UK Steward	£215.00
v) *Event where there is a Motorsport UK Steward – International	£10,190.00
vi) *Event where there is a Motorsport UK Steward – all other	£1,045.00
vii)*Tribunal	£58,195.00

* or = to the top cash and/or Ad Valorem award at event whichever be higher.

14 FIA Fees

Motorsport UK acts as the applicant's agent when dealing with the FIA in respect of Calendar Inscription and Track Licence fees which will be converted at the prevailing exchange rate to which a Service Charge, no less than 30%, will be added and invoiced accordingly.

15 Invoice Payment Terms

In the absence of any prior agreement, invoices submitted by Motorsport UK are to be settled no later than 30 days after the invoice date. Failure to do so may attract an interest charge equivalent to 4% above the Bank of England base rate, compounded on a daily basis.

4 Event Permit Fees

A fee will be charged for all events (including practice/training events) for which a permit is issued and includes cover by the event public liability policy. The fee will be applied towards the Motorsport UK's costs of the Insurance policy, including any insurance premium amount, Insurance Premium Tax and any other applicable taxes, and administrative costs. The indemnity limit of the event public liability policy is £100 million, any one accident or incident.

This permit fee will be calculated on the number of competitors signed on and in attendance (per capita) or a flat rate for the event, as detailed opposite.

	Clubmans	*Interclub*	*National*	*International*
AUTOTESTS (Section M)				
Autotest	£11.50	£13.65		
Production Car	£9.75			
AutoSolo	£11.50	£13.65		
CROSS COUNTRY (Section P)				
Trial (Untimed)	£9.85	£12.60		
Safari	£13.25	£13.65	£14.10	
Winch/Team Recovery	£13.25	£13.65		
Hill Rally	£25.20	£25.60	£26.05	
Gymkhana	£9.85			
Promotional Events	£9.85			
Trial (Timed)	£13.25	£13.65		
Tyro Trial	£9.85	£12.60		
Challenge Event	£13.25	£13.65		
Driving Tests	£9.85			
Treasure Hunt	£9.85			
Orienteering/Point to Point	£13.25	£13.65	£14.10	
KARTING (Section U)				
Short Circuit		£14.45	£14.75	£18.70
Long Circuit		£14.45	£14.75	£18.70
Schools	£3.95			
Endurance**	£17.05	£17.95		
Kart Clubman (Tyro)	£12.85	£14.45		
Bambino	£12.85			
CIRCUIT RACING (Section Q)				
Car Race**		£31.00	£34.75	£62.80
Truck Race		£31.00	£34.75	£70.55
Endurance Race**		£35.90	£40.25	£71.05
SPEED (Section S)				
Sprint		£27.50	£27.80	£43.40
Hill Climb		£27.50	£27.80	£43.40
Drag Race		£27.50	£27.80	£43.40
Time Attack Pro		£26.80		
Time Attack Challenge		£23.20		
Practice Day		£23.20		
TRIALS (Section T)				
Sporting	£9.85	£12.60		
Car Trial	£9.85	£12.60		
Classic	£9.85	£12.60		
AUTOCROSS & RALLYCROSS (Section N)				
Autocross/Clubcross	£22.40	£26.95	£27.25	
Rallycross		£26.95	£27.25	£43.45
Off-Road Racing	£22.40	£26.95		
RALLYING (Section R)				
Road Rallies				
Road Timed	£26.45	£27.15		
Road	£13.25	£13.95		
Navigation	£13.25	£13.95		
*Navigational Scatter	£27.00			
*12 Car Rally	£27.00			
Endurance Road	£13.25	£13.95		
Targa Road	£13.25	£13.95		
Historic Road	£13.25	£13.95		£25.75
Economy/Vintage	£13.25	£13.95		
Stage Rallies				
Up to 45 miles		£55.55	£55.85	£72.35
45 miles & over		£81.80	£82.10	£99.75
Single Venue (Multi Use)		£83.35	£83.65	£101.40
Timed Trial		£32.30	£32.60	
Up to 45 miles (Historic)		£55.55	£55.85	£72.35
45 miles & over (Historic)		£81.80	£82.10	£99.75
***CERTIFICATE OF EXEMPTION (Section D)**				
Concours	£27.00			
Gymkhana	£27.00			
Motorsport UK Marshals Training	FREE			
Road Safety	£27.00			
Touring Assembly/Procession	£27.00			
Treasure Hunt	£27.00			
Veteran Run	£27.00			
Other	£27.00			

Please Note:

- *Payment required with applications for Certificate of Exemptions, 12 Car Rallies and Navigational Scatters (flat fee £27.00)
- **Team/Endurance races where two or more drivers share the driving of one vehicle entered, only one per capita fee is required per vehicle.

Appendix 2

Insurance and Motor Competitions

Introduction

1. Motorsport UK effects Master Insurance Policies only in respect of public liability and personal accident risks and this cover applies to all events held under permit or for which an exemption for permit is granted. The policies are arranged through Bluefin Sport, The Paragon, 32-36 Victoria Street, Bristol BS1 6BX. Tel: 0345 872 5060 (Mon to Fri 9am to 5pm).

The following notes are in respect of each of the insured policies. Further details, including a downloadable copy of the Motorsport UK Insurance Policy, are available on the Motorsport UK website.

Public Liability – Information

2. Any person injuring another or damaging another's property as a result of acting negligently may have an action for compensation brought against them. It is for this reason that Motorsport UK has arranged public liability insurance to protect clubs organising events against this potential legal liability. Insurers cannot cover events of whose existence they do not know and for the policies to be effective a club must obtain an appropriate permit or exemption from Motorsport UK and organise the event in accordance with Motorsport UK requirements.

Scope of Cover

3. The policy is arranged to provide indemnity to the level £100,000,000 for any one accident. This is the limit of the Insurer's obligation no matter how many people are injured or how much property damage is done as a result of a single incident or accident. In respect of pollution/contamination claims the limit of the Insurer's liability is £100,000,000 in the aggregate and cover is restricted to sudden, unintended and unexpected pollution.

The costs of defending Clubs against allegations likely to be the subject of indemnity under the policy are also met by Insurers. They will of course take over the control and conduct of that defence.

The first £450 of any claim for damage to property will be the responsibility of the club and this deductable amount is payable in respect of each and every accident which gives rise to a claim. Where prior experience indicates that a heavy claims exposure exists the deductable amount may be increased, but not without prior notification to the club concerned.

Who is Protected?

4. The Master Policy protects an organising or promoting club and its officials for their potential legal liability to third parties injured or whose property is damaged following an accident arising from the holding of an event. This term includes official practice and associated activities necessary to an event (such as setting up a course for a speed or rally event). The cover

MOTORSPORT
INSURANCE

WE'LL KEEP YOU ON TRACK

Grove & Dean Motorsport Insurance is one of Europe's premier on-track insurers for professional GT, Sports, Historic and Single Seater racing cars.

With a choice of bespoke European and international policies, a dedicated team and an in-house Claims Manager to take the hassle out of any incidents, you can rely on Grove & Dean Motorsport Insurance.

Our cover keeps you on track.

Policy Options Include:

On-Track Cover

Track / Test Day Cover

Storage & Transit Cover

Personal Accident Cover

*Discounts for multi-event and annual policies**

**Subject to underwriting criteria*

Knowledgeable staff Open 7 days a week

+44 (0)1708 606768

www.grove-dean-motorsport.com

grove&dean MOTORSPORT INSURANCE

Grove & Dean Motorsport Insurance is a trading name of Grove & Dean Ltd, an independent intermediary who are authorised and regulated by the Financial Conduct Authority (FCA). For your security calls may be recorded.

additionally protects officials (not necessarily officials of an organising club), or sponsors of an event or of races or championships, within the event. Competitors and Venue landowners are also covered but not one competitor claiming against another competitor.

What is Protected?

5. Events arranged by Clubs held under a Motorsport UK Permit or Certificate of Exemption.

Marshals' training days are covered subject to prior notification being made to and approval given by Motorsport UK.

Approval may be given for the demonstration of vehicles subject to a specific application being made and written approval being given by Motorsport UK.

What is not Protected?

6. Events not held under Permit or Certificate of Exemption are not covered, neither are any Record Attempts nor activities other than the normal competition.

As part of the master liability policy member clubs are covered for their legal liability to third parties arising from their social activities. These activities encompass social evenings, award ceremonies and other like gatherings. This extension DOES NOT cover claims arising from the following:

1) Hazardous and dangerous activities (except in an attempt to save human life).
2) Use of pyrotechnics and explosives.
3) Overseas activities.
4) Participation in actual Motorsport.
5) Commercial activities on behalf of the promoter for gain/profit excepting raffles and prize draws or similar.
6) Employers Liability and Errors or Ommissions.
7) Liability for bona fide sub-contractors.
8) Claims more specifically insured by the other existing policies.
9) Damage to vehicles used by the organisers is not covered.
10) The policy provides no protection in respect of aviation incidents.

Liabilities arising from the use of vehicles on the public road are not insured under the public liability policy. If this cover is required application should be made to Bluefin Sport who will be able to offer facilities to insure the exposure.

Events abroad are not covered without special arrangement and approval being sought through Bluefin Sport.

Insurance policies are subject to specific terms and conditions. Thus if there is any doubt at all whether any activity or aspect of cover is insured or not it is important that you refer to Bluefin Sport for clarification.

Are Competitors Covered?

7. The term competitor is used in its widest sense to describe drivers, entrants, sponsors of individual competitors and where appropriate passengers.

Where events occur on private land, i.e. where the insurance provisions of the Road Traffic Act do not apply, competitors are protected by Motorsport UK's public liability insurance.

It is impractical for Motorsport UK to provide competitors with cover where any part of an event takes place on the public highway in circumstances to which the Road Traffic Act applies. To cover liability under the Road Traffic Act, competitors are expected to make their own arrangements by the extension of existing motor policies. However, Bluefin Sport are in a position to assist clubs organising rallies to provide Road Traffic Act cover.

However, this insurance does not protect competitors in respect of liability to mechanics or other helpers forming part of the same entry nor do they protect mechanics, entrants or sponsors in respect of claims by the driver. Claims by one competitor against another actually competing in the same event are excluded.

Damage to participants competition vehicles whether caused during periods of competition or otherwise is not covered.

Are Landowners Covered?

8. The Motorsport UK Master Policy indemnifies landowners in respect of their potential legal liability to third parties following an accident in connection with an event for which they have loaned the use of their land. This indemnity is to deal with the risk that an allegation is made after an accident that the cause was due to some defect in the landowner's premises.

The Motorsport UK public liability policy will only normally pay for damage to a landowner's property if it is considered that the club has been in some way at fault and has a legal liability.

The policy is specific in not providing cover for damage to safety barriers, marshal posts, other course installations and damage to road and land surfaces.

Contractual Liability?

9. Contractual Liability is the term used in Insurance policies to indicate an obligation accepted by one of the two contracting parties which goes beyond the position that would exist otherwise under the common law of negligence. Insurers exclude such obligations because they do not wish to be bound under their policy by any prior commitment unless they have been given notice of the commitment and agreed to it. Please refer to Bluefin Sport for any specific clarification.

If obligations are undertaken under contract in respect of damage to other property e.g. hired public address equipment, armco barriers or advertising hoardings then the liability cover offered under the Master Policy will only operate to the extent to which it is judged you may have a legal liability under the common law in negligence.

Under normal circumstances any extension of cover will not include inevitable damage to road and land surfaces. Clubs are expected to take reasonable measures to protect vulnerable property, especially any property of high value which might be subject to damage.

Medical Malpractice

10. The Master Liability policy is automatically extended to provide medical malpractice cover for volunteer Junior Doctors and paramedics registered with the HCPC and volunteer medical assistants including nurses registered with Motorsport UK, attending Motorsport UK authorised events. The limit of indemnity is £10,000,000 in the aggregate and the cover is subject to a deductable amount of £450 each and every claim.

motorsport insurance specialists

On-Track Accident Damage Cover
Motorsport Commercial & Liability
Road Insurance for Rally, Race, Sports, High Performance & Modified Cars
Insurance for Event Organisers
Personal Accident & Travel
Storage & Transit Cover for Non Road Legal Vehicles

0115 965 1020
On-Track Accident Damage
Motorsport Vehicles, Competition and Sports Cars

0115 965 1050
Commercial Policies, Liability Cover and Personal Accident

reis motorsport insurance

www.reis.co.uk
contact@reis.co.uk

Reis Motorsport Insurance is a trading name of Insurance Factory Limited.
Insurance Factory Limited is authorised and regulated by the Financial Conduct Authority (No. 306164).
Registered Office: 45 Westerham Road, Sevenoaks, Kent TN13 2QB.

Public Liability – Action Plan

11. In order that clubs may be certain that cover is in place for any given event the following are the steps that are to be taken:

(a) Apply to Motorsport UK for an appropriate Permit or Certificate of Exemption.

(b) Consider if specific advice is needed from Bluefin Sport
- o Activities other than normal competition, or those specifically approved by Motorsport UK
- o Contractual liabilities incurred to property owners or landlords
- o Where cover under the Road Traffic Act is required.

(c) If special exposures to risks not covered in the standard Motorsport UK liability insurance exist such as in (b) above then full details should be made available to Bluefin Sport in good time for them to respond on the nature of the cover required and its costs.

Claims

12. In the event of any accident involving injury to a spectator or official, or damage to third party property, a full report must be made to Motorsport UK as soon as possible. There must be no discussions or correspondence whatsoever regarding the incident other than to confirm that the facts are being reported to Motorsport UK. Delay in reporting could result in the Insurer's refusal to deal with a claim if their position had been prejudiced by delayed notification or by settlement or commitment having been made. In the unlikely event of an injury being fatal, this report must be made by telephone, at the earliest possible opportunity. These requirements also apply to serious or potentially fatal accidents.

In the case of accidents involving spectators or their property it is important that the names and addresses of any witnesses are obtained and also those of marshals stationed in the vicinity of the accident.

After an incident organisers or individuals may receive a letter from a solicitor which should take the form of 2 copies of a 'letter before action'. Such letters should not be acknowledged or replied to but must immediately be sent to Motorsport UK. Insurers will then have 21 days to acknowledge receipt of the 'letter of action' followed by a period of 90 days to investigate the claim and make a decision on liability.

Failure to meet these deadlines can result in judgment by default with the attendant adverse penalties and cost accruing to the defendant.

Personal Accident

13. The duties of many officials take them close to the "scene of the action" and consequently into an area of relatively greater risk. Officials voluntarily carry out their duties and legally thereby accept the additional risk inherent in the duty which limits any remedy at law available to the official should injury occur.

PLEASE DO NOT DELAY IF ANY INTIMATION OF A CLAIM IS MADE AGAINST YOU.

Officials

14. Recognising this Motorsport UK has effected personal accident insurance applying at events held under Permit or Certificate of Exemption. Personal accident policies pay the pre-agreed levels of benefit to persons injured if an accident occurs within the terms and conditions of the policy.

Who is Covered?

15. All signed-on officials at events held under Permit or Certificate of Exemption, including set-up and dismantling. The signing-on of officials at events is extremely important in that one of the purposes of this is to identify a person as an official of the event and consequently establish the right to benefit under this personal accident policy. Cover for officials include travelling directly from home to an event and directly back home again from the event.

What are the Benefits?

16. The benefits payable under the Personal Accident Policy are detailed on the Motorsport UK website.

Competition Licence Holders

17. In addition to covering officials Motorsport UK has arranged automatic cover for all Competition Licence holders.

This personal accident insurance cover is valid from the date of issue of the competition licence or the First of January of the relevant licence year, whichever is the later. It is operative during any competition and/or official practice session at an event run under a permit issued by Motorsport UK or for which a Certificate of Exemption has been issued or run in accordance with the International Sporting Code of the FIA, under the authority of an FIA recognised ASN.

What are the Benefits?

18. The benefits payable under the Personal Accident Policy are detailed on the Motorsport UK website.

The standard benefits provided by Motorsport UK may be enhanced at favorable terms by direct application to Bluefin Sport.

Who is Covered?

19. All signed-on Motorsport UK Competition Licence holders at events held under a Permit or Certificate of Exemption. The cover applies while signed-on under Regulation H.33.1 or for any International or National event held in accordance with Article 2.2 and/or 2.3 of the FIA International Sporting Code.

General Notes

The following are general points where experience has shown it is helpful to give guidance to members.

Competitors or Clubs competing abroad

20. It is recommended that competitors or Clubs competing abroad review their insurance arrangements, with Bluefin Sport.

Foreign Competitors in the UK

21. The National Health Service has financial restrictions on treating some foreign nationals after an accident. Unless the country of origin has an agreement with the UK, foreign competitors are strongly recommended to take out medical insurance before competing here. Organisers should draw this to the attention of foreign competitors.

"THE TRACK IS MY CANVAS, THE CAR IS MY BRUSH"

GRAHAM HILL

SOMETIMES ALL YOU NEED IS A GOOD QUOTE.

Track Day Cover - Laid-up Cover Including in Transit
Trailer/Transporter Insurance - In-between Events Road Cover

We're in pole position when it comes to motorsport insurance cover, call us today for a great personalised rate...
0800 085 6186 or visit **adrianflux.co.uk/motorsport**

ADRIAN FLUX
MOTORSPORT

Authorised and regulated by the
Financial Conduct Authority

Social Events

22. The Motorsport UK's Master Policies provide cover for some club social activities (6).

Marshals' Training

23. Marshals' training days are, subject to prior notification and approval by Motorsport UK, covered under both the Public Liability and the Personal Accident (officials) Policies without charge. The organisers are required to obtain a Certificate of Exemption from Motorsport UK.

Standard Motor Policies

24. A Standard Motor Policy issued in the UK market excludes use for "racing, pacemaking, reliability trials, speed testing or rallies". While the competitor may be able to obtain extension of his policy this is a matter for individual negotiation between the competitor and his insurer.

Any competitor in any event that involves use of the public highway should, in his own interest, pay particular attention to insurance. He should always, before entering an event involving use on the public highway, obtain confirmation from his insurers that his normal policy operates. Where Rallies or Trials include special tests full details of these tests should be submitted to the Insurer.

Competitors are reminded of the declaration they are required to make when entering an event. Facilities are available to Clubs to provide short period third party liability cover to drivers in Rallies through Bluefin Sport.

Events on Public Roads

Road Rallies

25. In respect of Road Rallies timed to less than a minute, the higher rate detailed in Part 3, Appendix 1. 5.5. does not apply in respect of Regularity events or events where one section, not exceeding 10 miles in length, is included solely for the purpose of tie deciding.

Closed Road Events

26. Competitor's legal liability cover can only be given for events run on closed public roads when such roads are closed by a properly enacted Order made under the authority of a statute permitting the closure of a public road or roads for the purpose of a competition, whether such competition involves simultaneous competition or timing against the clock, and suspending the operation of normal Road Traffic Legislation.

Insurance Fees

27. The quoted Per Capita Permit Fees are based on a meeting of one day's duration. Insurers reserve the right to make an increased charge in respect of meetings occupying more than one day to which the public is admitted, and a charge made or where competitions counting towards the final result take place on each day. The Per Capita Permit Fees provide cover in respect of the permitted competition and official practice sessions.

Officials working at Overseas Events

28. Motorsport UK has now had agreement to cover UK licence officials when they are providing their services at overseas events subject to the following conditions:

1. They have notified Motorsport UK in writing using the Overseas Insurance Application form of their intention at least 30 days prior to the event and Motorsport UK have acknowledged accordingly.
2. The event they are attending is sanctioned by the ASN of that country who like Motorsport UK are recognised by the FIA in that capacity. No cover is given for any non-affiliated events.
3. That the official shall take out their own travel insurance for any incidents that occur away from the event venue.
4. That the country where the event is taking place is not on the sanctioned list (see www.motorsportuk.org)
5. In respect of officials attending event in the United States of America and Canada, the cover is subject to restrictions as shown below.

Summary Of Cover

Personal Accident

1. Cover will match the existing master arrangements in place for officials under the Motorsport UK master policy.
2. Cover would be secondary to any other valid cover or collectibles.
3. Medical Expenses and Repatriation benefit to £50,000 for all non-European exposure.

Third Party (Public Liability)

1. Cover will match the existing master arrangements in place for officials under the Motorsport UK master policy.
2. Cover would be secondary to any other valid policy.
3. The cover is strictly limited to Europe.

Professional Indemnity

1. Cover will match the existing master arrangements in place for officials under the Motorsport UK master policy.
2. Cover would be secondary to any other valid policy.
3. The cover is strictly limited to Europe.

Appendix 3

Competing Abroad

This brief outline is designed to help competitors and officials avoid problems which can be associated with competing at events overseas.

General

Use this checklist if you are planning to compete abroad:

- Is the event on the FIA International Calendar (or the respective ASN's National Calendar), otherwise it could be a long trip for nothing.
- Have you got the right Competition Licence (International Driver and Entrant Licence or EU Licence, as appropriate)
- If you are taking any banned substance on the current WADA list, a TUE is only required PRIOR to competition for drivers who are competing in FIA International events. Please contact Motorsport UK for further instructions.
- Have you 'permission to start'. Entry Forms often require the stamp of approval of your National Sporting Authority (Motorsport UK). Your International Licence is also your 'Visa' authorising you to compete abroad. In case of doubt, Motorsport UK can always stamp your entry form, but don't leave it until the last minute before the closing date for entries.
- Is/are your Licence(s) signed
- Do the Regulations call for you to take passport size photographs for event identification
- Do the Organisers require any specific paperwork, identification or information
- Do you have the right homologation/identity papers/log book.

European Events

Holders of National or International Licences may compete in events that are published on the respective ASN's National Calendar. They do so under the regulations for that event and under the jurisdiction of the appropriate ASN (National Sporting Authority).

These events will not be on the International Calendar.

Travelling Arrangements

Taking competition cars and spares across international borders can be a fraught business and very time consuming. Allow enough time and ensure that your papers are arranged in advance. Ensure any required carnets are in order.

Personal Arrangements

- Take your Driving Licence even if you are the Co-Driver; many foreign countries insist on seeing this whether you are intending to drive or not. You may be refused the start without it
- Find out if the countries you are visiting require an International Driving Permit
- It is essential to have Green Card Insurance to protect yourself. In some countries an additional 'Bail Bond' cover is essential. (NB UK Third Party Fire and Theft cover is not necessarily valid abroad.) Always check with your motor insurer that your UK cover is valid in the country you are visiting
- Take the vehicle registration documents or an authority from the vehicle owner that you are entitled to be driving it (eg in the case of a company vehicle)
- Particularly with large or trailered vehicles, check that you are allowed to travel on the roads during weekends or public holidays (eg in France, Italy and Germany)
- Find out if you need a Travel Visa for the countries you are visiting
- Include your 'UK' plates
- Check which, if any, inoculations are necessary for each country you are visiting
- Take out Medical Insurance that covers you during an event as well as before and after.

At the time of going to print the UK's relationship with the EU remained uncertain. Whilst much of the advice below remains valid, you are advised to check with the latest advice below

https://www.gov.uk/visit-europe-1-january-2021

- Check what emergency equipment you need to carry. Bulb kits, fire extinguishers, warning triangles and reflective clothing for example are mandatory in many countries.
- Make sure your vehicle's lighting complies with the requirements for the countries visited.

Vehicles/Spares

When crossing any international border, particularly outside the EU, ensure you can account for all equipment, including trailers, trailered vehicles and spares. This should be done on entry and exit. Customs officers will need to ensure that you take out what you took in and any missing items are considered as having been sold and therefore could be liable for tax.

Some countries accept a list of equipment and spares deposited on arrival and cleared on departure at the same post (if you are sensible). Other countries, particularly, in the case of race vehicles and trailered equipment, require formal 'Carnet' documents with Bank Guarantees to the value of the equipment.

Lack of paperwork on arrival at a customs post could mean a fine in addition to delays. Even clearing Customs on entry without being checked does not mean you are clear; you will have to exit the country and you also may be subjected to roadside checks.

In general the more paperwork you carry the better. It can help to have paperwork for the event or an invitation or acceptance to compete to reassure Customs that your visit is genuine. Take duplicates or copies of all papers with you, and perhaps copies of the original invoices for the vehicles and spares to reduce the possibility of a VAT investigation on re-entry into the UK.

(Carnet de Passage) and more information can be obtained from: The RAC, The AA, Chamber of Commerce (ATA Carnet), Freight Transport Association (Owner Document Road Permit), HM Revenue and Customs. The motoring organisations may be able to offer both Personal and Vehicle Protection bonds in case of accident. Check out their schemes.

Community Movement Carnets

These are no longer required for movement between and through countries which are full members of the EU. This does not mean that you won't be stopped and asked to explain exactly what you have on board, so it is still a good idea to have some form of documentation to prove ownership.

Motorsport UK

OPEN
Monday – Friday
9.00–17.00

Tel: 01753 765000

Membership Team:
Tel: 01753 765050

Website:
www.motorsportuk.org

Appendix 4

Judicial Notes for Guidance

The Machinery of Justice

This appendix is not part of these Regulations and is not mandatory but is intended to assist competitors when becoming involved in or contemplating becoming involved in Motorsport UK judicial procedures. It gives an explanation of the course of any judicial procedure and must be read in conjunction with Section C – Judicial.

1. The three main Judicial Bodies, in order of progression, are, the Clerk of the Course, the Stewards of the Meeting and the National Court. At most events there should be three Stewards of the Meeting. The club organising an event is responsible for appointing the Stewards, although at all Race, Speed, Kart, Stage Rally and some other events, Motorsport UK appoints the Chief Steward. The Motorsport UK list of Stewards comprises of people who have considerable experience of Motor Sport, and who usually have acted as Club appointed Stewards for a number of years. They are, however, independent, and are not employed by Motorsport UK. In order to ensure impartiality, any Steward finding they have any connection with a party to a hearing or with the subject matter of a hearing must declare a possible conflict of interest. Unless all parties agree otherwise, then that Steward must withdraw.

The National Court is appointed by Motorsport UK and the members are usually either senior Motorsport UK Stewards, members of one of the specialist Committees or other experienced people who are independent of Motorsport UK. The Chairman of the National Court will usually be a person who is legally qualified. The Court is administered by an independent external lawyer.

Clerk of the Course

2. With the exception of short circuit kart race meetings (U21), the Clerk of the Course is the first judicial authority in any competition and deals with any protests from Competitors or adverse reports from Observers, Scrutineers or Technical Commissioners, Judges of Fact, etc. Whenever possible Competitors should be given the opportunity to explain their side of the matter, and after considering all relevant reports, the Clerk of the Course will make a decision.

The various time limits for lodging Protests are given in C.5.2. These may be extended by the Clerk of the Course in exceptional circumstances. Joint Protests are not accepted, but more than one individual Protest may be accepted on the same grounds. Protests must be in writing, signed and accompanied by the appropriate fee.

The Clerk of the Course's decision will normally be given verbally, and confirmed in writing. If an offence is found to have been committed, the Clerk should state which rules have been breached, what actions or penalties have been applied. and the time that the verbal decision was notified to the Competitor. The Competitor concerned has 30 minutes if he wishes to Appeal against the Clerk's decision. Any Appeal, which must be in writing and accompanied by the appropriate deposit, will be heard as soon as practicable by the Stewards of the Meeting.

Stewards of the Meeting

3. With the exception of short circuit kart race meetings (U21) the Stewards of the Meeting are the second judicial body at any competition. They will hear any Appeals arising out of a decision of the Clerk of the Course or of any other Official of the meeting. The Stewards decision will normally be final, and can only be appealed to the National Court. in accordance with C.7.1.

The National Court

4. The National Court normally sits at the Motorsport UK offices at Bicester, but it can meet at other venues at Motorsport UK's discretion. The press and other observers are not permitted to attend. Any hearing can proceed in the absence of any party or witnesses, provided that sufficient notice of the hearing has been given.

Appeal Hearings

- These hear appeals from decisions made by Stewards of a Meeting. The Court is obliged to confine its decisions to matters actually appealed, though they are free also to make recommendations to Motorsport UK arising out of their deliberations. They have the power to review and amend any penalty previously applied.
- Prior to the start of an Appeal Hearing, the Court members and all parties will be given a dossier incorporating the original protest or complaint, any reports or sketches etc produced at the original Hearing, the notes or transcript (if any) of the Stewards' Hearing the Stewards' report and the original findings.
- Normally the Court first hears the Appellant's case, with witnesses called and cross-examined if necessary. The respondent follows, calling witnesses who may also be cross-examined. The respondent and appellant can then make a final address if desired. In the case of a partial or complete re-hearing however, the Court can change the order of the hearing.
- The Court then adjourns to consider its decision, which is given verbally to the parties and confirmed in writing. The Court may also order the Return of the Appeal Fee if the Appeal has been successful, or its forfeiture if the Appeal has failed. An allocation of costs may be made if appropriate. Exceptionally judgement can be reserved.

Disciplinary Hearings

These are held to try cases brought before the Court by Motorsport UK for alleged breaches of rules by persons or groups subject to these Regulations.

Disciplinary hearings have two primary functions:

- To determine whether or not the breach is proved (unless the matter has been referred to them for the application of an additional penalty); and
- If so, to impose the appropriate penalty.

Procedure at Disciplinary Hearings involves The Clerk to the Court bringing in the main parties and briefly stating the purpose of the Hearing. The alleged breach is read to the party and the party issues a plea to each charge. If the party accepts the charge, proceedings may be shortened and mitigation considered.

- If the party contests the charge, the prosecution proceeds first, summarising its case. Prosecution witnesses may be cross-examined by the defence, and re-examined by the prosecution. The defence then presents its evidence, defence witnesses being cross examined and re-examined in turn. All witnesses may be questioned by members of the Court. The prosecution and defence can then address The Court, summarising the evidence, before the Court adjourns to determine its decision. No person, other than the Clerk to the Court if required, can be present or enter discussions with the Court at this stage.
- If the Court finds the charge(s) have not been proved, it will dismiss the case. If any of the charges are, proved, the Court will announce whether a penalty is to be imposed, and the nature of the penalty. The Court has full discretion to award and allocate costs as it thinks fit.

Investigatory Hearings

- These are held under Regulation C.9 to enquire into matters referred to the Court by Motorsport UK.
- The Court is free to receive evidence and to hear witnesses as they wish. They can make such order as it deems appropriate including, for example, amendment to the results of a competition, or recommendations to Motorsport UK, and if a breach of the Regulations has occurred either impose an appropriate penalty or refer the matter to a subsequent Disciplinary Hearing. The Court has full discretion to award and allocate costs as it thinks fit.

Technical Eligibility Appeals

These are dealt with entirely by written submissions in accordance with the procedure laid down in C.7.2.

- If a Competitor wishes to Appeal in respect of an eligibility ruling or penalty under C.3.5.1.(c) or 3.5.3, confirmation of lodging the Appeal, together with the grounds of Appeal must be submitted to the Clerk to the National Court in writing within ten days. Within the same period, the Technical Commissioners concerned must also submit their reasons for coming to their decision, quoting the relevant regulation numbers, dimensions etc as appropriate. Copies of these submissions will be sent to the opposing parties, who will then be allowed a further ten days for written comments.
- The National Court will then consider all these submissions, plus any other appropriate exhibits, and will adjudicate on the matter. The Decision will be notified to all parties in writing. The Court will also decide whether the Appeal fee should be returned or forfeited, and may also allocate costs if appropriate.

Anti-Doping Hearing

- The Anti-Doping Regulations are detailed in H.38.1.

Anti-Alcohol Hearing

- The Anti-Alcohol Regulations are detailed in H.38.2.

Witnesses and Examination

5. Witnesses are not required to give evidence on oath. They may be examined by the party calling them, and shall give evidence directly and/or by answering questions.

- Documents may be produced in evidence: in such case the Hearing must be satisfied as to their source, validity, relevance etc., and to do so it may be necessary to call direct evidence in this respect. It should be remembered that documents on their own may not be accepted without corroboration.
- A report from any official that has been produced, and has later been open to challenge at the original Stewards' Hearing is acceptable, but should not be amplified later unless that official is attending as a witness.
- Data logged evidence, video and other photographic evidence may be considered by Clerks of the Course, Stewards or the National Court, providing they are satisfied as to its authenticity, and in all circumstances at their sole discretion. Where data logged evidence is to be used, must only be presented or validated by an independent person qualified to do so (J.5.21).
- Prior to the hearing of an Appeal each party is required to specify to all other parties, details of all reports, documents, objects, photographs or recordings which are to be used at the hearing. All parties must have the opportunity of inspecting any or all of the items detailed in the list, prior to the hearing if requested
- Objects may be put in evidence, as for instance, the cylinder head in question.
- Recorded witness evidence, in the form of electronic voice and/ or video recordings, should be admitted as evidence by Clerks of the Course, Stewards or the National Court, provided they are satisfied as to its authenticity. Unless otherwise agreed by the parties involved, the witness should attend the hearing so they can be examined on the recorded evidence. In all cases, the admissibility of recorded evidence and the weight to be attached to such evidence (particularly if the witness is not present) is at the sole discretion of the Judicial Body.

Degree of Proof

6. The degree of proof required is what is more probable i.e. the balance of probability. Although some sporting or social stigma may accrue to persons found to have been in breach of the Regulations of a sporting body, it is not sufficient to justify the necessity of proof beyond reasonable doubt.

Appendix 5a

Forestry Liaison Officers and Forestry Commission District Offices

Motorsport UK has appointed FLOs to each Forestry Commission District in England and Wales and to the Regions in Scotland to provide a liaison between Organising Clubs, Motorsport UK and the Forestry Commission. The FLOs and the areas for which they are responsible are given below.

The detailed Regulations regarding the arrangements for the authorisation of events seeking use of the Forestry Commission's land are available from Motorsport UK. However, it is important that Clubs who are seeking usages DO NOT contact the Forestry Commission direct, but should channel their enquiries through the FLOs who will give guidance as to likely availability and specific problems on the use of particular forests.

National Forestry Organisations

England

Forestry England
620 Bristol Business Park, Coldharbour Lane, Bristol, BS16 1EJ
☎ 0300 067 4900
Email: fe.england@forestryengland.uk

East England
Santon Downham, Brandon,Suffolk, IP27 0TJ
☎ 0300 067 4500
Email: enquiries.eastfd@forestryengland.uk

West England
Bank House, Bank Street, Coleford, Glos. GL16 8BA
☎ 0300 067 4800
Email: westengland@forestryengland.uk

Westonbirt, The National Arboretum
Tetbury, Gloucestershire, GL8 8QS
☎ 0300 067 4890
Email: westonbirt@forestryengland.uk

North England
Eals Burn, Bellingham, Hexham, Northumberland, NE48 2HP
☎ 0300 067 4200
Email: enquiries.northengland@forestryengland.uk

South England
The Queen's House, Lyndhurst, Hants., SO43 7NH
☎ 0300 067 4600
Email: southern.enquiries@forestryengland.uk

Yorkshire
Outgang Road, Pickering, North Yorks, YO18 7EL
☎ 0300 067 4300
Email: yorkshirefd@forestryengland.uk

Central England
Sherwood Pines Forest Park, Edwinstowe, Mansfield, Notts, NG21 9JL
☎ 0300 067 4340
Email:central.district@forestryengland.uk

Forestry Liaison Officers

1. Motorsport UK
   Email: rally@motorsportuk.org
   (Districts: Central)
2. Barry Guess, 8 Bethel Lane, Upper Hale, Farnham, Surrey GU9 0QA.
   ☎ (h): 01252 727390
   Email: barrygcharlie@aol.com
   (District: South England)
3. Robin Hernaman, 19 Church Street, Ashley, Newmarket, Suffolk CB8 9DU.
   ☎ (h): 01638 731501
   Email: robinhernaman@gmail.com
   (District: East England)
4. Ronnie Sandham
   ☎ (h): 01524 822574 ☎ (m): 07778 007044
   Email: rsandham@gmail.com
   (District: North England)
5. Barry Guess, 8 Bethel Lane, Upper Hale, Farnham, Surrey GU9 0QA.
   ☎ (h): 01252 727390
   Email: barrygcharlie@aol.com863116
   (District: East England)
6. Rod Parkin, 15 Holly Drive, Tinshill Lane, Leeds LS16 6EF.
   ☎ (h): 0113 2262422 ☎ (m): 07850 783555
   Email: rodparkin7@gmail.com
   (District: Yorkshire)
7. John Parker, 1 Woodend, Ponteland, Newcastle-upon-Tyne, Tyne & Wear NE20 9ES.
   ☎ (w): 01661 824692 ☎ (m): 07885 804545
   Email: jparally@googlemail.com
   (District: North England)
8. Kevin Witton, 56 Harper Avenue, Wednesfield, Wolverhampton WV11 1HA.
   ☎ (m): 07767 453664
   Email: kevin.witton@rallyonline.co.uk
   (District: West England)
9. Chris House, Brindham Farm, Wick, Glastonbury, Somerset BA6 8JR.
   ☎ (w): 01458 831130 ☎ (h): 01458 833348
   Email: christopher.house@btinternet.com
   (District: West England)

Wales

Natural Resources Wales

David Liddy
Email: david.liddy@naturalresourceswales.gov.uk and david.liddy@cyfoethnaturiolcymru.gov.uk

North East

Glen Williams
Clawdd Newydd, Ruthin, Denbighshire, LL15 2NL

North West

Einear Jones
Gwydyr Uchaf, Llanrwst, Conwy, LL26 0PN

Mid

Sarah Hurford
NRW Office, Powells Place, Powells Lanes, Welshpool, Powys, SY21 7JY

South West

Michelle Jones
NRW Office, Llanfair Road, Llandovery, Carmarthenshire, SA20 0AL

South Central

Karen Wills
NRW Office, Resolven, Neath, West Glamorgan, SA11 4DR

South East

Tanya Dykes
NRW Office, Hadnock Road, Monmouth, Monmouthshire, NP25 3NQ

Forestry Liaison Officers

11. Keith Ashley, 8 Hither Bush, Lyde, Hereford HR4 8EF.
☎ (h): 01432 272977
Email: ka@coronetsteels.co.uk

(Districts: Llandovery, Coed y Cymoedd)

12. Kevin Witton, 56 Harper Avenue, Wednesfield, Wolverhampton WV11 1HA
☎ (m) 07767 453664
Email: kevin.witton@rallyonline.co.uk

(Districts: Coed y Gororau, Coed y Mynydd)

MOD Liaison Officer – Wales

Chris Phillips
Maes Coed, Bowling Green Lane, Talgarth, Powys LD3 0HF
☎ (h) 01874 711980 ☎ (m) 07307 877750
Email: bronant.phillips@gmail.com

Scotland

Forestry and Land Scotland

1 Highlander Way, Inverness Business Park, Inverness, IV2 7GB.
☎ 0300 067 6000.

North

Golspie Office, Golspie Business Park, Golspie, KW10 6UB 0131 370 5970

Smithton Office, Smithton, Invernees, IV2 7NL
☎ 0131 370 5965
Email: enquiries.north@forestryandland.gov.scot

West

Lochgilphead Office, Whitegates, Lochgilphead,PA31 8RS
☎ 0131 370 5700

Fort William Office, Torlundy, Fort William, PH33 6SW
☎ 0131 370 5700
Email: enquiries.west@forestryandland.gov.scot

East

Huntly Office, Portsoy Road, Huntly, AB54 4SJ
☎ 0131 370 5100

Dunkeld Office, Inverpark, Dunkeld, PH8 0JR
☎ 0131 370 5436
Email: enquiries.east@forestryandland.gov.scot

Central

Aberfoyle Office, Aberfoyle, Stirling, FK8 3UX
☎ 0131 370 5674
West Calder Office, Five Sisters House, West Calder, EH55 8PN
☎ 0131 370 5680
Email: enquiries.central@forestryandland.gov.scot

South

Dumfries Office, Ae Village, Parkgate, Dumfries, DG1 1QB
☎ 0131 370 5500

Newton Stewart Office, Creebridge, Newton Stewart, DG8 6AJ
☎ 0131 370 5900
Email: enquiries.south@forestryandland.gov.scot

Forestry Liaison Officer for Scotland

Jonathan Lord, PO Box 3333, Glasgow G20 2AX.
☎ (w): 0141 946 5045 ☎ (m): 07774 788844
Email: jcl@rsacmotorsport.com

Appendix 5b

Route Liaison Officers

Avon & Somerset: James How, Meadowsweet, Tolland, Lydeard, Taunton, Somerset TA4 3PR.
☎ (h) 01984 667814.
Email: jthcodriver@btinternet.com

Bedfordshire: Dave J. Smith, 18 Alameda Road, Ampthill, Bedfordshire MK45 2LA.
☎ (h) 01525 404638 ☎ (m) 07889 976951.
Email: mom106p@aol.com

Cambridgeshire: Clive Grounds, 19 Youngman Avenue, Histon, Cambridge CB24 9HP.
☎ (h) 01223 232861 ☎ (m) 07860 461670.
Email: clive@grounds.org.uk

Cheshire: Gordon Pirie, 73 Liverpool Road, Great Sankey, Warrington, Cheshire, WA5 1QW.
☎ (m) 07974 479297
Email: GordonPirie30@msn.com

Channel Islands: Refer to Simon Fowler at Motorsport UK.

City of London: N/A.

Cleveland: North of the River Tees – See Durham
South of the River Tees – See North Yorkshire.

Cumbria: Fred Bent, Orchard House, Borwick Road, Arkholme, Carnforth, Lancashire LA6 1BG.
☎ (h) 01524 221933 ☎ (m) 07732 123399.
Email: fredbent121@gmail.com

Derbyshire: Glyn Byard, 60 Broadway, Swanwick, Alfreton, Derbyshire DE55 1AJ.
☎ (h) 01773 606753 ☎ (m) 07836 787918.
Email: rallygb.rlo@btinternet.com

Devon & Cornwall: Bob Challacombe, The Firs, 11 Nurseries Close, Exeter, Devon, EX3 0PG.
☎ (h) 01392 877111
Email: bobchallacombe@btinternet.com

Dorset: See Wiltshire.

Durham: Andrew Whittaker, 16 Erskine Road, South Shields, Tyne & Wear, NE33 2TQ.
☎ (h) 0191 455 4420. ☎ (m) 07544 107525
Email: andrew.whitaker1@blueyonder.co.uk

Dyfed Powys: Andrew Thomson, Murmur Y Coed Henllan, Llandysul Ceredigion SA44 5TE.
☎ (h) 01559 371167 ☎ (m) 07772 148937
Email: andrewthomson485@btinternet.com

Essex: Ted O'Day, 8 Tower Road, Epping, Essex, CM16 5EL.
☎ (h) 01992 573 422 ☎ (m) 07802 447022
Email: ted.oday@btinternet.com

Gloucestershire: Martin Saunders, 6 Notgrove Close, Cheltenham, Gloucestershire GL51 6BB.
☎ (h) 01242 464199 ☎ (m) 07798 584713
Email: ted163@gmail.com

Greater London: refer to Simon Fowler at Motorsport UK.

Greater Manchester: See Cheshire.

Gwent: See Dyfed Powys.

Hampshire: Mike Hall, 10 Orchard Close, Woolhampton, Reading, Berkshire, RG7 5SD.
☎ (h) 01189 712747 ☎ (m) 07774 951937.
Email: mike1947hall@outlook.com

Hertfordshire: See Bedfordshire.

Humberside (North): See Yorkshire (North).

Humberside (South): See Lincolnshire.

Isle of Man: Juan Turner, 22 Park Close, Glen Vine, Isle of Man, IM4 4HB.
☎ 01624 852555, 07399 006363
Email: mail@juanturner.com

Kent: Roger Keene, 39 New Road, London SE2 0QH
☎ (h) 0208 310 2699 Email: qqwerty30@hotmail.com

Lancashire: Chris Woodcock, 234 Shear Brow, Blackburn, Lancashire, BB1 8DS.
☎ (h) 01254 681350, 07973 830695
Email: chris.woodcock99@gmail.com

Leicestershire and Rutland: See Northamptonshire.

Lincolnshire: Gerry Blythe, Lekeburn, 27 Kenwick Road, Louth, Lincolnshire, LN11 8EH.
☎ (h) 01507 606981
Email: gerry.blythe@lekeburn.co.uk

Merseyside: See Cheshire.

Norfolk: Pat Ward, 47 Sterlet Grove, Mulbarton, Norwich, NR14 8FU.
☎ (m) 07880 703568 Email: pjwrace@gmail.com

Northamptonshire: Nigel Evans, 29 Icknield Drive, West Hunsbury, Northamptonshire, NN4 9YS.
☎ (h) 01604 702194
☎ (m) 07818 040010 (not after 9pm)
Email: nigelmevans@gmail.com

Northern Ireland: refer to Simon Fowler at Motorsport UK.

Northumbria: See Durham.

Nottinghamshire: See Derbyshire.

Scotland: Jonathan Lord, RSAC Motorsport Limited, PO Box 3333, Glasgow, G20 2AX.
☎ (h) 0141 946 5045 ☎ (m) 07774 788844
Email: jcl@rsacmotorsport.com

Staffordshire: Mark Wilkinson, 38 Alder Way, Holmes Chapel, CW4 8AD
☎ (m) 07879 657580
Email: markwilkinson81@outlook.com

Suffolk: Gary Nicholls, 84 Totnes Walk, Chelmsford, Essex, CM1 6LU.
☎ (h) 01245 351468 ☎ (m) 07895 040441
Email: garyjnicholls@gmail.com

Surrey: See Sussex.

Sussex: Matthew Fowle, Cilverly, Severals Road, Bepton, West Sussex, GU29 0LR.
☎ (h) 01730 814673 ☎ (m) 07748 020894
Email: mattmdfowle@yahoo.co.uk

Thames Valley: Simon Bradley, 7 Beech Road, Witney, Oxon, OX28 6LP.
☎ (h) 01993 702722 ☎ (m) 07970 134990
E-mail: home@simonbradley.com

Wales (North): Ifor Davies. Llecyn, Pencaenewydd, Pwllheli Gwynedd LL53 6RB.
☎ (h) 01766 810213 ☎ (m) 07772 297043
Email: iforsport4@gmail.com

Wales (South): See Dyfed Powys.

Warwickshire: See West Mercia.

West Mercia: Dave Lucas, 29 Avondale Close, Kingswinford, Dudley, West Midlands, DY6 7HJ.
☎ (h) 01384 291441
Email: david.lucas52@hotmail.com

West Midlands: See West Mercia.

Wiltshire: John Rogers, The Moorings, 99 Staverton, Trowbridge, BA14 6PE.
☎ (h) 01225 782358
Email: johnfrogers@blueyonder.co.uk

Yorkshire (North/East): John Richardson, 67 West Park, Selby, North Yorkshire, YO8 4JN.
☎ (h) 01757 702048
☎ (m) 0780 329 6603
Email: richardson_john10@sky.com

Yorkshire (South/West): Paul Slingsby, Wharfedene, Ben Rydding Drive, Ilkley, LS29 8GB.
☎ (h) 01943 605239 ☎ (m) 07747 808579
Email: paulslingsby@ymail.com

NATIONAL PARKS

Brecon Beacons/Pembrokeshire: See Dyfed Powys.
Dartmoor: See Devon & Cornwall.
Exmoor: See Avon & Somerset.
Lake District: See Cumbria.
New Forest: See Hampshire
Northumberland: See Durham.
Peak District: See Staffordshire
Snowdonia: See Wales (North).
South Downs: See Sussex.
Yorkshire Dales/Moors: See Yorkshire (North).

Appendix 5c

Approved Radio Co-ordinators

England

Cleveland, Cumbria, Durham, Northumberland

John Telford, 85 Medway, Great Lumley,
Chester-le-Street, Co. Durham DH3 4HU.
☎ (h) 0191 388 8058.
Email: jttelford@googlemail.com

East Yorkshire and Yorkshire

Chrys Worboys

Cambridgeshire, North Lincolnshire, Lincolnshire, Norfolk, Nottinghamshire

Brian Avery, 5 Bransdale Avenue, Normanton,
Wakefield, West Yorkshire WF6 2SJ.
☎ (w) 01924 220345 ☎ (m) 07968 979948.
Email: brianaveryeagle1@gmail.com

Essex, Suffolk

TBC.

Bedfordshire, Buckinghamshire, Derbyshire, Hertfordshire, Leicestershire, Northamptonshire, Oxfordshire, Staffordshire, Warwickshire, West Midlands

Harold Hicken, 19 Lilybank Close, Matlock,
Derbyshire DE4 3EH.
☎ (h) 01629 584286.
Email: hhicken@aol.com

Kent, Surrey, East & West Sussex

Sue Fielding, 15 Dinorben Close, Fleet,
Hampshire GU52 7SL.
☎ (h) 01252 628020.
Email: susiefielding@outlook.com

Avon, Berkshire, Somerset, Dorset, Wiltshire, Gloucestershire, Hampshire, Herefordshire & Worcester

Mike Summerfield

Devon & Cornwall

TBC.

Cheshire, Greater Manchester, Lancashire, Merseyside, Salop

Bill Wilmer, Brimmicroft Farm, Bolton Road, Hoghton,
Preston, Lancs PR5 0SP.
☎ (h) 01254 208052. ☎ (m) 07973 830705.
Email: w.wilmer@btinternet.com

Isle of Man

TBC.

Scotland

Garry Headridge, 79 Sheriffs Park, Linlithgow,
West, Lothian EH49 7SR.
☎ (m) 07780 602480.
Email: garryheadridge79@btinternet.com

Wales

North Wales (down to A489/A470)

Bill Wilmer, Brimmicroft Farm, Bolton Road, Hoghton,
Preston, Lancs PR5 0SP.
☎ (h) 01254 208052. ☎ (m) 07973 830705.
Email: w.wilmer@btinternet.com

Mid and South Wales

Alan Stoneman.
Email: alanstoneman@sky.com

Northern Ireland

Nigel Hughes.

Appendix 5d

Appointed Technical Commissioners

Scrutineer Car Technical Commissioner

Barnett, C S 29 Offas Green, Norton, Presteigne, Powys, LD8 2NX
☎ (h): 01544 260720 ☎ (w): 0208 9122141
Email: clutchslip@gmail.com

Bassett, R E 23 Hughes Close, Harvington, Evesham, Worcestershire, WR11 8NZ
☎ (h): 01386 870919 ☎ (m): 0777 814 2305
Email: bassettrs@lineone.net

Doe, G The Willows, Whitchurch Road, Newhall, Nantwich, Cheshire, CW5 8DJ
☎ (h): 01270 780 356
Email: geoff@doemotorsport.com

Greig, W G 53 Cupar Road, Kingskettle, Kettlebridge, Cupar, Fife, KY15 7QD
☎ (h): 01337 831952
Email: williegreig@talktalk.net

Harris, M 19 Dawn Close, Ness, Neston, CH64 4DS
☎ (h): 0151 3367462 ☎ (m): 07710 496018
Email: mikeharris.scrut@talktalk.net

Jones, N E 49 The Chase, Eastcote, Pinner, Middlesex, HA5 1SH
☎ (h): 0208 8666942 ☎ (m): 07802 276590
Email: njones6942@aol.com

Mount, C A 6 Almond Close, Countesthorpe, Leicester, LE8 5TG
☎ (h): 0116 277 5943 ☎ (m): 0745 409869
Email: chris.mount956@btinternet.com

Prior, S 63 Glebe Road, Deanshanger, Milton Keynes, MK19 6LS
☎ (h): 01908 562647 ☎ (w): 07763 824161
Email: priorsteve@hotmail.com

Ratley, R W Hunters Lodge, Post Office Road, Woodham Mortimer, Maldon, Essex, CM9 6SX
☎ (h): 01245 223758
Email: rratley@ford.com

Riches, P C The Willows, Low Common, Deopham, Wymondham, Norfolk, NR18 9DZ
☎ (h): 01953 797169 ☎ (w): 01953 797169
Email: RichesST@aol.com

Riches, S 6 Ripley Close, Kingsmead, Milton Keynes, Buckinghamshire, MK45 4HJ
☎ (h): 07803 966706 ☎ (m): 07803 966706
Email: samriches@aol.com

Scrutineer Kart Technical Commissioner

Nicholls, K R 16 Bell Lane, Cotton End, Bedfordshire, MK45 3AD
☎ (w): 07973 176806
Email: kelvinnnichols@btinternet.com

Appendix 5e

Appointed Environment Inspectors

Blissett, A P 22 Riding Hill, South Croydon, Surrey, CR2 9LN
E-mail: alangela@btinternet.com

Clingan, P 16 Mossvale, Lochmaben, Lockerbie, Dumfriesshire, DG11 1QB
☎ (h): 01387 811986
E-mail: peterclingan@yahoo.com

Index to Regulations

Abandonment of a Meeting D29; G2.4.2.
Abusive Behaviour/Language G5.3.6.; C1.1.9.; C2.6.2.
Accidents
– Competitors' behaviour H32.1.7.
– Race & Speed Q12.24.4.
– Records E2.1.3.
– Reporting G5.2.8.; E2.1.3.
Admission D32.3
Advertising H27.1; H28.1.
– Decals H28.1.
– Results of Events H34.1.
– Restrictions D10; H27.1.; Q13.1.3.
Age Limits H7.
– Autocross N3.2.3.
– Autotests M11, M12, M29,
– Cross Country P24.3.1.; P44.1.1.; P41.1.2.
– Marshals G1.1.3.; G13.1.; P1.1.8.
– Press G13.2.
– Rallies R5.3.
– Rallycross N5.5.2.
– Trials T4.1.
Aircraft Restrictions E2.2.6.; R39.3.
Alcohol and Drug Checks (see Anti-Doping)
Alteration of General Regulations H1.7.
Alteration to Supplementary Regulations D11.1.; G2.4.1.
Ambulances (also see Emergency Equipment) Section F
– Autocross & Rallycross N2.15.; N5.4.
– Kart U4.3.
– Race Q10.
– Speed S5
Amendments and Additions to Regulations H1.7.
Amendments to Results H34.1.7.
Animals E2.1.2.
Announcement
– Official D9.1.
Anti-Alcohol and Illicit Drugs H38.2.
Anti-Doping D25.1.14.; D35.1.; G15.1.4.; H38.1.
Appeals C6.1.
Appeal Costs C6.6.
Appeal Fees C6.6.; Appendix 1.13
Armbands D32.5.
Assault (Physical) C1.1.9.; J2.6.2.
Assumed Name H4.
Authorisation of Events D4.1.
Autocross – Section N
– Vehicles N4.
– Course Requirements N2.2.
– Emergency Vehicles N2.15; N2.15.3.; N5.4.
– Junior Autocross N4.21.
– Spill Kit N2.6.3.
– Team Relay N2.14.
– Track Licence/Plan N2.
– Number of Starters N2.13.
– Penalties N3.7.7.
– Flag Signals N2.7. N5.3.
– Technical Regulations N4.
Autotest – Section M
– AutoSolos M1-11., M21-24.
– Clerk of the Course M2.
– Organisation M1,
– Production Car M16.
– Spill Kit M2.6.
– Tests M6-7.; M23.
– Technical Regulations M4-5.; M18-24.
– Under 17s M13.; M17.; M22.
Auxiliary Lights R10.3.1.; R18.5.3.; R18.5.5.; R18.5.6.; P3.4.1.; P56.10.
Average Speed
– Cross Country P2.5.1.-2.5.4.; P3.11.1.; P11.3.2.; P15.5.
– Rallies R2.3.
– Special Stages R28.2.; R26.5.4.
– Classic Trials T2.1.1.
Awards
– Limitation D25.1.2.; H34.1.1.
– Presentation D27.1.1.
Bad Weather Racing E14.
Baulking
– Autocross E63
– Cross Country P1.6.5.; P14.6.; P27.4.3.
– Rallies R2.6.; R24.5.; R24.6.
– Rallycross N5.11.3.
– Speed S9.5.8.; S9.6.
Betting C1.1.11., C1.1.12.
Black Flag G5.3.4.; Q12.24.3.
Bouncing
– Cross Country P41.1.5.
– Trials T4.1.11.
Breach of Regulations H1.2.; C1.1.
Breakdown Vehicles (also see Emergency Equipment) Q8.1.2.
Bridges E6.1.
Bridleway (see Footpaths; Bridleways and Restricted Byways)
British Championship Requirements D4.1.6.; D7.1.10.
Camera Evidence G10.3.
Cameras (in vehicle) J5.20.5.
Cancellation or Postponement G14.; G2.4.2.
Careless Driving C1.1.5.
Car Trials (see Trials)
Challenge Events (see Cross Country)
Championships
– Commercial W1.1.1.
– Co-ordinators W2.2.
– Eligibility Scrutineer W2.2.3.
– Karting U11.1.
– Permits D7.
– Race W1.3.
– Stewards G2.7.; W2.2.1.
Change of Class D25.1.6.
Change of Driver/Vehicle D25.1.12.
– Cross Country P25.2.
– Rallies R5.4.2.; R5.4.3.
Checks and Controls R2.4.; R9.1.; R30.1.; P26.1.1.
Circuit (see Course)
Circuit Breaker K8
Classes
– Classic Reliability Trial T10.
– Cross Country P24.7.1.
– Historic Category 1, 2 & 3 Rally R19.1.; R49.
– Trial T11.
– Speed S10.10.
Classic Reliability Trials T2.; T8.
– Passengers T4.1.8.
Clerk of the Course G5.
– Cross Country P1.1.11.: P2.4.; P14.2.
– Deputies G5.3.
– Duties G5.1.; E1.1.4.; M2.; P2.4.; P14.2.; R2.; R8.; R23.1.-24.11.1.
– Licences G5.1.3.;G18.1.
– Powers G5.3.
– Race Q2.2.
– Race Record Cards G3.1.1.; G5.2.2.; Q4.2.
– Rallies R2.; R8.; R23.1.-24.11.1.
– Speed S1.2.
Clothing/Overalls K9.;K14.3.
Clubman Event D4.3.1.(b).
Clubcross N1-2.13.7. N3.1.-3.6.2.; N3.8. N4.1.-4.8.3., N4.20.
Clubs
– Objection to A4.1.
– Recognition A4.
– Regional Centres A4.2.
– Registration D2.
Clubsport Event (see Clubmans) D4.3.1(a); D4.5.
Club Stewards' Report G2.6.
Code 60 flag Q12.24.4(e).
Code of Conduct A10.
Commentators G14.
Communications E2.3.
– Cross Country P14.3.2(b)
– Rallies R24.3.3.
Competition
– Approval D4.1.
– Numbers J4.1.; P25.1.5.; P41.2.; R6.1.; S9.2.5.
Competitive Safari P11.; P49.
Competitors
– Briefing G5.3.8.; H32.1.3.; Q11.1.1.; Q11.3.1.
– Civil Prosecution D25.1.15.; H36.1.1.
– Indemnity D13.; H23.1.
– Leaving the event H32.1.6.
– List D20.1.; D22.1; D23.1.9.; D24.
– Licence Grades H25.

Chart of Minimum Acceptable Licences
– Responsibilities H1.3.; H31.; H32.1.
– Registration/Licence H3.
– Right to Exclude D25.1.7.
Compliance with Regulations A2.6.
Concours d'Elegance D5.1.2(e).
Contravention of Regulations G5.3.3.; J1.1.; J2.1.
Control
– Location P2.6.; R2.4.
Co-ordinators G2.8.
Costs C2.1.2.; C13.1.
Course
– Aircraft E2.2.6.
– Alteration N2.5.
– Animals E2.1.2.
– Autocross N2.- 2.3.2.
– Bad Weather E14.
– Bridges E6.1.
– Clear (Timekeepers) G6.3.
– Communications E2.3.
– Enclosures E2.4.
– Emergency Rescue Equipment E8.
– Fire Precautions E7.1.
– International E1.3.1.
– Long Distance Racing E10.3.6.
– Marker Boards E2.2.4.
– Marshals' Posts E3.1.
– Medical Arrangements E9.
– Notices D31.1.
– Off-Road Racing N2.17.
– Oil E10.1.
– Pits E5.1.
– Plan and Layout E1.4.
– Records E2.1.3.
– Safety E2.2.1.
– Scrutineering Area E4.1.
– Starting Grid Area E2.2.2.
– Television Installations E2.2.5.
– Timing Arrangements E2.5.
– Wet Q12.9.8.
– Width E2.2.3.
Crash Helmets K10
– Impounding K10.2.1.
Crew
– Cross Country P25.
– Rallies R5.4.
– Trials T4.1.
Cross Country Events P1.
– All Events Using the Highway P2.1.-2.3.3.; P26.1.
– All Events Using the Highway (other than Hill Rallies) P4.3.-4.4.4.; P36.
– Challenge Event Section B, P23.; P55.; P58.2.
– Competitive Safari P11.; P49.
– Competitors P24.
– Controls P35. ; P40.1.
– Crew P25.
– Definitions of Event Sections P3.
– Driving Licences P24.3.
– FE, NRW, FL&S, P1.1.10.; P14.2.1.
– Hillrally see Hill Rallies.
– Junior Trials P6.; P45.
– Numbers P2.7.6.; P25.1.5.; P38.1.3.; P41.2.; P50.5.1.
– Point to Point P22.; P53.
– Promotional Event P9.; P47.
– Public Relations Requirements P4.
– Rescue/Recovery Units F2.; F3.
– Results P29.; P43.
– Retirement P49.9.
– Rights and Duties of Organisers P27.
– Scrutineering P12.2.
– Spill Kits P1.7.; P57.5.3.
– SOS/OK Boards P49.8.
– Team Recovery P21.; P21.
– Technical P56.-63.
– Timed Trial P10.; P48.
– Timing P30.1.
– Trial P5.; P41.1.-43.3.
– Treasure Hunts D5.1.2.(c).; P36.
– Tyro Trial P7.1.; P44.; P62.1.
– Winch Recovery P8.1.; P46.
Damage Declaration P28.1.1.; R15.1.2.; R40.1.3.
Damage
– Cross Country P29.2.
Dangerous Driving G2.4.3.; C1.1.5.
Datalogging D7.1.7.
Date of Operation of Regulations A6.
Dead-Heats S9.5.6.
Declarations D12.3.; D13.1.1.; D13.2.2.; D13.2.3.; H26.1.7.
Definitions
– General Section B
– Organisational Section B
– Technical Section B
Delegation of Sporting Power A2.1.
Demonstrations D5.1.2(g); G5.2.9.; Q12.4.
Direction of Approach
– Cross Country P2.5.5.
– Rallies R9.2.2.
Disabilities
– Diabetics H10.1.7.
– Physical H12.1.
– 'D' Sign H12.1.7.; P25.2.4.; R5.4.5.
Disclaimer D13.1.; G13.1.; H23.1.
Dishonoured Payment C1.1.13.
Disobeying Instruction G2.4.10.; H32.1.4.
Distance Measurement P2.7.3.; R6.2.4.
Disqualification G2.4.7.; G5.3.1.; C2.1.1.(d); C2.5.
– Civil Prosecution D25.1.15.; H36.1.1.
– Unsafe or ineligible car G5.3.1.; C1.1.2(a).; H1.5.
Doctors G15.1.
Dogs and Animals
– Ban E2.1.2.
Drag Racing S16.
– Assistants S16.2.
– Rescue Vehicle S16.7.
– Trucks S16.4.2.
Drag Strips E3.4.
Drink, Drugs D25.1.14.; D35.1.; G15.1.4.; G5.2.16.; H38.
Drivers (see also Competitor)
– Autotest M10.
– Briefing G5.3.8.; H32.1.3.; Q4.2.1.
– Change of D25.1.12.
– Cross Country P25.
– Race Q12.1.1.
– Rallies R5.3.-5.4.
– Speed S9.2.1.-9.2.4.
– Training Event D5.1.2.(g)
– Trials T4.1.
Driving Behaviour Q12.17.; R8.3.; R8.4.; R24.10.
Driving Standards G5.3.5.; C1.1.5.
Driving Standards Observers G11.1.; P2.10.4.; P27.2.; Q4.1.; Q3.1.; R4.1.4.; R8.3.; R8.4.; R24.9.
Duties of Stewards G2.
Economy Rally R7.1.6.; R16.2.
Economy Run R17.4.; D5.1.2(i).
Eligibility
– Appeal C7.2.
– Checks D25.1.8.; C3.; C5.3.; C7.2.
– Protests C5.
– Scrutineers G7.7.
Emergency Rescue Equipment E8.; Section F
Enclosures D31.1.; D32.3.;E2.4.
End of Race Q12-15.; Q12.28.2.; U8.1.
Endorsement of Licences G5.3.9.; C2.1.-2.1.10.
Endurance Karting U1.3.
Endurance Road Rally R10.6.; R20.1.
Entering for Two Clashing Events H31.2.1.
Entrant Responsibilities (see also Competitor) H1.3.;H31.; H32.1.
Entries D14.1.; H29.-30.
– Acceptance D14.1.; H29.1.2.
– Acknowledgment D16.1.; H30.1.1.
– Closing Date D20.1.
– Contract D21.1.
– False D19.
– Fax/Electronic means D12.2.; D12.3.; D13.2.3.
– Form D12.3.
– Indemnity D13.1.
– Ineligible D18.
– Multiple D17.1.
– Opening D12.1.
– Overseas H33.1.
– Refund of Fee H29.1.3(c).; H30.2.
– Refusal H29.1.3(b).
– Reserves D15.1.
– Withdrawal H30.1.1(f).; H30.1.2(c).
Environmental Health Authority G5.2.20.; E2.1.4.
Environmental Policy A9.
Escape Roads D31.1.4.; F83; R24.4.14.
Event Director G4.1.
Event Grades H25.1.1.
Exclusion C2.7.2.9.
Exemption from Regulations A2.4.; D5.1.
External Circuit Breaker K8.

False Start Q12.13.; R25.7.-25.8.; S9.4.4.
Fédération International de l'Automobile (FIA) A1.
Fees Appendix 1
FE, NRW & FL&S Land P1.1.10; P14.2.1.; R1.4.1.; T1.2.; R24.1.1.
– Testing/Practice P24.1.; R5.1.4.; R25.9.
Film Evidence G10.3.;
Final Composition Q12.5.
Fines G5.3.8.; C2.4.; Appendix 1.13.6
– Time limit C2.4.1.
Finisher
– Autocross N3.7.
– Autotest M9.
– Cross Country P28.1.; P43.3.
– Race Q12.28.3.
– Rally R15.1.; R40.1.
– Speed S9.5.5.
– Trials T7.3.
Fire Extinguishers E7.1.; M2.4.; N2.6.2.; P1.3.; P16.5.; P18.3.2.; Q8.1.4.; Q12.25.2.; Q13.10.7.; R36.5.8.; R37.; R41.2.1.; S16.7.1.; U3.1.3.; K3.
Fire Precautions Certificate E7.1.; Q8.1.4.
Fixture List D3.
Flag Marshals G9.2.
Flag Signals
– Karting U6.
– Non-compliance G5.3.2.
– Race Q12.24.
– Speed Events S4.
– Size Q12.24.8.
Flying Start Q12.9.11.
Footpaths, Bridleways and Restricted Byways E1.5.16.; P1.4.; R2.1.10.; T2.2.
Force Majeure
– Cross Country P27.4.3.
– Rallies R2.6.
– Trials T6.2.4.
Foreign Events Appendix 3
– Authorisation/Visa H33.1.1.
– EU Licences H22.1.5.; H25.2.1.
Formula Libre Races Q1.3.
Frontal Head Restraint (FHR) K10.4.; P25.1.; Q12.1.1(e).; S9.2.1.; R25.3.3.
Fuel Definition J5.13.; Section B, Appendix 1
Fuel Samples/Checking/Testing D34.1.; C4.
Fuel Storage Q12.25.1.
General Regulations A2.2.
Give Way Signs P2.9.7.; P4.3.1.; P27.1.1.; P36.2.; R8.1.1.; R9.1.1.; R24.7.; R33.1.7.
Goggles K11.; P25.1.; P57.3.2.
Grade of Event D4.3.
Grand Prix Title D4.1.6.
Grid Size E2.2.2.; U2.10.
Gymkhana D5.1.2.(b); Section B
Handicaps Q12.7.3.; Q12.10.
Handicappers G6.7.
Hazard Board Q12.24.; Q12.24.3(o).; Q12.24.6.
Headlights J5.14.4.
Head Restraints K2.3.
Health and Safety G5.2.20.; E2.1.4.; P18.3.; R39.1.
Health and Safety Policy A8.
Heats Q17.2.8.
Helmets K10.
Hill Climbs (see Sprints)
Hill Rally P14.1.-19.10.; P50.51.
Hill Rallies
– 30 Second Starts P15.6.
– Admission Charges P16.2.
– Age Limits P24.3.1.; P25.2.2.; P50.4.5.
– Arrowing P17.
– Arrowing/Signposting P17.; P51.1.
– Authorisation P2.2.1.
– Bogey Time P31.2.; P31.13.
– Check Sheets P26.1.11.
– Clerk of Course P1.1.11.; P2.4.; P14.
– Competitor Searches P14.7.3.
– Control Locations P2.6.; P35.; P40.1.
– Control Signs P11.12.6.
– Course Cars P2.10.; P2.1.0.4.; P16.6.
– Crash Helmets P50.4.1.-50.4.2.
– Damage Declaration P28.1.1.
– Danger Spots P11.11.1.
– Description of Section P3.
– Dispute on Mileage P2.7.3.
– Emergency Vehicles P18.4.
– Finish Line P15.1.1.; P15.1.3.
– Finisher P28.1.
– Footpaths Bridleways and Restricted Byways P1.4.
– Forest Enterprise Land P1.1.10.; P14.2.1.; P24.1.
– Gates P2.5.6.-2.5.7.
– Give Way Junctions P2.9.7.; P4.3.1.
– Helicopters/Aircraft P50.2.
– Instructions P24.1.1.-24.1.2.
– Intercom P36.1.; P50.3.
– Lateness P30.1.; P33.1.
– Licences H20.; P24.2.-24.3.1.
– Marking P30.1.
– Medical Cover P19.
– Medical Criteria H9.1.; H11.1.; H12.1.
– Medical Requirements H9.1.; H11.1.; H12.1.; P50.4.4.
– Multi-use Hill Rallies P18.1.-18.2.6.
– Neutral Section P2.5.3(d).; P3.4.-3.5.4.; P33.1.3.
– Noise Checks J5.17.; P2.10.; P27.1.; P27.2.2.
– Numbers J4.1.; P2.7.6.; P25.1.5.; P36.4.; P41.2.; P50.5.1.
– Officials' Location P15.2.3.
– Organisation P1.
– Pace Notes P36.3.; P51.4.
– Passage Control P39.1.
– Physical DisabilitiesP25.2.4.
– PR Requirements P4.1. (F44); P18.2.5.
– Public Relations Work P4.1.
– Radios P36.1.; P50.3.
– Red Flag P14.5. ; P51.2.1.
– Rescue Vehicles P18.4.
– Rest Periods P2.5.11.-2.5.12.
– Results P29.
– Retirement P49.9.
– Road Book P2.9.
– Route Checks P38.1.
– Route Information P2.9.; P26.1.
– Route Liaison P2.4.4.
– SOS/OK Boards P49.8.
– Safety P16.3.1.
– Safety Code P16.3.; P16.5.
– Safety Frequencies P2.4.8.
– Safety Officer P14.3.2.
– Scheduled Timing P2.5.; P32.1.-34.1.5.
– Scrutineering P24.1.3.
– Seating P25.2.2.
– Seeding P2.6.6. ; P14.1.1.
– Service P50.1.5.-50.1.6. ; P50.6.-50.9.5.
– Service Areas P8.3.
– Special Stages P.11.-3.12.; P15.1.-16.5.; P17.
– Spectator Control Cars P18.2.
– Speed Schedule P2.5.3.
– Split Routes P11.12.
– Stage Commander P14.2.4.
– Stage Safety Unit P18.4.; F3.1.-3.4.
– Stage Tulip Diagram P11.11.1.
– Stopping a Stage P14.5.; P14.6.
– Target Timing P31.
– Technical Regulations P56.1.-57.5.2.
– Ties P29.1.1.
– Time Cards P25.3.
– Time Control P40.1
– Timekeeper P2.13.
– Timing P2.13.; P15.4.; P30.1.
– Transport Section P3.7.-3.8.3.
– Upgrading (Event) P1.1.3.
– Warning Notices D31.1.-32.5.
– Zero Cars P16.6.
Identification of Competitors H32.1.5.
Impounding Crash Helmets K10.2.1.
Impounding Vehicle G2.4.11.
Incidents
– Race and Speed Q12.2.
– Record Book E2.1.3.
Indemnities D13.1.; G13.1.
– Admission Tickets D32.4.
– Badges D32.4.
– Car Park Tickets D32.4.
– Competitors D13.1.; H23.1.
– Guardian D13.1.1.; H7.; H21.1.7.; H21.1.8.
– Officials/Marshals G13.1.
– Photographers G13.2.
– Press G13.2.
– Public D31.1.
– Submission to Rules A2.6.1.-2.6.4.
– Under Age H7.
Index of Performance
– Trials T7.3.4.
Ineligible Entry D18.
Inquiry C9.

Insurance D30.1.; H37.
– Charges Appendix 1.5
– Competitors' details D12.3.; R5.1.2.
Instructions
– Official D8.1.4.
– Oral P24.1.1.-24.1.12. ; R6.3.
– To Competitors D8.1.4.; P24.1.1.-24.1.12.; R6.3.1.
Interclub Event D4.3.1(c).
International Control of Automobile Competition A1.1.
International Events A2.3.14.; D4.3.1.(e).
International Sporting Code A1.1.1.
Interpretation A2.2.2.-2.2.4. ; H1.8.
Joker Lap N5.1.4.
Judges G10.1.
– Rallycross N5.11.
– Autotest M2.2.
– Cross Country P1.6. ; P27.1.
– Races Q3.
– Rallies R8.1. ; R24.7.
– Speed Events S9.6.
– Trials T7.1.
Judicial Procedure Part 3, Appendix 4
Judicial Fees Appendix 1 13
Kart Regulations
– Administration U1.1.
– Age Limits K15.
– Barriers U2.8
– Change of Engine/Chassis U7.1.
– Championships U11.1.
– Chassis Registration U1.1.5.
– Circuits U2.
– Classes U1.2. (K5); K15.
– Clerk of the Course U4.2.
– Clothing U13.
– Crash Helmets U13.1.
– Endurance Racing U1.3.
– Engine Registration U1.1.5.
– Equipment U3.1.
– Finisher U12.5.1.
– Fire Extinguishers U3.1.3.
– First Aid U4.3.-4.4.3.
– Flags Q12.24.; U6.1.-6.2.6.
– Lap Scoring and Timing U5.1.-U5.3.3.
– Licences H8.3.; H19.; U14.1.
– Long Circuit Novices U14.1.4.
– Marshals U4.6.-4.8.4.
– Medical U4.3.-4.4.3.
– Non-starter U12.5.1.
– Novice U14.1.2.
– Number Plates U17.25.-17.28.1.
– Officials U4.
– Outside Assistance U12.5.7.
– Permit U1.1.1.
– Practising U7.2.
– Race Procedure U7.-9.1.3.
– Rear Lights U17.30.
– Refuelling U12.5.6.
– Scales U3.1.8.
– Scrutineer U4.5.
– Secretary of Meeting G3.; U4.9.
– Signals U6.1.-6.2.6.
– Starting Order U7.4.
– Start Lights U6.1.
– Starters U2.10.
– Starter's Orders U7.5.3.
– Stewards G2.; U4.10.
– Stopping Race U7.9.
– Technical
– Bodywork U17.
– Bumpers U17.2., U17.7, U17.9., U17.12-17.17.3.
– Chassis U16.2.-16.3.5.
– Engines and Transmission U18.1.-18.6.3.
– Fuel U16.7.-16.19.3.
– Silencing U16.16.
– Tyres U16.9.
– Tyre Checking C4.3; U20.
– Track Condition U2.5.-2.10.6.
– Visors U13.2.
– Wet Races U12.3.
Length of Meeting G3.2.9.
Licences H3.1.
– Advertising H27.; H28.
– Assumed Name H4.
– Clerk of the Course G18.1.
– Downgrading H13.1.2.
– EU Countries H25.2.2.
– Endorsement C2.1.4.-2.1.10.
– Entrant H26.1.
– Examination G3.1.1.; G5.2.6.
– Fees Appendix 1.1
– Foreign Nationals H2.1.; H8.2.6.; H8.3.5.; H8.4.4.; H5.; H25.2.2.
– Junior Race H7.; G3.1.4.
– Medical Requirements H9.1.-12..1.7.
– Motorsport Ireland H25.1.5.
– NatSKA H24.
– Non-production G3.1.3.; G5.2.6.; H21.1.2.
– Officials G1.2.4.; G17.1.
– Restrictions H22.1.
– Track E1.
– Truck Racing H18.1.
– Upgrading Requirements H13.2.
– Upgrading Signatures G5.2.19.
– Validity H3.1.4.
– Waivers H24.1.1.
List of Competitors D20.1.;D22.1.; D23.1.9.; D24.
Local Authority Permission D6.1.
Log Books J2.1.; R25.2. ; S9.1.7.
Long Distance Races E10.3.
Maps R6.2.4.; R9.1.5.; R25.9.3.; P2.7.3.; P36.3.; P51.4.1.
Marker Posts, Pylons M8.2.; T1.3.13.-1.3.16.; P5.3.
Marshals G12.1.; G13
Marshals' Cars E2.1.1.; P14.5.4(f).; R24.4.12.
Marshals' Posts E3.1.
Medical Arrangements G15.1.; E2.1.3.
– Ambulance and Staff N2.15. N5.4.; Q10.
– Autocross N2.15.
– Karting U4.3.-4.4.3.
– Cross Country P1.1.7.; P19.
– Race Circuits Q10.; F2.; F6.1.-6.3.6.
– Rallycross N5.4.
– Rallies R34.1.-36.4.3.; F3.1.-3.4.; F3.5.-3.8.
– Speed Events S5.; F2.
Medical Certificates G5.2.6.; H9.1.-12.1.7.
– Failure to produce G5.2.6.
Medical Facilities E9.3.; F6.1.6.3.6.
Medical Committee E9.1.
Medical Officer Q8.1.1.; F7.1.-7.2.5.
Medical Requirements
– Licences H9.1.-12.1.7.
Meetings (see also Competition and Events)
– Cancellation D3.2.1.
– Exempt from Regulations D5.1.
– Grade D4.3.
– Length G3.2.9.
– Objections D3.2.
– Observation by Motorsport UK D4.4.; G1.2.3.
– Observer Reports D4.4.3.
– Over-running Time G3.2.8.
– Up-grading Requirements D4.4.(A19); M1.2.; E34; P1.1.3.; Q1.1.5.; R1.5.; S1.1.2.; T1.1.
Methanol J5.13.
Mileage
– Calculation P2.7.3.; R6.2.4.
Minicross N2.17.
Minimum Ages H7.
Mirrors use of Q12.21.2.
Misbehaviour/Unfair Practice C1.1.8.
Mobile Phones Q11.3.; R7.2.3.
Motorsport UK A2.1.1.
Motor Sports Council A2.1.2.
Motorsport UK Logo A2.1.4.
Motorsport UK Pass G1.4.3.
Multi-use Stage Rallies R41
Multi-use Hill Rallies P18.1.-18.2.6.
National Championship D7.1.9.
National Court A3.; Section C
National Competition Rules A2.
National Control of Motor Sport A2.
National Event D4.3.1(d).
NatSKA Licence H24.
Navigational Rally R7.1.3.; R16.1.
Navigational Scatter D4.5(b).; R7.1.8.; R16.5.
Next of Kin D12.3.7.
Night Races E12.1.
No-Contest Q12.15.1.
Noise (see Sound)
Noise Meter Standards G7.10.
Notices A5.
– Warning D31.1.
Novice G3.1.1.;G5.2.19.; H8.3.; H13.1.; H34.1.4.; Q11.3.1.; Q11.4.4.; U14.1.2.; U17.27.4.
Novice Yellow Square Q11.4.4.; U17.27.4.
Numbers
– Cross Country P2.7.6.; P25.1.5.; P38.1.3.; P41.2.; P50.5.1.
– Trials T5.
– Races Q11.4.
– Rallies R6.1.; R2.8.
– Speed S9.2.5.
– Description J4.1.
– Removal/Display on Highway P25.1.4. ; Q11.4.2.; R6.1; S9.2.6.
Observed Sections
– Cross Country P42.
– Trials T6.

Observer Reports G9.1.7.
Observers G9.1.
– Motorsport UK Appointed G1.2.3.
Official Announcement D9.1.
Official d'Honneur G16.1.
Official Documents D8.1.
Official Instructions D8.1.4.
Official Notice Board D22.1.; G3.2.2.; G11.2.2.; G11.3.2.; P2.8.1.; R2.8.1.; R6.3.1.; U3.1.7.
Officials G1.
– Age G1.1.3.;G17.4.
– Assistants G1.1.2.
– Competence and Fitness G5.2.16.
– Competing G1.3.
– Dangerous Position G13.1.4.
– Duties and Responsibilities Section G
– Experience R1.1.6.
– Identification G13.1.1.
– Indemnities G13.1.
– Ineligible D18.
– Cross Country P11.8.1. ; P15.2.
– Rallies R26.3.
Off-Road Racing N2.17.
Oil
– Notes on dealing with E10.1.
Opening of Entries D12.1.
Orange Disc J5.13.6.
Organisation D1.
Organisers' Rights D25.1.; H29.1.3.(e).; H29.1.3.(f).
Orienteering P20.; P54.
Overalls K9; K14.3.
Overtaking
– Race Q12.2.1.; Q12.24.3.; Q12.24.5.; Q12.28.2. Appendix 5
Pace/Parade Car G5.2.17.; Q4.9.
Pace Notes
– Penalties R9.1.6.; R25.9.; P36.3.; P51.4.
Paddock Q12.25.; S9.3.
– Drag Racing S16.6.
– Speed Limit Q12.17.; S9.3.6.
Paramedics N2.15. N5.4.; P19.; G28; R34.1.; S5.2.1.-5.2.2.; F7.3.-7.5.
Parc Fermé D10.1.28.; D25.18.; P31.11.; P50.7.3; P50.8.; R31.2.11.; U8.1.; U9.
Passengers (see also Competitors)
– Autotests M3.
– Cross Country P24.1.3. ; P25.2.
– Rallies R5.2.1. ; R5.4.
– Trials T4.
Passes D32.3.; H32.1.5.
Payment of Fees/Fines C2.4.2.
Penalties
– Breach of Regulations C1.
– Autotests M8.
– Cross Country P14.7.1.; P30.1.; P43.1.-43.2.
– Overtaking Race Q12.24.5.
– Points C2.1.4.-2.1.10.
– Race G5.3.
– Rallies R13.; RF24.6.; R32.2.
– Remission C2.12.
– Speed; Markers S9.5.4.
– Time B29; C2.1.1.(c).;C2.3.
– Trials T7.5.
Per Capita Fees Appendix 1.4; Appendix 1.5
Period Vehicles Section B
Permits
– Application D4.1.1.
– Approval D4.1.
– Clubsport D4.5.; D4.5.
– Conditions D4.1.4.
– Event Title D4.1.6.
– Exemption D5.1.
– Fees D4.2.; Appendix 1
– Fixture List D3.
– Grade D4.3.
– Radio and Television Approval D4.1.7.
– Refusal D4.1.3.
– Restrictions D4.1.4.
– Time Limits D4.1.1.
– Upgrading Requirements D4.1.5.; D4.4.
Physical Disabilities H12.1.
Pit
– Age Limit D31.1.3.
– Attendants Q12.25.1.
– Observers G8.1.
Pits E5.1.
– Regulations Q12.25.
Police Notification P1.4.2.; R3.1.
Postponement of a Meeting D29.1.; G2.4.2.
Powers of the Motor Sports Association A3.
Practice
– Altered Course N2.5.
– Autocross N2.12.
– Disallowed Time Q12.27.; C3.3.
– Minimum Requirements E14.4.1.; Q12.4.
– Mixed Single Seaters and Race E2.2.1.; Q12.4.4.
– Out of Session Q12.4.2.
– Rallycross N2.5.
– Saloons Q1.3.
– Speed S2.1.-3.3.; S9.4.
Practising/Training
– Events D5.1.2.(g).; R43.1.
– Cross Country P15.1.2.
– Rallies R26.7. R43.1.
Pressure Control Valves J5.9.4.
Private Property and Roads P2.4.6.; P26.1.4.; P29.; R2.1.9.; R9.2.3.
Prize Distribution D27.1.
Prize Money D27.1.
Procedure at Hearings C5.4.1.; C6.4.
Production Car Autotests (see Autotests)
Programme Contents D18.;D22.1.; D23.1.9.; D32.4.
Programme Modifications G5.2.13.
Promotional Event Cross Country P9.; P47.
Prosecution D25.1.15.
Protests G5.2.18.; H34.1.6.; C5.
Protest Costs C5.3.3.
Protest Fees C5.1.2.; Appendix 1.13
Protest Time Limit C5.2.
Protests
– Eligibility C5.1.-5.4.1.
Provisional Results D26.1.; H32.1.5.
Pseudonym H4.
Public Highway Events page 283
Public Relations
– Cross Country P4.1.
– Rallies R3.1.
Public Roads
– Cross Country P2.2.
– Rally Regulations R1.1.
Publication of Results D26.1.
Publicity for Events D4.1.8.; G3.2.6.
Qualification
– Practice Requirements Q12.4.
Race Director G4.1.
Race Meetings Q1.
– Championships Q6.1.
– Changing Tyres Q12.9.12(iv).
– Clerk of the Course Q2.
– Drivers Q12.1.1.
– Drivers' Briefing G5.3.8.
– False/Jump Start Q12.13.-12.14.
– Finisher Q12.28.3.
– Five Sec Board Q12.12.1.
– Flag Signals Q12.4.
– Flashing Lights G5.2.22.; G9.1.9.; E1.5.17.; E3.1.3.
– Formation Lap Q12.12.
– Green Flag Lap Q12.12.
– Ground Clearance J5.20.11.
– Heats Q12.5.
– Handicap Q12.7.
– Hazard Warning Q12.24.
– Incidents Q12.2.; Q12.24.4.
– Junior Licence H7.
– Kart Licence Credits H14.2.11.
– Licences H14.
– Marshals' Posts E3.1.
– Medical Facilities E9.3.; F6.1.-6.3.6.; Q12.2.
– Outside Assistance Q12.25.
– Night E12.1.
– Numbers J4.1.; G40-43
– Organisation Q1.
– Overtaking Q12.21.
– Pit/Paddock J13.
– Pace Car Q.Appendix 5.
– Practice Q12.4.; Q12.9.11.
– Previous Experience Q12.4.
– Radio Transmitters Q11.3.
– Results Q12.28.
– Safety Car Q.Appendix 3&5.
– Signing-on Q11.1.
– Spill Kit E.7.5.
– Start Q12.9.
– Start Procedure Q12.9.12.; Q12.10.
– Starting Positions Q12.9.2.
– Stop/Go Penalty Q12.24.
– Stopping Race G2.4.2.; G5.2.21.; Q12.15.
– Technical Regulations Q13.
– Track Regulations Q12.17.
– Under Appeal C7.3.
– Warm-up/Reconnaissance Q12.9.8.
– Warning Notices D31.1.3.
Radio Transmitters
– Cross Country P36.1.; P50.3.1.
– Racing Q11.3.

– Rallies R7.2.3.; R25.1.
– Safety Frequency R2.10.; Section F.
Rallycross
– Organisers N5.
– Competitors N5.5.
– Technical N6.
– Joker Lap N5.1.4.
– Junior N7.
Rallies
– Ages R5.3.
– Arrowing/Signposting R25.6.; R29.1.
– Authorisation R1.1.
– Check Sheets R26.1.5-26.1.7.
– Clerk of Course R2.1.; R8.1.; R23.1.-24.1.5.
– Competitor Searches R24.11.
– Control Locations R2.4.; R11.1.; R30.1.
– Course Cars R4.1.; R2.9.
– Damage Declaration R15.1.2.; R40.1.3.
– Danger Spots R29.2.
– Description of Section R10.; R27.
– Dispute on Mileage R6.2.4.
– Driving Standards Observers G11.1.-11.2.; R4.1.6.; R24.8.; R8.3.; R8.5.
– Economy R7.1.6.; R16.2.
– Endurance Road Rallies R10.6.; R20.1.
– Exemption of Permit Events R17.
– Finisher R15.1.; R40.1.
– Footpaths; Bridleways & Restricted Byways R2.1.10.
– Forest Enterprise Land R1.4.1.; R24.1.1.
– Gates R2.3.5.
– Give Way Junctions R8.1.1.; R9.1.1.; R24.7.; R33.1.7.
– Historic Road Rallies R5.1.3.; R16.4.; R19.
– Instructions R6.3.
– Intercom R7.2.3.; R25.1.
– Lateness R12.1.-12.4.; R31.2.4.-31.2.6.
– Licences H8.4.; H15.; R5.2.
– Log Books J2.1.; R25.2.
– Marking R13.; R32.2.
– Medical Cover R34.1.-36.4.3.
– Medical Criteria H9.1.-12.1.7.
– Multi-use Stage Rallies R41.
– Navigational D4.5.(a); R7.1.3.; R16.1.
– Navigational Scatter R7.1.8.; R16.5.
– Neutral Section R10.3.
– Noise Checks J5.17.; R4.1.; R24.9.
– Numbers R2.8.; R6.1.
– Officials' Experience R1.1.6.
– Officials' Position R26.3.
– Organisation R1.1.
– Pace Notes R9.1.5.; R25.9.
– Passage Control R11.4.
– Physical Disabilities R5.4.5.
– Practising/Training R43.1.; Section B
– Public Relations Work R3.1.
– Quiet Zone R9.3.
– Radios R7.2.3.; R25.1.
– Record Cards R2.6.3.
– Red Flag R24.4.5.; R25.6.4.
– Red Warning Triangle R48.10.9.
– Regularity Section R10.4.; R11.1.1.
– Rescue Vehicles R36.4.
– Rest Periods R2.2.
– Results R15.1.; R40.
– Road Book R14.1.; R33.1.
– Road Safety Event R7.2.; R17.1.
– Route Checks R11.3.
– Route Information R14.1.; R33.1.
– Route Liaison R2.1.6.
– SOS/OK Boards R25.4.
– Safety Cars R2.9.; R4.1.; R36.5.
– Safety Frequencies R2.10.
– Safety Officer R24.3.1.
– Scheduled Timing R12.2.1.-12.2.2.
– Scrutineering R5.1.1.-5.1.2.
– Seating R5.4.4.
– Seeding R2.5.2.; R24.1.4.
– Service R7.2.4.; R38.1.1.-39.3.3.
– Service Areas R39.
– Special Stages R28.
– Special Tests R10.
– Speed Schedule R2.3.
– Spill Kit R10.1.4.; R18.6.5.; R19.8.1.; R28.5; R46.1.5.
– Stage Safety Unit R36.4.; F3.1.-3.4.
– Stage Tulip Diagram R29.1.6.
– Standard Section R10.2.
– Stopping a Stage R24.4.5.; R24.5.
– Targa Road Rally R7.1.9.; R16.6.
– Target Timing R31.
– Technical Regulations R18-20.; R46.1.-49.10.3.
– 'Three-quarters time' Rule R12.7.
– Ties R15.2.2.; R40.1.2.
– Time Cards R12.4.3.; R30.1.2.
– Time Control R11.5.
– Timed Trial R44.1.
– Timekeeper G6.5.10.; R12.1.1.; R31.1.1.
– Timing R12.1.; R26.5.; R31.1.
– Transport Section R10.5.
– Treasure Hunts R17.2.
– Trophy Rally Section B
– Twelve Car D4.5(a); R16.3.
– Upgrading R1.5.
– Veteran D4.5(j) ; R17.3.
– Vintage R16.2.
– Warning Notices D31.1.-32.5.; R26.8.1.
– Zero Cars R36.5.
Rallycross
– Circuit N5.1.
– Clerk of Course Licence N5.1.3.; G21
– Emergency Vehicles N5.4.
– Flag Signals N5.3.
– Licences H17.; N5.5.
– Medical Criteria N5.8.1.; H9.1.-12.1.7.
– Practice N5.2.
– Technical Regulations N6.
– Upgrading Licence H17.
Rally Recovery Unit F3.5.-3.8.
Rally Rescue F2.
'Rallysprint' D5.1.5; Section B
Rally Timekeeper G6.5.10.
Reckless Driving C1.1.5.
Recognised Groups A4.1.1.
Recognition of Club A4.; D2.
Record Regulations Section V
Record Cards
– Upgrading G5.2.19.
Refuelling E7.4.; Q12.25.1.; U12.5.6.
Refund of Entry Fees H29.1.3(c).; H30.1.2.
Refusal of Entry H29.1.3(b).; H30.1.1(b).
Registration Fees Appendix 1
Registration of Club A4.; D1.
Registration of Competitors H3.1.
Registration of Officials G1.2.4.
Regularity Section R10.4.; R11.1.1.
Regulations Alteration D11.1.
Regulation Stability A2.5.2.
Reprimand C2.4.
Reporting of Penalties/Exclusions to Stewards G5.3.10.
Re-runs
– Cross Country P1.6.7.; P14.5.4.(d).; P49.5.3.; P51.2.3.
– Rally R24.4.10.; R25.6.7.
– Speed S9.5.7.-9.5.8.
– Autotest M7.11.
Re-Scrutinty J3.1.3.
Rescue Crews F2.5.
Rescue Training F5.2.
Rescue Vehicles (see also Emergency Rescue Equipment) Section F
– Cross Country F2.
– Race F2,
– Rallies F2
– Speed Events S5.2.1.; F2.
Reserve Entry D14.1.; H30.1.1(c).
Restarting a Race Q12.15.1.
Rest Periods
– Cross Country P2.5.11.-2.5.12.; P25.2.3
– Rallies R2.2.
Restricted Byway (see Footpaths; Bridleways and Restricted Byways)
Results
– Publication D26.1.
– General H34.
– Amended H34.1.7.
– Autotest M9.
– Cross Country P29.1.; P43.
– Race Q17.2.8.
– Rally R15.1.; R40.1.
– Speed S9.5.
– Stopped Race Q12.15.
– Trials T7.
Reverse Direction Driving Q12.23.
Reversing on Stages P51.1.1.-51.1.2.; R25.6.2.
Rewards
– Limitation D27.2.; N2.16.

Right to Exclude D25.1.7.
Rights of Way (see Footpaths; Bridleways and Restricted Byways)
Road Book/Route Card P2.9.; R14.1.; R33.1.
Road Safety Events D5.1.2.(f).; R17.1.
Road Traffic Act 1991 D6.1.3.
Rolling Start Q12.9.11(b).
Roll-over Structures K1.
Route
– Cross Country P2.9. ; P26.1.; P33.4.; P42.
– Rally R9. ; R14.1.; R26.1.; R33.1.
– Trials T6.
Route Notes P27.1.; P51.4.; R9.1.5.; R25.9.
Runs Permitted
– Speed S9.5.6.
Safeguarding Policy A7; D13.1.5.
Safety
– Autocross E21
– Cross Country P25.1.
– Non Competing Cars E2.1.; P14.5.4(f).; R24.4.12.-24.4.13.
– Technical Requirements J3.1.; J5.19.1.; Section K
– Trials T1.3.
Safety Car
– Racing Q.Appendix 3&5.
– Rallying R2.9.; R4.1.; R36.5.
Safety Officer
– Competitive Safaris P12.3.
– Hill Rallies P14.3.
– Special Stages R24.3.1.
Scrutineering D33.; J3.1.
– After Accident J3.1.2.
– Area E4.1.
– Autotest M10.2.
– Cross Country P24.1.3.
– Eligibility C3.
– Fuel Sample D34.2.
– Noise D33.3.; J5.17.
– Post Event J3.1.4.
– Pre Event D33.2.; J3.1.
– Race Q11.1.
– Rallies R5.1.
– Re-examination J3.1.3.
– Speed S9.1.
– Trials T3.1.
– Weighing Scales E4.1.4.
Scrutineers D33.1.; G7.1.; J3.1.; C3
– Chief Scrutineer G7.1.;G10.2.1.
– Decision overruled G7.2.5.
– Duties and Powers G7.1.5.
– Eligibility Protests C7.2.
– Expenses G17.10.
– Expenses re: Protests D25.1.11.; C5.3.3.
– Facilities and Requirements E4.1.
– Groups G7.5.
– Incident Procedure Q12.2.
– International Events G7.4.2.
– Labels G7.2.1.
– Nomination by Motorsport UK G7.1.
– Number Required G7.1.6.
– Time Allowed G7.2.
– Trainee G7.5.
– Seminars G7.3.5.
– Written Report G7.2.6.
Sealing J3.1.6.; C5.3.
Seat Belts K2.1.
– Autocross N4.19. N4.21.12.
– Cross Country P57.2.1. ; P58.1.3.; P59.1.2.; P63.10.1.
– Race Q13.10.2.
– Rallycross N6.12.2.
– Rallies; Road R18.1.10.
– Rallies; Endurance Road R20.1.11.
– Rallies; Stage (inc. Historic) R48.10.4.
– Speed S10.1.8.-10.1.10.
Seats K2.2.
Secretary of the Meeting D26.4.; G3.
Series (see Championships)
Service Crews P50.1.4.-50.1.6.; P50.6.; P50.9.3.; R38.1.1.-38.3.1.
Signals
– Flag Q12.24.
– End of Race Q12.24.9.
– Speed Events S4.
– Stopping Race Q12.15.
Signing-On G3.1.1.; G13.1.; H32.1.1.
Silencing J5.17.
Single Venue Stage Rallies (See Multi-use Stage Rallies)
Smoking D35.1.; P25.1.7.; Q12.1.2.; R24.7.7.; T7.1.7.
SOS/OK Board P49.8. ; R25.4.
Sound Testing G10.2.2.; J5.17.; R4.1.; U16.16.
Special Stage Rallies R21.
– Admission Charges R26.8.3.-26.8.4.
– Age Limits R5.3.
– Arrowing R25.6.; R29.1.
– Bogey Time R31.2.2.
– Clothing R25.3.
– Control Signs R11.; R29.4.1.
– Crash Helmets R25.3.
– Emergency Vehicles R36.4.
– Finish Line R26.2.1.-26.2.3.
– Helicopters/Aircraft E2.2.6.; R29.4.1.; R39.3.
– Historic Special Stage Rallies R25.2.1.; R42.1.; R49.
– Medical Cover R34.1.-37.
– Medical Requirements H9.1.-12.1.7.; R25.5.
– PR Requirements R3.1.; R41.3.2.
– Safety R26.9.
– Safety Code R26.8.3.-26.8.5.
– Safety Officer R24.3.1.
– Service Areas R38.
– SOS/OK Board R25.4.
– Split Routes R29.3.
– Stage Commander R24.2.1.
– Stage Safety Unit R36.4.; F3.1.-3.4.
– Stopping a Stage R24.4.5.
– 30 Second Starts R26.6.1.-26.6.2.
– Timing R26.5.; R31.
Special Tests See Rallies.
Spectator Control Cars R41.3.3.
Spectator Marshals
– Race G12.1.; Q4.; R24.2.1.
– Stage Safety Unit R36.4.; F3.1.-3.4.
– Stopping a Stage R24.4.5.
– 30 Second Starts R26.6.1.-26.6.2.
– Timing R26.5.; R31.
Speed Limits
– Classic Trials T2.1.1.
– Cross Country P2.5.3.; P11.3.2.
– Special Stages R8.2.1.-28.2.2.
– Speed S9.3.6.
– Race Q12.17.
– Road/Navigation R2.3.2.
Spill Kits (Definition see Environmental Spill Kit B)
– Autotest M2.6.
– Autosolo M2.6.
– Autocross & Clubcross N2.6.3.
– Cross Country P1.7.; P57.5.3.
– Karting U3.1.10.
– Racing E7.5.
– Rallies R10.1.4.; R18.6.5.; R.19.8.1.; R28.5.; R46.1.5.
– Rallycross E7.5.
– Trials T1.3.24.; T9.8.3.
– Sprints, Hillclimbs E7.5.
Sporting Trials (see Trials)
Sprints and Hill Climbs Section S
– Categories S10.10.
– Clerks of the Course S1.2.; G20.1.
– Drivers S9.2.
– Driver Qualification S7.1.
– Flag Signals S4.; S9.3.7.
– Finisher S9.5.5.
– Judges S9.6.
– Licences H16.; S7.1.1.; S8.
– Log Books J2.1.; S9.1.7.
– Marshals' Posts E3.3.
– Medical/Rescue S5.
– Organisation S1.1.
– Practice S2.; S9.4.
– Paddock S9.3.
– Penalty Markers S9.5.4.
– Refuelling S9.3.4.
– Rescue Vehicle S5.2.1.
– Results S9.5.
– Re-runs S9.5.8.
– Scrutineers S9.1.1.
– Spill Kits E.7.5.
– Starting S3.1.
– Spoilers/Splitters S12.5.10.
– Technical Regulations S10.-15.
– Timekeepers S6.
– Timing Struts S10.9.
– Wheel spinning S9.3.1.
Stability of Regulations A2.5.2.
Standard Car Trials (see Trials)
Standing Start Q12.9.11(a).
Start, Procedure Q12.9.11.
– Autocross N2.12.
Start, Kart U7.4.
Start, Race Q12.9.11.
– Delayed Q12.10.1.
– Engines Running or Stopped Q12.11.1.
– False Q12.13.
– Grid E2.2.2.
– Heats Q12.5.
– Maximum Number E2.2.1.
– Protest Q12.9.12(ii).
– Signal Q12.12.
– Stalled Q12.11.2.
– Starter's Orders Q12.12.2.
Start, Rallies
– Order R2.5.1.
– Special Stages R25.7.

Start, Hill Rallies
– Order P2.6.6.
– Special Stages P51.3.
Start, Speed S9.4
– False S9.4.4.
– Number Permitted S9.4.2.
– Order S9.4.3.
– Position S3.2.1.
– Starter's Orders S9.4.6.
– Unsatisfactory S9.4.5.
Start, Trials T6.3.
Start and Finish Line E2.2.2.
Starters
– Order Q12.12.2.
– Permitted E2.2.1.; G15
– Starting Grid E2.2.2.
– Starting Money D27.2.1.
Steering Wheel J5.7.1.; U16.11.
Stewards G2.
– Chairman G2.1.5.
– Championship G2.7.; W2.2.1.
– Duties G2.
– Hearings C5.4.1.; C6.4.
– Meetings G2.3.2.
– Minimum Number G2.2.
– Motorsport UK Appointed G2.2.
– Penalties C2.
– Powers and Responsibilities G2.4.-2.6.
– Qualification G2.1.2.
– Report D26.4.4.; G2.6.
Stop Lines
– Autotests M7.3.; M21.
– Rallies R25.6.1.; R26.2.1.-26.2.3.
– Race Q12.24.1.; Q12.15.; Q4.1.
Stopped
– Speed S9.3.2.
Stopping after Incident H32.1.7.
Stopping a Race G5.2.21.; Q12.15.
Stopping a Rallycross N5.3.2.
Sub-Sections
– Cross Country Trials P42.4.3.-42.4.6.
– Trials T6.3.5.
Supplementary Regulations D8.1.2.
– Alterations D11.1.
– Contents D10.1.
– Instruction to Competitors D8.1.4.
Suspension C2.6.
Tabards D32.4.
Teams H34.1.3.
Team Recovery P21.; P52.
Technical Commissioners G7.1.;G7.6.; G10.2.1.; C3.1.; C5.3.5.; C6.3(c).
Technical Compliance J5.
Television
– Installation E2.2.5.
Tests (Autosolos) M6.-7.; M23.
Tests (Autotests) M6.-7.; M14.-15.; M18.; M20.
Thirty Second Starts
– Hill Rallies P15.6.
– Rallies R26.6.1.-26.6.2.
'Three-quarters Time' Rule P33.4.; R12.7.
Tickets D32.3.
Ties D25.1.17.
– Autotests M9.3.
– Cross Country P29.1.; P43.3.
– Rallies R15.2.2.; R40.1.2.
– Speed S9.5.6.
– Trials T7.4.2.
Time
– Cross Country P30.1.
– Rallies R12.6.; R30.1.2
– Maximum Lateness P31.5.; P33.2.1.; R10.5.1.; R12.2.7.; R31.2.5.
Time Penalty
– Race G5.3.7.; C2.3.
Time
– Trials T8.6.-8.10.
Timed Sections
– Cross Country P5.5.; P10.; P42.9.; P48.
Timing
– Accommodation E2.5.
– Autotests M9.2.
– Light Beam S3.2.1(a).; S10.9.; G6.5.8.
– Cross Country P42.9.; P48.
– Race Q12.2.
– Requirements G6.5.
– Start Q12.9.11.
– Strut S10.9.
Timekeepers G6.1.; G6.2.
– Chief Timekeeper G6.1.4.; G6.2.6.
– Duties and Powers G6.2.
– Expenses G17.10.
– Facilities E2.5.
– Judges of Fact G6.2.7.
– Laser Equipment G6.6.2.
– Rallies G6.5.10.; G6.6.1.
– Requirements G6.4.
Tobacco Advertising H27.1.
Touring Assembly D5.1.2.(a).; Section B
Towing Eye Q13.1.3.
Track Licence
– Application E1.4.
– International E1.3.1.
– National E1.2.1.
– Safety E2.2.1.
Track Regulations (Driving)
– All Events C1.1.5.
– Race Q12.17.
– Speed S9.3.1.
Training Day D5.1.2.(g).
Training
– Rescue Crews F5
Treasure Hunt D5.1.2.(c); R17.2.
Trials Section T
– Age T4.
– Car T11.
– Classic Reliability T2.1.; T8.; T10.
– First Aid T1.3.19.
– Index of Performance T7.3.4.
– Numbers T5.
– Observed Sections T6.
– Results T7.
– Spill Kit T1.3.24.; T9.8.3.
– Stop and Restart T8.1.8.
– Sub-Sections T1.3.16.-1.3.18.
– Technical Regulations T9.-13.1.
Trials Organisation T 1.
Tribunals A3.
Truck Racing E2.2.7.; Q14.
– Licences H18.1.
Twelve Car Rallies D4.5.(a).; R16.3.
Tyre Changing on Grid Q12.19.12.(iv).
Tyre Eligibility J5.9.; Q13.6.; R18.4.; R19.7.; R20.1.14.; R48.5.; R49.9.; T10.9.3., T10.9.4.; T11.12.; U20.; Section L
Tyre Pressures P5.7.; P10.1.; T1.3.22; T11.12.8.
Tyre Regulations Section L
Tyre Softeners, Use of J5.9.5.
Unrecognised Clubs and Organisations D28.1.
Unauthorised Competitions D28.1.; E1.1.1.; C1.1.10.
Unauthorised Notes P36.3.; P51.4.; R9.1.5.; R24.7.; R25.9.
Unfair Advantage G5.3.7.; C2.3.
Upgrading
– Events D4.1.5.; D4.4.; M1.2; P1.1.3.; R1.5.
– Licences H13.2.1.
– Signatures G2.4.12.; G5.2.19; H13.2.1.; H25.1.2.
Vehicle
– Categories J1.2.
– Change of D25.1.12.
– Dismantling J3.1.4.
– Eligibility J3.1.4.
– Inspection Costs D25.1.11.
– Post Event Scrutineering J3.1.4.
– Right to Exclude D25.1.7.; G5.3.1.
– Unsafe J3.1.2.;J5.19.1.; J5.20.; Section K
Vehicle Timed Trials
– Cross Country P10.1.; P48.
– Rally R44.1.
Vehicle Trials
– Cross Country P5 ; P41.1.-43.4.
Veteran Rally D4.5.(j); R17.3.
Videos/Cameras G10.3.; J5.20.5.; Q4.7.5.
Video Evidence G10.3.
Vintage Rallies R16.2.
Visa
– Foreign Event H33.1.
Visors/Goggles K11.; P25.1.; P57.3.2.
Warming up Laps/Formation Lap Q12.12.
Warning Notices D31.1.
Weaving Q12.21.
Weighing Equipment E4.1.4.
Wet Weather Q1.4.; Q12.9.8.
Winch Recovery P8.1.; P46.
Width of Track E2.2.3.
Windscreen Tinting J5.2.10.
Yellow 'Novice' Square Q11.4.4.

Part 4:

Motorsport UK Directory

Motorsport UK Directory 2022

34th Edition

The Motorsport UK Directory, now in its 34th year of publication, has several categories to choose from with more than 50 individual entries. It is part of the Motorsport UK Yearbook and is available online at MotorsportUK.org

© The contents of this book are copyright and must not be reproduced without prior consent of Motorsport UK.

Category	Page	Category	Page
Airport Parking	446	Kart Equipment	453
Automotive Accessories	446	Lubricants	453
Automotive Destination	446	Medicals	453
Batteries	446	Motor Race Circuits	454
Breakdown	447	Motorsport Merchandise	454
Carbon Repairs	447	Motorsport Products	454
Communications Equipment	447	Noise Measurement	455
Control Fuels	447	Oil Companies	455
Control Systems	448	Outdoor Clothing	455
Data Logging	448	Prototyping	455
Driver Coaching	448	Publications	456
Esports	448	Rally Plates/Signs	456
Experiences	448	Rally Schools	456
Ferry Travel	449	Retail	457
FHR Systems	449	Roll Bars/Cages	457
Finance	449	Seatbelts	458
Fire Extinguishers	449	Seats	458
Fuel Analysis	450	Subscriptions	459
Fuels	450	Tools	460
Garage Equipment	451	Track Days	460
Helmets	451	Tyres	460
Hotels	451	Tyre Warmers	462
Instruments	452	Wheels	462
Insurance	452	Wire Wheels	462
		Useful Addresses/Contacts	463

The Motorsport UK Directory is compiled by Motorsport UK. Motorsport UK has not tested the products, equipment or services listed. These listings do not imply any form of endorsement (with the exception of the ARDS Racing Schools, ARKS Kart Schools, BARS Rally Schools and AHASS Hillclimb Schools).

Every care is taken to ensure the directory is accurate and up to date.

Visit www.motorsportuk.org, the official website of Motorsport UK, for information on all activities and events.

Airport Parking

APH

Tel: 01342 859536
Web: www.aph.com

Motorsport UK members receive great discounts off APH prices at all participating airport car parks and lounges throughout the UK.

Automotive Accessories

Power Maxed

Unit 3B, Wellington Road, Waterloo Park, Bidford-on-Avon, Warwickshire, B50 4JH
Tel: 01789 330668
Web: www.powermaxed.com

Launched in 2014, Power Maxed has developed a market-leading range of products, including Valeting, Detailing, Lubricating Sprays, fuel additives, adhesives and sealants, all manufactured from its UK base.

Automotive Destination

Bicester Heritage

The Station Armoury, Building 123, Buckingham Road, Bicester OX26 5HA
Tel: 01869 327 928
Email: hq@bicesterheritage.co.uk
Web: www.bicesterheritage.co.uk

Based at the beautiful former RAF Bicester Bomber Station, Bicester Heritage is home to over forty specialist automotive businesses and represents the UK's only Centre of Excellence for historic motoring enterprise. Operating as a business campus, it hosts regular events, offers film and photography location use and test track facilities.

Bicester Motion

Building 123 – The Station Armoury, Buckingham Road, Bicester, OX26 5HA
Tel: 01869 327 928
Email: hq@bicestermotion.co.uk
Web: www.bicestermotion.co.uk

Bicester Motion is creating an incomparable automotive and aviation visitor attraction. Offering an authentic collection of dynamic and inclusive experiences showcasing the breadth of British automotive and aviation culture past, present and future. Bicester Motion operates Bicester Heritage, the UK's first business campus for historic motoring enterprise.

Batteries

DMS Technologies

Belbins Business Park, Cupernham Lane, Romsey, Hampshire, S051 7JF
Email: sales@dmstech.co.uk
Web: www.dmstech.co.uk

Varley Red Top and Varley Lithium (Motorsport UK registered) Batteries from DMS technologies has been the PREMIER choice for the professional and club racing driver for 60 years. The batteries have evolved over time to meet the changing demands of both motor racing and rally disciplines. Our batteries are available through a wide network of specialist motorsport and aviation retailers.

Breakdown

RAC

Tel: 0330 1598727
Web: www.rac.co.uk

Complete peace of mind with the RAC. RAC patrols will come to your rescue day or night. And because they fix 4 out of 5 vehicles at the roadside in just 30 minutes, on average, you'll be back on the road before you know it. If they can't repair you there and then, they'll tow you to a garage, and if you choose onward travel, you'll get a hire car to keep you moving.

Carbon Repairs

Remas Composites

Unit 10 Everdon Park
Heartlands Business Park
Daventry NN11 8YJ
Tel: 01327 871847
Web: www.remascomposites.com / www.carbonfibrerepair.com

Remas Composites are specialists in Carbon Fibre & Grp repair, including bespoke manufacturing capabilities. Offering both structural & cosmetic repair services to the motorsport, exotic car, historic & marine markets.

Communications Equipment

Tower Communications

12 The Rampart,
Haddenham,
Cambs, CB6 3ST
Tel: 01353 749859
Email: sales@ towercomms.co.uk
Web: www.towercomms.co.uk

Two-Way Radio Sales and Service. New and Second-user units available. Well known supplier of radios and handhelds for Motorsport UK Safety and Medical channel. Supplier of short-term hire radios, including mobiles, handhelds, base stations and repeaters, available for all your events.

Control Fuels

Anglo American Oil Company

58 Holton Road,
Holton Heath Trading Park,
Poole, Dorset BH16 6LT
Tel: 01929 551557
Email: info@aaoil.co.uk
Web: www.aaoil.co.uk

Anglo American Oil Company Ltd provides an excellent combination of service, quality and price of control fuels to championships.

Sunoco is the largest supplier of racing fuels to championships in the world, of which the most famous are NASCAR, NHRA and British GT. We have been supplying major championships in Europe since 2001 and can support small accounts, as well as large championships, with a personalised service of any type of high-performance fuel (unleaded and leaded petrol, GTL diesel and various blends of ethanol). We work closely with various championships to maximise each series marketing potential at the same time as we offer a comprehensive fuel testing service to assist technical scrutineers.

We also supply Driven Racing Oil and R racing brake fluids as well as PJ1 drag strip compound in Europe.

Haltermann Carless UK Ltd

Grove House,
Guildford Road,
Leatherhead,
Surrey KT22 9DF
Tel: 07900 743329
Email: astuart@h-c-s-group.com
Web: www.haltermann-carless.com

Haltermann Carless with its brands Carless Hiperflo™ & ETS Racing Fuels are a range of advanced racing and control fuels designed to give motorsport competitors closely controlled and ultra-consistent high performance. Fuels comply to Motorsport UK, FIA, FIM, CIK & MSA regulations. Haltermann Carless is at the leading edge of sustainable fuels technology with the ability to produce up to 100% sustainable fuel. We also provide support to motorsport governing bodies and series managers with an onsite fuel dispensing & analysis service.

VP Racing Fuels

Official UK importers:
Old Hall Performance,
www.oldhallperformance.com/sales
@oldhallperformance.com/+44 (0) 2476 717 100

VP Racing Fuels is best known as the World Leader in Fuel Technology®, fuelling champions in virtually every form of motorsport on land, sea, and air since 1975. VP offers a wide range of fuels and consumer products to suit all racers, across the UK and Europe.

www.vpracingfuels.com

Control Systems

Moog

Ashchurch, Tewkesbury,
Gloucestershire GL20 8TU
Tel: 01684 858000
Email: mjones@moog.com or rsteele@moog.com
Web: www.moog.com/motorsport

Moog is an established actuation supplier to high end motor racing teams including Formula 1. In addition, high performance car manufacturers can also benefit from Moog technology to precisely control drive-train, chassis, braking, steering and advanced aerodynamic systems.

Moog also supplies automotive test systems, and Level-D racing driver training simulators.

Data Logging

Racelogic – VBOX Motorsport

Unit 10,
Swan Business Centre,
Osier Way, Buckingham,
MK18 1TB
Tel: 01280 823 803
Email: support@racelogic.co.uk
Web: www.vboxmotorsport.co.uk

Racelogic make the VBOX Motorsport range of industry standard video data loggers used by thousands of drivers and coaches looking for improvement in performance; and race series organisers for making accurate and timely stewards' decisions. Designed to be used by anyone – without needing to be a race engineer.

Driver Coaching

Driver61

Web: www.driver61.com

Get faster, more consistent and more confident on the limit with Driver61's on-track training programmes. Driver61's training focuses on giving you the skills to push yourself faster, shortcutting your journey to the podium.

Esports

iRacing

Web: www.iracing.com

Motorsport UK has partnered with iRacing to offer members a free three-month iRacing subscription code to get you up and running in the world of Esports.

Playseat

Web: www.playseatstore.co.uk

Playseat® is the global leader in racing simulators for everyone. From novice to professional, young or experienced, you will definitely enjoy the thrill of racing at home.

Experiences

Silverstone Interactive Museum

Silverstone Circuit,
Towcester,
Northamptonshire, NN12 8TN
Tel: 03339 999886
Web: www.silverstone-experience.co.uk

The Silverstone Interactive Museum is an immersive visitor attraction that celebrates the past, present and future of Silverstone and British motor racing. Over 60 hands-on exhibits give visitors the opportunity to try out a variety of activities – from operating a wind tunnel, taking part in a pit stop and climbing into a replica Grand Prix car.

Ferry Travel

Nutt Travel
in partnership with **Stena Line**

Tel: 028 7035 1199
Web: www.nutttravel.com

Based in Northern Ireland, Nutt Travel pride themselves on providing a fast and friendly service at very competitive prices. They provide a personal service where clients can talk to experienced staff who will tailor their package to best meet their requirements.

Motorsport UK is pleased to offer members exclusive deals on ferry crossings and accommodation.

FHR Systems

SCHROTH Racing

Web: www.schroth.com

SCHROTH Racing is a leading supplier of light-weight harnesses, head and neck devices and related safety equipment worldwide! SCHROTH supplies to all levels of racing, including F1, DTM, IRL, WRC, NASCAR, WTCC, Dakar Rally, FIA GT and racing series around the world as well as supplying to OEMs such as Porsche, Audi, Lamborghini, Lotus, Bugatti, AMG, and Radical! Patented technology includes our lightweight rotary buckle, SlipStop System for head and neck devices and our Hybrid harnesses design.

Visit www.schroth.com/racing to see why SCHROTH is the fastest growing manufacturer in high quality racing and performance restraints!

Finance

Building B,
6 Kirtlington Busness Centre,
Kirtlington, OX5 3JA
Tel: 01869 351512
Web: www.classicandsportsfinance.com

Following 20 years within the motorsport sector, we are the official Motorsport UK finance partner, who offer all aspects of funding for motorsport activity. Finance and capital provided for the purchase of historic and modern motor cars, transporters, garage equipment and the purchase of complete race teams. Full capital release schemes for assets currently owned. Private individuals or business entities. Established across all aspects of racing!

Fire Extinguishers

Fire Extinguisher Valve Co

Unit B3 Ford Airfield Industrial Estate,
Ford Nr Arundel,
West Sussex BN18 0HY
Tel: 0044 (0)1243 555566
Email: sales@f-e-v.co.uk
Web: www.f-e-v.co.uk

FEV Fire Suppression are a leading manufacturer of a wide variety of fire suppression systems, handheld extinguishers and solutions for motorsport. Our products suit a huge range of vehicles, requirements and budgets. All FIA and Motorsport UK standards can be met by our innovative products. FEV Fire Suppression are chosen suppliers to major top teams and manufacturers across the motorsport industry and are recognised for our high quality products and customer service.

Please contact us to discuss

Lifeline Fire & Safety Systems Ltd

Falkland Close,
Coventry, CV4 8AU UK
Tel: +44 (0)24 7671 2999
Email: sales@lifeline-fire.co.uk
Web: www.lifeline-fire.co.uk

The new breed of Lifeline fire suppression systems for 2022 and beyond puts driver safety into a new dimension.

With even faster and more efficient deployment of extinguishant, all systems have been homologated to conform to either FIA Technical list numbers 16 or 52, making them the most advanced in the world.

Together with a supporting range of safety equipment including Race Harnesses, Mirrors, Quick Release steering wheel bosses, Rain Lights and Towing Straps.

PD Extinguishers

Revidge Fold, Revidge Road,
Blackburn, Lancashire,
BB1 8DJ
Tel: 01254 954954
Email: chris@pdextinguishers.co.uk
Web: www.pdexitnguishers.co.uk

PD Extinguishers was started by regular rally competitor, organiser and scrutineer, Chris Woodcock concerned that a 10 year life on Extinguishers was another cost barrier to competitors.

All PD Extinguishers Stainless Steel systems have a 16 year life due to their high tensile strength and corrosion resistance. After an 18 month program of development testing and certification, he has now attained FIA homologation on 2 systems using aerospace grade AFFF and 3M Novec1230 both available with mechanical and electronic activation, along with a range of hand helds to meet all requirements

Fuel Analysis

Haltermann Carless UK Ltd

Grove House,
Guildford Road,
Leatherhead,
Surrey KT22 9DF
Tel: 07900 743329
Email: astuart@h-c-s-group.com
Web: www.haltermann-carless.com

Haltermann Carless with its brands Carless Hiperflo™ & ETS Racing Fuels are a range of advanced racing and control fuels designed to give motorsport competitors closely controlled and ultra-consistent high performance. Fuels comply to Motorsport UK, FIA, FIM, CIK & MSA regulations. Haltermann Carless is at the leading edge of sustainable fuels technology with the ability to produce up to 100% sustainable fuel. We also provide support to motorsport governing bodies and series managers with an onsite fuel dispensing & analysis service.

Fuels

Anglo American Oil Company

58 Holton Road,
Holton Heath Trading Park,
Poole, Dorset BH16 6LT
Tel: 01929 551557
Email: info@aaoil.co.uk
Web: www.aaoil.co.uk

Anglo American Oil Company Ltd provides an excellent combination of service, quality and price of control fuels to championships.

Sunoco is the largest supplier of racing fuels to championships in the world, of which the most famous are NASCAR, NHRA and British GT. We have been supplying major championships in Europe since 2001 and can support small accounts, as well as large championships, with a personalised service of any type of high-performance fuel (unleaded and leaded petrol, GTL diesel and various blends of ethanol). We work closely with various championships to maximise each series marketing potential at the same time as we offer a comprehensive fuel testing service to assist technical scrutineers.

We also supply Driven Racing Oil and R racing brake fluids as well as PJ1 drag strip compound in Europe.

Haltermann Carless UK Ltd

Grove House,
Guildford Road,
Leatherhead,
Surrey KT22 9DF
Tel: 07900 743329
Email: astuart@h-c-s-group.com
Web: www.haltermann-carless.com

Haltermann Carless with its brands Carless Hiperflo™ & ETS Racing Fuels are a range of advanced racing and control fuels designed to give motorsport competitors closely controlled and ultra-consistent high performance. Fuels comply to Motorsport UK, FIA, FIM, CIK & MSA regulations. Haltermann Carless is at the leading edge of sustainable fuels technology with the ability to produce up to 100% sustainable fuel. We also provide support to motorsport governing bodies and series managers with an onsite fuel dispensing & analysis service.

VP Racing Fuels Ltd

Official UK importers:
Old Hall Performance,
www.oldhallperformance.com/sales
@oldhallperformance.com/+44 (0) 2476 717 100

VP Racing Fuels is best known as the World Leader in Fuel Technology®, fuelling champions in virtually every form of motorsport on land, sea, and air since 1975. VP offers a wide range of fuels and consumer products to suit all racers, across the UK and Europe.

www.vpracingfuels.com

Garage Equipment

Lista (UK) Ltd

14 Warren Yard
Warren Farm Office Village
Wolverton Mill, Milton Keynes MK12 5NW
Tel: 01908 222 333
www.lista.com
Email: david.kendall@lista.com

Lista are the leaders for drawer cabinets, workbenches and general storage in the global motorsport market. From race bays to a simple tool box, we can accommodate every requirement. We offer a complete design, supply and installation solution. Please contact us for a quotation to suit every budget.

Helmets

ARAI Motor Sport Helmets

Email: darren.thipthorpe@moto-direct.com
https://www.whyarai.co.uk/motorsport-locator

Arai have been handcrafting performance helmets in Japan for over 50 years.

Arai helmets are designed for all types of motorsport – from Cadet Karting with the fabulous CMR rated CK6 helmet through to the stunning carbon fibre GP-6RC as worn by F1 racers, including Sebastian Vettel and Max Verstappen – so you can be sure of the superior performance of your helmet. Every Arai helmet is handmade by master craftsman in Japan and available at your local motorsport dealer.

Hotels

Bicester Hotel Golf & Spa

Address: Green Lane, Chesterton,
Bicester, Oxfordshire OX26 1TH
Phone: 01869 241204
Web: www.bicesterhotelgolfandspa.com

Bicester Hotel, Golf and Spa is a stunning 4-star resort set in the rural countryside of Oxfordshire, the resort offers 2 state-of-the-art gyms, an indoor swimming pool, a hydro spa, Elemis Spa, floodlit tennis courts, outdoor swimming lake, outdoor assault course and over 65 fitness classes every week.

Instruments

ACES

26 Gainsborough Drive, Lawford, Manningtree, Essex, CO11 2JU
Tel: 01206 395324
Email: sales@aceserve.co.uk
Web: www.aceserve.co.uk

Designers and manufacturers of high-quality innovative products aimed at the motor sport driver and enthusiast, which includes the SureShift2, a fully featured, high-precision multistage shiftlight with intelligent max rpm tell-tale.

BDN Automotive

51 Kossuth Lajos Street, Rabattotos, 9766, Hungary
Tel: 07367 196589
+36308535383
Web: www.bdn-automotive.com

BDN Automotive's mission is to provide state of the art, affordable internal combustion engine development systems (combustion analysers), and advanced engine control strategies to customers in all levels of motorsport, and automotive market. Get the most out of your engine, and let's win races together!

Insurance

Adrian Flux

East Winch Hall, East Winch, Kings Lynn, PE32 1HN
Tel: 0800 085 6186
Email: contact-us@adrianflux.co.uk
Web: www.adrianflux.co.uk/motorsport

As the UK's largest specialist insurance broker, Adrian Flux have policies to suit all areas of Motorsport including track day, trailer, race and rally vehicle, transporter and motorcycle. We also offer discounts for club membership of up to 15% so get in contact today for all of your insurance requirements.

Bluefin Sport

Bluefin Sport, The Paragon, 32-36 Victoria Street, Bristol, BS1 6BX
Tel: 0345 872 5060
Web: www.bluefinsport.co.uk

Bluefin Sport is a specialist division of Marsh Ltd with dedicated teams across the UK offering insurance broking and risk management advice to the world of sport. Dealing with a specialist insurance adviser helps to ensure that your specific risks and exposures are covered.

Grove & Dean Motorsport Insurance

96 Market Place Romford, Essex, RM1 3ER
Tel: +44 (0)1708 606768
Web: www.grove-dean-motorsport.com/

One of Europe's premier on-track insurers for GT, Sports and Single Seater motorsport.

Covering individuals and teams in the UK, Europe and Internationally, our tailor-made products include On-Track/ Track Day Cover, Personal Accident, Team Commercial insurance, Storage & Transit and Liability Cover for motor racing events and meetings. Discounts available for multiple events and annual policies and our dedicated team guarantee a personal service.

With 40 years' experience and extensive knowledge of motorsport, we understand what makes a great motorsport policy. Add to this our competitive premiums and first-class Claims Service and you'll appreciate why so many customers use our service.

Reis Motorsport Insurance

Unit 4 Wheatcroft Business Park,
Landmere Lane, Edwalton,
Nottingham NG12 4DG
Tel: 0115 965 1040
Email: contact@reis.co.uk
Web: www.reis.co.uk

At Reis, motorsport is not only our business, it's also our passion. As a specialist insurance broker, our knowledgeable team can arrange tailored policies for competitors, teams and enthusiasts at all levels. We can cover competition, on event, classic, and sports cars,
as well as commercial schemes for business and event organisers.

Ryan Motorsport Insurance

150 Minories, Suite 609,
London, EC3N 1LS
Tel: +44 (0)1799 524202
Web: www.ryanmi.com

Ryan Motorsport Insurance provides a comprehensive solution for all your motorsport insurance needs. Our website enables you to complete an online quote request form based on the cover you require, and to pay online at a time convenient for you. Our products include – Cover for race and rally cars whilst competing at UK/ worldwide events, Personal Accident for drivers and teams, track day cover, liability coverage for events and meetings, storage and transit insurance for vehicles and equipment. Single events quoted. Discounts available for multiple event/annual policies. With more than 25 years of experience within the motorsport insurance business and having competed in various race and rally championships, managing director Ryan Mone has an extensive knowledge and understanding of the insurance requirements for individuals, companies and teams alike. With the assistance of a dedicated and knowledgeable team of staff we endeavour to provide you with the highest possible levels of service, combined with competitive premiums.

Lubricants

Anglo American Oil Company

58 Holton Road,
Holton Heath Trading Park,
Poole, Dorset BH16 6LT
Tel: 01929 551557
Email: info@aaoil.co.uk
Web: www.aaoil.co.uk

Anglo American Oil Company Ltd was founded in 1999 to supply high performance quality oils and racing fuels to the racing industry. Our modern blending plant and warehouse facilities are ideally situated to quickly dispatch specialist lubricants on a next day service.

We represent Driven Racing Oil and R racing brake fluids in Europe. Our wide range of products and excellent technical knowledge mean that we can cater for any oil related query. We also distribute on an exclusive basis Sunoco and R racing fuels in Europe and the Middle East and are the official fuel of many UK and European championships. In addition to the racing oils and fuels we are the exclusive distributor of PJ1 track compound in Europe. PJ1 (formerly VHT) is a must for all drag racing strips for ultimate grip off the start line.

Medicals

D4 Drivers

Building 1,
Charlesworth Court,
Hotspur Park, Knights Way,
Shrewsbury, Shropshire, SY1 3AB
Tel: 0300 3030 668
Web: www.d4drivers.uk

D4Drivers, one of the UK's leading supplier of motorsport medicals is working with Motorsport UK for the 2020 season to provide national licence medicals to competitors nationwide in one of our 70+ clinics.
We are delighted to offer Motorsport UK members a 20% discount on all national licence medicals.

Motor Race Circuits

Castle Combe

Castle Combe Circuit,
Chipenham, Wiltshire, SN14 7EY
Tel: 01249 782417
Web: www.castlecombecircuit.co.uk

Castle Combe Circuit is The West Country's home of motorsport that's been welcoming fans of racing, car shows and events for over 65 years.

Knockhill Racing Circuit

Dunfirmline, Fife, KY12 9TF
Tel: 01383 723337
Web: www.knockhill.co.uk

Knockhill Racing Circuit, Scotland's National Motorsport Centre, are pleased to offer Motorsport UK members discounts on race tickets, driving experiences and more.

Llandow Circuit

Llandow, Cowbridge,
Vale of Glamorgan,
CF71 7PB
Tel: 01446 796460
Email: info@llandow.com
Web: www.llandow.com

Situated just 20 minutes west of Cardiff, Llandow Circuit is a privately owned and family run venue with a flexible approach and a 'can do' attitude. This makes it the perfect venue for all types of motor related events including car and bike testing, track dates, sprints and exclusive hire.

Llandow is a technically challenging tarmac circuit 1450 long and 9m wide with smooth tarmac surface and a good selection of corners. It has a Motorsport UK National B Sprint License. It is the perfect venue for corporate hospitality events with a neighbouring Motorsport UK Karting centre together with a caravan and camp site.

Silverstone Circuit

Silverstone Circuit,
Towcester, NN12 8TN
Tel: 0844 3750740
Web: www.Silverstone.co.uk

The home of British motor racing.

Motorsport Merchandise

Grandstand Merchandise

Unit 4, Chalker Way,
Banbury, Oxfordshire,
OX16 4XD
Tel: 01869 337554
Web: www.grandstandmerchandise.com

Grandstand are the premier motorsport merchandise destination for authentic team replica clothing and accessories for Formula One, WEC, WRC and sports cars.

Motorsport Products

Grand Prix Racewear

Unit 1, Silverstone Park,
Silverstone Circuit, Northamptonshire NN12 8TN
Tel: 01327 855585
Web: www.grandprixracewear.com/

Grand Prix Racewear have been selling the best of race and kartwear for over 30 years. Founded in 1987 and based at Silverstone Circuit, the home of British motor racing, the company, having recently been acquired, is embarking on an exciting new phase in its development.

LMA Autoparts Ltd

The Green Barn,
Antlands Lane East,
Shipley Bridge,
Surrey RH6 9TE
Tel: 01342 891877
Web: www.lmaautoparts.co.uk

LMA Autoparts are the manufacturers and distributors to the trade of LMA products, speedwell Classic Mini accessories. LMA product ranges are Gauge fittings and pipelines – Electrical Accessories – Stainless braided rubber and PTFE hoses – Silicone hoses – Clips and joiners in Zinc Plated or Stainless – Ball Joints and Rod Ends – Stainless braided brake, clutch and turbo hoses – Speedwell Classic Mini products. All hydraulic hoses, including brake hoses, up to 3in fittings and pipes made to order.

SW Motorsports

Unit 3b, Talbot Rd,
Leyland,
Lancashire, PR25 2ZF
Tel: 01772 378224
Email: info@swmotorsports.uk
Web: www.swmotorsports.uk

Using the latest 3D scanning technology, we produce a millimetre accurate scan of your car. We are then able to produce your bespoke cage within CAD with precision fitment. Our highly trained design team produce work to a high standard, while meeting design requirements for Motorsport UK K-section Motorsport regulations.

Noise Measurement

Cirrus Research

Tel: 01723 891655
Email:
sales@cirrusresearch.com
Web: www.cirrusresearch.co.uk

We are one of the world's leading designers, manufacturers and suppliers of noise measurement equipment, including vehicle noise meters and environmental noise monitors for tracks/circuits. We are proud to offer scrutineers and other Motorsport UK affiliates preferential rates on our equipment, which is backed by our industry-leading 15-year warranty.

Oil Companies

Haltermann Carless UK Ltd

Grove House,
Guildford Road,
Leatherhead,
Surrey KT22 9DF
Tel: 07900 743329
Email: astuart@h-c-s-group.com
Web: www.haltermann-carless.com

Haltermann Carless with its brands Carless Hiperflo™ & ETS Racing Fuels are a range of advanced racing and control fuels designed to give motorsport competitors closely controlled and ultra-consistent high performance. Fuels comply to Motorsport UK, FIA, FIM, CIK & MSA regulations. Haltermann Carless is at the leading edge of sustainable fuels technology with the ability to produce up to 100% sustainable fuel. We also provide support to motorsport governing bodies and series managers with an onsite fuel dispensing & analysis service.

Outdoor Clothing

Cotswold Outdoor

Web:
www.cotswoldoutdoor.com

Cotswold Outdoor have been pr
discover the great outdoors for
offering clothing, equipment and accessories from the very best outdoor brands.

Runners Need

Web:
www.runndersneed.co

Whatever gets you moving, Runners Need is the running specialist and here to help you every step of the way.

Snow+Rock

Web:
www.snowandrock.com

Founded by a small team
of crazy snow sport enthusiasts, Snow+Rock is all about pushing boundaries, breaking rules, never compromising.

Prototyping

ID Mouldings Ltd

Unit 5 Griffin
Business Park,
Walmer Way, Birmingham B37 7UX
Tel: +44 07835 888826
Web: www.idmouldings.com

IID Mouldings incorporating Retro Reproductions manufacture prototypes and low volume production of moulded components in a range of polymers to suit the application.

Using processes which include reverse engineering, 3D printing and/or CAD for prototypes and replacement parts, we can supply high quality, accurate parts in a range of finishes.

Publications

Haynes Publishing

Sparkford, Yeovil,
Somerset, BA22 7JJ
Tel: 01206 256101
Web: www.haynes.com

The creator of the world-famous Owner's Workshop Manual offers a huge range of car and motorcycle repair manuals, with step-by-step guidance to complete each job. Most titles are now available in online formats, including video tutorials, colour pictures and interactive fault-finding tools. Motorsport UK members can save an extra 10% on any purchase at haynes.com

Rally Plates/Signs

Eventsigns Ltd

Unit 6,
Poplar Drive,
Witton, Birmingham B6 7AD
Tel: 0121 344 3141
Email: vaughan@eventsigns.co.uk
Web: www.eventsigns.co.uk

We have over 30 years experience supplying signage to motorsport events.
Eventsigns can supply all the signage and promotional material you may require for your next event:

Rallyplates / Hi viz Correx arrows / stage boards / safety signs & numbers / stickers.
Eventsigns can also supply signage for exhibitions and promotional events:
portable pop up banner systems / printed wallpaper / graphics / PVC banners / pull up banners / Start & Finish gantries.
Vaughan is also a Motorsport UK international rally and national speed timekeeper. We can supply all the timekeeping equipment required for your rally or sprint event. Please contact Vaughan to discuss any requirements you may need.

Macro Motorsport

Tel: 0800 567 7381
Email: sales@macromotorsport.net
Web: www.macromotorsport.net

Macro Motorsport – who else understands what you need and when you need it by? Rally plates and decals, self-cling stickers, control boards, arrows, tabards, waistcoats, stickers. Printed promotional material, safety tape and much, much more ... in fact, anything produced!

Experience of over 30 years and involvement with events throughout the year means that we understand the pressures you are under and work hard to help you deliver.

Rally Schools

Bill Gwynne Rallyschool International

Turweston Aerodrome, Brackley,
Northants NN13 5YD
Tel: 01280 705570
Fax: 01280 701691
Email: info@billgwynne.com
Web: www.billgwynne.com

The world's first professional rally driving school, founder member of the British Association of Rally Schools, recognised by Motorsport UK. Our range of ProRally Driver 1:1 Courses on gravel and tarmac are designed to help drivers from all disciplines, rally, race, classic car, track day and junior to get the most from their driving. Motorsport UK BARS Licence Assessments. The Spinal Track Rally Experience for Disabled Drivers. Training packages for drivers to compete in their first rally. We also offer Corporate or Group RallySport events and gift vouchers for full and half day rally experiences. For more information, please call.

Phil Price Rallying Ltd

Unit 1,
Knucklas Road,
Knighton,
Powys, LD7 1UP
Tel: 01547 550300
Email: info@philprice.co.uk
Web: www.philprice.co.uk

Founder member of the British Association of Rally Schools (BARS). Recognised by Motorsport UK. Our authentic Welsh venue offers genuine forest surfaces, ideal for learning rallying techniques from beginners upwards. Groups are kept small to ensure individual attention and with the use of two rally stages you get loads of hands-on driving. Our team of professional instructors ensures your time spent with us is exciting and rewarding. The majority of the day is spent hands-on practising; you also have a co-driven experience with practice-note instruction, a high-speed passenger 'ride of a lifetime' and finish the day with competitions, then trophy presentation. We offer:

- One-day rally-driving courses
- Corporate/group days
- BARS assessment exams
- Testing facilities

Retail

Halfords

Web:
www.halfords.com

Halfords are pleased to offer Motorsport UK members 10% discount off anything in store.

Halfords has over 460 stores nationwide offering more than 15,000 different product lines, from car parts and cycles through to the latest in-car technology, child seats, roof boxes and outdoor leisure and camping equipment, Halfords has it all!

Roll Bars/Cages

Caged Laser Engineering (SW) Ltd

Unit 12, Ash Farm Business Park,
Radstock. BA3 5EX
Tel: 01761 239133
Email: Alvin@cagedlaser.co.uk
Web: www.cagedlaser.co.uk

Caged Laser Engineering (SW) Ltd is an automotive supply chain manufacturer capable of supporting one-off bespoke applications through to large scale production runs. Based in the southwest of England near Bath, we specialise in end to end fabrication of tubular, sheet metal and various steel sections, with vast experience in aluminium, mild steel, stainless steel and titanium. Supported by an in-house CAD design service, a suite of CNC machines (laser, press brake, tube bender, mill and lathe), a team of experience TIG and MIG welders and a powder coating painting facility, we can help you visualise and realise your automotive needs.

Custom Cages

Units 1-2,
South March,
Long March Industrial Estate, Daventry,
Northants NN11 4PH
Tel: 0044 (0)1327 872 855
Email: sales@customcages.co.uk
Web: www.customcages.co.uk

Serving competitors from club to professional Motorsport level is the driving force behind Custom Cages. We design and manufacture standard and bespoke roll cages in house and supply technical engineering and fabrication services to all levels including teams and manufacturers.

Safety Devices International Ltd

Cambridge House,
Holborn Avenue,
Mildenhall,
Suffolk IP28 7AN
Tel: 01638 713606
Email: motorsport@safetydevices.com

With the latest CAD, CMM and laser scanning technology in house, Safety Devices continue to lead the rollover protection industry after almost 50 years. From historic marques through to latest generation vehicles, Safety Devices produce Europe's largest range of roll cages with over 500 current designs and a back-catalogue of 2000+. Reputed for exceptional design standards, you can be confident your cage will be made from quality materials and be an excellent fit. Most designs meet Motorsport UK/FIA regulations. Find your cage using our website's roll cage selector and buy through our dealer network. For bespoke work, contact us direct.

Tube Direct

Units 1-2, South March,
Long March Industrial
Estate, Daventry,
Northants NN11 4PH
Tel: 0044 01604 931 300
Email: sales@tubedirect.uk
Web: www.tubedirect.uk

Suppliers of steel tube, bending and cutting servies to the motorsport industry. We specialise in a range of materials including CDS510, T45, 25CrMo4 and 15CDV6. We can supply lengths from 1 to 1000 metres, metric and imperial sizes.

Seatbelts

SCHROTH Racing

Email: www.germany@schroth.com
Web: www.schroth.com

SCHROTH Racing is a leading supplier of light-weight harnesses, head and neck devices and related safety equipment worldwide! SCHROTH supplies to all levels of racing, including F1, DTM, IRL, WRC, NASCAR, WTCC, Dakar Rally, FIA GT and racing series around the world as well as supplying to OEMs such as Porsche, Audi, Lamborghini, Lotus, Bugatti, AMG, and Radical! Patented technology includes our lightweight rotary buckle, SlipStop System for head and neck devices and our Hybrid harnesses design.

Visit www.schroth.com/racing to see why SCHROTH is the fastest growing manufacturer in high quality racing and performance restraints! FIA and/or ECE approvals on all models.

Seats

Corbeau Seats Ltd

17 Wainwright
Close,
East Sussex,
TN38 9PP
Tel: 01424 854499
Email: sales@corbeau-seats.com
Web: www.corbeau-seats.com

Established 59 years ago making us the first ever manufacturer in the world to produce competition racing seats. Corbeau today is still at the cutting edge of technical development where Safety, style and comfort are key attributes. Corbeau has a full range of FIA 8855-1999 and FIA 8862-2009 seats to suit most disciplines in motorsport all manufactured in our UK facility.
The full range are all FHR compatible and are available in either GRP, Kevlar and Carbon. Our FIA 8862-2009 Predator SV 4 Point and 6-point GT are produced in Pre-preg Carbon and come with a 10-year FIA homologation.

Check out our full range of Corbeau FIA 8853-2016 harnesses
LAUNCHING in January 2022 the latest FIA 8855-2021 specification seat, will be available in four sizes.

GSM Performance Ltd

Unit 5, High Hazles Road,
Cotgrave,
Nottinghamshire, NG12 3GZ
Tel: +44 (0)115 9893488
Email: sales@GSMPerformance.co.uk
Web: www.gsmperformance.co.uk

GSM provides the perfect combination of choice, expert advice and competitive prices for all your motorsport needs.

GSM Sports Seats has over 125 different motorsport, sports and classic seats available in-store for viewing and testing – to help you find the perfect seat for you and your car.

GSM Performance Brakes provides expert advice on our product range from dozens of brands and manufacturers – we even engineer bespoke parts.

GSM Racewear features race suits, helmets, gloves, boots and Nomex suits from all the leading manufacturers including Sparco, OMP, Simpson and Alpinestars, as well as a huge range of HANS Device, racing harnesses and safety equipment.

Racetech

Unit 3, Heron Court,
Kettlebrook Road,
Tamworth, B77 1AG, UK
Tel: 07401 703 750
Email: sales@racetecheurope.co.uk
Web: www.racetecheurope.co.uk/shop/

Our FIA approved race seats are designed and hand made in New Zealand by our dedicated team who are focused on creating the very best driver racing experience by building the most comfortable and safe race seats in the world.

SCHROTH ProfiSeat

Web: www.schroth.com

With our worldwide name already established in motor racing safety the SCHROTH Racing Profi Seat will bring extra benefits to every racing driver in any car. Our reputation is built on quality and unrivaled experience, which we are now proud to say extends to our SCHROTH Racing Profi Seat, with our technical support staff having over 18 years' experience in making and selling seats in a wide range of championships. The SCHROTH Racing Profi Seat is racing's best individual seat solution. Make your customized Seat Insert!

Subscriptions

Octane

Web:
www.subscribe.octane-magazine.com

Welcome to the wonderful world of classic cars. Octane is the premium monthly magazine celebrating over 100 years of automotive design, from classic Bentleys to the latest BMW.

GP Racing

Web: www.gpracing.com

The world's best-selling F1 magazine, with stunning photography, expert analysis, unrivalled journalism and exclusive behind-the-scenes access to the glamorous and adrenaline-fuelled world of Formula 1.

Motorsport Magazine

18-20 Rosemont Road,
London NW3 6NE
Tel: 02073 498484
Web: www.motorsportmagazine.com/

The voice of authority on Formula 1, MotoGP, sports cars, historic motor sport and all other forms of racing.

Motorsport News

Web:
www.motorsport-news.co.uk

The voice of British motorsport and essential reading for anyone in this passionate community, Motorsport News is the UK's only weekly motorsport newspaper.

Readly

Web:
www.gb.readly.com/

Motorsport UK has partnered with Readly, the new way of reading magazines on tablets and smartphones.

WRC+

Web: www.wrc.com

WRC+ All Live is the official video platform of the FIA World Rally Championship (WRC). Watch WRC action like never before.

Tools

Wera

Web: www.wera-tools.co.uk

Wera Tools is a global tools' specialist that firmly believes its tools make life simpler, safer and 'full of joy' for users.

Track Days

OpenTrack Events Ltd

45 Jeavons Lane, Great Cambourne, Cambridge CB23 6AF, UK
Tel: 01954 710 911
Web: www.opentrack.co.uk

Established in 2008, Opentrack considers itself as one of the most passionate track day companies in the UK and is offering Motorsport UK members 10% off their events.

Run by Dave Woodall, who states his sole aim is making sure drivers have a great time on his events with safe, high quality track time, be it a evening at Brands Hatch or a full day at Spa.

Tyres

Avon Tyres Motorsport

Cooper Tire & Rubber Co. Europe Ltd
Bath Road, Melksham, SN12 8AA
Tel: 01225 35 7855
Email: avonmotorsport@coopertire.com
Web: www.avontyres.com/en-gb/motorsport/

Avon Tyres Motorsport and Cooper Tire motorsport offer a huge range of world class motorsport tyres to suit almost every application.

- Circuit Racing
- Sprint and Hillclimb
- Rallycross
- Rally – Including our new Cooper Tires Rally Range
- Trackday and Fast Road
- Classic and Historic
- Motorcycle and Sidecar

For technical advice and details of your local specialist distributor get in touch with our Motorsport department.

Cooper Tires Motorsport

Cooper Tire & Rubber Company Europe Ltd.
Bath Road, Melksham SN12 8AA
Tel: +44 1225 35 7855
Email: coopermotorsport@coopertire.com
Web: www.coopertire.co.uk/motorsport-tires/

Avon Tyres Motorsport and Cooper Tires Motorsport offer a huge range of world class motorsport tyres to suit almost every application.

- Circuit Racing
- Sprint and Hillclimb
- Rallycross
- Rally – Including our new Cooper Tires Rally Range
- Trackday and Fast Road
- Classic and Historic
- Motorcycle and Sidecar

For technical advice and details of your local specialist distributor get in touch with our Motorsport department.

Longstone Tyres

Doncaster Road, Bawtry,
DN10 6NX
Tel: 01302 711123
info@longstonetyres.co.uk
www.longstonetyres.co.uk

Longstone Tyres are a leading supplier of the widest range of vintage and classic competition tyres such as Dunlop Racing, Pirelli P7 Corsa Classics and Michelin TB and XAS FF. Longstone are also the UK agent for "Ruote Borrani Milano" wheels. The original alloy rimmed wire wheels that were fitted to the racing cars and supercars of the 40's, 50's and 60's. A Borrani wheel is only still a Borrani after it has been respoked if it has been done by an official Borrani agent. Longstone Tyres now have the facility to have your competition Borrani wheel rebuilt, in Milan at the Borrani, factory in 2 weeks.

Michelin Tyre PLC

Campbell Road Stoke-on-Trent ST4 4EY
Tel: 0845 366 1535
Fax: 01782 401852

Michelin offers a wide range of high-performance road, track day, classic and competition tyres which benefit from its success in motorsport. These have included endurance racing, WRC, MotoGP, Formula 1 and 21 consecutive Le Mans 24 hour victories.

For technical advice and details of our specialist suppliers please contact Michelin Technical Services in the first instance on 0845 366 1535.

Contact: Michelin Technical Services

Nankang Tyre UK

1 SGC Business Park, Oldbury Road,
West Bromwich, West Midlands, B70 9DP
Tel: 0121 5005010
Email: jamie@nankangtyre.co.uk
Web: www.nankangtyre.co.uk

Nankang motorsport tyres have race proven track performance. The AR-1 and NS-2R have been selected by multiple championships as control tyres and by numerous open tyre series.

Pirelli Tyres Ltd

Derby Road, Burton-on-Trent,
DE13 0BH
Tel: 01283 525252
www.pirelli.co.uk

Motorsport UK have formed a new partnership with Pirelli Tyres, meaning all members can now benefit from an exclusive offer from Pirelli. Pirelli's recognised link to motorsport has seen the introduction of many motorsport innovations into its consumer products, always ensuring high levels of performance and safety.

For more information, log-on to the Motorsport UK member portal, or visit Pirelli.co.uk/msuk

Toyo Tires

Shipton Way,
Rushden, Northants, NN10 6GL
Tel: 01933 411144
Email: info@toyotyre.co.uk
Web: www.toyo.co.uk

Toyo Tyre UK are a wholly owned subsidiary of Toyo Tire Europe GmbH Responsible for the sales and marketing of the Toyo Tires brand in the UK Tyres: Motorsport, High Performance Road, All Season, Winter, SUV, 4x4, Van, Passenger, Light Truck.

Tyre Warmers

M.A. Horne Ltd

Unit 9,
Enterprise Park, Ebblake Industrial Estate,
Verwood, Dorset, BH31 6YS
Tel: 01202 822770
Email: mark@m-a-horne.co.uk
Web: www.m-a-horne.co.uk

Supplier to Formula 1 champions since 1985. Formula 1: Williams, Ferrari, Renault F1, McLaren, Red Bull Racing, Mercedes F1, Force India F1, BMW F1, Super Aguri. Sole supplier to Indy Racing League, Earls Indy, Rally Worldwide.

Touring: German Super Tourers, Touring Cars Worldwide, A1 GP. Motorcycles: Suzuki GP, Suzuki British Superbikes, Sert Suzuki Endurance Team, Honda, K Roberts, Team

Rainey, Kawasaki, Marlboro-Yamaha, Ducati Superbikes.

Wheels

Revolution Wheels International Ltd

2 Eco Court, Latimer Way, Sherwood Energy Village, Ollerton,
Nottinghamshire NG22 9QW. UK
Tel: +44 (0) 1623 860000
Mob: +44 (0) 7702 845264
Email: info@rwil.org.uk
Web: www.revolutionwheels.com

Revolution Wheels was formed in 1967 and over its 50-year history has supplied some of the most prestigious drivers and teams throughout the world of motorsport. The company has continued to offer its iconic 4 Spoke, 5 Spoke and RFX models but has adapted them to utilise modern day technologies such as Flow-Forming as well as advances in material and heat treatment technology. The CR10 flow-formed race wheel continues to grow and now covers 15in to 20in sizes and a variety of widths. Also recently launched is a lightweight 8 Spoke Classic race wheel in 13in, 14in and 15in sizes for the Historic racing scene.

Speedline Corse

SL Corse Ltd, Haybrook Industrial Estate,
Telford TF7 4QW UK
Tel: 01952 582825
Email: info@speedlinecorse.co.uk
Web: www.speedlinecorse.net

The Strength of Experience.
The specialist motorsport division of one of the World's premier wheel manufacturers, Speedline Corse's advanced production processes, including our unique flow forming technology, have enabled us to supply premium racing and rally wheels for leading motorsport teams and car manufacturers since 1975.

Speedline Corse customers have won 83 FIA sanctioned world championship titles to date as well as countless national and regional championships across the globe.

Wire Wheels

Borrani

Doncaster Road, Bawtry,
DN10 6NX
Tel: 01302 711123
Email: sales@borrani.com
Web: www.borrani.com

Longstone Tyres are a leading supplier of the widest range of vintage and classic competition tyres such as Dunlop Racing, Pirelli P7 Corsa Classics and Michelin TB and XAS FF. Longstone are also the UK agent for "Ruote Borrani Milano" wheels. The original alloy rimmed wire wheels that were fitted to the racing cars and supercars of the 40's, 50's and 60's. A Borrani wheel is only still a Borrani after it has been respoked if it has been done by an official Borrani agent. Longstone Tyres now have the facility to have your competition Borrani wheel rebuilt, in Milan at the Borrani, factory in two weeks.

Useful Addresses/Contacts

Association of Motorsport Recovery Operators (AMRO)

Email: secretary@amro.org.uk
Web: www.amro.org.uk

Autograss Racing: The National Autograss Sports Association

46 Brookside, Alconbury,
Huntingdonshire PE28 2EP
Tel: 07795 146133
Email: jeffrey.parish@national-autograss.co.uk
Web: www.national-autograss.co.uk/contact

British Lawn Mower Racing Association Ltd

10 Thurne Way
Rudgwick, Horsham
West Sussex RH12 3ER
Tel: 01403 823535
Email: webmaster@blmra.co.uk
Web: www.blmra.co.uk

Contact: Pete Hammerton

British Trial and Rally Drivers' Association

9 Brookside Drive
Catshill, Bromsgrove
Worcestershire B61 9LD
Tel: 01527 878192
Web: www.btrda.com

Contact: Simon Harris

CIK-FIA

(Commission Internationale de Karting)
2 Chemin de Blandonnet, CH-1215, Geneve, Switzerland
Tel: +41 (0)22 306 1080
Fax: +41 (0)22 306 1090
Email: cik@fia.com
Web: www.cikfia.com

Federation Internationale de Motorcyclisme

11 Route Suisse, CH-1295, Mies, Switzerland
Tel: +41 (0)22 950 9500
Fax: +41(0)22 950 9501
Email: info@fim-live.com
Web: www.fim-live.com

Contact: Ignacio Verneda, chief executive officer

FIA

Headquarters
8, place de la Concorde
75008 PARIS, France
Tel: +33 (0)1 43 12 44 55
Fax: +33 (0)1 43 12 44 66
Web: www.fia.com

Formula 1
Email: WebMaster@Formula1.com

Motor Cycle Sport: The Auto Cycle Union

ACU House, Wood Street, Rugby CV21 2YX
Tel: 01788 566400
Email: admin@acu.org.uk
Web: www.acu.org.uk

Motorsport Ireland

34 Dawson Street, Dublin 2, Ireland
Tel: +353 (0)1 677 5628
Fax: +353 (0)1 671 0793
Email: info@motorsportireland.com
Web: www.motorsportireland.com

Royal Society of Wildlife Trusts

The Kiln, Waterside, Mather Road,
Newark, Nottinghamshire NG24 1WT
Tel: 01636 677711
Email: enquiry@wildlifetrusts.org
Web: www.wildlifetrusts.org

RSAC Motorsport Ltd

PO Box 3333, Glasgow G20 2AX
Tel: 08432 893953
Email: mail@rsacmotorsport.com
Web: www.rsacmotorsport.com

Society of Automotive Engineers

9 Tixall Road, Hall Green,
Birmingham, West Midlands B28 0RU
Tel: 0121 2706592
Web: www.sae.org

Society of Motor Manufacturers & Traders (SMMT)

71 Great Peter Street, London SW1P 2BN
Tel: 020 7235 7000
Fax: 020 7235 7112
Web: www.smmt.co.uk

Speedway Control Bureau

ACU House, Wood Street, Rugby,
Warwickshire CV21 2YX
Email: info@scbgb.co.uk
Web: www.scbgb.co.uk

Sport and Recreational Alliance

Holborn Tower
137-145 High Holborn
London WC1V 6PL
Tel: 020 7976 3900
Web: www.sportandrecreation.org.uk

Sport England

21 Bloomsbury Street, London, WC1B 3HF
Tel: 0345 850 8508
Email: funding@sportengland.org
Web: www.sportengland.org

Sport Northern Ireland

2a, Upper Malone Road, Belfast BT9 5LA
Tel: 02890 381222
Email: info@sportni.net

Sport Scotland

Doges, Templeton of the Green,
62 Templeton Street, Glasgow G40 1DA
Tel: 0141 5346500
Web: www.sportscotland.org.uk

Sport Wales

Sophia Gardens, Cardiff CF11 9SW
Tel: 0300 300 3111
Fax: 0300 300 3108
Email: info@sportwales.org.uk
Web: www.sportwales.org.uk

Transport Research Laboratory

Crowthorne House, Nine Mile Ride,
Wokingham, Berks RG40 3GA
Tel: 01344 773131
Email: enquiries@trl.co.uk
Web: www.trl.co.uk

UK Sport

21 Bloomsbury Street, London WC1B 3HF
Tel: 020 7211 5100
Email: info@uksport.gov.uk
Web: www.uksport.gov.uk

2022 PLANNER

January

Mon	31	3	10	17	24
Tue		4	11	18	25
Wed		5	12	19	26
Thu		6	13	20	27
Fri		7	14	21	28
Sat	1	8	15	22	29
Sun	2	9	16	23	30

February

Mon		7	14	21	28
Tue	1	8	15	22	
Wed	2	9	16	23	
Thu	3	10	17	24	
Fri	4	11	18	25	
Sat	5	12	19	26	
Sun	6	13	20	27	

March

Mon		7	14	21	28
Tue	1	8	15	22	29
Wed	2	9	16	23	30
Thu	3	10	17	24	31
Fri	4	11	18	25	
Sat	5	12	19	26	
Sun	6	13	20	27	

April

Mon		4	11	18	25
Tue		5	12	19	26
Wed		6	13	20	27
Thu		7	14	21	28
Fri	1	8	15	22	29
Sat	2	9	16	23	30
Sun	3	10	17	24	

May

Mon	30	2	9	16	23
Tue	31	3	10	17	24
Wed		4	11	18	25
Thu		5	12	19	26
Fri		6	13	20	27
Sat		7	14	21	28
Sun	1	8	15	22	29

June

Mon		6	13	20	27
Tue		7	14	21	28
Wed	1	8	15	22	29
Thu	2	9	16	23	30
Fri	3	10	17	24	
Sat	4	11	18	25	
Sun	5	12	19	26	

July

Mon		4	11	18	25
Tue		5	12	19	26
Wed		6	13	20	27
Thu		7	14	21	28
Fri	1	8	15	22	29
Sat	2	9	16	23	30
Sun	3	10	17	24	31

August

Mon	1	8	15	22	29
Tue	2	9	16	23	30
Wed	3	10	17	24	31
Thu	4	11	18	25	
Fri	5	12	19	26	
Sat	6	13	20	27	
Sun	7	14	21	28	

September

Mon		5	12	19	26
Tue		6	13	20	27
Wed		7	14	21	28
Thu	1	8	15	22	29
Fri	2	9	16	23	30
Sat	3	10	17	24	
Sun	4	11	18	25	

October

Mon	31	3	10	17	24
Tue		4	11	18	25
Wed		5	12	19	26
Thu		6	13	20	27
Fri		7	14	21	28
Sat	1	8	15	22	29
Sun	2	9	16	23	30

November

Mon		7	14	21	28
Tue	1	8	15	22	29
Wed	2	9	16	23	30
Thu	3	10	17	24	
Fri	4	11	18	25	
Sat	5	12	19	26	
Sun	6	13	20	27	

December

Mon		5	12	19	26
Tue		6	13	20	27
Wed		7	14	21	28
Thu	1	8	15	22	29
Fri	2	9	16	23	30
Sat	3	10	17	24	31
Sun	4	11	18	25	

2023 FORWARD PLANNER

January

Mon	30	2	9	16	23
Tue	31	3	10	17	24
Wed		4	11	18	25
Thu		5	12	19	26
Fri		6	13	20	27
Sat		7	14	21	28
Sun	1	8	15	22	29

February

Mon		6	13	20	27
Tue		7	14	21	28
Wed	1	8	15	22	
Thu	2	9	16	23	
Fri	3	10	17	24	
Sat	4	11	18	25	
Sun	5	12	19	26	

March

Mon		6	13	20	27
Tue		7	14	21	28
Wed	1	8	15	22	29
Thu	2	9	16	23	30
Fri	3	10	17	24	31
Sat	4	11	18	25	
Sun	5	12	19	26	

April

Mon		3	10	17	24
Tue		4	11	18	25
Wed		5	12	19	26
Thu		6	13	20	27
Fri		7	14	21	28
Sat	1	8	15	22	29
Sun	2	9	16	23	30

May

Mon	1	8	15	22	29
Tue	2	9	16	23	30
Wed	3	10	17	24	31
Thu	4	11	18	25	
Fri	5	12	19	26	
Sat	6	13	20	27	
Sun	7	14	21	28	

June

Mon		5	12	19	26
Tue		6	13	20	27
Wed		7	14	21	28
Thu	1	8	15	22	29
Fri	2	9	16	23	30
Sat	3	10	17	24	
Sun	4	11	18	25	

July

Mon	31	3	10	17	24
Tue		4	11	18	25
Wed		5	12	19	26
Thu		6	13	20	27
Fri		7	14	21	28
Sat	1	8	15	22	29
Sun	2	9	16	23	30

August

Mon		7	14	21	28
Tue	1	8	15	22	29
Wed	2	9	16	23	30
Thu	3	10	17	24	31
Fri	4	11	18	25	
Sat	5	12	19	26	
Sun	6	13	20	27	

September

Mon		4	11	18	25
Tue		5	12	19	26
Wed		6	13	20	27
Thu		7	14	21	28
Fri	1	8	15	22	29
Sat	2	9	16	23	30
Sun	3	10	17	24	

October

Mon	30	2	9	16	23
Tue	31	3	10	17	24
Wed		4	11	18	25
Thu		5	12	19	26
Fri		6	13	20	27
Sat		7	14	21	28
Sun	1	8	15	22	29

November

Mon		6	13	20	27
Tue		7	14	21	28
Wed	1	8	15	22	29
Thu	2	9	16	23	30
Fri	3	10	17	24	
Sat	4	11	18	25	
Sun	5	12	19	26	

December

Mon		4	11	18	25
Tue		5	12	19	26
Wed		6	13	20	27
Thu		7	14	21	28
Fri	1	8	15	22	29
Sat	2	9	16	23	30
Sun	3	10	17	24	31

ADVERTISERS INDEX

Page

Adrian Flux Motorsport 423
Anglo American Oil Co 65
Arai Helmets 179
BDN Automotive 359
Bicester Heritage 7
Bluefin Sport ..... cover iv
Caged Laser Engineering 167
Cartek Motorsport Electronics 153
Cirrus Research plc 151
Cooper Tires 216-217
Corbeau Motorsport Safety Systems 173
Custom Cages 169
FEV 177
GPR 185
Grove & Dean Motorsport Insurance 419
GSM Performance 181
ID Mouldings 151
Lifeline Fire & Safety Systems Ltd 175
Lista 149
Michelin 213
Myerscough College 195
Nankang Tyres 219
PD Exstinguishers 176
Racetech 186, 187

Page

Reis Motorsport Insurance .....4, 421, cover iii
Retro Reproductions 151
Ryan Motorsport Insurance ..... cover ii
Safety Devices International Ltd 171
Schroth Racing 183
SW Motorsports 193
Toyo Tyres 215
Tube Direct 195
VBox Motorsport 299
VP Racing Fuels 59

House adverts

BMS Training Trust 211, 306
How to advertise on Facebook 87
How to promote your event 15
How to write and send a press release 79
Lifetime Achievement Award 12, 284
More marketing tools to consider 244
Prince Michael Award of Merit..... 12, 284
Publications, Technical Papers and Club Equipment 28, 33, 189, 278, 362, 381
Officiel d'Honneur Appointments ... 14, 182, 393
Spectate Safely! 14, 145, 180, 228, 261, 300, 323

motorsport insurance specialists

On-Track Accident Damage Cover
Motorsport Commercial & Liability
Road Insurance for Rally, Race, Sports, High Performance & Modified Cars
Insurance for Event Organisers
Personal Accident & Travel
Storage & Transit Cover for Non Road Legal Vehicles

0115 965 1020
On-Track Accident Damage
Motorsport Vehicles, Competition and Sports Cars

0115 965 1050
Commercial Policies, Liability Cover and Personal Accident

reis motorsport insurance

www.reis.co.uk
contact@reis.co.uk

Reis Motorsport Insurance is a trading name of Insurance Factory Limited.
Insurance Factory Limited is authorised and regulated by the Financial Conduct Authority (No. 306164).
Registered Office: 45 Westerham Road, Sevenoaks, Kent TN13 2QB.

Marsh | Bluefin Sport

The need for speed

Motorsport is naturally a fast paced and dynamic environment.

Dealing with a specialist insurance adviser helps to ensure that your specific risks and exposures are covered.

As **the appointed broker to Motorsport UK** we can provide a range of products and services to suit your needs.

On track accident damage, motor trade, personal accident, property, storage and transit, contractual bonus, event liability and cancellation, to name a few.

bluefinsport.co.uk/motorsport

This is a marketing communication.

Bluefin Sport is a trading name of Marsh Ltd. Marsh Ltd is authorised and regulated by the Financial Conduct Authority for General Insurance Distribution and Credit Broking (Firm Reference No.307511). Registered in England and Wales Number: 1507274.
Registered Office: 1 Tower Place West, Tower Place, London EC3R 5BU.Copyright 2021. 21–123456789.

A business of Marsh McLennan