The Chronology of the Royal Palace of Qatna Revisited

A Reply to a Paper by Mirko Novák, *Egypt and the Levant* 14, 2004

Daniele Morandi Bonacossi[1]

Abstract

Qatna's Royal Palace has been jointly investigated by Syrian, Italian and German teams between 1999 and 2006. Its layout has been nearly fully explored and – considering the poor preservation state of the building – its functional organisation reconstructed as far as possible.

However, what remains uncertain is the chronology of the building, which is still a matter of debate, especially as far as its foundation is concerned. Several proposals for dating the construction of the Royal Palace – among which M. Novák's article in *Egypt and the Levant* 14, 2004 ("The Chronology of the Royal Palace of Qatna", 299–318) is the most recent and comprehensive – have been put forth, but none of these is based upon firm stratigraphic data and archaeological materials found *in situ*.

The broad stratigraphic and material evidence excavated in eight years of archaeological exploration by the Italian expedition is critically reviewed and compared with the evidence presented by Novák with the goal of achieving a more precise and reliable chronology for the foundation of Qatna's Royal Palace.

1. The urban development of Mishrifeh from the mid-third to the mid-second millennium BC: a preliminary attempt at reconstruction

After the first urbanization of the site of Mishrifeh during the EBA IV, when a town – possibly roughly circular in plan and with an extension of about 25 ha – had developed from a previous EBA III settlement,[2] its urban layout was dramatically modified, during the transition from the third to the second millennium BC, and a vigorous process of urban growth initiated in the city, now called Qatna.

If a recently proposed identification is correct, the first mention of Qatna in the written sources falls exactly in this period, at the beginning of the MBA. In the so-called 'Sinuhe-tale', dating to the reign of Pharaoh Sesostris I at the beginning of the XII Dynasty, the city of Qatna may have been mentioned as an urban centre and a kingdom of already elevated political importance, ruled by a king bearing the Old Syrian title of *mekim/mekum*.[3]

Possibly at some point during this period, the site was fortified with the construction of a monumental earthen rampart with a preserved height of 18 m and a width at its base of 60 to 80/90 m, provided with four main city gates, which enclosed a large square city of 110 ha (Fig. 1).[4]

It is widely acknowledged that these imposing earthen embankments, which are typical of the archaeological landscape of the Levant during the second millennium BC, were, besides their obvious defensive function, also imbued with a symbolic and propagandistic significance, which expressed an ideological claim to power within the context of a wider regional socio-political milieu characterised by peer-polity interaction.[5]

---

[1] University of Udine

[2] Al-Maqdissi 2003a, 1513–1514; Morandi Bonacossi 2007.

[3] Schneider 2002. On this title, which, if the interpretation set forth by Schneider of this controversial passage of the 'Sinuhe-tale' is correct, was not distinctive only of the king of Ebla, but was used also at least by the king of Qatna, see also Bonechi 1997; Tonietti 1997; Kühne 1998.

[4] The construction of Qatna's ramparts cannot yet be precisely dated on firm archaeological grounds due to the fact that specific investigations regarding the city's fortification system could not be carried out until now. The only available C^{14} determination concerns the western rampart and might refer to maintenance work on the fortifications, which apparently took place during the interval between the late MBA II and the early LBA I. However, on the basis of comparisons with Tell Mardikh, where the ramparts were built during the early MBA I (Matthiae 1997, 3–4), a similar date is at present hypothesized for the construction of Qatna's ramparts, even though it must be admitted that the dating of an architectural feature only by means of typological comparisons is not entirely compelling. For this reason, the possibility that Qatna's rampart system was constructed during the late MBA II or the MB–LB transition, as might be suggested by the above-mentioned radiocarbon date, cannot be ruled out. In this regard,

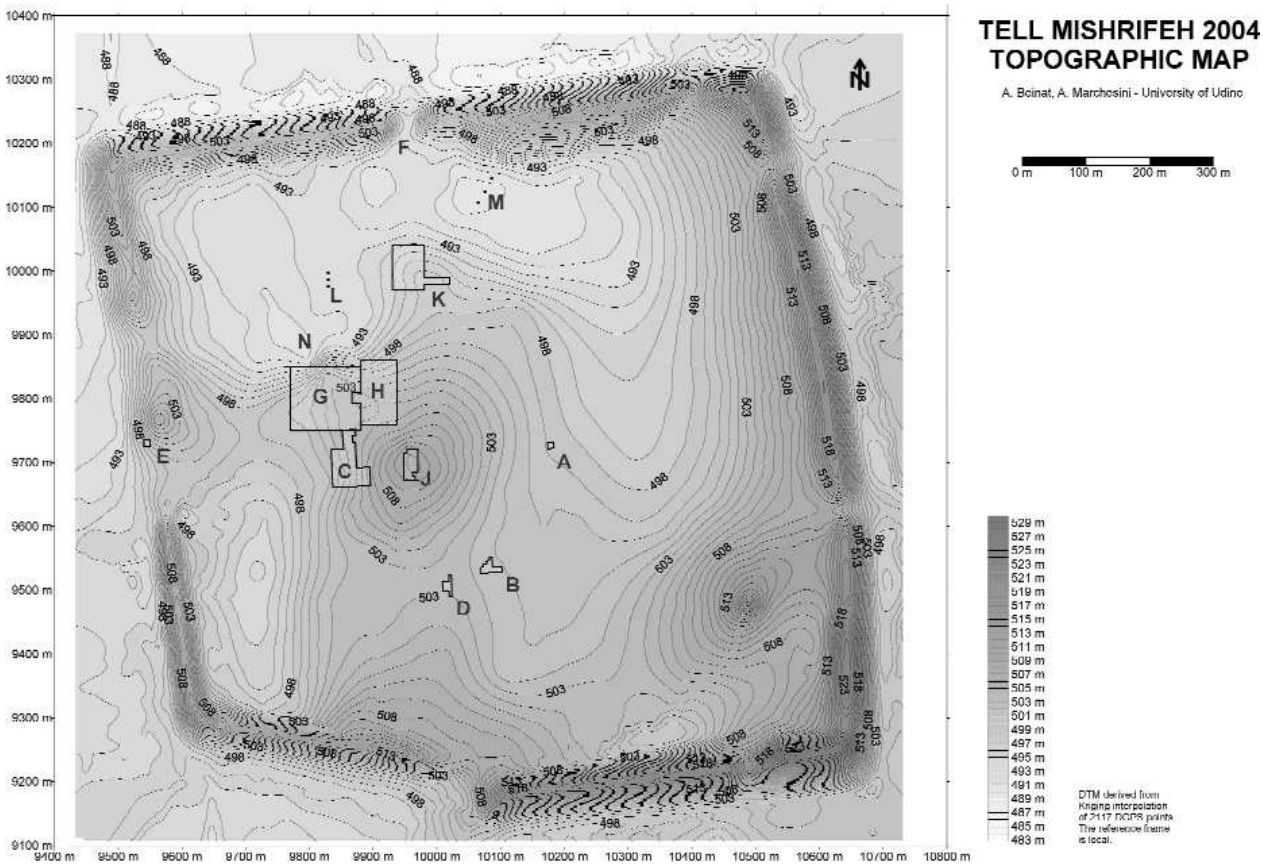

Fig. 1 Topographic map of Mishrifeh

In the case of Qatna, this is also emphasized by the fact that the construction of this massive fortification system drastically changed the city's natural landscape, since the western and northern ramparts were built inside the area occupied by a lake (probably created artificially during the EBA IV and fed by karst springs), which was thus divided in two parts: a smaller portion was trapped inside the perimeter of the town, whilst the largest part of the lake constituted a sort of reservoir upstream of the city.[6]

At the very beginning of the second millennium BC, a major change can be also observed in the organisation and function of Qatna's acropolis. The large EBA IV granaries, silos, storage pits and the facilities for crop processing and transformation which were concentrated on the summit of the acropolis were abandoned.[7] The vast EBA IV residential quarter located in the northern part of the acropolis plateau was also deserted and the area immediately to the south of it went out of use as an elite burial site, as during the EBA IVA, when a multiple shaft burial – Tomb IV – had been inserted in this part of the site.[8]

it should be noted that du Mesnil du Buisson did not adopt a definite position regarding the precise chronology of the ramparts, but – even though on the basis of rather vague reflections – assigned the eighteenth century BC as *terminus post quem* for their construction (1935, 40–46). Gregori, in her seminal survey of the "three-entrance" city-gates of the Middle Bronze Age in Syria and Palestine, suggests a late date within the MBA for Qatna's western gate (1986, 92 and note 65), whilst an even later date to the late fifteenth-fourteenth century BC is indicated by Hult (1994, 193–195). Finally, recent field research has tentatively assigned the construction of the ramparts of Tell es-Sefinet Nebi Noah, located 3 km north-east of Tell Nebi Mend, to the LBA (and not to the MBA) on the basis of the collected surface material (Philip 2007).

5 Cf. Bunimovitz 1992; Finkelstein 1992; Ilan 1998.

6 Cremaschi, Morandi Bonacossi and Valsecchi in press; Cremaschi 2007; Al-Maqdissi and Morandi Bonacossi 2005, 13–15.

7 Morandi Bonacossi 2007.

8 Du Mesnil du Buisson 1935, 144–164.

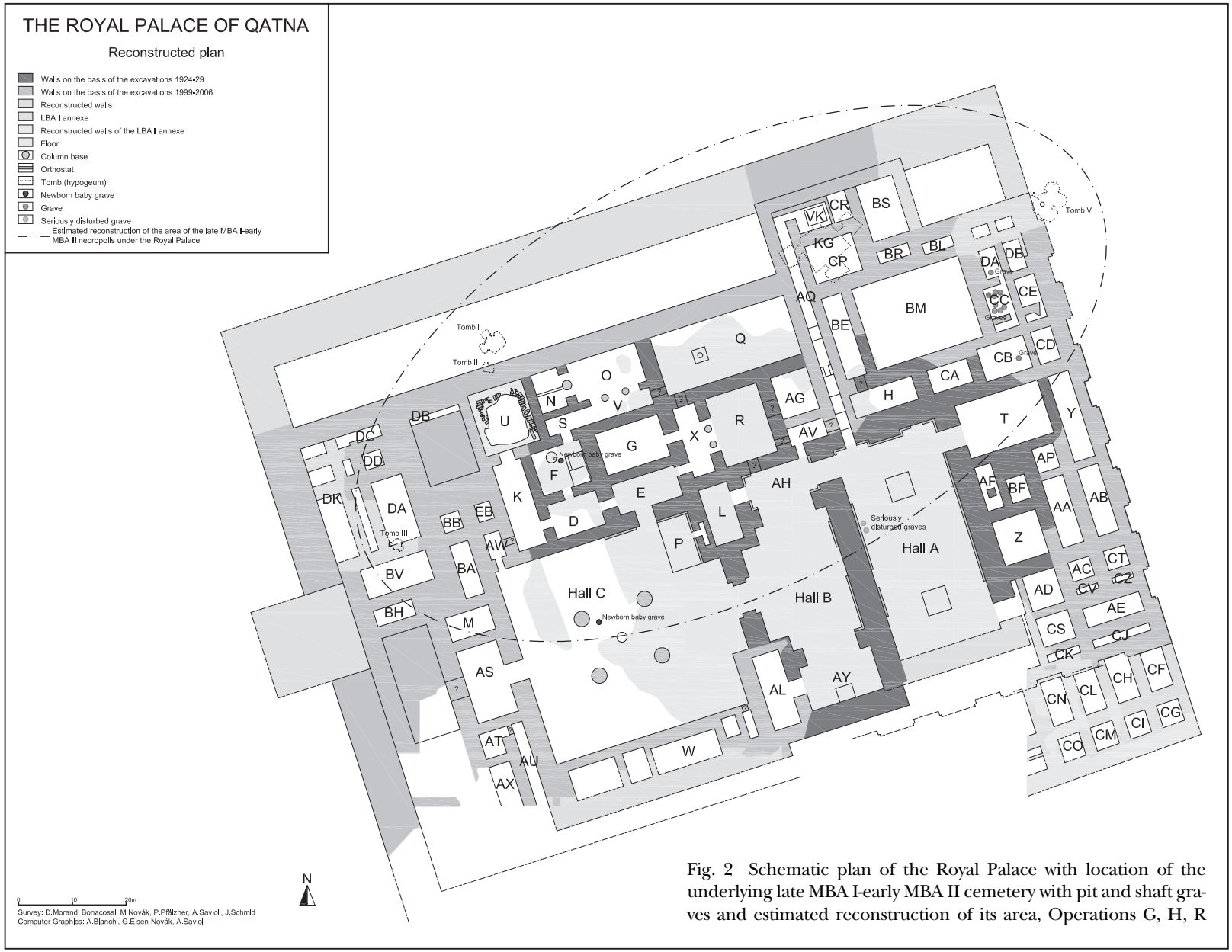

Fig. 2 Schematic plan of the Royal Palace with location of the underlying late MBA I-early MBA II cemetery with pit and shaft graves and estimated reconstruction of its area, Operations G, H, R

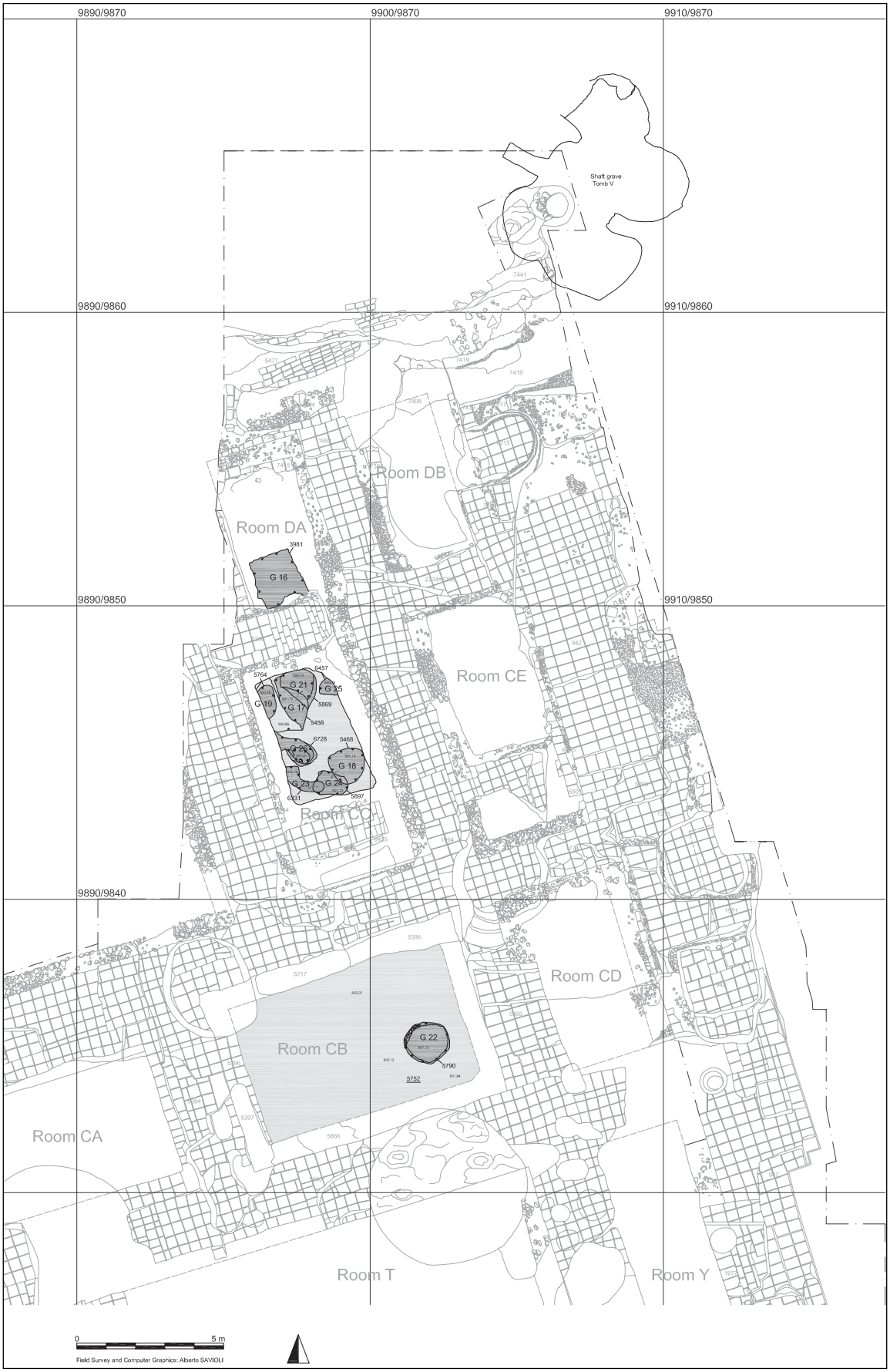

Fig. 3 Palympsestic plan of the northeastern part of the late MBA I–early MBA II cemetery underlying the Royal Palace with pit graves and shaft grave Tomb V, Operation H

On the top of the central acropolis mound, a monumental building of unknown function was erected and, immediately to the E, a large and well-organised pottery workshop was established. This ceramic production area was probably controlled by the institution residing in the large public building next to it.[9]

During this second major phase of urbanization of the site, about which we still have little information, a large funerary area appeared in Operations G and H above the previous EBA residential quarter (Figs. 2–3).[10] This extensive burial ground was later largely destroyed by the foundation system of the Royal Palace. A number of skulls and some limb bones together with complete (though not *in situ*) ceramic vessels of this period were found in the fills of several foundation trenches of the later Royal Palace.[11]

To date, 15 simple pit graves of adults and newborns buried in jars or pits with few funerary goods – usually a very small number of pottery vessels (Fig. 4) and in some cases few bronze objects, e.g. pins and personal ornaments such as beads and a belt element decorated with sea shells (Fig. 5) –, have been discovered.[12]

The grave goods recovered and three AMS radiocarbon determinations obtained from human bones from Graves 17, 21 and 26 (Table 1)[13] allow us to date the use of the cemetery from the very beginning of the MBA I to the MBA IIA.

Along the escarpment overlooking the northern lower city, three contemporary rock-cut shaft graves (Tombs I –III) had already been spotted by du Mesnil du Buisson (Fig. 2)[14] and a fourth large – though unfortunately robbed – one was identified by the Italian team during the 2006 excava-

Sample	CEDAD code	^{14}C Determination	Calibrated determination (68.2 %)	Calibrated determination (95.4 %)
MSH03 H G 21	LTL2047A	3455 ± 50 BP	1785 ± 95 cal BC	1765 ± 135 cal BC
MSH03 H G 17	LTL2048A	3479 ± 45 BP	1810 ± 70 cal BC	1800 ± 120 cal BC
MSH03 H G 26	LTL2049A	3676 ± 35 BP	2060 ± 80 cal BC	2075 ± 125 cal BC

Table 1 AMS radiocarbon determinations of Graves 17, 21 and 26

9 Morandi Bonacossi in press a and b.

10 See also Morandi Bonacossi in press b.

11 The graves excavated by the Italian and German teams have been uncovered underneath Room CC of the Royal Palace (Figs. 2–3), where Graves 19 and 26 on the one hand and 25 on the other were later cut and disturbed by the foundation trenches of the room's western and eastern walls and their draining shafts respectively, in the area of Rooms DA, CB, B, O, N and F, Hall C and in the region of Throne Room A, the western foundation wall of which cut and destroyed at least two adult burials. For the tombs excavated in Operation G by the German Mission (under Rooms B, N and O), cf. Novák-Pfälzner 2002, 212–213. For the newborns and children jar burials discovered by the French excavators under Hall C and Room F and erroneously interpreted as remains of human sacrifices buried as foundation deposits during the construction of the Royal Palace, cf. du Mesnil du Buisson 1928a, 8; Id. 1930, 149–152, figs. 1–2, pl. XXX:2; Id. 1935, 73 and pl. XVI (where jar burials have been indicated as *dépôts de fondation* and marked with an L). According to the pottery drawings and descriptions published by du Mesnil, however, at least one of these burials can be dated to the EBA IV (du Mesnil du Buisson 1930, 150–151, figs. 1–2, pls. XXX:2 and XXXII:3, second column from left) and tentatively interpreted as a jar grave interred under the floor of a house belonging to the third millennium residential quarter located in this area. Similar newborn baby or child burials have been recently discovered also by the Syrian team under the floors of EBA IV houses excavated under the southern part of the palace throne room (Operation R, prof. Al-Maqdissi, personal communication).

12 To these tombs the few jar burials excavated by du Mesnil du Buisson have to be added. Their exact number remains uncertain (only two can be traced with certainty in the Count's publications; see du Mesnil du Buisson 1930, 151–152).

13 The datings were performed at the AMS Radiocarbon Dating and Ion Beam Analysis Facility of the University of Lecce.

14 Du Mesnil du Buisson 1927, 13–22; du Mesnil du Buisson 1928b, 81–82; Dussaud 1928, 132–138.

Fig. 4 Vessels from grave G 16, male adult individual, Operation H (photo R. Ercolino)

Fig. 5 Grave G 26, female mature adult individual buried with a bronze/copper ornamental belt element decorated with sea shells placed next to the ankle, Operation H (photo M. Merlino). The western part of the grave (top) has been cut by the foundation trench of Room CC's western wall

tion campaign (shaft grave Tomb V; Figs. 2–3). The burial typology with central chamber and two or more lateral chambers and the variety of funerary gifts recovered, mainly pottery vessels and bronze weapons, show that we are dealing with graves belonging to the Qatnite elite.

This evidence indicates that in the northern part of the acropolis, before the construction of the Royal Palace there was a large cemetery containing graves of members of the urban elite of Qatna, as well as individuals of lower social rank. As the AMS radiocarbon determinations indicate, this MB I–early MB II burial ground, which was later covered by the central and northern parts of the palace, seems to have been used for a long time and intensively, as is shown by the fact that – at least in some parts of the necropolis, such as in the case of the graves uncovered underneath Room CC of the palace – the burials were layered in several successive levels.

During the late MBA II, the pottery factory on the summit of the acropolis was enlarged to the west and the monumental public building erected at the very beginning of the second millennium lost its function due to the construction of new pottery kilns, which were dug into its walls. As far as we can say at present, the building was extensively demolished, possibly in order to rob

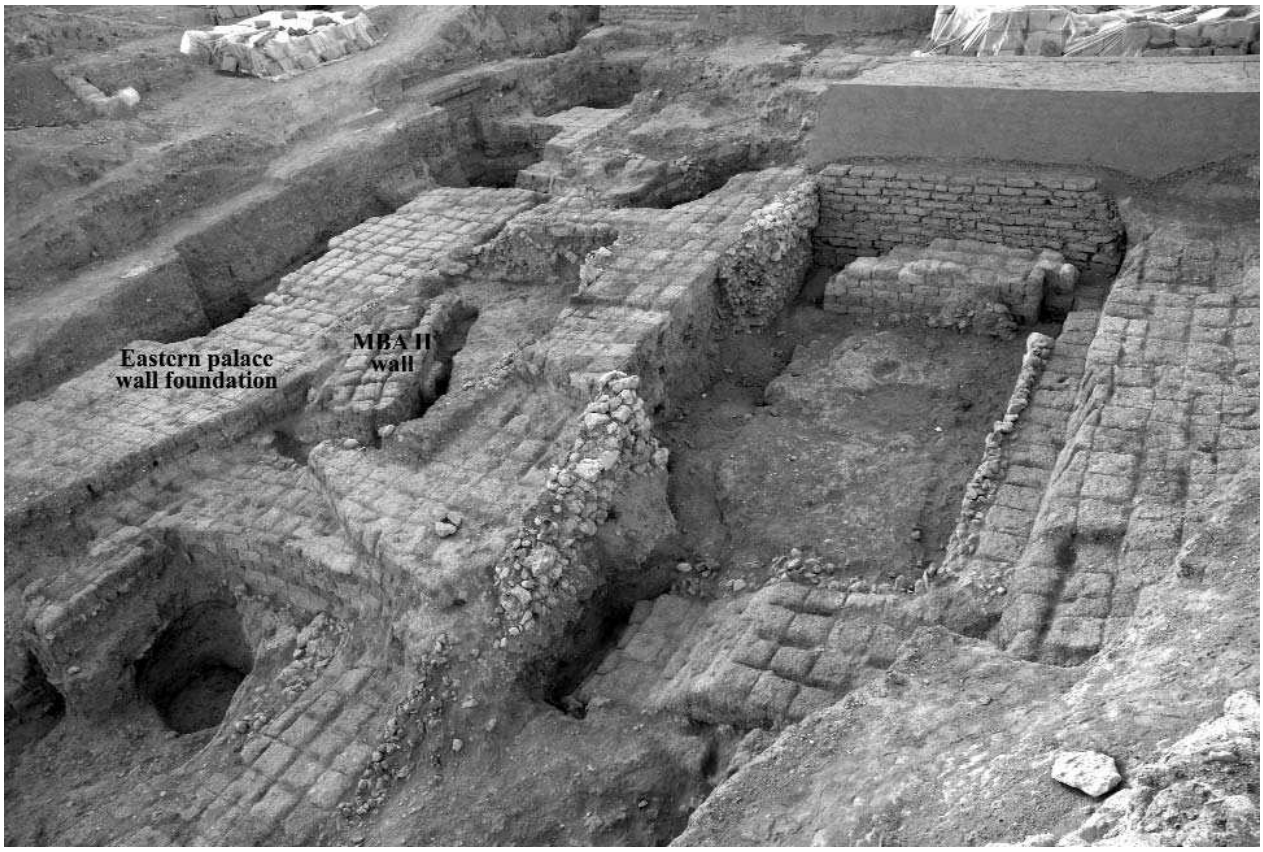

Fig. 6 One of the MBA II walls of Operation H cut by the foundations of the Royal Palace (photo M.A. Giovinazzo)

its mud-bricks and reuse them somewhere else, as is shown by the presence of a large and imposing cut in the northern wall of the building that reaches down to its foundation. This massive wall, which was nearly 4 m thick and had foundations more than 6 m deep, was completely dismantled.

Probably at the same time or slightly later, on top of the abandoned cemetery, the Royal Palace discovered by du Mesnil du Buisson was built.[15] Its mud-bricks are identical with respect to size, colour and composition to the surviving mud-bricks of the robbed monumental building on the summit of the acropolis, so it is possible that when the building went out of use due to the enlargement of the pottery factory, it was demolished and used as a mud-brick quarry for the construction of the new Royal Palace.

Besides the graves of the necropolis, the palace foundation system also cut a series of walls with a different orientation, parts of which survived in the northern part of Operation H and the north-eastern part of Operation G (Fig. 6). These walls, possibly belonging to one and the same building, were dated to the MBA II on the basis of the associated pottery and thus chronologically follow the MBA I–early MBA II cemetery.[16]

During the MB/LB transition, roughly in the same period in which the Royal Palace was erected, the 'Lower City Palace' of Operation K (Figs. 1 and 7),[17] the monumental residence of Operation C (Fig. 8),[18] and a large public building identified during the 2006 excavation campaign immediately to the east of the Operation T Royal Palace were also built.

[15] For a detailed discussion of this issue, see below.

[16] Immediately to the south of the Royal Palace a large silo pertaining to the same occupation horizon was excavated. The silo was later covered by a street running along the southern palace façade and afterwards by the southern annexe to the Royal Palace (see below).

[17] Luciani 2003, 146–157.

[18] Al-Maqdissi 2003a, 1500–1505; Al-Maqdissi 2003b, 235–239; Al-Maqdissi and Morandi Bonacossi 2005, 20–21.

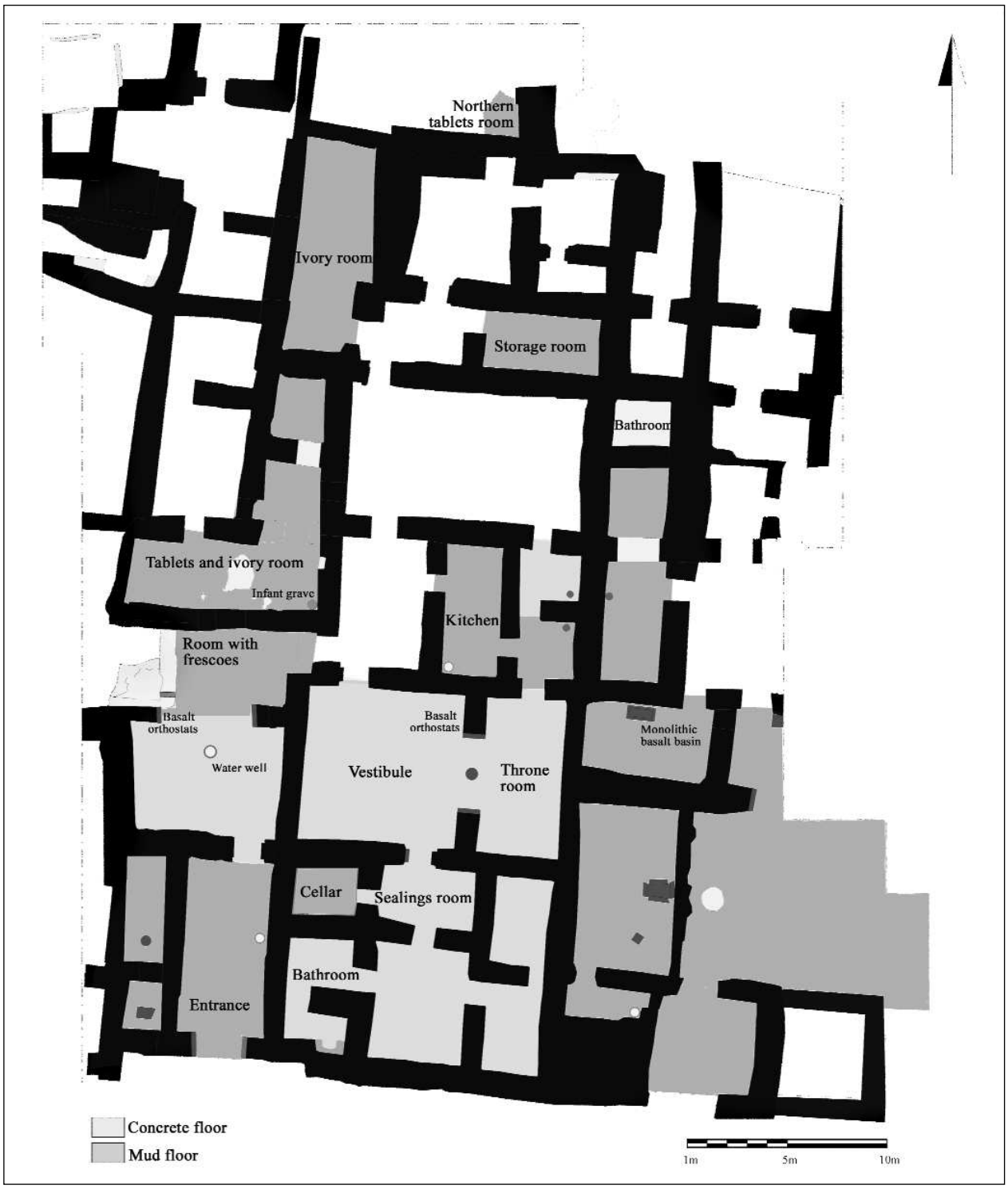

Fig. 7 Schematic plan of the 'Lower City Palace', Operation K (drawing A. Savioli)

These radical modifications of the urban and functional layout of the Qatna acropolis – with the emergence, as in Ugarit, of a hub of official buildings of palatial character sited on the acropolis – indicate that during the MB/LB transition the city's central core shifted from the acropolis summit, where the MBA I and II public building and its pottery manufactory were located, to an area to the north and west of these, which was previously peripheral in character and occupied only by a large cemetery.

The "nuclear" model of Mesopotamian tradition based on a single large palace in which the residential and political functions and those of control

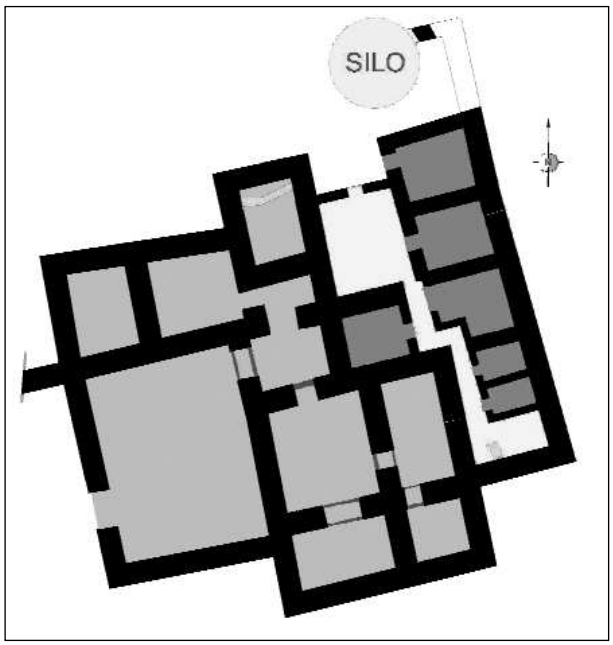

Fig. 8 Schematic plan of the monumental Residence, Operation C (from from Al-Maqdissi & Morandi Bonacossi 2005, fig. p. 20)

and economic interface of the redistributive system were concentrated, is here replaced by a decentralised pattern, in which the different functions of power were distributed in several official buildings located in the vast acropolis region around the Royal Palace, which, however, remained the focus of the royal dynasty's authority.

2. The Royal Palace of Qatna and the problem of the dating of its foundation

The seven campaigns carried out by the joint Syrian-Italian-German project have greatly increased our understanding of the general layout of the monumental royal palace (Fig. 2), which covered an area of about 1.5 ha and was composed of the following parts:

– a vast and imposing ceremonial sector, characterised by a reception suite with a plan reminiscent of Old Babylonian palace architectural schemes, consisting of the originally roofed square Audience Hall C,[19] which covered the remarkable area of 1300 m^2, and two reception halls: a smaller room (Hall B) and the larger Hall A, measuring 41 × 20 m, which was probably the actual throne room of the palace.[20]
– Two service wings, one to the north of the ceremonial sector and the other to the east of it. The eastern wing was distinguished by a triple row of rooms numbering at least 35 in total, many of which must have been large storage rooms as suggested by their elongated rectangular plan.
– A possible upper storey in the northeastern part of the palace, where the royal living quarters may have been located. The existence of an upper storey may be inferred from the massive thickness of the foundation walls in this region of the architectural complex and the presence of what seems to have been a stairwell next to the north-eastern corner of the throne room (Room AF). This stairwell with a central mud-brick core, which probably supported flights of stairs, would have allowed the king direct access from the quarters located on the first storey of the palace to the throne room. The location of the staircase also allows us to hypothesize that the royal throne may have been situated against the throne room's northern wall, where a large buttress projects from the wall face.
– A karst well in the north-western part of the complex, which was located ca. 20 m below the level of the floors and guaranteed the palace water supply.[21] The well, which is currently under investigation by the German Mission, was reached by means of monumental flights of basalt stairs;
– The royal hypogeum, which may have been directly linked by an underground passageway to the throne room.[22]
– Finally, in a later stage, during the LBA I, important renovation work was carried out in the Royal Palace, with the modification of the building's plan through the addition of an annexe beyond the southern palace wall. This

[19] The possibility cannot be excluded, however, that Hall C was a porticoed courtyard rather than an entirely roofed colonnaded hall.

[20] Novák and Pfälzner 2003; Barro 2002, 112, 116–117; Barro 2003, 83–85; Miglus 2004, 257; see also, more recently, Marchetti 2006, 282–283.

[21] Novák and Pfälzner 2003, 138.

[22] Al-Maqdissi, Dohmann-Pfälzner, Pfälzner, Suleiman 2003; Novák and Pfälzner 2003, 139–140.

annexe, which consisted of at least ten new rooms, abutted the original southern façade of the Royal Palace, thereby cutting a sequence of four outdoor surfaces, most probably streets, which had been laid against the southern façade of the building (Fig. 9).

Although the overall layout of the palace, the function of the different sectors of the palace and its destruction date around the mid-fourteenth century BC are by now clear,[23] the foundation date of this impressive architectural complex is still a matter of debate. During recent campaigns the Italian Mission has focused its investigations in the palace area on the chronology issue, carrying out to this end an ample programme of localised excavations in the southern annexe and several foundation trenches of the Royal Palace walls.

The first excavator, Count du Mesnil du Buisson, suggested that the Royal Palace was constructed during the late third/early second millennium BC,[24] whilst recently a date during the MB I/MB II transition – that is during the Mari period – has been proposed by Dardaillon,[25] Novák and Pfälzner,[26] and in particular by Novák in a comprehensive article that appeared in the 2004 issue of *Egypt and the Levant*.[27] Marchetti, in a recent comparative study of the Middle Bronze Age public architecture of Tilmen Höyük, favours a MBA II date for the construction of Qatna's Royal Palace, whilst avoiding an extensive discussion of the chronology problem.[28]

Novák's arguments for an earlier date for the construction of the palace during the Mari period are essentially three and rely upon architectural, ceramic and glyptic considerations.

1. The architectural evidence.[29] As stated above, the central ceremonial wing – consisting of a large roofed hall or courtyard with a portico together with a reception suite and the actual throne room – shows striking similarities with Courtyard 106 and Rooms 64 and 65 of the Mari palace and other Old Babylonian residential buildings.[30]
2. The ceramic evidence.[31] MBA I pottery and MBA I/MBA II transitional ceramic diagnostics were found in the fills of the palace foundation trenches.
3. The glyptic evidence.[32] Clay sealings with impressions of Classical Old Syrian seals were recovered from palace foundation trench fills and the debris of collapsed rooms.

According to Novák, an analysis of the typological characteristics of the palace plan together with the ceramic and glyptic materials found make it possible to date the construction of the building to the MBA I/MBA II transition.

However, the evaluation of these and other lines of evidence from a stratigraphic perspective within the framework of our excavation project, which was designed to clarify the chronology of this monumental complex, leads to a different conclusion. To begin with, let us see what the stratigraphy of Operations G and H – which is summarised in Table 2 – actually tells.

Archaeological features in Operations G and H	Stratigraphy	Relative Chronology
Domestic settlement levels	Phase 16	EBA IV A–B
Necropolis	Phase 15	MBA I–MBA IIA
Various architectural structures (silo, building)	Phase 14	MBA IIB
Royal Palace	Phase 13	Late MBA II or MB–LB transition

Table 2 Summary of the Operations G and H stratigraphic sequence for the mid-third–mid-second millennium BC

[23] On the destruction of the palace, see Novák and Pfälzner 2003, 134–135; Novák 2004, 313–315.
[24] Du Mesnil du Buisson 1935, 39.
[25] Dardaillon 2000, 70.
[26] Novák and Pfälzner 2002, 244 and 2003, 133–134.
[27] Novák 2004, 311.
[28] Marchetti 2006, 282.
[29] Novák 2004, 301–306.
[30] Such as, for example, the Larsa palace and the Ibal-pi-El palace at Tell Asmar.
[31] Novák 2004, 306–309.
[32] Novák 2004, 310–311.

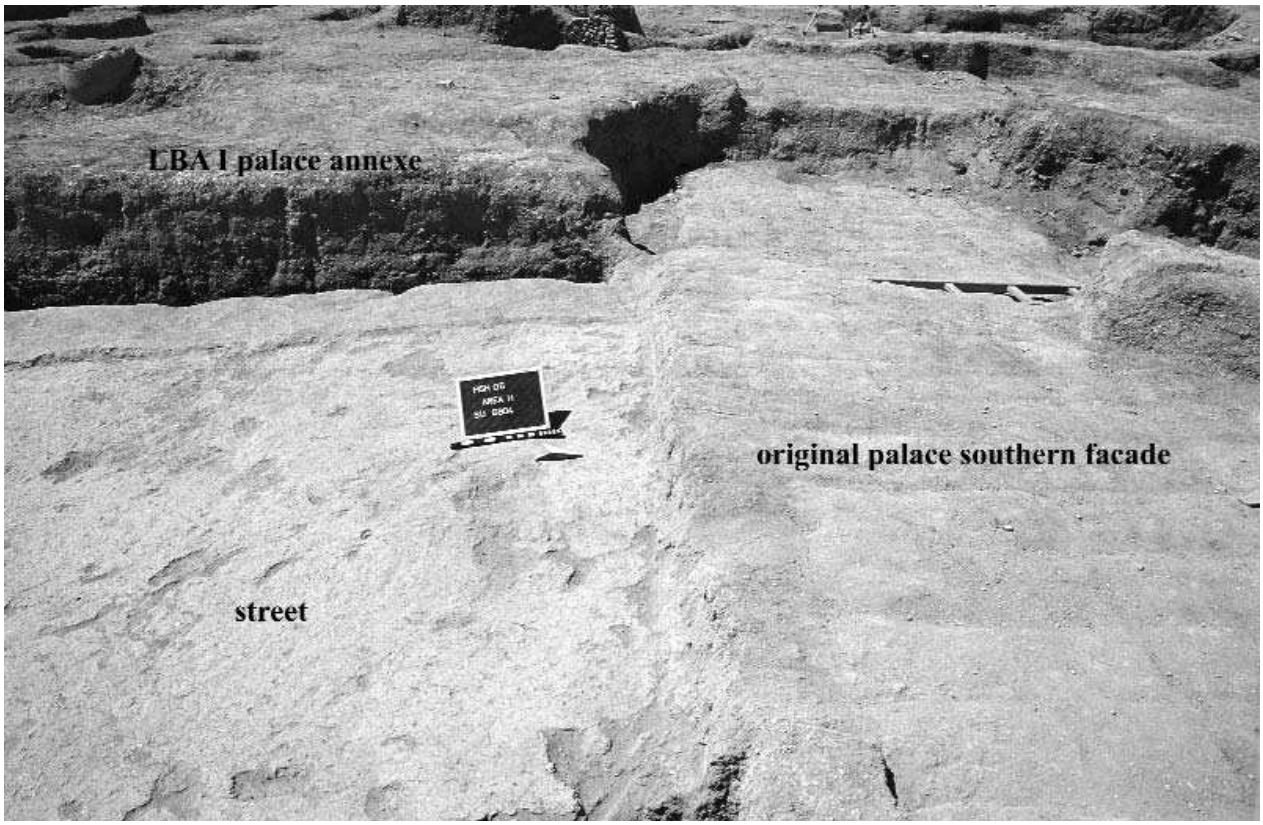

Fig. 9 Detail of one of the sequence of streets abutting the original southern façade of the Royal Palace and cut by the later (LBA I) palace annexe, Operation H (photo G. Garna)

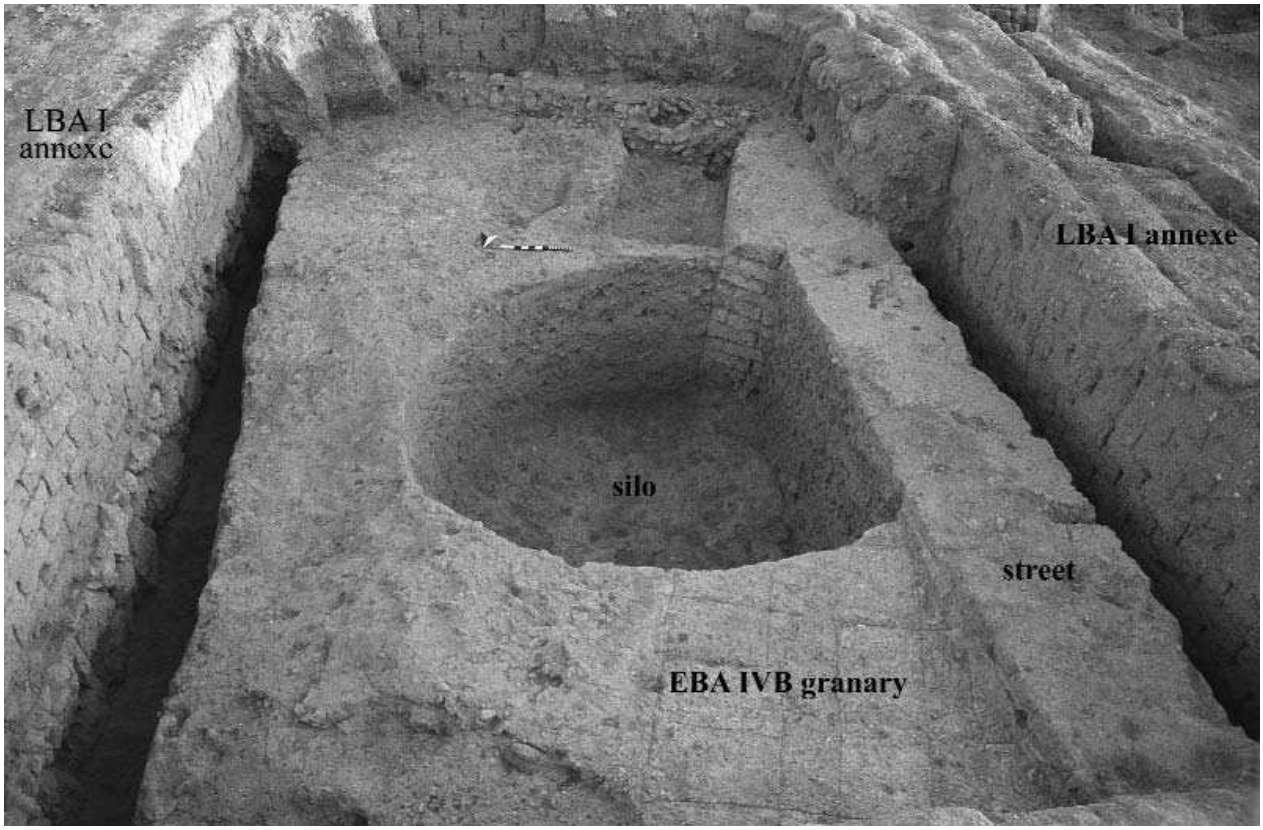

Fig. 10 The MB/LB transitional silo sealed by a street abutting the palace S façade. The silo cuts an underlying EBA IVB mud-brick granary. Operation H (photo G. Garna)

Firstly, the MBA I–MBA IIA cemetery described above provides us with an extremely important *terminus post quem* for the construction of the Royal Palace, which covered and to a large extent destroyed it. The palace can only have been built after the abandonment of this burial area, and probably not before a certain span of time had elapsed, since one can hardly imagine that a palace would have been built directly above a funerary area immediately after its abandonment, when its presence would still have been alive in the population's social and religious awareness. In this perspective it may be useful to call to mind that the latest grave of the cemetery was radiocarbon dated to 1765 ± 135 cal BC (95.4 % or 1785 ± 95 cal BC, 68.2 %).

Furthermore, as stated above, the Royal Palace also cut the walls of a substantial MBA II building of unknown layout and function (Fig. 6), which was located in the northern parts of Operations G and H. Unfortunately no direct stratigraphic relationship between the tombs of the necropolis and this building's walls could be detected. However, the pottery assemblage found in the foundation trenches of these walls and on a fragmentary floor related to the building made it possible to date its construction to the MBA II, after the abandonment of the cemetery. Moreover, the fact that the Royal Palace foundations cut and partially destroyed the walls of this building proves that it predated the palace, which subsequently covered it.

Secondly, the diagnostic sherds found on the surface of four successive streets running along the original southern palace façade, which abutted it and were later cut by the southern palace annexe together with the pottery recovered from the deposits covering the street surfaces, can be dated to the late MBA II and the LBA I. These streets sealed a circular silo containing late MBA II and some MB/LB transitional pottery diagnostics. The silo was dug in an EBA IVB building, probably a granary (Fig. 10).

At least in this part of the northern acropolis plateau, therefore, a break in the stratigraphic sequence can be observed between the EBA IVB and the late MBA II. This seems to fit very well with the presence immediately to the north of this area of the large MBA I–early MBA II necropolis already mentioned.

Thus, the only chronological window left open by the stratigraphic evidence for the construction of the Royal Palace (which overlay and to a significant extent destroyed these earlier features) is situated between the late MBA II and the MBA/LBA transition. From a strictly archaeological perspective, no possibility exists to move up the foundation phase of the palace complex back to the MBA I/MBA II transition or, as the AMS radiocarbon determinations of the last two graves of the cemetery indicate, to the early MBA II.

But let us now review more thoroughly the three main arguments put forward by Novák in his article to support the earlier date during the MBA I/MBA II transition, during the Mari period, for the construction of the palace.

1. The typological similarities linking the ceremonial wing of the Qatna palace with those of the Mari palace and other official buildings of the Old Babylonian period are striking indeed. However, the same architectural scheme, with a courtyard or hall and two reception rooms continued, to be used in Northern Mesopotamia and Syria during the following LBA, as is clearly shown by the Nuzi palace[33] and the palace of Adad-nirari I in Assur,[34] dating to the 15th–14th centuries and to the 13th century BC respectively, not to mention the later destination of this architectural formula in the Niqmepa palace of Alalakh IV[35] and the small Area A *hilani*-palace of Emar,[36] which already anticipate the classic Neo Syrian *hilani*.

The typological principle seems therefore not to be relevant to the dating of the construction of the Royal Palace, at least not as a fine chronological marker.

2. As stressed by Novák, EBA IV, MBA I and II ceramic diagnostics are present in the fills of the palace foundation trenches. However, in the fills of 9 undisturbed foundation trenches of the eastern part of the Royal Palace (from 17 such excavated by the Italian Mission), besides EBA and MBA I and II types, late MBA II sherds and MBA II–LBA I transitional shapes were found as

[33] Starr 1937, pl. 13.

[34] Preusser 1955, pl. 4.

[35] Woolley 1955.

[36] Margueron 1979.

[37] I am indebted to M. Da Ros and M. Iamoni who kindly discussed with me the ceramic material recovered from the palace foundations and provided typological comparisons.

[38] Dornemann 1992, fig. 3:6 (BI.48.113).

[39] See Bourke 1993; Iamoni 2007.

well (Fig. 11). Many of the transitional MB–LB pottery types remained in use also during the following LBA I (Fig.12).

Among the MBA II types, some diagnostics are typical of the late MBA II.[37] For example, the large and shallow bowl with hammer-like rim and high carination finds good parallels at MBA II B Hadidi (Fig. 11:1).[38]

Several types can be attributed to a late MBA II–LBA I transitional horizon, which, thanks to recent studies, can now be considered relatively well defined.[39] To this group belong the bowls with inturned rim folded downwards and slightly concave walls (Fig. 11:2), which are paralleled by examples from Qitar,[40] and the bowls with straight walls (Fig. 11:3) attested also at late MBA II–LBA I Hadidi.[41] The jars with upright out-turned rounded (Fig. 11:4) or squared rim with incised lines above the shoulder (Fig. 11:5) correspond to Type B(i) of Nebi Mend, which is widely attested in Trench I, Area 200,[42] whilst the jars with down-turned square rim (Fig. 11:6) parallel the Nebi Mend Type D jars and specimens from Qitar and Umm al-Marra.[43]

From the fills of the palace foundation trenches also diagnostics which are distinctive of the late MBA II–LBA I transitional horizon and the LBA I period as well were recovered. Small bowls with inturned simple rim and concave walls (Fig. 12:1) and shallow bowls with upright pointed rim (Fig. 12:2–3) are very frequent also in the LBA I levels of Hadidi[44] and Qitar, Munbaqah, Emar, Hadidi ('Tablet Building'), Alalakh IV, and Beirut (Glacis I) respectively.[45]

Documented are also bowls with straight walls and rounded rim (Fig. 12:4),[46] shallow or deep carinated bowls with beaded rim (Figs. 12:5–6),[47] large bowls with hammer-like rim (Fig. 12:7),[48] and deep bowls with straight walls decorated with incised lines under the beaded rim (Fig. 12:8).[49]

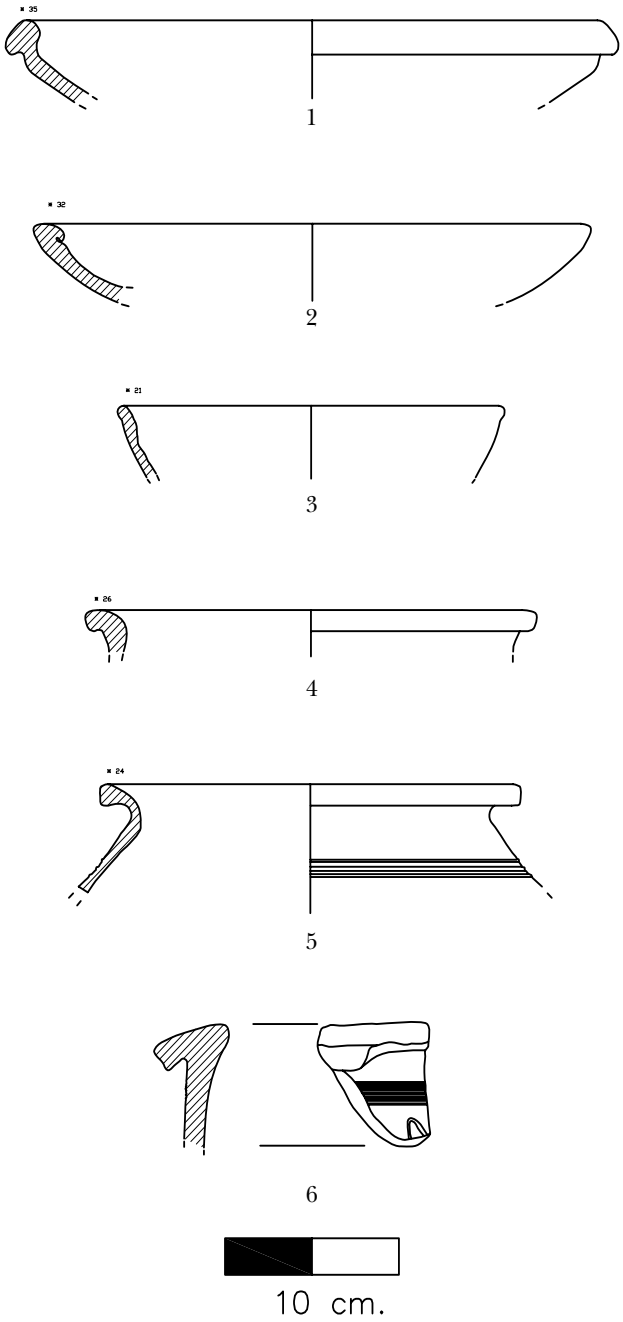

Fig. 11 Late MBA II and MBA II–LBA I transitional ceramic diagnostics from the foundation trenches of the Royal Palace

[40] McClellan 1986, 95, fig. 7:9.

[41] Dornemann 1981, 43, fig. 13:6.

[42] Bourke 1993, 168, fig. 10:5.

[43] Bourke 1993, 173, fig. 16:6–7; Culican and McClellan 1984, fig. 7:a; Tefnin 1983, 151, fig. 4:17.

[44] Dornemann 1981, 43, fig. 13:24.

[45] McClellan 1984–1985, 47, fig. 5:13; Feyter 1989, pl. 6:8, 11; Finkbeiner *et alii* 2001, fig. 9:f; Dornemann 1981, fig. 10:5; Woolley 1955, pl. 109:3a; Badre 1997, fig. 23:11. The bowls with pointed rim remained in use until the end of the LBA II, as is indicated by finds made at Afis (Area E1, level 9c; Venturi 1998, fig. 5:8).

[46] Parallels are known from Hadidi; see Dornemann 1981, 43, fig. 13:23.

[47] Comparable bowls were found at Hadidi; see Dornemann 1981, 43, fig. 13:29.

[48] This type is attested also at Qitar; see McClellan 1984–1985, 50, 53, fig. 6:4.

[49] A similar specimen was found at Hama G (Carré I 10); see Fugmann 1958, fig. 143 (O 487).

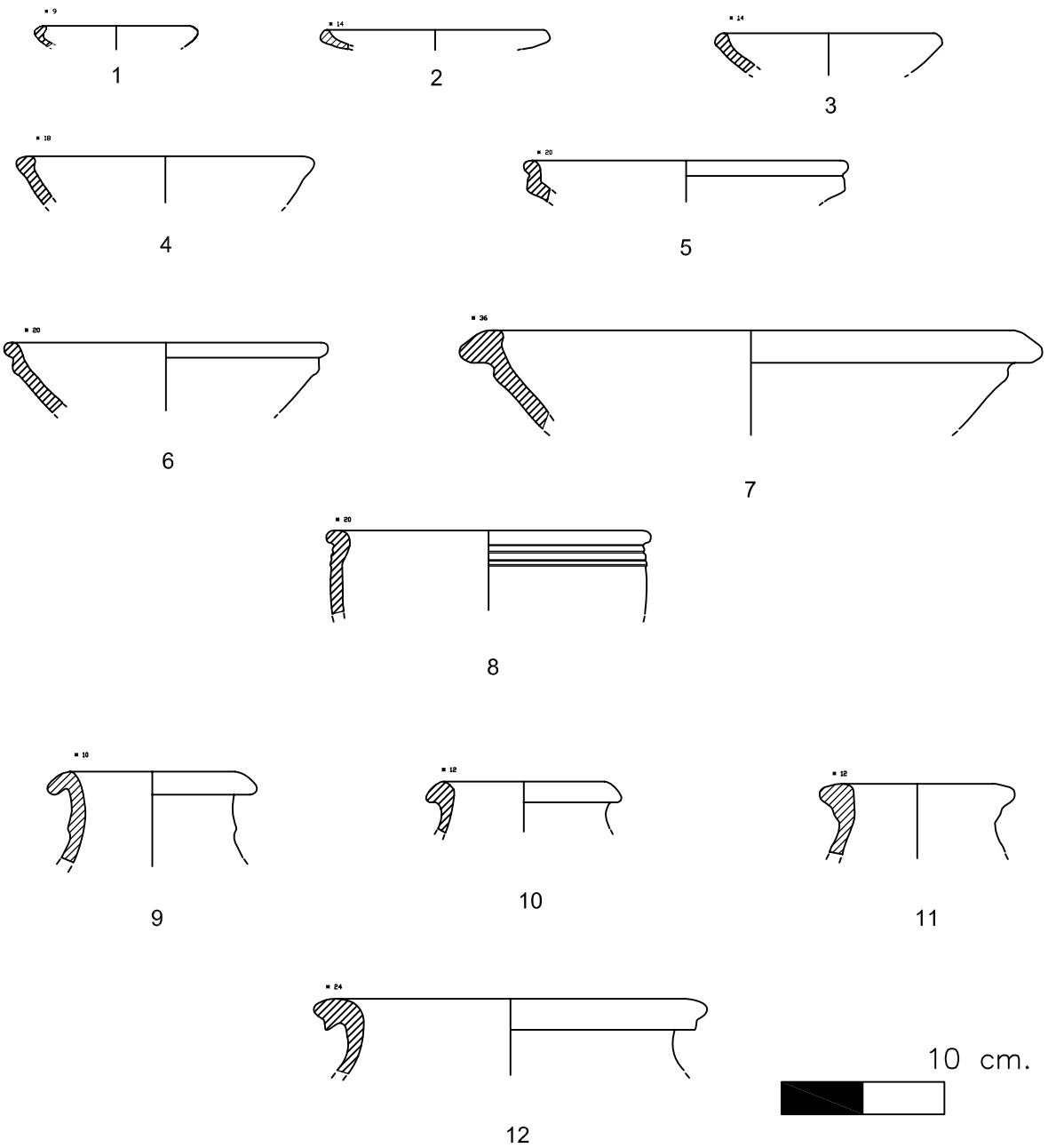

Fig. 12 Late MBA II and MBA II–LBA I transitional ceramic diagnostics from the foundation trenches of the Royal Palace

Among the jars very characteristic are the ridged and narrow necked jars with down-turned triangular rim (Fig. 12:9), which are very common in LBA I levels at Nebi Mend, Qitar and Umm al-Marra,[50] the narrow necked jars with upright triangular rim (Fig. 12:10), well documented in contemporary contexts at Nebi Mend and Umm al-Marra,[51] and the necked jars with expanded rim (Fig. 12:11) that during the LBA I are preferred to the double rim jars of MBA tradition,[52] which, however, continue to be produced in this period also at Hadidi and Afis (Fig. 12:12).[53]

Ceramic diagnostics of the type described above were also discovered in the foundation

[50] Bourke 1993, 185, fig. 22:3, 5; McClellan 1986, 98, fig. 9:2; Tefnin 1983, 151, fig. 4:4.

[51] Bourke 1993, 185, fig. 22:11; Tefnin 1983, 151, fig. 4:11.

[52] See Afis, Area E1, level 14; Mazzoni 1998, 37, fig. 26:17.

[53] Dornemann 1981, 45, fig. 15:14; Mazzoni 1998, 37, fig. 26:19–20.

trench of the northern throne room wall, within a context sealed by the room's thick mortar floor – i.e. in the ceremonial wing which was the actual core of the Royal Palace and cannot have been added to the complex in a later stage. Moreover, these pottery types are attested in over 50% of the excavated foundation trenches and some of them were incorporated in the levelling layers of small-sized stones, which were identified during the 2006 excavation campaign in the brickwork of the northern section of the eastern palace wall foundation.

The above-discussed diagnostics, which have been recovered also by the Syrian team from the foundation trenches of the southern part of the throne room,[54] provide us with a clear *terminus ante quem non* for the construction of the Royal Palace.

3. Finally, the clay sealings with impressions of cylinder seals carved in a fine Classical Old Syrian style discussed by Novák were not recovered from strictly *in situ* contexts, but mainly from foundation trench fills, or from elsewhere in the palace foundation system or the debris of collapsed rooms.[55]

During the 2005 excavation campaign, an important find was made in the fill of the southern foundation trench of Room T, in the eastern wing of the Royal Palace: 74 fragments of clay sealings – mainly door sealings – were recovered.[56] All sealings bore fine Classical Old Syrian cylinder seal impressions with figurative decorations.

Among them one group is particularly interesting. It is a collection of nine fragments of clay door sealings – to which a further incomplete sealing recovered in 2002 from a different context in Operation H may be added – bearing the impression of the same royal cylinder seal with a guilloche pattern and cuneiform legend (Fig. 13a–b). The inscription indicates that our sealing fragments were rolled with a seal belonging to Ishhi-Addu, the first known king of Qatna. The sealings represent, therefore, the first royal inscription found at Qatna and the first epigraphic document mentioning Ishhi-Addu found outside Mari – specifically at Qatna itself.

Apart from the obvious relevance that these and other sealings excavated by the Italian and German teams in the foundations of Qatna's Royal Palace have in relation to the definition of the Classical Old Syrian glyptics from Qatna,[57] after the first attempt on the part of Adelheid Otto to define a Qatna 'Hofstil',[58] the crucial importance of this

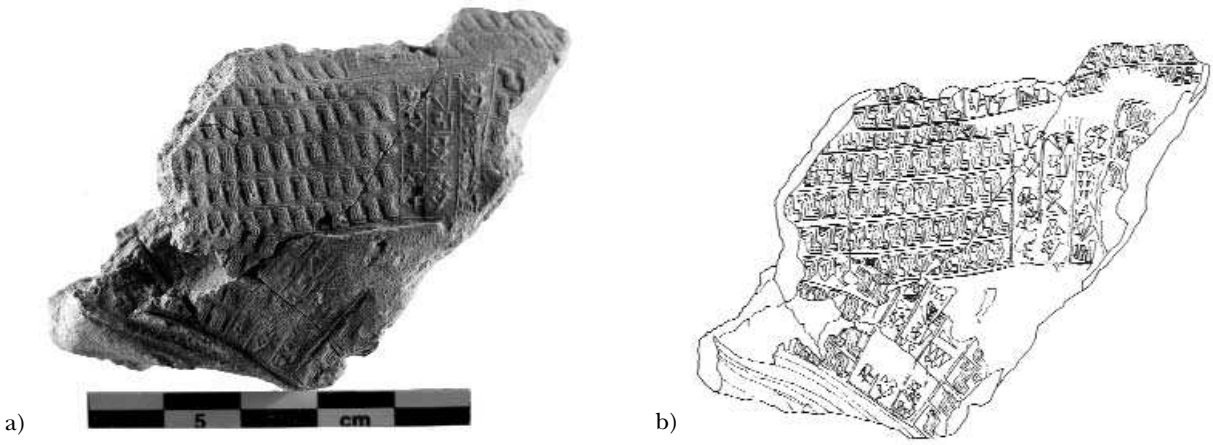

Fig. 13 Photograph (a) and drawing (b; scale 1:1) of one of the clay sealings with impression of Ishhi-Addu's royal seal (photo R. Ercolino, drawing S. Tinazzo)

[54] Al-Maqdissi 2003a, 1510–1513, figs. 19–21.

[55] This issue is extensively discussed by Morandi Bonacossi and Eidem 2006 on the basis of the published evidence from Operations G and H.

[56] Morandi Bonacossi and Eidem 2006.

[57] For a preliminary presentation of the seals and clay sealings found by the German team in Operation G and other Classical Old Syrian clay sealing fragments from Operation H, see Novák and Pfälzner 2001, 185–190; Elsen-Novák 2002; Barro 2003, 87, 92, fig. 15; Novák 2004, 310–311.

[58] Otto 2000, 145–148.

well-dated group of sealings lies in its significance as a chronological indicator for the dating of the construction of Qatna's Royal Palace.

All these sealing fragments, together with others recovered from different parts of Operation H and other material, such as a late XIII Dynasty faience or frit scarab,[59] the stone vessel fragment with the name of the XII Dynasty Pharaoh Sesostris I[60] and a Mari period tablet,[61] were found in secondary contexts, that is in the fills of trenches or in the mud-brick work belonging to the palace foundation system, and were therefore bureaucratic and administrative items which had already been discarded at the time when the palace was built. In other words, they represent secondary refuse disposal, that is exhausted material which had been deliberately redeposited in another location.[62] They are, like the cemetery discussed above, another clear *terminus post quem* for the foundation of the Royal Palace.

All these lines of evidence – stratigraphy, pottery, and glyptics – point to the conclusion that Qatna's Royal Palace can only have been built after the Mari period, roughly during the MB/LB transition, and therefore cannot have been the residence of Ishhi-Addu and Amud-pî-El, kings of Qatna.

A final point which may be significant for our chronological issue regards the two royal statues flanking the entrance to the Royal Hypogeum excavated by the German team under the palace.[63] They show remarkable stylistic and ichonographic similarities to the so-called head of 'Yarim-Lim' of Aleppo from the palace of Alalakh VII, which actually probably represents one of the kings of Alalakh in person.[64]

On the basis of the analysis of the pottery assemblage it is widely agreed that Alalakh VII represents a terminal phase of the MBA II, which can be compared with Hadidi IIC, Ougarit Moyen II–3 and Mardikh III B2.[65] Alalakh VII and Mardikh III B2 were destroyed by the Old Hittite kings Hattushili I and Murshili I respectively.[66] From historical data, it is clear that Hattushili's campaigns date to slightly before Murshili's conquest of Babylon.[67] Using the Middle Chronology, this would place the destruction of Alalakh VII around 1600 or slightly earlier and according to the Low Chronology around 1575 BC.[68] According to the Middle Chronology, therefore, Yarim-Lim's head can be dated to the 17th century BC – probably in the second part of the century – together with the statues from the Royal Hypogeum at Qatna.

As Novák correctly remarks in his article, "these statues mark the foundation of the royal tomb and also of the palace".[69] The royal statues represent another piece of evidence which further supports a foundation of the palace at the earliest during the terminal MBA II or, as the overall archaeological evidence indicates, during the MB/LB transition, long after the Mari period.

This new date for the erection of Qatna's Royal Palace poses, of course, a new question: Where was the royal palace from which Ishhi-Addu and Amud-pî-El sent their letters to Shamshi-Adad, Yasmah-Addu and later Zimri-Lim? Certainly not under the subsequent Royal Palace, since no significant earlier monumental architecture was found under its foundations.

This is an exciting new question which will be addressed by future research in the field.

---

59 Morandi Bonacossi and Eidem 2006, note 10.

60 Roccati 2002.

61 Barro 2003, 86–87; Eidem 2003, 164–165. Barro, however, erroneously refers to the tablet as having been found at the junction between two walls, one of which was added in a later phase (cf. Barro 2003, 87, note 48). A verification of this excavation context carried out in 2005 has proven beyond any doubt that the tablet fragments were incorporated in the mud mortar binding two different mud-brick courses of one and the same wall and not in the junction between an earlier and a later wall as originally supposed.

62 Cameron and Tomka 1996.

63 Novák and Pfälzner 2003, 156–162.

64 Orthmann 1985, fig. 400.

65 Gates 1987 and 2000; Heinz 1992, 188; Nigro 2002, 111; Pinnock 2005, 131, 135.

66 Matthiae 1995, 94. According to the *Epos der Freilassung*, a Hittite-Hurrian bilingual epic text recently discovered at Boghazköy, a Hurrian prince of Ninive allied with Murshili I, Pizzikarra, was materially responsible for the fall of Ebla ordered by the god Teshub (Neu 1996, 20; Pinnock 2005, 136).

67 Kempinski 1997, 328; Beckman 2000; Michel and Rocher 1997–2000; Wilhelm 2004; Pruzinsky 2005 and 2006; Maeir 2006.

68 Gates 1987; Heinz 1992; Maeir 2006.

69 Novák 2004, 311.

Bibliography

AL-MAQDISSI, M.

2003a Recherches archéologiques syriennes à Mishirfeh-Qatna au nord-est de Homs (Émèse), *CRAI*, 1487–1515.

2003b Ergebnisse der siebten und achten syrischen Grabungskampagne 2001 und 2002 in Mishrife-Qatna, *MDOG* 135, 219–245.

AL-MAQDISSI, M., DOHMANN-PFÄLZNER, H., PFÄLZNER, P., SULEIMAN, A.

2003 Das königliche Hypogäum von Qatna, *MDOG* 135, 189–218.

AL-MAQDISSI, M., MORANDI BONACOSSI, D.

2005 *The Metropolis of the Orontes. Art and Archaeology from the Ancient Kingdom of Qatna. Seven Years of Syrian-Italian Collaboration at Mishrifeh/Qatna*, Damascus.

BADRE, L.

1997 Bey 003 Preliminary Report. Excavations of the American University of Beirut Museum 1993–1996, *BAAL* 2, 6–94.

BARRO, A.

2002 Operation H, in: M. AL-MAQDISSI *et al.* (eds.), *Excavating Qatna I. Preliminary Report on the 1999 and 2000 Campaigns of the Joint Syrian-Italian-German Archaeological Research Project at Tell Mishrifeh*, EQ 1, Damascus, 111–122.

2003 Rediscovering "Le Palais": New Data from the Royal Palace of Qatna (Operation H) , 78–96, in: D. MORANDI BONACOSSI *et al.*, Tell Mishrifeh/Qatna 1999–2002. A Preliminary Report of the Italian Component of the Joint Syrian-Italian-German Project, *Akkadica* 124/1.

BECKMAN, G.

2000 Hittite Chronology, *Akkadica* 119–120, 19–32.

BONECHI, M.

1997 II Millennium Ebla Kings, *RA* 91, 33–38.

BOURKE, S. J.

1993 The Transition from the Middle to the Late Bronze Age in Syria: The evidence from Tell Nebi Mend, *Levant* 25, 155–195.

BUNIMOVITZ, S.

1992 The Middle Bronze Age Fortifications in Palestine as a Social Phenomenon, *Tel Aviv* 19, 221–234.

CAMERON, C.M., TOMKA, S.A. (eds.)

1996 *Abandonment of Settlements and Regions. Ethnoarchaeological and Archaeological Approaches*, Cambridge.

CREMASCHI, M.

2007 The Lake of Qatna: A Geoarchaeological Study of the Bronze Age Capital, in: D. MORANDI BONACOSSI (ed.), *Proceedings of the International Conference "Urban and Natural Landscapes of an Ancient Syrian Capital. Settlement and Environment at Tell Mishrifeh/Qatna and in Central-Western Syria", Udine, 9–11 December 2004*, Udine.

CREMASCHI, M., MORANDI BONACOSSI, D., VALSECCHI, V.

in press Settlement and Environment at Tell Mishrifeh/Qatna and Its Region. A Preliminary Reconstruction, in: R. EICHMANN, H. KÜHNE, B. SALJE (eds.), *Proceedings of the 4th International Congress on the Archaeology of the Ancient Near East*, Berlin.

CULICAN, W., MCCLELLAN, TH.L.

1984 El-Qitar: First Season of Excavation, *Abr-Nahrain* 22, 29–63.

DARDAILLON, E.

2000 Quelques remarques sur le complexe palatial de Qatna, *Syria* 77, 69–94.

DE FEYTER, T.

1989 The Aussenstadt settlement of Munbaqa, Syria, in: O. HAEX (ed.), *To the Euphrates and Beyond, FS M.N. van Loon*, Rotterdam, 237–256.

DORNEMANN, R.H.

1981 The Late Bronze Age Pottery Tradition at Tell Hadidi, Syria, *BASOR* 241, 29–47.

1992 Early Second Millennium Ceramic Parallels between Tell Hadidi-Azu and Mari, 77–112, in: G.D. YOUNG (ed.), *Mari in Retrospect. Fifty Years of Mari and Mari Studies*, Winona Lake.

DU MESNIL DU BUISSON, R.

1927 Les ruines d'el-Mishrifé au Nord-Est de Homs (Émèse), *Syria* 8, 13–33.

1928a L'ancienne Qatna ou les ruines d'el-Mishrifé au N.-E. de Homs (Émèse). Deuxième campagne de fouilles (1927), 2e article, *Syria* 9, 6–24.

1928b L'ancienne Qatna ou les ruines d'el-Mishrifé au N.-E. de Homs (Émèse). Deuxième campagne de fouilles (1927), 3e article, *Syria* 9, 81–89.

1930 Compte rendu de la quatrième campagne de fouilles a Mishrifé-Qatna, *Syria* 11, 146–163.

1935 *Le site archéologique de Mishrifé-Qatna*, Paris.

DUSSAUD, R.

1928 Observations sur la céramique du IIe millénaire avant notre ère, *Syria* 9, 131–150.

EIDEM, J.

2003 The Cuneiform Tablets, *Akkadica* 124, 164–167.

ELSEN-NOVÁK, G.

2002 Die altsyrische Glyptik aus Qatna. Eine erste Einordnung, *MDOG* 134, 257–274.

FINKBEINER, U. *et alii*

2001 Emar 1999. Bericht über die 3. Kampagne der syrisch-deutschen Ausgrabungen, *BaM* 32, 41–144.

FINKELSTEIN, I.

1992 The Middle Bronze Age 'Fortifications': A Reflection of Social Organization and Political Formation, *Tel Aviv* 19, 201–220.

FUGMANN, E.

1958 *Hama. Fouilles et recherches de la Fondation Carlsberg 1931–1938, II. L'architecture des périodes pré-hellénistiques*, Copenhague.

GATES, M.H.

1987 Alalakh and Chronology Again, 60–86, in: P. ÅSTRÖM (ed.), *High, Middle or Low? Acts of an International Colloquium on Absolute Chronology Held at the University of Gothenborg 20th–22nd August 1987*, Gothenburg.

2000 Kinet Höyük (Hatay, Turkey) and MB Levantine Chronology, *Akkadica* 119–120, 77–101.

HEINZ, M.

1992 *Tell Atchana/Alalakh. Die Schichten VII–XVII*, AOAT 41, Neukirchen-Vluyn.

IAMONI, M.

2007 *Transition or Shift? The LBA in Central Western Syria and its Possible Genesis in the MBA from the Perspective of Qatna*, unpublished PhD dissertation, Faculty of Oriental Studies, University of Cambridge.

ILAN, D.

1998 The Dawn of Internationalism. The Middle Bronze Age, 297–319, in: TH.E. LEVY (ed.), *The Archaeology of Society in the Holy Land*, London and Washington.

KEMPINSKI, A.

1997 The Hyksos: A View from Northern Canaan and Syria, 327–334, in: E.D. OREN (ed.), *The Hyksos: New Historical and Archaeological Perspectives*, Philadelphia.

KÜHNE, C.

1998 Meki, Megum und Mekum/Mekim, 311–322, in: S. ISREᶜEL *et al.* (eds.), *Past Links. Studies in the Languages and Cultures of the Ancient Near East*, Winona Lake.

LUCIANI, M.

2003 The Lower City of Qatna in the Late Bronze and Iron Ages: Operation K, 144–163, in: D. MORANDI BONACOSSI *et al.*, Tell Mishrifeh/Qatna 1999–2002. A Preliminary Report of the Italian Component of the Joint Syrian-Italian-German Project, *Akkadica* 124/2.

MAEIR, A.M.

2006 Is the Middle Chronology Dead? (Or are they all?), Lecture given at the Middle Bronze Age Study Group Meeting, *www.biu.ac.il/JS/le/mb/ABSTRACTS.htm*

MARCHETTI, N.

2006 Middle Bronze Age Public Architecture at Tilmen Höyük and the Architectural Tradition of Old Syrian Palaces, 275–308, in: F. BAFFI *et al.* (eds.), *Ina Kibrat Erbetti. Studi di Archeologia orientale dedicati a Paolo Matthiae*, Roma.

MARGUERON, J.-C.

1979 Un "*khilani*" à Emar?, *AASOR* 44, 153–176.

MATTHIAE, P.

1995 Fasi storiche e cronologia archeologica, 86–95, in: P. MATTHIAE, F. PINNOCK, G. SCANDONE MATTHIAE (eds.), *Ebla. Alle origini della civiltà urbana*, Milano.

1997 Tell Mardikh, 1977–1996: Vingt ans de fouilles et de découvertes. La renaissance d'Ebla amorrheenne, *Akkadica* 101, 1–29.

MCCLELLAN, TH.L.

1984–85 El-Qitar: Second Season of Excavations, 1983–1984, *Abr-Nahrain* 23, 39–72.

1986 El-Qitar: Third Season of Excavations, 1984–1985, *Abr-Nahrain* 24, 83–106.

MICHEL, C., ROCHER, P.

1997–2000 La chronologie du début du IIe millénaire revue à l'ombre d'une éclipse de soleil, *JEOL* 35–36, 1997–2000, 111–126.

MIGLUS, P.

2004 Palast. B. Archäologisch, *RlA* 10/3–4, 233–276.

MORANDI BONACOSSI, D.

2007 Tell Mishrifeh and its Region During The EBA IV and the EBA–MBA Transition. A First Assessment, in: P. PARR (ed.), *The Levant in Transition – the Intermediate Early Bronze Age*, London.

in press a Large-scale Pottery Production at Middle Bronze Age Qatna, in: J.-C. MARGUERON, P. de MIROSCHEDJI, J.-P. THALMANN (eds.), *Proceedings of the Third International Conference on the Archaeology of the Ancient Near East*, Paris.

in press b The Acropolis of Tell Mishrifeh During the Second and First Millennia BC. Preliminary Results of the Work of the Italian Component of the Syrian-Italian-German Project at Tell Mishrifeh/Qatna, in: R. EICHMANN, H. KÜHNE, B. SALJE, (eds.), *Proceedings of the 4th International Congress on the Archaeology of the Ancient Near East*, Berlin.

MORANDI BONACOSSI, D., EIDEM, J.

2006 A Royal Seal of Ishhi Addu, King of Qatna, *Akkadica* 127/1, 2006, 1–17.

NEU, V.E.

1996 *Das hurritische Epos der Freilassung, I. Untersuchungen zu einem hurritisch-hethitischen Textensemble aus Hattusha*, Wiesbaden.

NIGRO, L.

2002 The Middle Bronze Age Pottery Horizon of Northern Inner Syria on the Basis of the Stratified Assemblages of Tell Mardikh and Hama, 97–128, in: M. AL-MAQDISSI, V. MATOÏAN, and CH. NICOLLE (eds.), *Céramique de l'Âge du Bronze en Syrie, I*, Beyrouth.

NOVÁK, M.

2004 The Chronology of the Royal Palace of Qatna, *Ä&L* 14, 299–317.

NOVÁK, M., PFÄLZNER, P.,

2001 Ausgrabungen in Tall Mišrife / Qatna 2000. Vor-

bericht der deutschen Komponente des internationalen Projektes, *MDOG* 133, 157–198.

2002 Ausgrabungen in Tall Mišrife / Qatna 2001. Vorbericht der deutschen Komponente des internationalen Projektes, *MDOG* 134, 207–246.

2003 Ausgrabungen im bronzezeitlichen Palast von Tall Mišrife / Qatna 2002. Vorbericht der deutschen Komponente des internationalen Kooperationsprojektes, *MDOG* 135, 131–145.

ORTHMANN, W.

1985 *Der alte Orient*, Berlin.

OTTO, A.

2000 *Die Entstehung und Entwicklung der Klassisch-Syrischen Glyptik*, Berlin-New York.

PHILIP, G.

2007 Natural and Cultural Aspects of the Development of the Marl Landscape East of Lake Qatina During the Bronze and Iron Ages, in: D. MORANDI BONACOSSI (ed.), *Proceedings of the International Conference "Urban and Natural Landscapes of an Ancient Syrian Capital. Settlement and Environment at Tell Mishrifeh/Qatna and in Central-Western Syria", Udine, 9–11 December 2004*, Udine.

PINNOCK, F.

2005 *La ceramica del Palazzo Settentrionale del Bronzo Medio II*, Materiali e Studi Archeologici di Ebla VI, Roma.

PREUSSER, C.

1955 *Die Paläste in Assur*, WVDOG 66, Berlin.

PRUZINSKY, R.

2005 Ein bibliographischer Wegweiser zur absoluten mesopotamischen Chronologie des 2. Jts. v. Chr., *Ä&L* 15, 181–202.

2006 Šamši-Adads I. „neue" Regierungsdaten und assyrische Distanzangaben, 73–79, in: E. CZERNY, I. HEIN, H. HUNGER, D. MELMAN, A. SCHWAB (eds.), *Timelines. Studies in Honour of Manfred Bietak*, OLA 149.3, Leuven.

ROCCATI, A.

2002 A Stone Fragment Inscribed with Names of Sesotris I Discovered at Qatna, 173–174, in: M. AL-MAQDISSI, M. LUCIANI, D. MORANDI BONACOSSI, M. NOVÁK, P. PFÄLZNER (eds.), *Excavating Qatna, I. Preliminary Report on the 1999 and 2000 Campaigns of the Joint Syrian-Italian-German Archaeological Research Project at Tell Mishrifeh*, Damascus.

SCHNEIDER, TH.

2002 Sinuhes Notiz über die Könige. Syrisch-anatolische Herrschertitel in ägyptischer Überlieferung, *Ä&L* 12, 257–272.

STARR, R.F.S.

1937 *Nuzi. Report on the Excavations at Yorgan Tepe Near Kirkuk, Iraq, 1927–1931*, Cambridge Mass.

TEFNIN, R.

1983 Aperçu sur neuf campagnes de fouilles belges aux Tell Abu Danne et Oumm el-Marra (1975–1983), *AAAS* 33/2, 141–152.

TONIETTI, M.V.

1997 Le cas de Mekum: continuité ou innovation dans la tradition éblaite entre III^{è} et II^{è} millénaires?, *M.A.R.I.* 8, 225–242.

VENTURI, F.

1998 The Late Bronze II and Early Iron I Levels, in: S.M. Cecchini, S. Mazzoni (eds.), *Tell Afis (Siria). Scavi sull'acropoli 1988–1992*, Pisa, 123–162.

WILHELM, G.

2004 Generation Count in Hittite Chronology, 71–79, in: H. HUNGER and R. PRUZSINSZKY (eds.), *Mesopotamian Dark Age Revisited. Proceedings of an International Conference of SCIEM 2000, Vienna 8th–9th November 2002*, Wien.

WOOLLEY, C.L.

1955 *Alalakh. An Account of the Excavations at Tell Atchana in the Hatay, 1937–1949*, London.